Report No: MIT-GFR-037

Topical Report

Applicability of Supercritical CO_2 Power Conversion Systems to GEN IV Reactors

Authors:

J.P. Gibbs
P. Hejzlar
M.J. Driscoll

September 15, 2006

Center for Advanced Nuclear Energy Systems
MIT Department of Nuclear Science and Engineering

Project PI
Professor M. J. Driscoll
MIT Dept. of Nuclear Science and Engineering
77 Massachusetts Avenue
Bldg. 24-215
Cambridge, MA 02139
(617) 253-4219
Email: mickeyd@mit.edu

Contract Technical Monitor
Dr. Paul S. Pickard
Manager, Advanced Nuclear Concepts Dept.
Sandia National Laboratories
PO Box 5800, MS 1136
Albuquerque, NM 87185-1136
(505) 845-3046
Email: pspicka@sandia.gov

Abstract

Third generation plant layouts and performance attributes are developed for the supercritical CO_2 power conversion system for use with GEN IV reactors, covering a range of ratings between 20 and 1200 MWe.

The indirect cycle designs are characterized by a dispersed component layout in which a single shaft turbomachinery train is coupled to parallel arrays of multiple printed circuit heat exchanger modules. This configuration has considerable benefits in terms of modularity, inspectability, repairability and replaceability. Compared to our prior second generation dispersed layouts, its lower ductwork pressure drop confers on the order of 3% higher thermal efficiency.

Acknowledgements

The work reported here is a deliverable under contract to Sandia as part of the current project "Supercritical CO_2 Cycle Control System Simulation and Plant Design Studies" and its precursor "Qualification of the Supercritical CO_2 Power Conversion Cycle for Advanced Reactor Applications."

We have benefited greatly from the prior efforts in this area by V. Dostal and P. Stahle on the first and second generation PCS layouts, upon which this third generation work builds.

Dr. Yifang Gong of the MIT Gas Turbine Laboratory in the MIT Aeronautics and Astronautics Department was of inestimable help in fleshing out the turbomachinery design attributes. David Legault's concurrent work on upgrading of the CYCLES II PCS thermodynamics/hydraulics program was also helpful.

Table of Contents

Abstract i
Acknowledgements ii
Table of Contents iii
List of Figures v
List of Tables vi
Chapter 1 Introduction 1
1.1 Scope of This Report 1
1.2 Applicability to GEN-IV and Other Advanced Reactors 2
1.3 Criteria and Constraints 6
1.4 Organization of This Report 8
1.5 References for Chapter 1 9
Chapter 2 Basic Design Choices 10
2.1 Introduction 10
2.2 Design Evolution 12
2.3 Concluding Remarks 16
2.4 References for Chapter 2 17
Chapter 3 Third Generation Plant Layouts 18
3.1 Introduction 18
3.2 Arrangements (Solid Edge) 21
3.2.1 Starting Point – Second Generation PCS 21
3.2.2 Third Generation Cycle Layouts 25
3.3 Heat Exchanger Arrangement 27
3.4 Third Generation Layout – 300MWe 30
3.4.1 Component Mass Estimates for 300 MWe PCS 39
3.5 Third Generation Layout - 150MWe Layout 41
3.5.1 Piping Loss Breakdown for 150MWe PCS Train 44
3.5.2 Component Mass Estimates for 150 MWe PCS 46
3.6 Third Generation Layout - 50MWe 48
3.6.1 Component Mass Estimates for 50 MWe PCS 51
3.7 Third Generation Layout - 20-25MWe 53
3.7.1 Component Mass Estimates for a 20MWe PCS train 58
3.8 Comparing the high and low power ratings 59
3.9 Attaching the intermediate heat exchanger 60
3.10 Extending to high reactor power ratings 66
3.11 Summary and Conclusions 74
3.12 References for Chapter 3 75
Chapter 4 Beyond GEN-IV: Fusion Power Applications 76
4.1 Introduction 76
4.2 Background 76
4.3 Coupling to Power Conversion System 77
4.4 Summary and Conclusions 78
4.5 References for Chapter 4 79

Chapter 5 Summary, Conclusions and Recommendations 80
5.1 Summary and Conclusions 80
5.2 Recommendations for Future Work..... 80
5.3 References for Chapter 5 82
Appendix A S-CO_2 PCS Comparison to Rankine Cycle Components 83
References for Appendix A 89

List of Figures

Fig. 2.1 Dostal's Original Integral PCS Arrangement (2-1) 13
Fig. 2.2 Main Components of GT-MHR 14
Fig. 2.3 Second Generation, Dispersed Layout 15
Fig. 2.4 Third Generation 300 MWe S-CO_2 Layout 16
Fig. 3.1 Second Generation Layout for 300 MWe PCS Isometric View 21
Fig. 3.2 Second Generation Layout for 300 MWe PCS Top View 22
Fig. 3.3 Second Generation Layout for 300 MWe PCS Side View 22
Fig. 3.4 Cross section depiction of heat exchanger vessel for second generation layout 23
Fig. 3.5 Heat exchanger vessel for second generation layout (dimensions shown for a 150MWe HTR vessel) 25
Fig. 3.6 Cutout view of PCHE 28
Fig. 3.7 Increasing the HP plena volume of the PCHE 29
Fig. 3.8 Typical cycle components 35
Fig. 3.9 300 MWe PCS layout (isometric view) 36
Fig. 3.10 300MWe PCS layout (top view) 37
Fig. 3.11 300MWe S-CO_2 power conversion system, side view 38
Fig. 3.12 150MWe single train S-CO_2 power conversion system, isometric view 41
Fig. 3.13 150MWe S-CO_2 power conversion layout, top view 42
Fig. 3.14 150MWe S-CO_2 power conversion layout with generator, side view 43
Fig. 3.15 50MWe PCS, isometric view 48
Fig. 3.16 50MWe PCS, side view 49
Fig. 3.17 50MWe PCS, side view 50
Fig. 3.18 20MWe PCS with PM generator (isometric view) 54
Fig. 3.19 20MWe PCS (top view) 55
Fig. 3.20 20MWe PCS with PM generator (side view), LTR removed to allow nested components to be visible 55
Fig. 3.21 20MWe PCS with permanent magnet generator (side view) 56
Fig. 3.22 Permanent magnet vs. conventional generator comparison 57
Fig. 3.23 150MWe IHX (isometric view) 63
Fig. 3.24 150MWe IHX (side view) 63
Fig. 3.25 300MWe PCS with IHX and generator with two 150MWe IHX assemblies .. 64
Fig. 3.26 300MWe PCS with IHX (side view) 64
Fig. 3.27 50MWe PCS with IHX (isometric view) 65
Fig. 3.28 20MWe PCS with IHX and permanent magnet generator (isometric view) 65
Fig. 3.29 20MWe PCS with IHX and permanent magnet generator (side view) 66
Fig. 3.30 Four 300MWe loops connected to one 1200MWe reactor 67
Fig. 3.31 Four 300MWe PCS loops connected to one 1200MWe reactor (top view) 68
Fig. 3.32 2x600MWe PCS layout isometric view 69
Fig. 3.33 2x600MWe PCS layout top view 70
Fig. 3.34 600MWe (net) turbine for two 300MWe PCS loops on one shaft (side view) 71
Fig. 3.35 600MWe (net) turbine for two 300MWe PCS loops on one shaft (top view).. 71
Fig. 3.36 Cartoon depiction of an over-under 1200MWe turbomachinery train layout for a horizontal arrangement (end-on view) 72

Fig. 3.37 Cartoon depiction of a 1200MWe turbomachinery train layout for a vertical arrangement (top view) 73
Fig. 4.1 Schematic Showing Coupling of Fusion Reactor to Power Conversion System 77
Fig. A.1 IHX vs. Steam Generator Size Comparison (Front View) 84
Fig. A.2 IHX vs. Steam Generator Size Comparison (Top View) 84
Fig. A.3 Turbomachinery Volume Comparison between S-CO_2 PCS Turbomachines and the LP Turbine Plus Steam Chest from a Rankine Cycle for a 300 MWe Rating 85
Fig. A.4 Volume Comparison of the Precooler Units from the S-CO_2 PCS with the Main Condenser from a Rankine Cycle for a 300 MWe Rating (Side View) 86
Fig. A.5 Volume Comparison of the Precooler Units from the S-CO_2 PCS with the Main Condenser from a Rankine Cycle for a 300 MWe Rating 86
Fig. A.6 Volume Comparison of the Recuperators from the S-CO_2 PCS with the Feedwater Heaters from a Rankine Cycle for a 300 MWe Rating (Front View) 87
Fig. A.7 Volume Comparison of the Recuperators from the S-CO2 PCS with the Feedwater Heaters from a Rankine Cycle for a 300 MWe Rating (Side View with Components Rearranged) 88

List of Tables

Table 1.1 Summary of Small Modular Reactor Designs and Concepts (from Ref 1-9) .. 2
Table 1.2 Representative Contemporary Closed Brayton Cycle Gas Turbine Plant Layouts 3
Table 1.3 Representative Contemporary Plants of Larger Ratings 4
Table 1.4 Applicability of S-CO2 Indirect Cycle to GEN-IV Reactors 5
Table 2.1 Standard PCS Ratings Designated for Layout Development 10
Table 3.1 Suggested distributed layout arrangements 20
Table 3.2 Pertinent data for cycle performance calculations 33
Table 3.3 Key to figures 34
Table 3.4a Heat exchanger (PCS) mass estimates for 300MWe PCS 39
Table 3.4b Intermediate heat exchanger mass estimate for 300MWe PCS 39
Table 3.4c Turbomachinery mass estimate for 300MWe PCS 39
Table 3.4d Pipe and valve mass estimate for 300MWe PCS 40
Table 3.5a Itemized piping pressure loss for 150MWe PCS train 44
Table 3.5b Itemized heat exchanger pressure losses for 150MWe PCS train 45
Table 3.6a Heat exchanger mass estimate for 150MWe PCS train 46
Table 3.6b IHX mass estimate for 150MWe PCS train 46
Table 3.6c Turbomachinery mass estimate for 150MWe PCS train 46
Table 3.6d Pipe and valve mass estimate for 150MWe PCS train 47
Table 3.7a Heat exchanger mass estimate for 50MWe PCS train 51
Table 3.7b IHX mass estimate for 50MWe PCS train 51
Table 3.7c Turbomachinery mass estimate for 50MWe PCS train 51
Table 3.7d Pipe and valve mass estimate for 50MWe PCS train 52
Table 3.8a Heat exchanger (PCS) mass estimate for 20MWe PCS train 58
Table 3.8b IHX mass estimate for 20MWe PCS train 58
Table 3.8c Turbomachinery mass estimate for 20MWe PCS train 58

Table 3.8d Pipe and valve mass estimate for 20MWe PCS train 59
Table 3.9 Summary of layout weights 74
Table 4.1 Survey of Representative Blanket Concepts..... 76
Table A.1 Russian VVER 440/213 Specifications 83

Chapter 1 Introduction

1.1 Scope of This Report

The main objective of the work reported here was to assess the applicability of the supercritical CO_2 (S-CO_2) Brayton power conversion system (PCS) to GEN-IV reactors. A range of applications between 20/25 MWe and 1200 MWe is considered in view of the open question as to future customer requirements. For example, small "battery-type" reactors may prove attractive to developing-nation consumers having an underdeveloped electric transmission grid, for remote sites such as in Alaska, and/or to developed-nation suppliers wishing to configure a workable non-proliferation regime. The low-end range of potential ratings (≤50 MWe) is supported by the survey of projects summarized in Table 1.1. As regards the need to consider intermediate range units, Table 1.2 summarizes current Brayton cycle studies, which range up to 300 MWe; and Table 1.3 documents the conventional interest in larger ratings.

The evaluation is limited to use of the recompression-type S-CO_2 PCS based on the extensive evaluation of alternatives by Dostal (1-1), who built upon the earlier work by Angelino (1-2). For example, versions in which CO_2 is condensed into the liquid phase are excluded because most sites worldwide cannot provide sufficiently cool ambient heat sink water or air on an annual-average basis. The recompression cycle is otherwise the simplest which confers high efficiency at moderate turbine inlet temperature (e.g. 45% @ 550°C).

Table 1.1 Summary of Small Modular Reactor Designs and Concepts (from Ref 1-9)

		CAREM	ENHS	IRIS-50	KLT-40	MRX	MSBWR	RS-MHR	TPS	4S
Designer		CNEA	UCB	W	OKBM	JAERI	GE/ Purdue U.	GA	GA	CRIEPI
Type		Integral PWR	LMR	Integral PWR	PWR	Integral PWR	BWR	HTGR	PWR	LMR
Rating		25 MWe	50 MWe	50 MWe	35 MWe	30 MWe	50 MWe	10 MWe	16.4 MWe	50 MWe
Primary system pressure		12.3 MPa	N/A	-	13 MPa	12 MPa	-	-	3 MPa	N/A
Reactor vessel	Height	11 m	19.6 m	14-16 m	3.9 m	9.4 m	8.5 m	8 m	11.6 m	23 m
	Diameter	3.1 m	3.2 m	3.5 m	2.2 m	3.7 m	3.5 m	3.4 m	2.8 m	2.5 m
Reactor core	Height	1.4 m	1.25 m	1.8 m	0.95 m	1.4 m	1.9 m	3.6 m	1 m	4 m
	Diameter	1.3 m	2 m	1.5 m	1.2 m	1.5 m	3.1 m	3 m	1 m	0.8 m
Avg. power density*		55 kW/l	6 kW/m	13 kW/m	155 kW/l	42 kW/l	8.3 kW/m	4 kW/l	95 kW/l	61 kW/l
Fuel/type		UO_2 pins	U-Zr metal	UO_2 pins	U-Al alloy	UO_2 pins	UO_2 pins	UO_2 particles	UZrH pins	U-Zr metal
Fuel enrichment		3.4 %	13 %	4.95 %	-	4.3%	5 %	19.9%	19.9%	~15 %
Refueling frequency (percent replaced)		~ 1 year (50%)	15 years (100 %)	5-9 years	2-3 years (100%)	~ 4 years (50%)	10 years	6-8 years	1.5 years (50%)	10 years (100%)
Coolant flow rate		410 kg/s	0.51 m/s	-	722 kg/s	1250 kg/s	620 kg/s	-	419 kg/s	633 kg/s
Core inlet temperature		284 °C	400 °C	-	278 °C	283 °C	279 °C	500 °C	182 °C	355 °C
Core outlet temperature		326 °C	550 °C	-	318 °C	298 °C	14.3% quality†	850 °C	216 °C	510 °C

* the amount of power generated in a given volume of the reactor core kW per liter, or power in a given length kW per meter
† BWRs measure performance in terms of steam quality (percent by weight of vapor versus liquid) at the core outlet
"-"= Not Provided
N/A = Not Applicable

Source: DOE

1.2 Applicability to GEN-IV and Other Advanced Reactors

Employed as an indirect cycle, the SCO_2 PCS can be adapted to a wide variety of reactor types. Table 1.2 lists a representative set of GEN-IV candidates.

Table 1.2 Representative Contemporary Closed Brayton Cycle Gas Turbine Plant Layouts

Concept	**Arrangement / Layout**
GTHTR 300 (JAERI)	• Turbine / compressor / generator encapsulated in horizontal pressure vessel • Recuperator / precooler encapsulated in separate vertical pressure vessel • Direct cycle 300 MWe
ESKOM PBMR (South Africa)	Vertical heat exchanger vessels, connected by ducts; generator outside horizontal turbomachinery train; direct cycle 175 MWe
GTMHR (US/GA, Russia)	Vertical Pressure Vessel enclosing Turbine / HP & LP compressors in central cylinder, precooler/intercooler/recuperator in surrounding annulus; generator in vessel extension (see Fig. 2.2) Direct Cycle 285 MWe
MIT PBMR	Fully dispersed among a total of 21 railcar/truck-shippable modules: e.g. six recuperator modules Indirect cycle 115 MWe
MIT/INL LDRD	Single vertical PCU vessel housing all S-CO_2 components, with generator outside vessel Direct cycle, Fast Reactor 250 MWe
CEA	Study of dispersed He and S-CO_2 PCS Indirect Cycles for GFR; He primary coolant. Single shaft horizontal turbomachinery: 300 MWe
NGNP	Both integrated and non-integrated Direct Cycle versions under consideration; GTMHR used for INL Point Design studies
Framatome	Indirect Cycle, N_2/He working fluid, Rankine bottoming cycle 300 MWe
INL	CO_2 power cycle which approaches the critical pressure (7.38 MPa) from below. Indirect Cycle 125 MWe He, N_2/He, CO_2 300 MWe
ANL	S-CO_2 power cycle very similar to the MIT version; Indirect Cycle Star LM @ 180 MWe
Tokyo Tech	Another CO_2 power cycle which approaches the critical pressure from below; Direct Cycle; more recently S-CO_2 similar to MIT 300 MWe
ORNL	Indirect cycle: liquid salt cooled core coupled to a helium PCS which employs multi-reheat, AHTR, He 300-1000 MWe
UCB	NGNP: He, N_2/He 300-1000 MWe, multi-reheat

Note: Designs are evolving and hence specifications change over time.

Table 1.3 Representative Contemporary Plants of Larger Ratings (from Ref 1-10)

Types	Rating (MWe)
Operating units worldwide (avg)	
PWR	907
BWR	904
GCR	485
HWR	525
LGR	713
LMFBR	397
GEN III+	
ESBWR	1550
AP-1000	1000
EPR	1600
ABWR	1315
APWR (MHI)	1700
KSNP+ (Korea)	1000
APR-1400 (Korea)	1400
VBER-300 (Russia)	325
VVLR+ (Russia)	640, 1000, 1500
ACR (Canada)	700

Table 1.4 Applicability of S-CO_2 Indirect Cycle to GEN-IV Reactors

Concept	Reactor Outlet T[1]	S-CO_2 Turbine Inlet T[3]	Est. S-CO_2 Cycle Thermal Efficiency[4]
GFR	850°C (He)	800°C	53
LFR	550-800°C	530-780°C	43-52
SFR	550°C	530°C	43
MSR	700-800°C	680-780°C	49-52
SCWR	510-550°C	500°C	42
VHTR	1000°C	800°C[2]	53

Notes:

1. **Nuclear News, Nov. 2002**
2. **Limited by corrosion, and to a lesser extent by dissociation**
3. **IHX ΔT is 50°C for Gas/Gas, 20°C for Liquid/Gas**
1. **For net plant efficiency subtract approx. 4% for Gas/Gas house loads and 2% for Liquid/Gas combinations**

One principal criterion is the achievable turbine inlet temperature, which should be above about 450°C if attractive thermodynamic efficiencies are to be attained. Allowing on the order of 20°C temperature difference across an intermediate heat exchanger, this translates into a coolant core outlet temperature of 470°C or higher. The following rough approximation for S-CO_2 cycle efficiency applies:

$$\eta \approx \eta_c - 0.19 \qquad (1\text{-}1)$$

Where η_c is Carnot cycle efficiency:

$$\eta_c \approx 1 - \frac{Tc}{Th}$$

in which

Tc = ambient waste heat sink temperature (~300°K)
Th = turbine inlet temperature (absolute)

Thus, if mated to a PWR with resulting Th = 300°C (573°K), η would only be about 29%, compared to the 32% attained by today's Rankine cycle PCS. This is too low

to offset any savings provided by reduced system size. Hence the S-CO_2 PCS is not attractive for GEN-III+ LWRs.

At higher temperatures the principal competition for the S-CO_2 PCS is its He Brayton PCS counterpart. Because helium is an ideal gas, it does not benefit from the low compressor work achieved in the S-CO_2 PCS by operating near the critical point of CO_2. Hence at all values of turbine inlet temperature, the He-PCS efficiency is lower.

For example, a curve fit to Dostal's CYCLES code calculations for an idealized, optimized He-PCS gives:

$$\eta = 1.33\,\eta_c - 0.49 \qquad (1\text{-}2)$$

hence about 36% at 550°C, versus 44.6% for a S-CO_2 PCS.

Even lower values are projected if one compares a helium cycle reactor closer to practical realization such as the PBMR; fitting a curve presented in Ref (1-7) yields:

$$\eta = 2.23\,\eta_c - 1.23 \qquad (1\text{-}3)$$

which predicts only 18.8% at 550°C.

Larger efficiencies are possible for multi-reheat helium cycles, but at the expense of increased complexity (1-8).

The interest here is confined to indirect cycle applications. However it is worth noting that direct cycle use is feasible. For example, at MIT a CO_2 cooled GFR is under evaluation (1-3), having a core outlet/turbine inlet temperature of 650°C – building on proven British AGR experience at this temperature. Likewise we limit attention to fission reactors, but note a recent survey (see Chapter 5, this report) which concludes that most fusion reactor concepts should be compatible with use of the S-CO_2 PCS. Finally, electric-generation-only is a further restriction; but again an evaluation (1-4) shows potential applicability for district heating, desalination, and dry cooling tower applications, as well as use as a bottoming cycle for very-high-temperature reactors designed to power thermochemical hydrogen production plants.

1.3 Criteria and Constraints

The plant layouts described subsequently were developed to satisfy a number of practical restrictions. Thus explicit recognition of the criteria and constraints governing key design decisions is essential at the outset, as follows:

(1) Power plant experience with pipes/ducts and valves is primarily with diameters no larger than one meter. This favors keeping S-CO_2 PCS ratings at or below about 150 MWe to avoid excessive pressure drop – especially in low pressure regions

such as the turbine exhaust. This led us to use two or more parallel piping trains for larger ratings. The turbomachinery, on the other hand, is extremely compact, with single-train ratings up to 1200 MWe conceivable. However, more than two parallel circuits per turbomachine leads to increased complexity.

(2) Heat exchanger size limitations reinforce the above design choice. While core power densities of HEATRIC™ type printed circuit heat exchangers (PCHE) are extremely high (e.g. 30 MW/m^3), the need for large plena makes the overall pressure vessel envelope push the limits of fabricability and transportability. Considerable experience with transportation of PWR steam generators and pressure vessels insures that components or modules less than around 800 metric tons, of up to 7 meters diameter and 60 meters in length are manageable. Transportability and modularity are also essential prerequisites to the applicability of factory rather than on-site fabrication, with attendant significant cost reduction.

(3) Grid-synchronous turbomachinery favors rotational speeds of 3600 or 1800 rpm. However higher speeds are necessary for efficient design of small turbomachinery. Recent technological advances (permanent magnet generators, solid state DC-AC inverters/converters) have favored using variable speed in lieu of gearboxes and fixed speed. Applications up to 30 MWe are in the works, and 50 MWe (the breakpoint assumed here) judged attainable by manufacturers' technical representatives.

(4) Turbomachinery scaling also strongly affects the choice between radial (centrifugal) and axial configuration. Reference (1-5) addresses this complex subject in some detail, but the valid generalization can be made that small rating favors adoption of radial machinery. Radial machines can still be used for larger ratings, but with an increased number of stages (to reduce diameter). We have assumed the switchover point to again be at about 50 MWe for the turbine; radial compressors may be required for stability reasons at higher ratings.

(5) Another choice which profoundly affected plant layout was the decision to employ a single-shaft turbomachinery train. A major factor was the increased rotational inertia, desirable for insuring benign response in transients. Elimination of separate motors or turbines to power uncoupled compressors also leads to higher overall cycle efficiency and lower cost. This comes at the expense of reduced flexibility in control and independent optimization of turbomachine rotational speed. Because the S-CO_2 turbomachinery is so compact, and because two compressors are required, it also made it challenging to configure the required interconnections with the much larger heat exchangers, and to accommodate valves – turbine bypass, for example – a task further complicated by the large diameter ductwork needed to avoid excessive pressure drop.

(6) Implicit in all of the above discussion is the use of a dispersed (individual components connected by ducts) rather than an integral arrangement (turbomachinery and heat exchangers bundled into a common pressure vessel).

All current GCR-Brayton cycle designers, whether for He or CO_2 as the working fluid, go with dispersed, with the exception of General Atomics, whose GT-MHR is integral. (However, even they have recently expressed an increased interest in some degree of dispersion [1-6]). A motivating factor in our view is the difficulty of accommodating valves (control, bypass, check, isolation) inside an integral vessel; and the limitation, if conventional steel pressure vessels are used, to even lower power ratings than single-train dispersed units. GA and their Russian partners have also opted for vertical turbomachinery, hence more challenging bearing designs.

(7) Worth noting is a guideline considered, but <u>not</u> adopted: namely a prejudice against single-loop PCS. With the imminent shutdown of the Zorita PWR, all contemporary and planned PWRs have 2-4 loops (BWRs, of course, are, in effect, single loop). Two or more loops are commonly credited with improved safety, startup and reduced-power operability. However, our reference unit ratings (ranging from 20 to 300 MWe) permit specification of two or more loops for all but the smallest case should this course of action be favored in the future.

The above criteria and constraints are not "hard" in the usual sense. All could be relaxed, but only with the investment of significant expenses for research, development and demonstration. It is also relevant to point out that similar considerations apply to Brayton PCS designs using working fluids other than CO_2: for example the leading choice, He, or the He/N_2 mixture of interest in France.

1.4 Organization of This Report

This chapter has outlined the motivation and ground rules for an assessment of supercritical CO_2 (S-CO_2) power conversion system (PCS) use with GEN-IV reactors. In general, applicability appears promising for reactors having outlet temperatures in excess of about 450°C. Below that value the S-CO_2 PCS efficiency is inferior to that of Rankine steam cycles.

Chapter 2 briefly outlines the framework for selection of PCS reference module ratings and characteristics, and how individual PCS modules are paired to achieve larger total plant capabilities.

Chapter 3 is the main contribution to this study. It shows detailed layouts for the principal PCS units, and summarizes key characteristics of interest such as plant footprint, component sizes and weights, pressure drops and efficiencies.

Chapter 4 briefly examines S-CO_2 PCS applicability to fusion power reactors, for which it appears to be almost uniquely well-matched.

Finally, Chapter 5 summarizes key findings and outlines future work of merit identified during the course of the present evaluation.

1.5 References for Chapter 1

(1-1) V. Dostal, M.J. Driscoll, P. Hejzlar, "A Supercritical Carbon Dioxide Cycle for Next Generation Nuclear Reactors," MIT-ANP-TR-100, March 2004

(1-2) G. Angelino, "Real Gas Effects in Carbon Dioxide Cycles," ASME Paper No. 69-GT-103 (1969)

(1-3) NERI Project No. 05-044, "Optimized, Competitive Supercritical-CO_2 Cycle GFR for Generation IV Service," NERI 2005 Annual Report, DOE/NE-0129

(1-4) S.S. Fernandez et al, "Extended-Scope Applications of the Supercritical CO_2 Power Conversion System," MIT-GFR-039, August 2006

(1-5) Yifang Gong et al, "Analysis of Radial Compressor Options for Supercritical CO_2 Power Conversion Cycles," MIT-GFR-034, June 2006

(1-6) C. Baxi, "Evaluation of Alternate Power Conversion Unit Designs for the GT-MHR," ICONE-14, Miami, July 2006

(1-7) L. Paoletti et al, "Interfacing the Pebble Bed Modular Reactor and the Westinghouse Sulfur Process," Trans. Am. Nucl. Soc., Vol. 92, June 2005

(1-8) P.E. Peterson, "Multiple-Reheat Brayton Cycles for Nuclear Power Conversion with Molten Salt Coolants," *Nucl. Tech.*, Vol. 144, p. 279, Dec. 2003

(1-9) "Study Outlines Reactor Designs That May Be Ready for Deployment by Decade's End," *Nuclear News*, Vol. 44, No. 9, Aug. 2001

(1-10) J. Cleveland, "Advanced Plants for Nuclear Power's Renaissance," *Nuclear Plant Journal*, Vol. 23, No. 5, Sept.-Oct. 2005

Chapter 2 Basic Design Choices

2.1 Introduction

The original work scope suggested a PCS range of 25 to 1000 MWe for this task. This is extended here to 20/25 to 1200 MWe so as to include the 300 MWe reference design which has been the basis for all prior work at MIT and more recent work at MIT for maritime applications. Table 2.1 displays the revised array of standard design modules. The reference designs are now 20, 50, 100, 125, 150, 250 and 300 MWe. As will be seen, however, intermediate or extrapolated ratings are readily interpolated by adding or removing modular PCHE units and scaling turbomachinery accordingly.

Table 2.1 Standard PCS Ratings Designated for Layout Development

Total Rating (MWe)	Turbomachinery (comp/turbine)	PCS Units (loops)	Configuration (number of trains perPCS)
25	radial/radial (V)	1	Single
50	radial/radial (V)	1 or 2x25	Single
100	radial/radial (V)	1 or 4x25 or 2x50	Single
125	radial/axial (C)	1	Single/Dual
150	radial or axial/axial (C)	1 3x50 (or 100 + 50?)	Single/Dual Single
250	radial or axial/axial (C)	1 2x125	Dual Single/Dual
300	radial or axial/axial (C)	1 2x150 Or 3x100	Dual Single/Dual
500	radial or axial/axial (C)	2x250 4x125	Dual Single/Dual
750	radial or axial/axial (C)	3x250	Dual
1000	radial or axial/axial (C)	4x250	Dual
1200	radial or axial/axial (C)	4x300	Dual

(V) = variable speed turbomachinery that will require power electronics to produce constant frequency AC power

(C) = constant speed turbomachinery

Dual = two recuperator trains in parallel per PCS loop; also two IHX ducts to/from PCS per loop; but one turbomachinery train per PCS loop.

Single = one recuperator train per PCS loop with one turbomachinery train.

Below 100MWe the turbomachinery can be chosen to be variable speed to allow for partial load operation with the proper DC/AC conversion. Above 100MWe it may be desirable to use several loops and simply cut them in and out appropriately for lower electricity demands. The several loop option allows the remaining loops to be operated at full power, which is the most efficient mode.

2.2 Design Evolution

The layouts presented subsequently in this report represent the 3rd generation of evolutionary improvements.

The first generation, as proposed by Dostal (2-1), is shown in Fig. 2.1. It is an integral design similar to that selected for the GA/Russian GT-MHR (see Fig. 2.2). The major benefit is the large reduction in pressure drop achieved by elimination of ductwork. Major drawback,s which led us to move to a dispersed component arrangement, are the use of vertical turbomachinery train and generator bearings as well as difficulties in accommodation of bypass and control valves, plus more difficult inspection and maintenance.

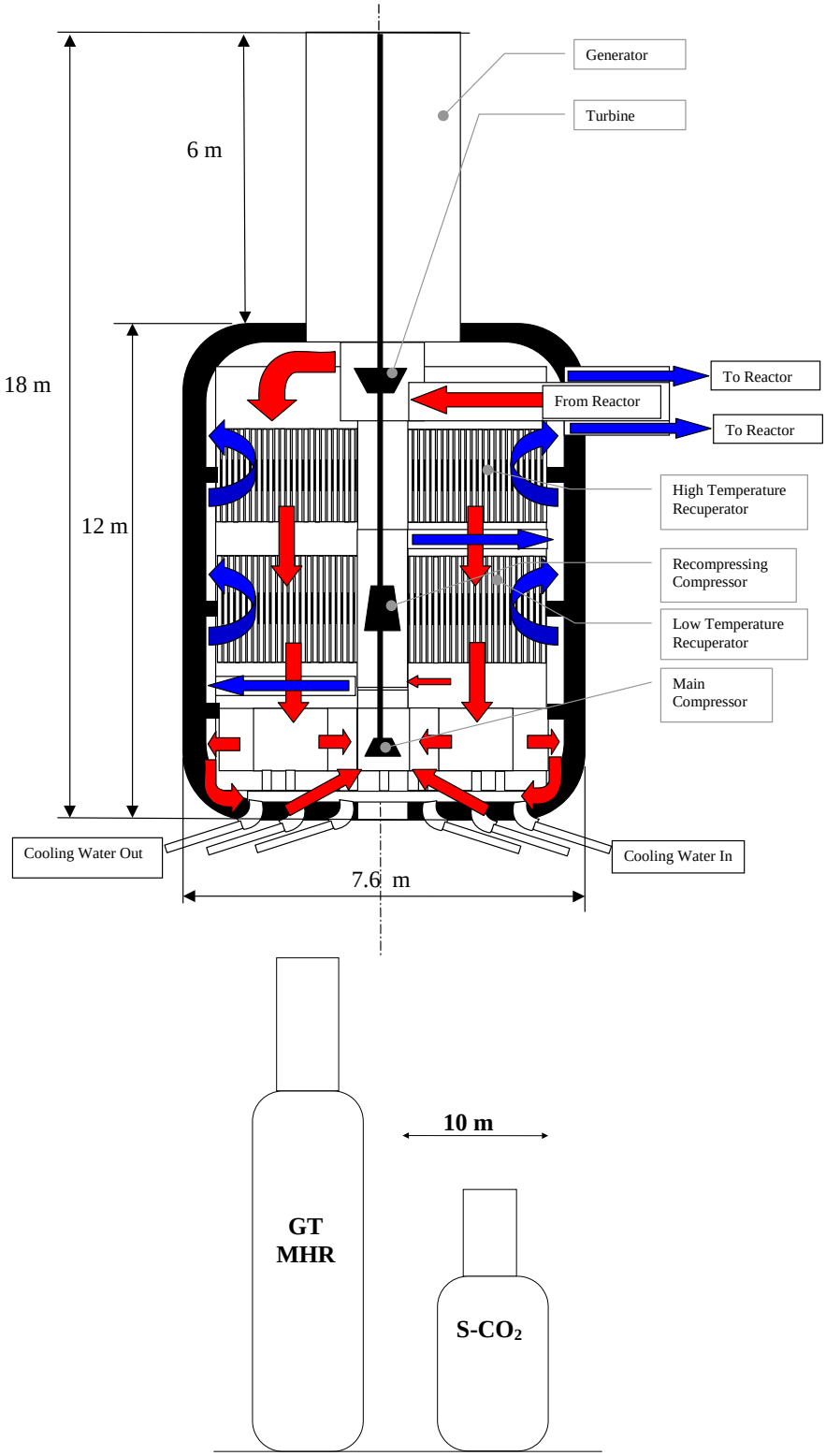

Fig. 2.1 Dostal's Original Integral PCS Arrangement (2-1)

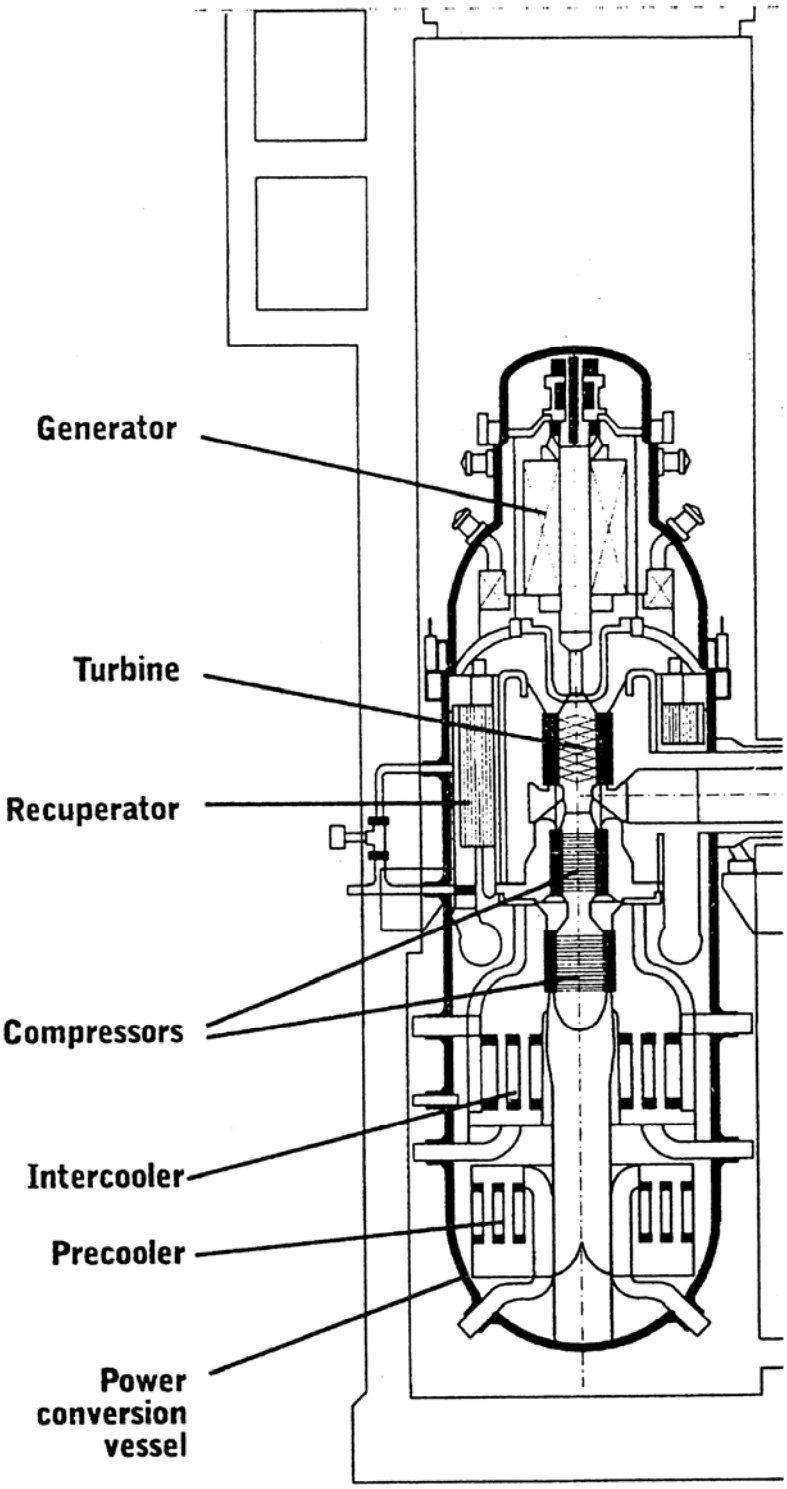

Fig. 2.2 Main Components of GT-MHR

The second generation is shown in Fig. 2.3. The printed circuit heat exchangers are now housed in individual, dispersed pressure vessels connected by ductwork. Prudent vessel size restrictions also lead to use of two trains in parallel, straddling the turbomachinery. The drawbacks to this layout include long and complicated ductwork, leading to large pressure drops and cycle efficiency penalties. The use of pressure vessels to house the PCHE cores also significantly reduce overall heat exchanger power density.

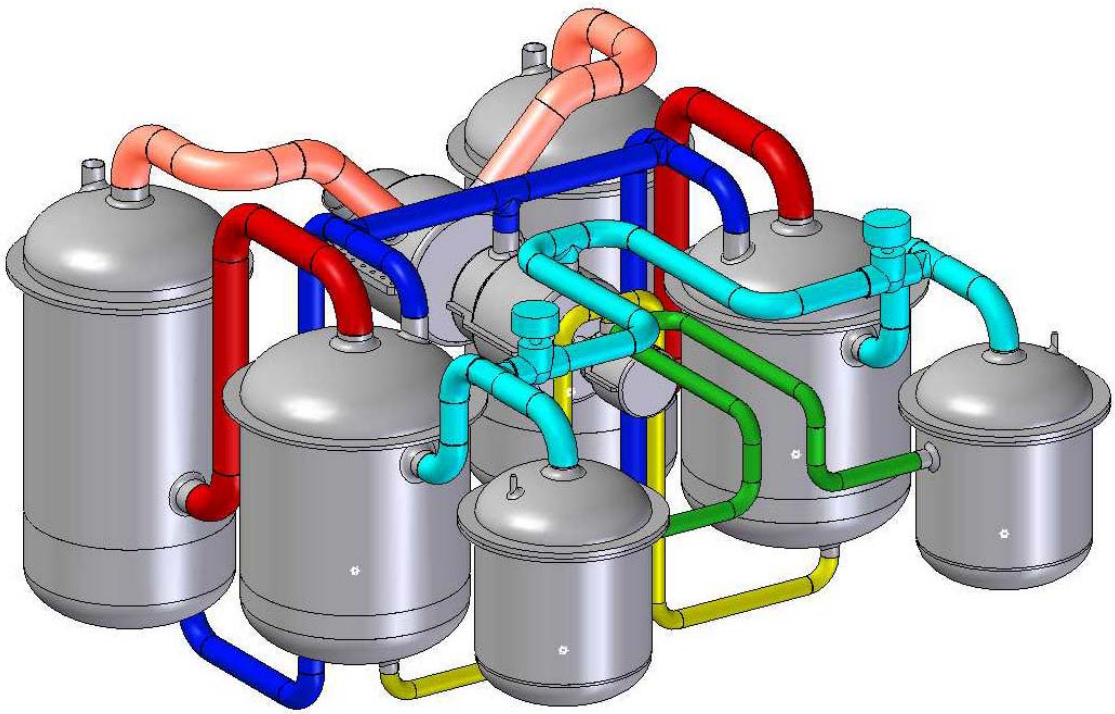

Fig. 2.3 Second Generation, Dispersed Layout

The third generation, the subject of this report, is previewed in Fig. 2.4.

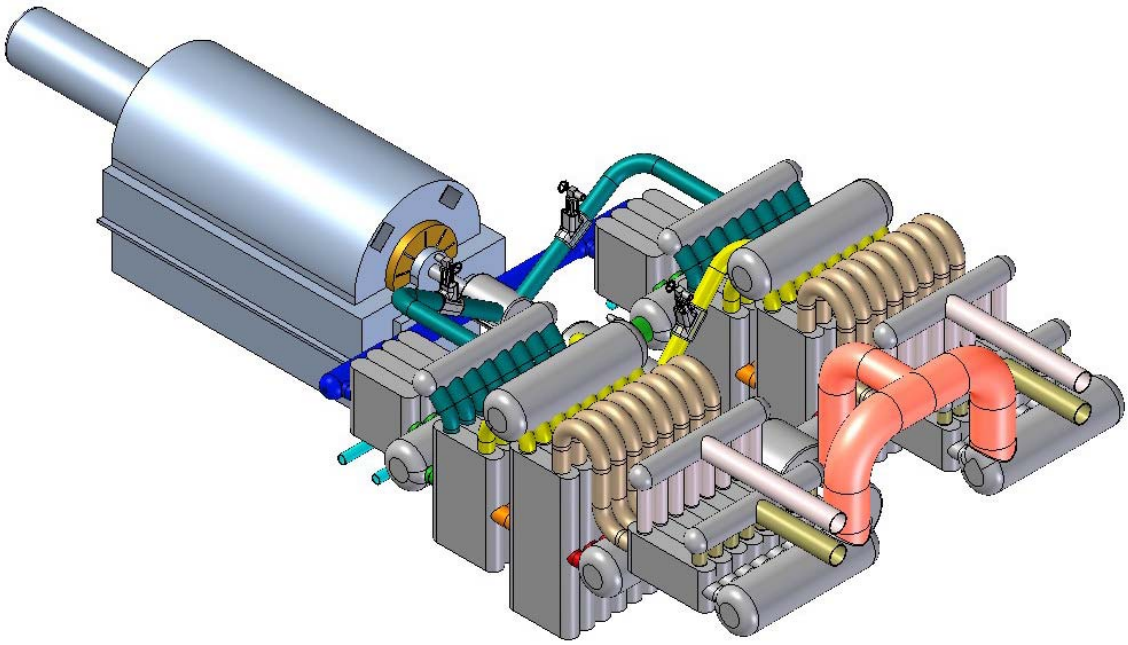

Fig. 2.4 Third Generation 300 MWe S-CO_2 Layout

The PCHE modules are now in the same configuration as HEATRIC™ currently manufactures, and coupled in parallel to headers. It is also important to note that in the third generation designs we have employed HEATRIC™'s latest multiport, zigzag channel, PCHE units for the recuperators. This layout was selected based on ductwork pressure drop studies carried out with the recently-upgraded PCS thermal-hydraulic design code CYCLES-II (2-3). The pressure drop reduction achievable in this layout typically results in on the order of 3% higher thermal efficiency compared to that of Fig. 2.2. Module inspectability, repair and replacement are also significantly improved.

2.3 Concluding Remarks

The work which follows is all based on 3rd generation layouts.

It is important to note that in the current and past design efforts we have not included development of component foundations, and all insulation has been stripped away to display bare components, whereas liberal insulation will be installed in practice.

2.4 References for Chapter 2

(2-1) V. Dostal, M.J. Driscoll, P. Hejzlar, "A Supercritical Carbon Dioxide Cycle for Next Generation Nuclear Reactors," MIT-ANP-TR-100, March 2004

(2-2) P.W. Stahle, M.J. Driscoll, P. Hejzlar, "Supercritical CO_2 Power Conversion System Design and Layout for 300 MWe Plant," MIT-GFR-025R, Sept. 2005

(2-3) D.M. Legault, P. Hejzlar, "CYCLES II: A Steady State Code for Supercritical CO_2 Power Conversion System Calculations," MIT-GFR-036, June 2006.

Chapter 3 Third Generation Plant Layouts

3.1 Introduction

The majority of the initial MIT. work for a power conversion system (PCS) for Generation IV nuclear reactors was directed towards an integral layout (i.e. components enclosed in a pressure vessel), followed by a second generation effort to develop a distributed design (i.e. components connected by piping). Dostal's original design for the supercritical CO_2 (S-CO_2) employed an integral layout, similar to that of the General Atomic GT-MHR. However, recent MIT efforts have been directed to exploring distributed layouts because of several key considerations such as maintenance and inspection ease and difficulties to accommodate bypass valves. The distributed layout also better accommodates thermal expansion because it is not enclosed tightly within a large pressure vessel. Although the ductwork pressure losses within an integral design are quite small, the distributed arrangements described in this chapter are very competitive, with less than a 1% loss due to piping.

The power conversion system (PCS) layouts were developed using SOLID EDGE™, a 3-D auto cad type software (3-8), and CYCLES, an in-house, MIT developed, recompression cycle, optimization code. The recompression cycle developed at MIT for a 300MWe rating coupled to a Generation IV reactor was selected as the reference version for scaling the cycle to power ratings ranging from 20-300MWe. Four power ratings have been chosen for the four principal reference layout designs: 20, 50, 150, and 300MWe. These four designs serve as possible component layouts, but any power rating close to or between these sizes is also possible. For larger reactor ratings multiple PCS loops are employed. Furthermore, the sodium cooled fast reactor is now the chosen Global Nuclear Energy Program (GNEP) generation IV reactor and is accordingly the reference reactor in this study [www.gnep.energy.gov]. All of the liquid cooled reactors are very similar in nature; therefore, the overall cycle layout will only be slightly affected if lead or liquid salt is employed on the primary side of the intermediate heat exchanger (IHX).

A key aspect of the lower power ratings is their ability to use a permanent magnet generator as opposed to a wound rotor generator or some other large and bulky unit. A 20MWe permanent magnet generator is depicted in the 20MWe layout section. The use of variable speed turbomachinery with power electronics enables the rotational speed to increase, thus allowing the permanent magnet generator to shrink with higher speeds. Naturally, an upper limit exists, but because the generation is not limited to the standard 3600rpm, an optimum speed for the generator and turbomachinery can be specified. Currently the upper limit of permanent magnet generators is around 30MWe with rotational speeds typically between 4500 to 7000rpm. Power densities for these generators are on the order of 2.4kw/kg (3800 kW/m^3) which is approximately six times higher than conventional machines! [3-7]

Although 30MWe is the current upper limit of the permanent magnet generators, 100MWe was chosen as the cutoff point between variable and constant speed operation. The variable speed operation is not dictated by the desired power rating, but is an easy to implement feature and can provide a wide range of small power ratings in one unit with reasonably sized auxiliary power electronics. As the technology advances and larger permanent magnet generators become available it is ideal to use them with variable speed turbomachinery because of their impressive partial load operation; small turbomachines also optimize at higher rotational speeds. The power ratings above 100MWe are designed for multiple loop systems using constant speed turbomachinery with the partial load being controlled by conversion loops cutting in and out. Of course, if a large power rating is designed with only one loop it is also possible to use variable speed turbomachinery for partial load operation, but the associated power electronics will also become increasingly larger. A matrix of suggested combinations to obtain desired power ratings is summarized in Table 3.1: they are intended to achieve reasonable partial load control with minimal auxiliary equipment.

As the power ratings increase, the overall layout shifts from a slightly nested turbomachinery train below 50MWe to a single heat exchanger train above 50MWe and finally to a dual heat exchanger train to achieve 300MWe. Outside of the physical plant layout, there is a second tier tradeoff between the larger and smaller power ratings. The smaller power ratings have the option to be almost completely constructed at a remote location and transported to the reactor site and installed as one unit. The smaller ratings also are not as susceptible to the availability of large diameter high pressure pipes. In actuality, it is possible to take advantage of the piping sizes to slightly negate the lower turbomachinery efficiencies by reducing the system pressure drops to a minimum. The only limiting factor for the piping in the low rating layouts is the ability to connect large pipes to the turbomachinery casings. However, this should only be a problem for the power ratings below 30MWe. The higher power ratings are limited to the availability of large diameter pipes. Very large diameter pipes are available from piping catalogs, but temperature and pressure requirements limit the currently available pipes to around 24 inches outer diameter with a 2 inch thick wall. Overall, the performance of the smaller power ratings is about 1% less efficient than the larger ratings. <u>One of the underlying assumptions for the following preliminary layouts is the availability of high temperature and pressure pipes up to 1.25m inner diameter.</u> If very large diameter high pressure piping (≥1.0m) is available, the large power rating can display very impressive performance, but if the limit is a 24 inch outer diameter pipe the piping losses will be very disadvantageous. For example, a 24 inch outer diameter pipe is readily available for use with high temperature and pressure with the wall thickness being slightly larger than two inches. If this pipe was used as the turbine inlet pipe the net cycle efficiency would be penalized approximately 1.5% due to this pipe run alone. Fortunately, this is the only large diameter pipe in the layout so the prospect of further efficiency losses due to pipe reductions is not likely. When the first layout was developed and the piping losses were calculated it was discovered that improperly sized pipes could easily reduce the cycle efficiency by more than 10%. As of now, all of the designs are for a distributed layout, as opposed to an integral layout with all of the components in one pressure vessel: the configuration originally proposed by Dostal.

Table 3.1 - Suggested distributed layout arrangements

Total Rating (MWe)	Turbomachinery (comp/turbine)	PCS Units (loops)	Configuration (number of trains per PCS)
20-25	radial/radial (V)	1	Single
50	radial/radial (V)	1 or 2x25	Single
100	radial/radial (V)	1 or 4x25 or 2x50	Single
125	radial/axial (C)	1	Single/Dual
150	radial or axial/axial (C)	1 3x50 (or 100+50?)	Single/Dual Single
250	radial or axial/axial (C)	1 2x125	Dual Single/Dual
300	radial or axial/axial (C)	1 2x150 or 3x100	Dual Single/Dual
500	radial or axial/axial (C)	2x250 4x125	Dual Single/Dual
750	radial or axial/axial (C)	3x250	Dual
1000	radial or axial/axial (C)	4x250	Dual
1200	radial or axial/axial (C)	4x300	Dual

(V) = variable speed turbomachinery that will require power electronics to produce constant frequency AC power

(C) = constant speed turbomachinery

Dual = two recuperator trains in parallel per PCS loop; also two IHX ducts to/from PCS per loop; but one turbomachinery train per PCS loop.

Single = one recuperator train per PCS loop with one turbomachinery train.

Below 100MWe the turbomachinery can be chosen to be variable speed to allow for partial load operation with the proper DC/AC conversion. Above 100MWe it may be desirable to use several loops and simply cut them in and out appropriately for lower power requirements.

3.2 Arrangements (Solid Edge)

3.2.1 Starting Point – Second Generation PCS

The first dispersed design layout is shown in Figs. 3.1 through 3.3 and was developed by Peter Stahle, a Research Engineer in the MIT Nuclear Science and Engineering Department and the MIT Plasma and Fusion Center, and employs a parallel heat exchanger train layout feeding into one turbomachinery train centrally located, straddled by pressure vessels containing heat exchanger modules [3-9]. Each heat exchanger train is capable of handling 150MWe worth of thermal power. Further iterations have refined the original layout, but all of the larger power ratings have adopted the parallel heat exchanger train idea. The most recent designs are discussed in detail in their respective sections.

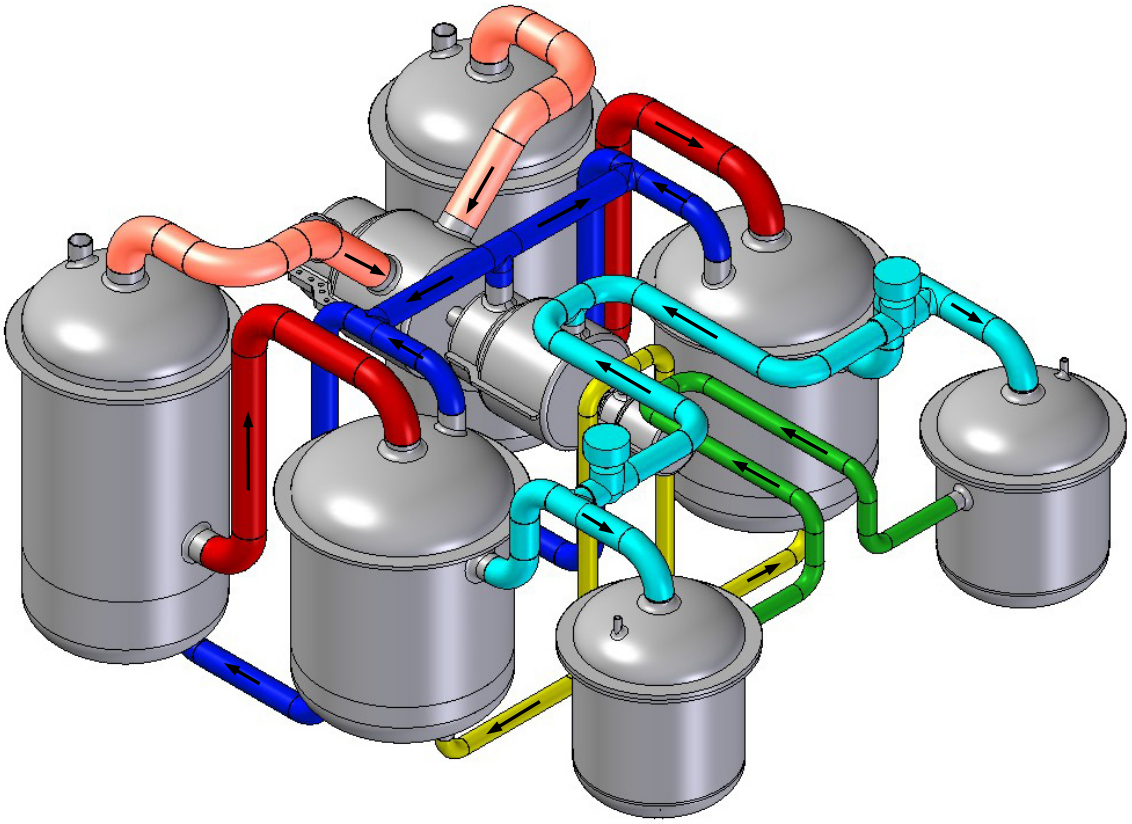

Fig. 3.1 Second generation layout for 300MWe PCS isometric view

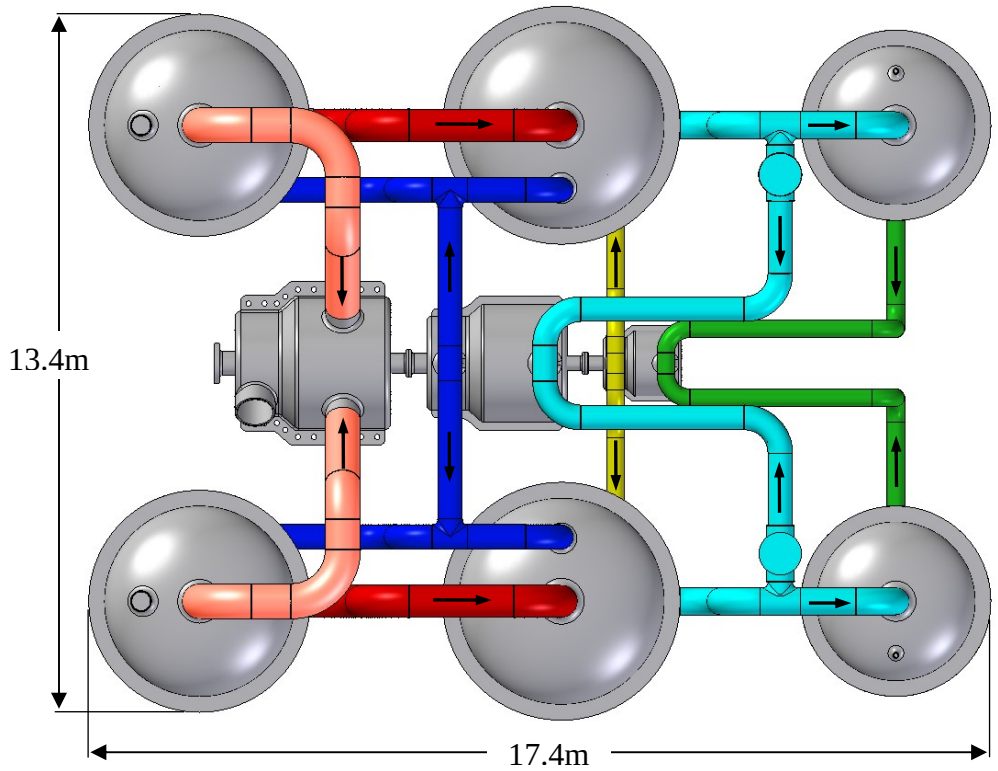

Fig. 3.2 Second generation layout for 300MWe PCS top view

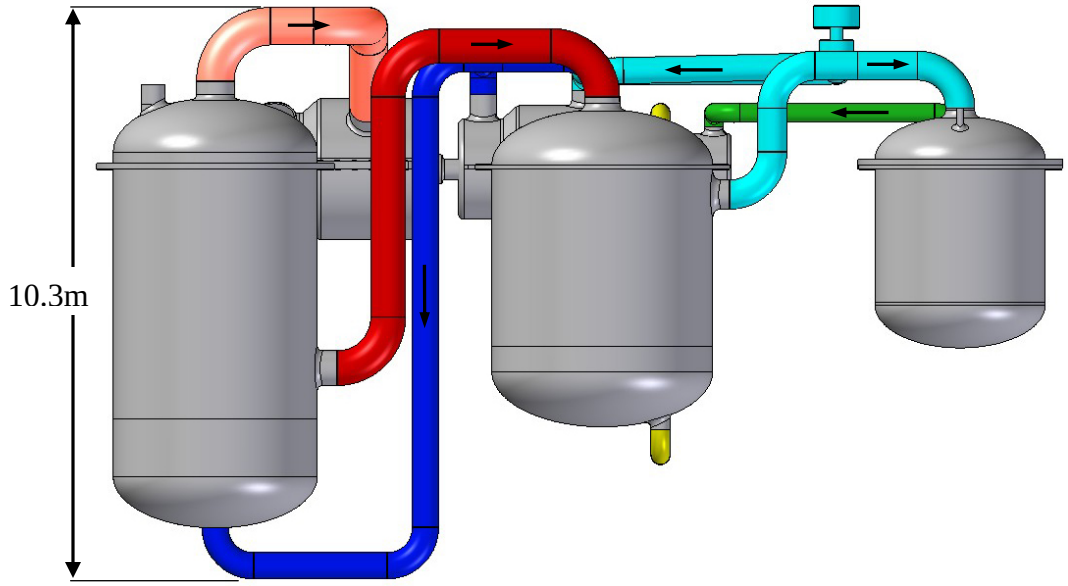

Fig. 3.3 Second generation layout for 300MWe PCS side view

The depicted design employs the heat exchangers in two parallel trains with the turbomachinery in the middle. The HEATRIC™ heat exchangers are located within the six pressure vessels, with the high temperature recuperator being in the largest vessel, low temperature recuperator being in the medium-size vessel, and the precooler in the smallest vessel. The method of feeding the fluid to the heat exchangers strongly dictates the overall layout of the piping between the heat exchanger modules and the turbomachinery. Fig. 3.4 depicts how the heat exchanger modules are arranged within each pressure vessel. The HEATRIC™ heat exchangers (PCHE) in this layout employ partial counterflow heat exchangers using a "multiported" configuration with plena integrated into the diffusion bonded plates. The beginning and end of the secondary side have a partial cross flow pattern near the plena. To minimize pressure drop and its impact on efficiency, PCHEs are arranged in such a way that the hot low-pressure stream goes straight through the active core of the heat exchanger and does not need special plena (plena are formed by vessel space as indicated on Figure 3.4).

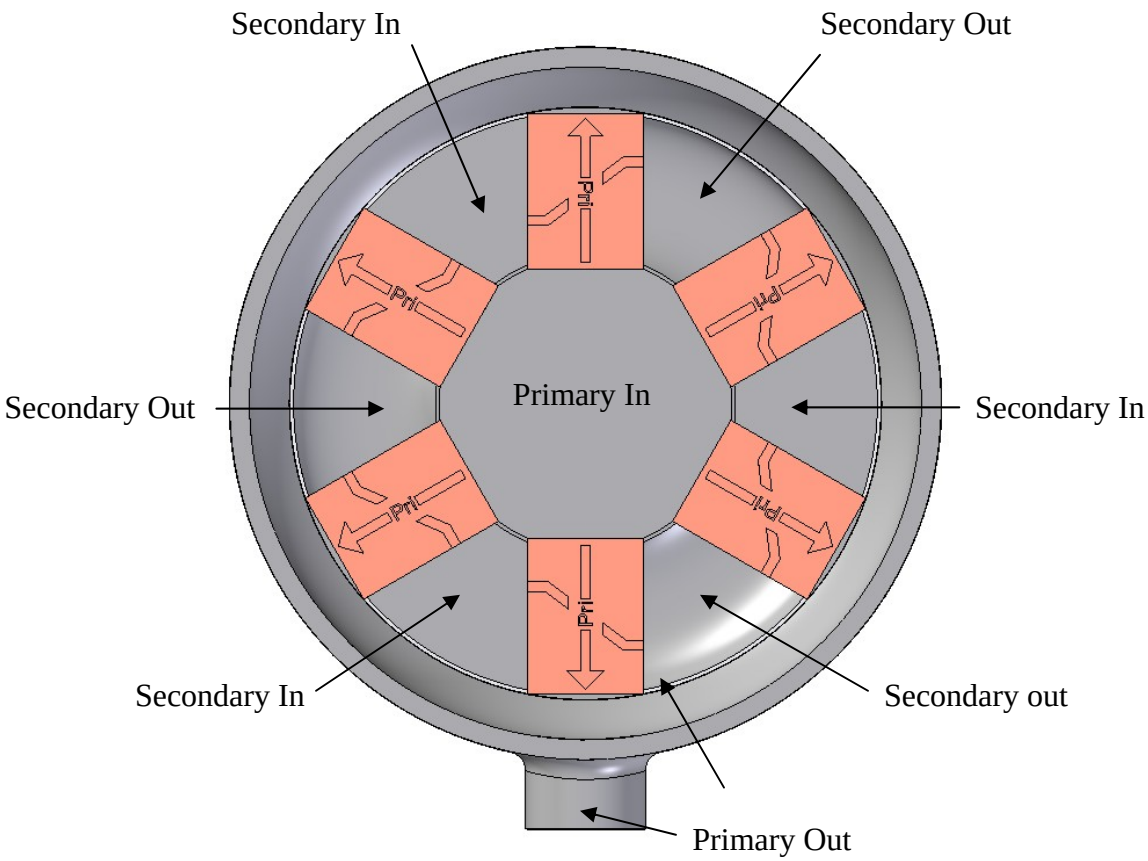

Fig. 3.4 Cross section depiction of heat exchanger vessel for second generation layout

The primary fluid (low pressure, high temperature) from the turbine discharge is directed down the center section of the vessel for distribution among the six modules. The fluid flows directly through the recuperator and is collected in the outer vessel where it converges and flows to the low temperature recuperator via one pipe (primary out). The low temperature recuperator has the same flow pattern as the high temperature recuperator with the primary low pressure, high temperature fluid entering and being distributed in the middle of the vessel.

The secondary fluid (high pressure, low temperature) enters the vessel at the bottom via the inlet pipe which discharges the fluid to a small distribution plenum. Within the plenum is a baffle which directs the fluid to three of the six triangular shaped paths, as seen in Fig. 3.4. Three of the triangular paths are used for distribution and three are used for collection of the secondary fluid. Once the fluid enters the secondary distribution channel it flows in opposite directions across the two bordering recuperator modules. Each plate on the secondary side contains a small end plenum, where flow from individual channels is collected and directed through small side openings. The fluid is then collected in the remaining three triangular paths and is directed to the plenum at the top of the vessel where it leaves via one pipe (secondary out).

After the CO_2 leaves the low temperature recuperator it is split between the recompressing compressor and the precooler. The flow from the low temperature recuperator to the precooler is directed into the "primary in" channel with the cooling water using the secondary side.

This design has several strengths and weaknesses. The strengths include the piping layout being a feasible design as it allows for thermal expansion in the piping runs to accommodate stress and the pipes accurately depict the readily available pipe sizes. Although detailed stress calculations have not yet been performed on the layout, the design appears to be tolerant of expansion and also able to easily adjust if necessary to accommodate higher stresses. However, the disadvantages are the increased probability of mixing water and CO_2 in the precooler, low power density of the heat exchanger vessels, and long single pipe runs. Although the probability of contaminating the CO_2 side of the system with water is still low due to the differential pressure being in favor of the CO_2, the vessel layouts include more welded seams and the presence of non-heat-exchanger structures. The risk of leakage within each heat exchanger module's core is low because of the diffusion bonding, but handling the fluid within each vessel adds an extra risk. Also, the design of triangular plena that contain high pressure while allowing for thermal expansion is challenging.

Arranging the heat exchanger modules in the vessels reduces their power density, which carries over to give a lower power density to the overall layout. The power density of a HEATRIC™ heat exchanger core is around 25-30MWt/m^3, but if they are arranged within a vessel as shown in Fig. 3.5 the power density is reduced to around 7.6MWth/m^3 (for the HTR). This lower power density partially negates the advantage of using this type of compact heat exchanger. The size of conveniently manipulated pressure vessels also limits the total rating of a heat exchanger train. Also, using a pressure vessel for

arranging the heat exchanger modules increases the overall length of piping runs and limits the use of several parallel pipes to reduce the associated pressure losses. With the pipe sizes depicted in the above layout the pressure drops would lead to 10% reduction of overall cycle efficiency. Clearly this is unacceptable and can be improved upon. The pipes between heat exchanger modules were later increased to reduce the very high pressure losses, but the best the design could achieve still exhibited 4% efficiency reduction. The power density for the arrangement in the third generation layout for the HTR is approximately 29.7MWth/m^3 exclusively for the core, and is reduced to about 11.4MWth/m^3 for a complete module (plena included). Although this is not a large power density improvement upon the heat exchangers arranged with a vessel, it does allow for a better piping arrangement and increased modularity.

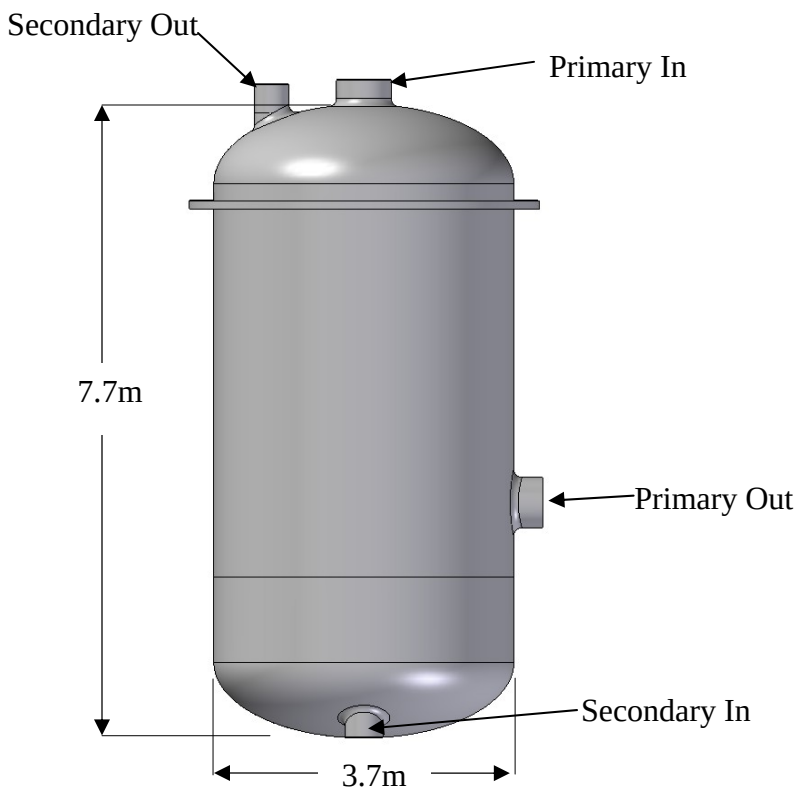

Fig. 3.5 Heat exchanger vessel for second generation layout (dimensions shown for a 150MWe HTR vessel)

3.2.2 Third Generation Cycle Layouts

The advanced multiported HEATRIC™ heat exchangers with a full counterflow pattern and zig-zag channels have very high core power density and make it possible to reduce overall volume of the PCS. The heat exchangers are the largest components in the power conversion cycle; therefore, their layout generally dictates the overall layout. The heat exchangers could still be arranged with several modules arranged in a pressure

vessel, but they can be more efficiently arranged to have a very high power density and enable the use of many parallel pipe runs to make the piping losses more moderate. The most recent version of the cycle layout, as described in this report, exploits this very high heat exchanger power density and has the modules arranged in a parallel fashion. This approach was originally introduced to reduce the pressure losses on the high pressure side of the recuperators, but it also has an added advantage in the transportability of the modules. These modules are essentially separate heat exchangers which will then be welded into a frame, possibly on location, but preferably at the manufacturer's plant to make the full heat exchanger unit. Once again, a detailed stress analysis has not been performed, but the cycle can easily be adjusted to add expansion loops if this proves necessary.

Each heat exchanger module is comprised of numerous diffusion bonded plates making up the core with welded plena. The optimum design has the module restricted in two directions; length and width. The length is fixed because each unit (HTR, LTR, and PRE) are optimized for a specific length of heat transfer and the width is fixed due to HEATRIC™ manufacturing limits of 60cm due to the maximum width of the photosensitive film necessary for the etching process currently available. Therefore, the only way to expand the volume is in the vertical direction. It is desirable to limit the height of each module to around 5m to keep the distance the fluid must travel to a minimum. Each module has an inlet and outlet for both the low pressure and high pressure side. This can be an added bonus for replacement, if necessary; since a single module can be removed and replaced. Also, this arrangement makes it possible for the turbine to have a very large diffuser. This increases the turbine total-to-static efficiency while only minimally adding to the overall footprint of the layout. Using the same number of modules for both the high and low temperature recuperators, the CO_2 can be directly discharged from one module to the next via a very short pipe run (approximately ½ meter) which circumvents the necessity of many large diameter pipes and reduces the large pressure losses associated with large piping runs in the 2nd generation design. Essentially, the recuperators (HTR and LTR) are arranged as parallel modules which are clustered together to form the full recuperator unit. The number of parallel modules is based on the required recuperator volume and the desired height. Initially, the height was based on keeping the overall height to around or below 5m, but this can be relaxed at the expense of a minor increase in piping pressure loss if designing for a minimum footprint is the prime concern. Fewer heat exchanger modules will make the layout taller and less wide.

The issue of stress analysis also has to be considered. Because of the large ΔT in the cycle between full operational and ambient temperatures the thermal expansion needs to be addressed. The heat exchanger units could in principle be welded together to essentially make one large block, but the end modules will move more than the center modules. This issue can be addressed by not directly welding the modules together, but placing a softer alloy spacer between each module and strapping the modules together. Each module would have to be secured to the foundation separately. This allows each separate module to expand individually, which allows the end module to only move as much as the center module, thus greatly reducing the transverse motion of the pipes and

putting equal strain on each pipe. In addition, such arrangement makes the modules easily replaceable. Clearly, the high temperature recuperator has a larger ΔT than the low temperature recuperator or the precooler. Therefore, the high temperature recuperator will expand more vertically than both the low temperature recuperator and precooler. The overall effect of this on the piping has not been closely analyzed yet, but if the unequal differential expansions are indeed a problem this can be remedied by simply moving the total heat exchanger units farther away from each other and extending the length of the input/output connectors, and adding an expansion bend if necessary. This will slightly increase the overall footprint of the cycle, but it will better tolerate the vertical motion caused by expansion.

To summarize:

Advantages of new design are:

- Smaller footprint
- Very low ΔP throughout cycle, thus, higher cycle efficiency
- Better transportability, inspectability, and repairability/replacement due to modularity
- Standard HEATRIC™ configuration

Disadvantages of new design:

- More welded connections
- Large collection/distribution manifolds with closely spaced connector elbows

3.3 Heat Exchanger Arrangement

Because cycle efficiency is proportional to fractional pressure losses, i.e, pressure loss in each section divided by pressure in this section, pressure losses on the low pressure side are the key pressure losses that need to be reduced. Therefore, the arrangement of PCHEs is dictated by the requirement of minimum pressure loss on the hot side.

When the first power conversion layout was completed and the piping losses analyzed the turbine was arranged to discharge to the outside plenum of the high temperature recuperator. Experimenting to find the most highly compact design for the very low power ratings, one layout directed the low pressure fluid to the inside plenum. When the piping losses were calculated for this design it was discovered that the losses were extremely large. The inside plenum is limited to receiving the fluid from either the top or the bottom while the outside plenum can receive the fluid from any height along the side or from the top or bottom. This is important for two reasons: fluid pressure losses and stress considerations. The inside plenum requires some of the fluid to travel the entire height of the heat exchanger before entering the active core through a more

narrow flow path. If the low pressure fluid is in the inside plenum it will have a much higher fractional pressure loss and larger effect on cycle performance than if the high pressure fluid is so located. It is also desirable to have the low pressure fluid in the outside plenum because the external fluid boundary will not need to be as strong. In the manufacturing process of these heat exchangers the inside plenum is part of the plate stack which is joined by diffusion bonding. This allows the heat exchanger to withstand extremely high stress and is already well suited, with no extra reinforcement for the high pressure fluid. Essentially, it is important to direct the high pressure fluid through the plena which cause the highest pressure drops. Although this is not required, it significantly reduces the pressure loss penalty in the cycle. A cutout of a HEATRIC™ heat exchanger as used in the conversion cycle has been drawn in SOLID EDGE and can be used to easily view the flow distribution and path through the unit. This can be seen in Fig. 3.6.

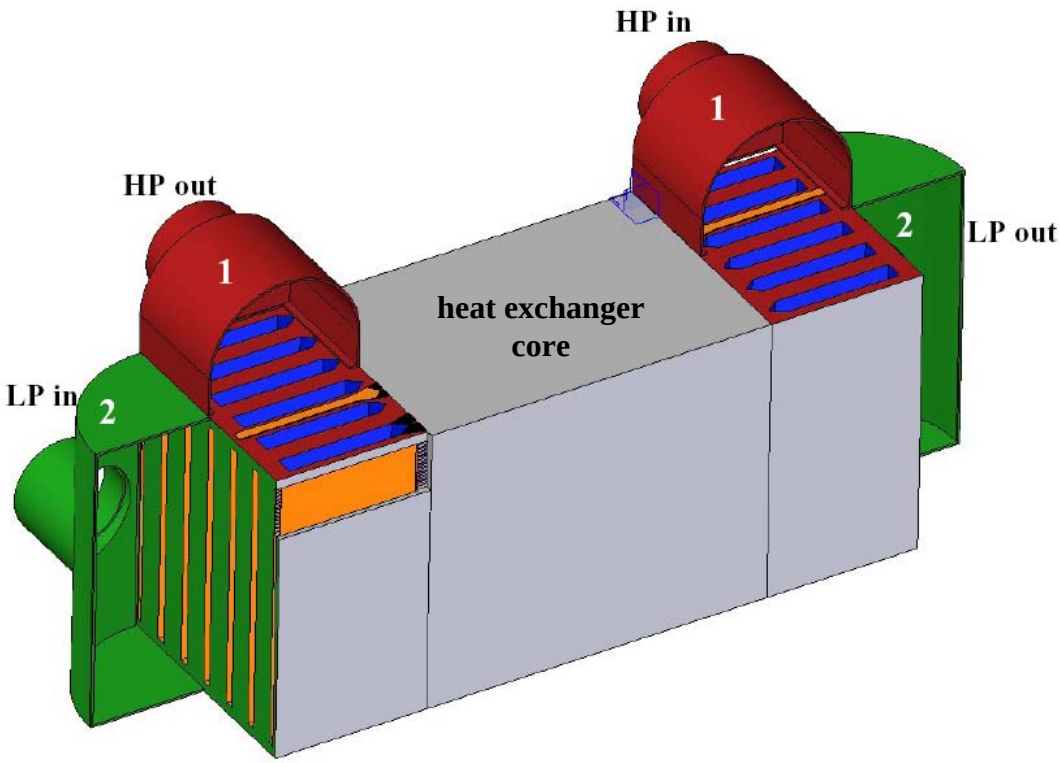

Fig. 3.6 Cutout view of PCHE

This arrangement of the PCHE module is the same as developed in the MIT report CANES-ANP-PR-002 "Supercritical CO_2 Brayton Cycle for Medium Power Applications" for Knolls Atomic Power Laboratory (KAPL). [3-4]. The high and low pressure sides of the heat exchanger are shown in red and green (component 1 and 2), respectively. When the fluid enters the high pressure side it is distributed into the blue channels which run the entire height of the unit. From the blue channels the fluid is distributed into the core and is collected on the opposite side in the blue channels. The low pressure fluid enters the heat exchanger via the green inlet and is distributed to the

orange channels. The low pressure fluid enters the heat exchanger on end opposite to the high pressure fluid to obtain a counterflow configuration. The orange distribution channels are positioned between the high pressure blue channels and also extend the full height of the heat exchanger. The low pressure fluid enters the distribution channels from the side plenum cover through numerous drilled passages. Although the low pressure inlet and outlet pipes are shown entering from the side, it is possible to connect them to the plenum at any point along the outside, thus enabling more freedom in the associated piping. Also, easily seen in Fig. 3.6 is the distance the fluid must travel once it enters the plenum before it is distributed through the active core. The average distance for the high pressure plenum is one half the overall height and that of the low pressure plenum can be slightly less than one quarter of the overall height.

Once the inside plenum was designated to handle the high pressure fluid it was also discovered that the net cycle efficiency could be raised even further by increasing the cross sectional flow area of the high pressure plenum. The initial size of the high pressure plenum caused a large penalty due to its small flow area. Noteworthy efficiency gains were made until the initial plenum was increased to 5x its original cross sectional area, where it reached a plateau. In Fig. 3.7 on the right is a picture of the initial size of the HEATRIC™ heat exchanger plate. The drawing on the left is an AutoCAD depiction of what the new shape of the high pressure plenum will look like. Increasing the high pressure plenum flow area 5x increases the length less than 3x while making a noticeable performance increase.

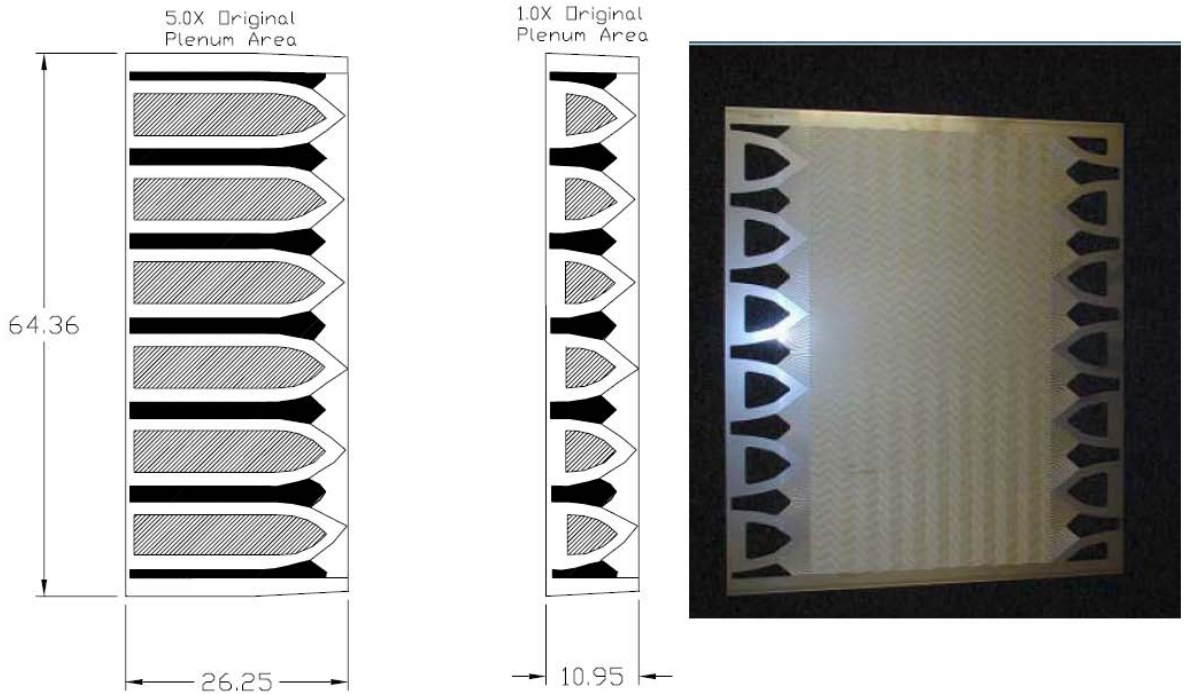

*Dimensions are in centimeters

Fig. 3.7 Increasing the HP plena volume of the PCHE

It is also evident in the above figures how the addition of the large plena increases the length of the heat exchanger. The active core length is less than 1m for most of the heat exchangers, but the overall length is now approximately 2m due to the plena. The plena can be increased or decreased depending on the pipe size, but if the pipes are attached on the end (as opposed to the side) the maximum usable diameter is about 0.5m (20in). Regardless, the heat exchanger is very compact compared to other types of heat exchangers.

Once the high and low pressure flow through a heat exchanger module was established, the piping considerations for connecting the various components were primarily to keep the major losses to a minimum. It is more important for the low pressure fluid to have more short and straight runs than the high pressure fluid. Also, using the same number of high temperature recuperator modules as low temperature recuperator modules, it is possible to discharge directly from one module to the next, essentially making numerous parallel recuperation modules bundled together to form one large unit.

3.4 Third Generation Layout – 300MWe

For the 300MWe power conversion unit, the CO_2 is delivered from the intermediate heat exchanger (IHX) via two 1.25m diameter pipes to feed into one turbine inlet pipe. After the CO_2 is expanded in the turbine it enters two large diffusers which double as distribution manifolds, to deliver the fluid to the low pressure side of the high temperature recuperators. The CO_2 is fed to the outside plenum of the HTR from the turbine diffuser and exits the opposite outside plenum. The CO_2 flows from the outside plenum of the HTR to the outside plenum of the LTR via one 20 inch inner diameter pipe for each module. The CO_2 is collected at the exit of the LTR in a large diameter collection manifold where the flow is split between the precooler and recompressing compressor.

Because the precooler modules are much smaller than the two recuperators it is not effective to try to evenly pair the precooler modules with the LTR modules. Also, an effective flow split mechanism is required between the LTR and precooler. Therefore, the LTR cannot directly discharge the CO_2 to the precooler the way that the HTR delivers the fluid to the LTR. The flow from the LTR to the precooler is handled by using a large collection manifold between the two heat exchangers. The LTR discharges to the collection manifold and the precooler receives the fluid from the opposite side, thus allowing a variation in the number of modules. This method increases the minor losses by adding one additional fluid entrance and exit loss, but at this point in the cycle the fluid density is already high enough to not have these additional losses contribute noticeably. The large collection manifold also allows the fluid to directly flow to the recompressing compressor via a large diameter pipe. The collection manifold is large enough to allow the recompression feed pipe diameter to be limited by the size of the

compressor casing and not the available pipe sizes, making the pressure drop between the collection manifold and the recompressing compressor negligible.

The precooler is arranged in four modules to receive the fluid from the collection manifold and discharge directly to a smaller collection manifold which directs the fluid to the main compressor. From the main compressor the fluid is sent at 20MPa to another large collection manifold which distributes the flow to the high pressure side of the LTR. Control valves are located on both compressor outlets to manage the correct recompression flow split. The fluid flows counterflow to the low pressure fluid through each heat exchanger module and is discharged to another collection manifold to allow for the collection of the additional mass flow from the recompressed fraction. The collection manifold discharges to the high pressure plena of the high temperature recuperator. Although the fluid temperature is slightly higher at this stage of the cycle the additional entrance and exit losses and not very noticeable due to the fluid being at the high pressure which lowers the fractional pressure loss.

An issue arose considering the numerous pipe penetrations in the collectors. When the ASME pressure vessel code (NB 3338.2) was checked it was found that

> "the arc distance measured between the center lines of the adjacent nozzles along the inside surface of the shell is not less than three times the sum of their inside radii for openings in a head or along the longitudinal axis of a shell and is not less than two times the sum of their radii for openings along the circumference of a cylindrical shell."

The above layout pertains to the "three times the sum of their inside radii" arc. Originally, the pipes modeled as 22" outside diameter and 1" thick (20" inside diameter) were the sections:

- Turbine to high temperature recuperator
- High temperature recuperator to low temperature recuperator
- Low temperature recuperator to split T
- Split T to precooler
- Low temperature recuperator to merge T

To satisfy the ASME pressure vessel requirements for this particular layout there are two options: reduce the pipe diameters for the above listed pipes or to put a spacer in between each heat exchanger module to accommodate the necessary distance. With no spacers the pipes are 0.6m apart, on center. Therefore, the pipes will have to be reduced to 15.74" inner diameter. When this option is further explored in the pressure loss calculations it is obvious it is not very detrimental to overall system performance. Reducing the pipes to satisfy the pressure vessel code lowered the cycle efficiency by 0.06%. However, if indeed the modules are moved slightly apart to allow for thermal expansion, the initial 20 inch inner diameter pipes may be used.

The maximum size pipe able to be attached to the heat exchanger modules is limited by the allowable width. As of now, HEATRIC™ is unable to make the modules wider than 0.6m. For this reason, the pipes were modeled as 20 inch outer diameter pipes to allow for the necessary welding/connection method. This may be slightly conservative, but it allows for additional required space if the pipe walls need to be increased, or to possibly increase the inside diameter later on. However, increasing the pipes to 20 inch inner diameter will only result in an efficiency increase of 0.08%, plus, the spacer method will likely be employed. Because HEATRIC™ has relatively small field experience with this type of application the required maintenance protocol is somewhat unknown. Using the spacers allows for much easier inspection and removal of the heat exchanger modules. The spacers could more easily be cut, facilitating the removal of the modules, than if the modules were welded together. This is not a focal point of this report, but it is important enough to mention for further consideration at a later stage when a stress analysis is performed.

One more possibility not depicted by the above layouts is to take two heat exchanger modules and weld them together before attaching the plena to essentially make the unit twice as wide as the manufacturing limit. Once this is done attach a plenum that will cover the wider heat exchanger. This will allow a much larger diameter pipe to be connected to the heat exchanger, which will increase the overall flow area and improve efficiency. For example, if the 20" outer diameter with 1" thick walls were used the total flow area for two pipes is $0.328m^2$ compared to $0.785m^2$ for a 1m inner diameter pipe. This is a 2.4 times increase in flow area. However, with this method the spacers will also have to be used to satisfy the ASME requirements on vessel penetrations. The dual module/one large plenum pipe method will further complicate the layout, make it more vulnerable for leaks, and require both single modules to be removed for maintenance. Therefore, it is suggested that this option not be explored at this time. Finally, it is noted that the 0.6m limit of the module width is dictated by the size of photosensitive film for the etching process. In a discussion with HEATRIC™ we learned that this is not necessarily the hard limit and if there is a strong interest in larger module size accompanied by the order of a large amount of PCHEs, larger film size could be developed.

The cycle code calculated efficiency is 48.0% which is only about 0.7% lower than the efficiency obtained for the PCS with zero pressure drops in pipes and PCHE plena (but including pressure drops in the active cores of PCHE). This is significant improvement of cycle performance in comparison with 2nd generation layouts, where cycle efficiency was 44%. If the 15.7 inch inner diameter ASME reduced pipes were not required the efficiency can be raised only approximately 0.05% for 20 inch inner diameter pipes. Once the stress analysis is performed and the correctly sized spacers for the heat exchangers are determined, the pipes may be able to be increased slightly, but no further significant piping-related gains can be made to improve the cycle performance. The pertinent data for the performance estimates can be found in Table 3.2. All of the piping sizes in the layout depictions do not necessarily correspond to standard pipe sizes. The pipes are merely represented as generic sized (i.e. a specified inner diameter) and it is assumed that once the actual pipe sizes are chosen a standard pipe very similar in size

can be used. However, the pipe sizes were checked with respect to very preliminary stress calculations to ensure that at least the ASME code for hoop stresses at operating temperature and pressure were satisfied.

Table 3.2– Pertinent data for cycle performance calculations

Electrical power ($MW_{electric}$)		150.3
Thermal Power ($MW_{thermal}$)		313.0
Maximum operating pressure (MPa)		20.0
Turbine Inlet Temp (˚C)		650.0
Pressure Ratio		2.60
*Reactor/IHX pressure drop (kPa)		500.0
*Turbine Efficiency (%)		95.0
*Main Compressor Efficiency (%)		85.07
*Recompressing Compressor Efficiency (%)		89.8
*Mechanical Efficiency (couplings) (%)		99.0
*Generator Efficiency (%)		98.0
*Frequency Converter/Switchyard Efficiency (%)		98.0
Main Comp Inlet Temp (˚C)		32.0
Cooling water temp (˚C)		20.0

*Assumed values

The turbomachinery was sized based on the work by Dr. Yifang Gong [3-3]. The turbine is modeled as a four stage axial turbine, the recompressing compressor is modeled as a three stage radial compressor, and the main compressor is modeled as a one stage radial compressor. The actual length of each turbomachine can vary with the length of the diffuser/inlet/outlet chambers. Also, the casings can be increased or decreased in diameter to accommodate attachment of larger pipes. This is not an issue for the 300WMe power rating, but the smaller power ratings may require an oversized turbine casing or accept larger pressure losses throughout the cycle.

The control valve placement for all the designs is based on previous work at one of the initial stages of layout design, but has not been further verified. Currently, the control valves are placed on the high pressure side of each compressor. The valves are only meant to control the flow split between the two compressors. Further considerations may reveal the need for control valves at another location along with anti-surge valves. The partial load control also remains to be established and will have to be added in the future. Depending on the required control scheme the PCS layout may have to be adapted to allow for the additional control components. Also not depicted in any of the PCS layouts are the reactor isolation valves. Control valves for partial load control are not shown because the most efficient and effective method has not yet been established. The method of control is not a focal point of this report and the PCS layout will have to be adjusted once the control method is resolved.

Other issues not addressed in the layout are the treatment of the foundation and the component insulation. It is assumed that the foundation can be developed at a later

time when the layout has undergone all the stress calculations and modifications (if necessary) for thermal expansion. The actual foundation should not be very difficult to design. The biggest concern will be securing the turbomachinery. The heat exchangers can be placed on the floor or an individual foundation secured to the floor. The insulation is also not covered because that one is of the last considerations, and probably the easiest. Currently, there should be no constraints limiting the placement of insulation in the necessary locations. Also, the amount of insulation required is dependent on the final layout design. One issue not yet resolved is whether internal insulation will be required in the hottest (e.g. 650˚C) ductwork.

The PCS layout has the option of placing the generator next to the turbine or the main compressor. If it is placed next to the turbine, the shaft between the turbine and the two compressors will need to sustain a smaller torque than if it is placed next to the main compressor. Also, the shaft between the turbine and the generator will only have to be designed for the induced torque between the two components. Up to this point the actual shaft design has not been performed. The shafts depicted in the PCS layouts are only for illustrative purposes. Figures 3.9 through 3.11 show the PCS layout in isometric, plan (horizontal), and elevation (top) views, respectively. In these and many of the following figures, the abbreviations listed in Table 3.3 are used as labels to identify principal components, with several components depicted in Fig. 3.8.

Table 3.3– Key to figures

Indicator		**Component**
TUR		Turbine
RC		Recompressing compressor
MC		Main compressor
IHX		Intermediate heat exchanger
HTR		High temperature recuperator
LTR		Low temperature recuperator
PRE		Precooler
GEN		Generator
FSV		Flow split valve
CV		Control valve
BV		Bypass valve

*figure key is good for all following PCS layouts

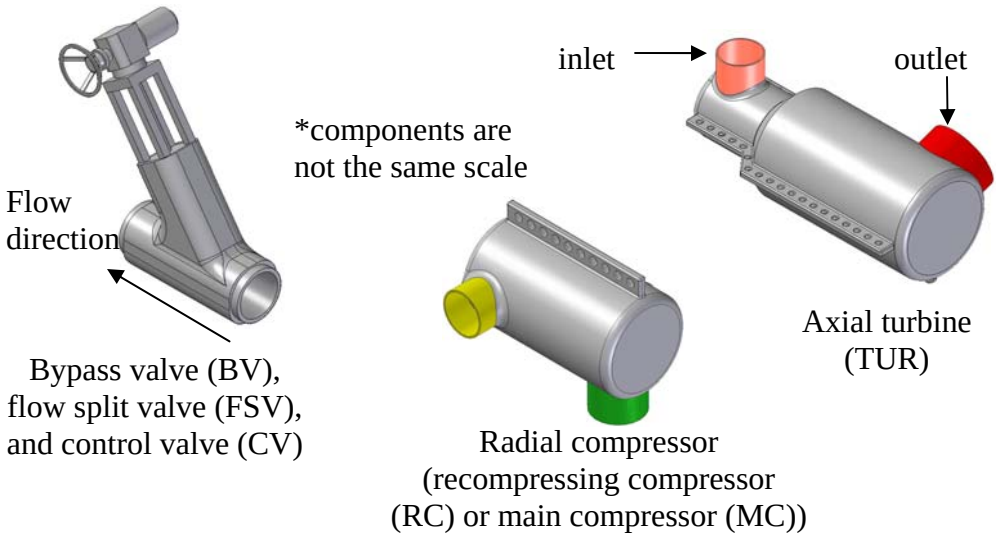

Fig. 3.8 Typical cycle components

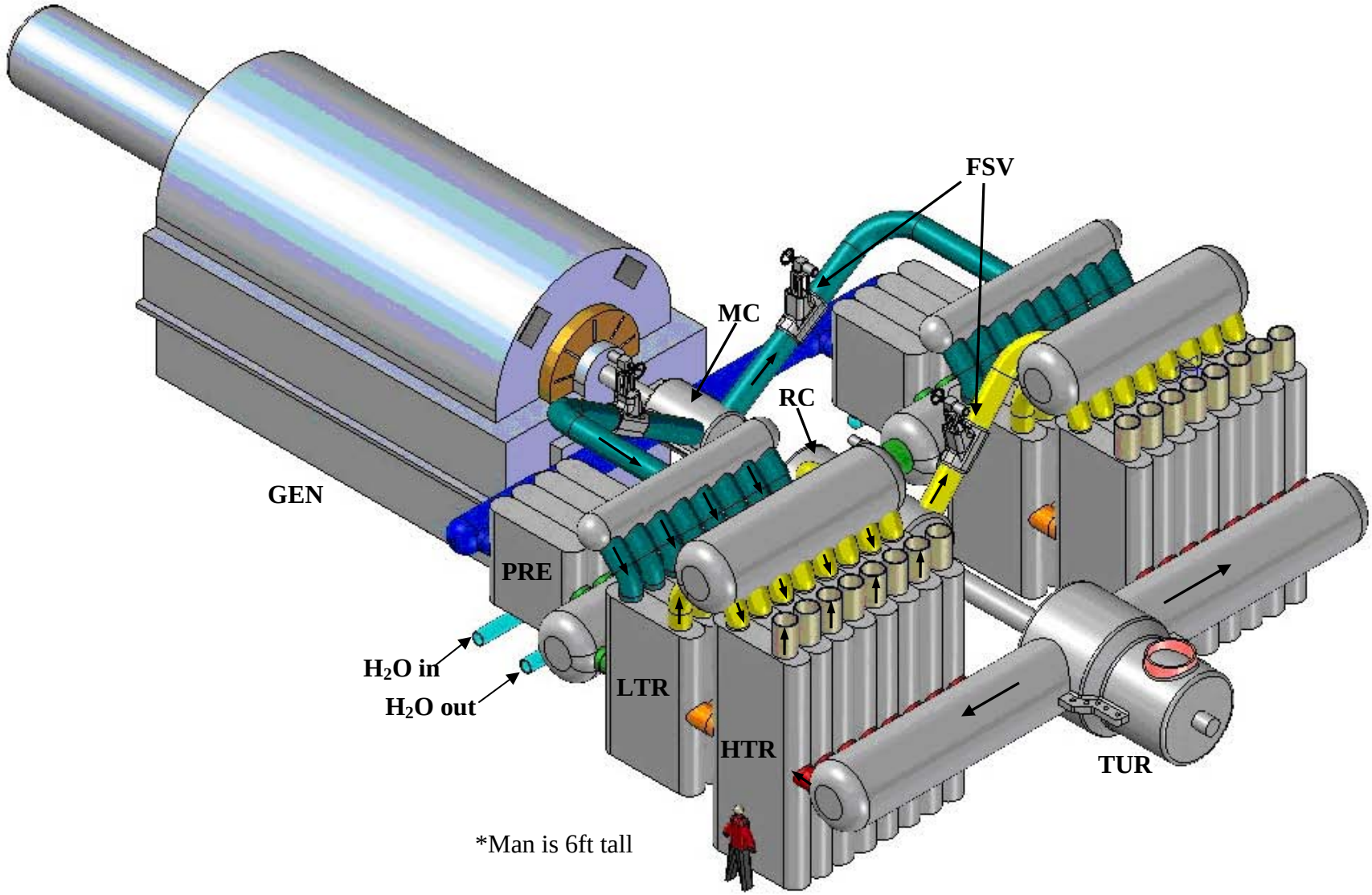

Fig. 3.9 300 MWe PCS layout (isometric view)

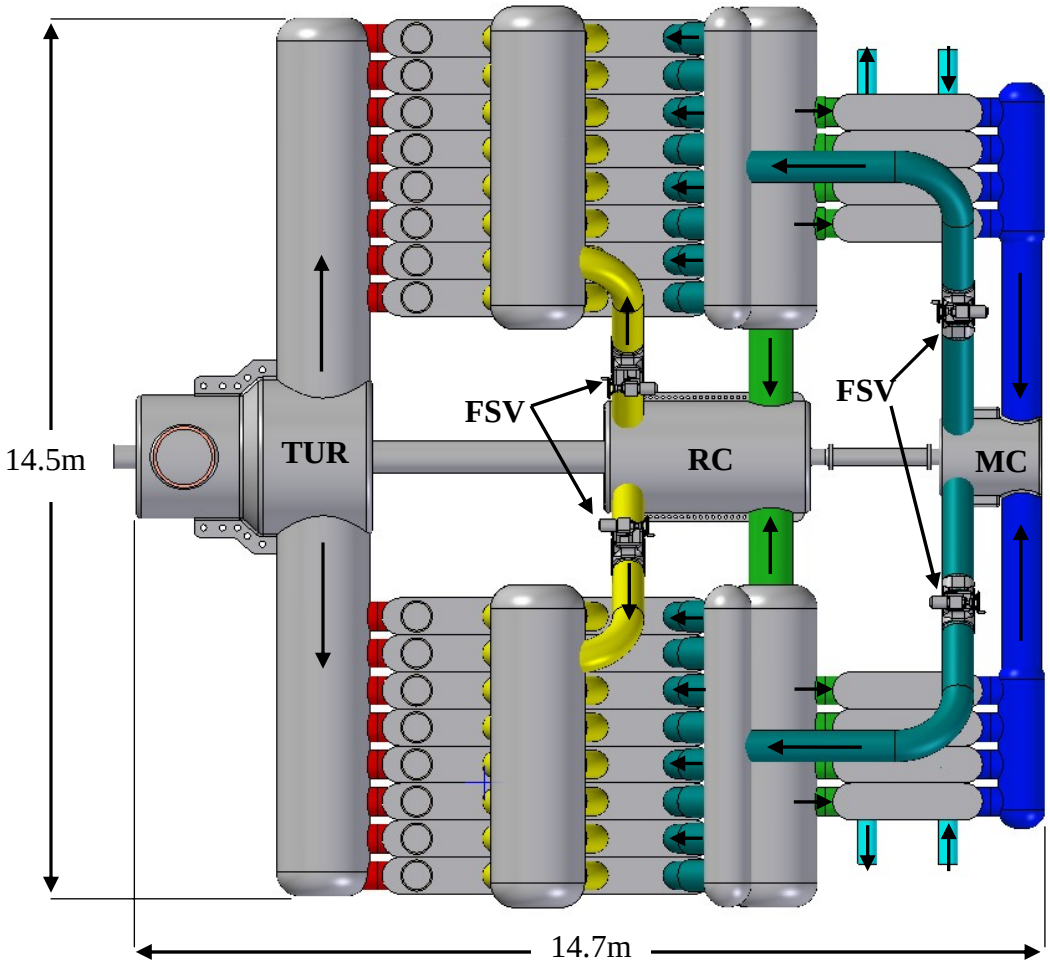

Fig. 3.10 300MWe PCS layout (top view)

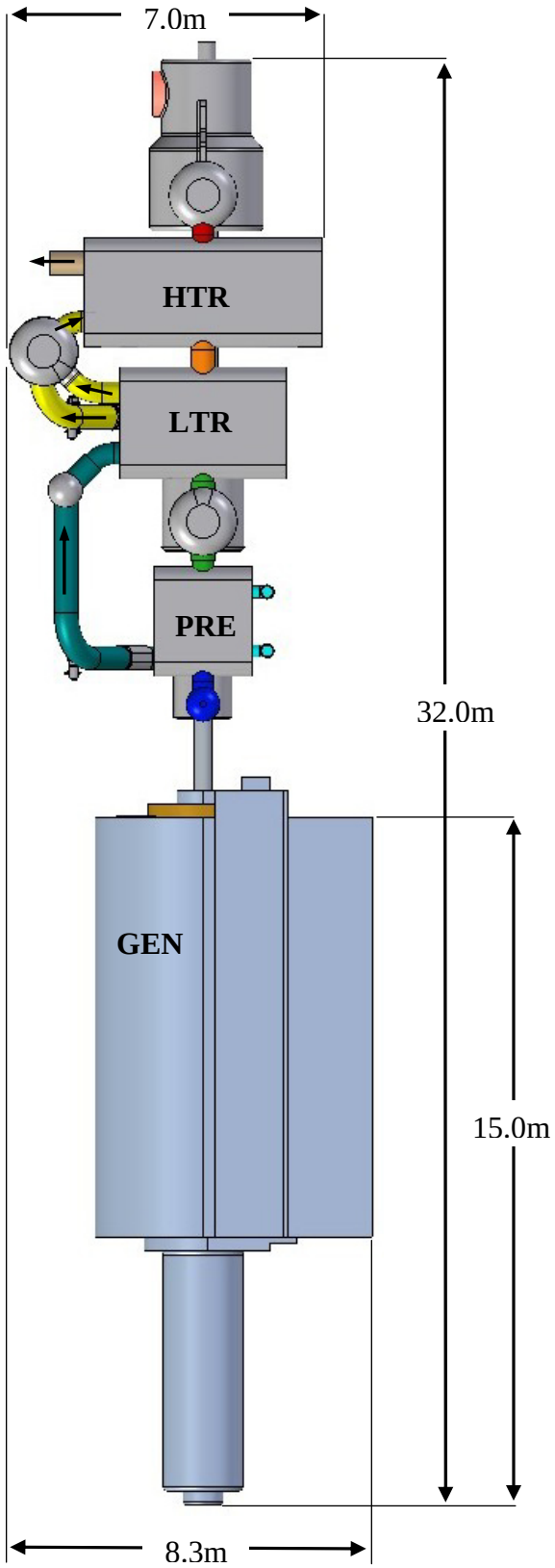

Fig. 3.11 300MWe S-CO_2 power conversion system, side view

3.4.1 Component Mass Estimates for 300 MWe PCS

The mass estimate for each power rating was broken down according to each component. All of the material in each system was assumed to be stainless steel except for the precooler which was assumed to be made of titanium to allow for salt water exposure. The masses of the valves were obtained from an Atwood and Morrill valve catalog [3-1], and all are 20 inch valves unless noted otherwise. These estimates do not include the heat exchanger spacers, cooling water piping to the precooler, cooling water pump, generator, insulation, or support structures. Component mass estimates are given in the set of Tables 3.4.

Table 3.4a– Heat exchanger (PCS) mass estimates for 300MWe PCS

Element	Material	Number	Height (m)	Total Mass (M.T.)
HTR				
LP plenum	S.S.	32	5.30	15.70
HP plenum	S.S.	32	5.30	147.0
Core	S.S.	2	5.30	200.0
Total				362.4
LTR				
LP plenum	S.S.	32	3.75	11.10
HP plenum	S.S.	32	3.75	104.0
Core	S.S.	2	3.75	148.0
Total				263.1
PRE				
LP plenum	titanium	8	2.20	1.86
HP plenum	titanium	8	2.20	17.4
Core	titanium	2	2.20	23.0
Total				42.3
Grand Total				**668.0 M.T.**

Table 3.4b– Intermediate heat exchanger mass estimate for 300MWe PCS

Element	Material	Number	Height (m)	Total Mass (M.T.)
IHX				
LP plenum	S.S.	32	1.35	7.80
HP plenum	S.S.	32	1.35	37.40
Core	S.S.	16	1.35	117.0
Grand Total				**162.0 M.T.**

Table 3.4c– Turbomachinery mass estimate for 300MWe PCS

Element	Material	Number	Total Mass (M.T.)
Turbine	S.S.	1	19.5
Recompressing Compressor	S.S.	1	15.0
Main Compressor	S.S.	1	3.50
Grand Total			**38.0 M.T.**

*Shaft masses are included in the turbomachine's mass

Table 3.4d– Pipe and valve mass estimate for 300MWe PCS

Element	Material	Number	Length (m)	Total Mass (kg)
IHX to TUR				
Pipe from collector to junction	S.S.	2	6.0	13750
Pipe from junction to turbine	S.S.	1	7.0	6400
TUR to HTR				
Diffuser	S.S.	2	6.0	11200
Pipes to HTR	S.S.	16	0.35	900
HTR to LTR				
Pipes to LTR	S.S.	16	0.60	1500
LTR to PRE				
Collector	S.S.	2	5.10	10200
Pipes to collector	S.S.	16	0.30	800
Pipes to PRE	S.S.	8	0.40	450
LTR to RC				
Pipes from collector to RC	S.S.	2	1.0	440
PRE to MC				
Pipes to collector from PRE	S.S.	2	0.40	500
Collector	S.S.	2	2.50	2550
Pipe from collector to MC	S.S.	2	2.90	1150
MC to LTR				
Pipe from MC to collector	S.S.	2	7.60	2400
20 inch valve	S.S.	2		7400
Collector	S.S.	2	5.10	10200
Pipes to LTR from collector	S.S.	16	1.10	2750
RC to HTR				
Pipe from RC to collector	S.S.	2	4.70	1450
Valve	S.S.	2		7400
Collector	S.S.	2	5.10	10200
Pipes to HTR from collector	S.S.	16	0.50	1150
LTR to HTR				
Pipes from LTR to collector	S.S.	16	1.30	3300
HTR to IHX				
Pipes to IHX	S.S.	16	6.60	35500
Piping Grand Total				**132.0 M.T.**

*Mass values represent the total mass for the pipe sections, not individual pieces
*The densities for all the mass calculations were 7900 kg/m^3 for stainless steel and 4506 kg/m^3 for titanium

Total power conversion mass estimate: 1005 metric tons

The heat exchangers (including the IHX) are approximately 83.2% of the total weight
The turbomachines are approximately 3.8% of the total weight
The pipes and valves are approximately 13.0% of the total weight

3.5 Third Generation Layout - 150MWe Layout

The 150MW$_e$ power conversion unit layout is essentially the same as for the 300MWe layout except for use of only one heat exchanger train. However, to achieve 150MWe it is also possible to use the same layout as for the 300MWe PCS, but only have each train rated for 75MWe. This would have the same shape as the 300MWe layout in Fig. 3.11, albeit smaller. Another possibility is to place the recuperator train beneath the turbomachinery which will make a symmetrical layout and considerably reduce the footprint. The most challenging aspect of placing the heat exchangers directly beneath the turbomachinery is how to handle the turbine discharge to the HTR and will have to be further explored if this layout is considered. The single train 150MWe power conversion unit layout can be seen in Figs. 3.12 through 3.14.

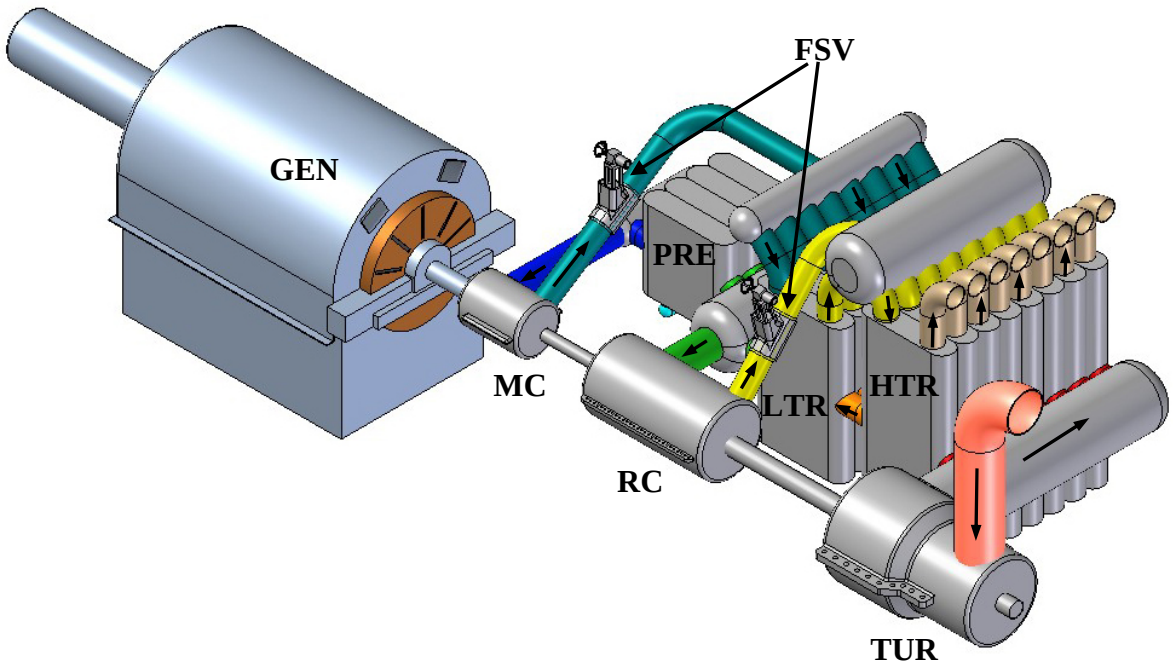

Fig. 3.12 150MWe single train S-CO_2 power conversion system, isometric view

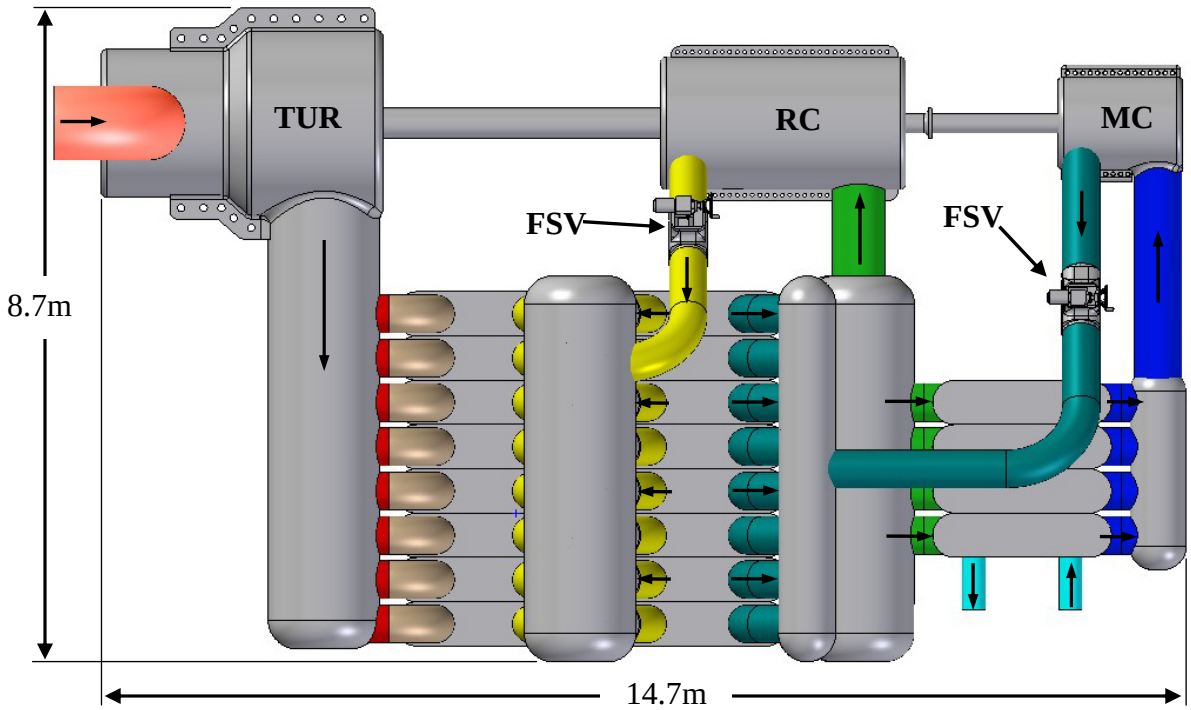

Fig. 3.13 150MWe S-CO_2 power conversion layout, top view

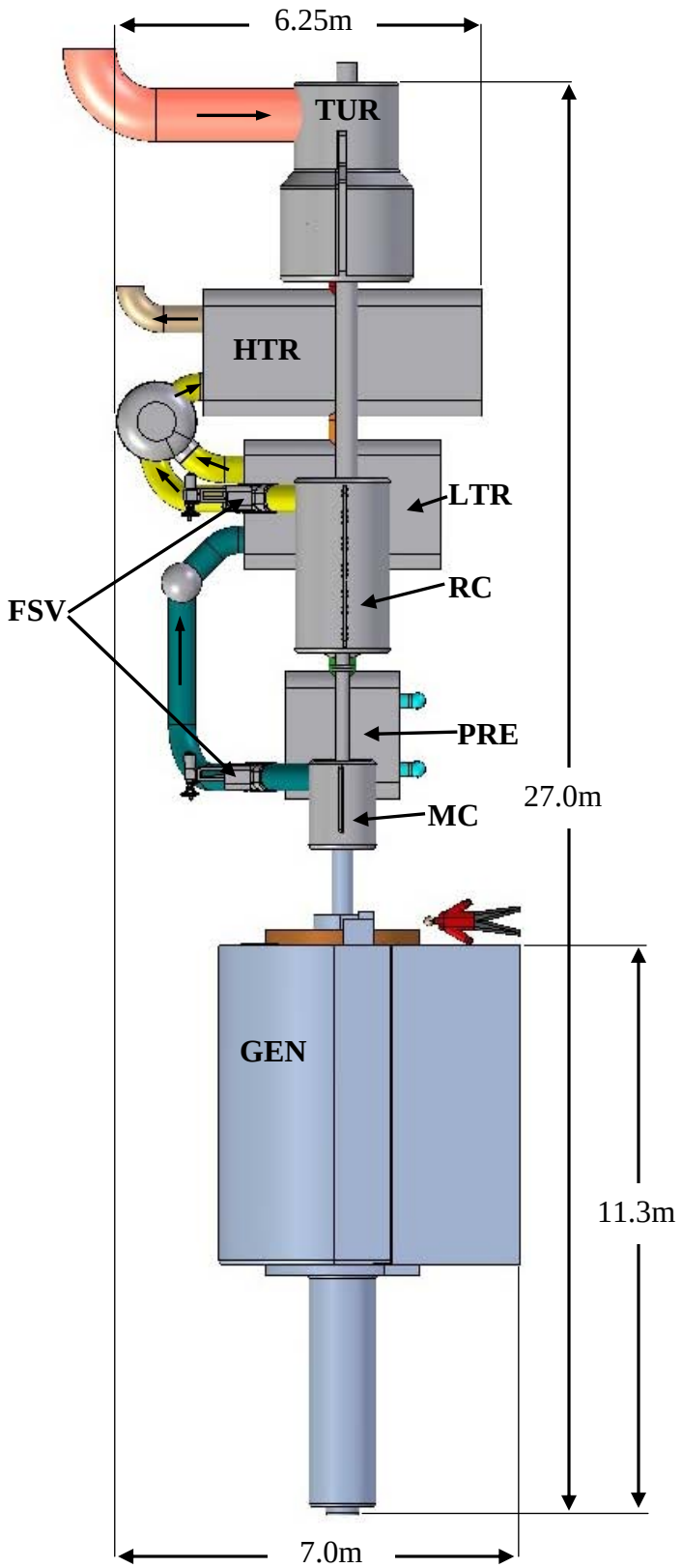

Fig. 3.14 - 150MWe S-CO_2 power conversion layout with generator, side view

3.5.1 Piping Loss Breakdown for 150MWe PCS Train

The 150MWe layout also served as the reference for calculating the pressure losses for the cycle. The pressure losses for the 300MWe cycle are nearly identical to the 150MWe layout because it is essentially two 150MWe layouts in parallel. Hence, the pressure loss per mass flow rate of CO_2 is the same for both PCS layouts. Pressure losses are itemized in Table 3.5a for the pipes and Table 3.5b for the heat exchangers.

Table 3.5a– Itemized piping pressure loss for 150MWe PCS train

Pipe Section	Diameter (m)	Length (m)	# of Pipes	# of Bends	Pressure Drop (kPa)
IHX to TUR	1.0	15.0	1	3	39.22
TUR to HTR	0.3997	0.25	8	0	39.26
HTR to LTR	0.508	0.50	8	0	36.00
LTR to split T	0.3997	0.57	8	0	12.75
Split T to RC	0.6604	3.56	1	0	5.65
Split T to PRE	0.3997	1.0	4	0	28.20
PRE to MC	0.5080	4.0	1	1	30.60
MC to LTR	0.6350	7.5	1	1	21.23
LTR to Merge T	0.3997	2.0	8	1	10.45
RC to Merge T	0.508	4.30	1	1	28.71
Merge T to HTR	0.508	0.55	8	1	25.21
HTR to IHX	1.0	6.25	8	3	60.96

Total piping pressure drop = 338 kPa

The above pressure losses can change slightly depending on the final chosen pipe sizes and lengths for each run, size of collectors, the softness of entrance bends, and the radius of pipe bends. However, the total pressure loss can be kept to a minimum with proper planning.

Pressure losses in each heat exchanger, including the losses in plena are listed in Table 3.5b. It can be seen that plena on HTR high pressure side incur larger pressure loss than the active core. On the other hand, plena on the HTR hot side have smaller pressure loss than the channels.

Table 3.5b– Itemized heat exchanger pressure losses for 150MWe PCS train

Recuperator	**Pressure Drop (kPa)**
High Temp Recuperator (hot active length)	60.46
High Temp Recuperator (cold active length)	45.04
High pressure inlet	21.00
High pressure outlet	53.72
Low pressure inlet	13.78
Low pressure outlet	6.69
Low Temp Recuperator (hot active length)	87.96
Low Temp Recuperator (cold active length)	18.72
High pressure inlet	3.38
High pressure outlet	7.19
Low pressure inlet	7.63
Low pressure outlet	4.81
Precooler (active length)	30.60
CO_2 Inlet	16.84
CO_2 Outlet	4.72
Reactor/Intermediate Heat Exchanger	500*

Total Recuperators and Precooler Pressure Loss = 383kPa+500kPa
*500 kPa was assumed for reactor/IHX.

To show the effect of pressure losses in various cycle passages on cycle efficiency, calculations were made for the following cases:

- PCS with only heat exchangers active core pressure losses (ideal pipes and plena) – cycle net efficiency = 48.7%
- PCS with only heat exchanger pressure losses that include plena (ideal pipes) – cycle net efficiency = 48.4%
- PCS with all pressure losses accounted for - cycle net efficiency = 48.0%

<u>Therefore, the losses in pipes are responsible for almost the same cycle efficiency loss as PCHE plena.</u>

Component mass estimates are given in the set of Tables 3.6.

3.5.2 Component Mass Estimates for 150 MWe PCS

Table 3.6a– Heat exchanger mass estimate for 150MWe PCS train

Element	Material	Number	Height (m)	Total Mass (M.T.)
HTR				
LP plenum	S.S.	32	5.30	7.85
HP plenum	S.S.	32	5.30	73.50
Core	S.S.	2	5.30	116.0
Total				197.0
LTR				
LP plenum	S.S.	32	3.75	5.50
HP plenum	S.S.	32	3.75	52.0
Core	S.S.	2	3.75	93.0
Total				150.0
PRE				
LP plenum	titanium	8	2.20	0.90
HP plenum	titanium	8	2.20	8.70
Core	titanium	2	2.20	14.30
Total				24.0
Grand Total				**371.0 M.T.**

Table 3.6b– IHX mass estimate for 150MWe PCS train

Element	Material	Number	Height (m)	Total Mass (M.T.)
IHX				
LP plenum	S.S.	16	1.35	3.90
HP plenum	S.S.	16	1.35	18.70
Core	S.S.	8	1.35	58.50
Grand Total				**81.0 M.T.**

Table 3.6c– Turbomachinery mass estimate for 150MWe PCS train

Element	Material	Number	Total Mass (M.T.)
Turbine	S.S.	1	19.5
Recompressing Compressor	S.S.	1	15.0
Main Compressor	S.S.	1	3.5
Grand Total			**38.0 M.T.**

*Shaft masses are included in the turbomachine's mass

Table 3.6d– Pipe and valve mass estimate for 150MWe PCS train

Element	Material	Number	Length (m)	Total Mass (kg)
IHX to TUR				
Pipe from collector to turbine	S.S.	1	9.0	8200
TUR to HTR				
Diffuser	S.S.	1	6.0	5600
Pipes to HTR	S.S.	8	0.35	440
HTR to LTR				
Pipes to LTR	S.S.	8	0.60	750
LTR to PRE				
Collector	S.S.	1	5.10	5500
Pipes to collector	S.S.	8	0.30	400
Pipes to PRE	S.S.	4	0.40	230
LTR to RC				
Pipes from collector to RC	S.S.	1	1.0	220
PRE to MC				
Pipes to collector from PRE	S.S.	1	0.40	250
Collector	S.S.	1	2.50	1350
Pipe from collector to MC	S.S.	1	2.90	550
MC to LTR				
Pipe from MC to collector	S.S.	1	7.60	1200
20 inch valve	S.S.	1		3700
Collector	S.S.	1	5.10	5500
Pipes to LTR from collector	S.S.	8	1.10	1400
RC to HTR				
Pipe from RC to collector	S.S.	1	4.70	750
Valve	S.S.	1		3700
Collector	S.S.	1	5.10	5500
Pipes to HTR from collector	S.S.	8	0.50	575
LTR to HTR				
Pipes from LTR to collector	S.S.	8	1.30	1650
HTR to IHX				
Pipes to IHX	S.S.	1	6.60	17800
Piping Grand Total				**65.0 M.T.**

*Mass values represent the total mass for the pipes, not individual pieces
*The densities for all the mass calculations were 7900 kg/m^3 for stainless steel and 4506 kg/m^3 for titanium
Total power conversion mass estimate: 555 metric tons

The heat exchangers (including the IHX) are approximately 81.5% of the total weight
The turbomachines are approximately 6.8% of the total weight
The pipes and valves are approximately 11.7% of the total weight

3.6 Third Generation Layout - 50MWe

The 50MWe power conversion layout is very similar to the 20-25MWe layout except that it needs two parallel high and low temperature recuperators connected by a manifold. This was necessary to keep the overall height of the conversion unit to a minimum and limit the distance the fluid travels within each recuperator. At this power rating, the precooler is still small enough to keep it as one module. The turbomachinery is currently shown beneath the heat exchangers, but the PCS can be rotated to have the turbomachinery on top if an adequate foundation/frame is developed. The 50MWe PCS can be seen in Figs. 3.15 through 3.17 and the component mass estimates are in Table set 3.7.

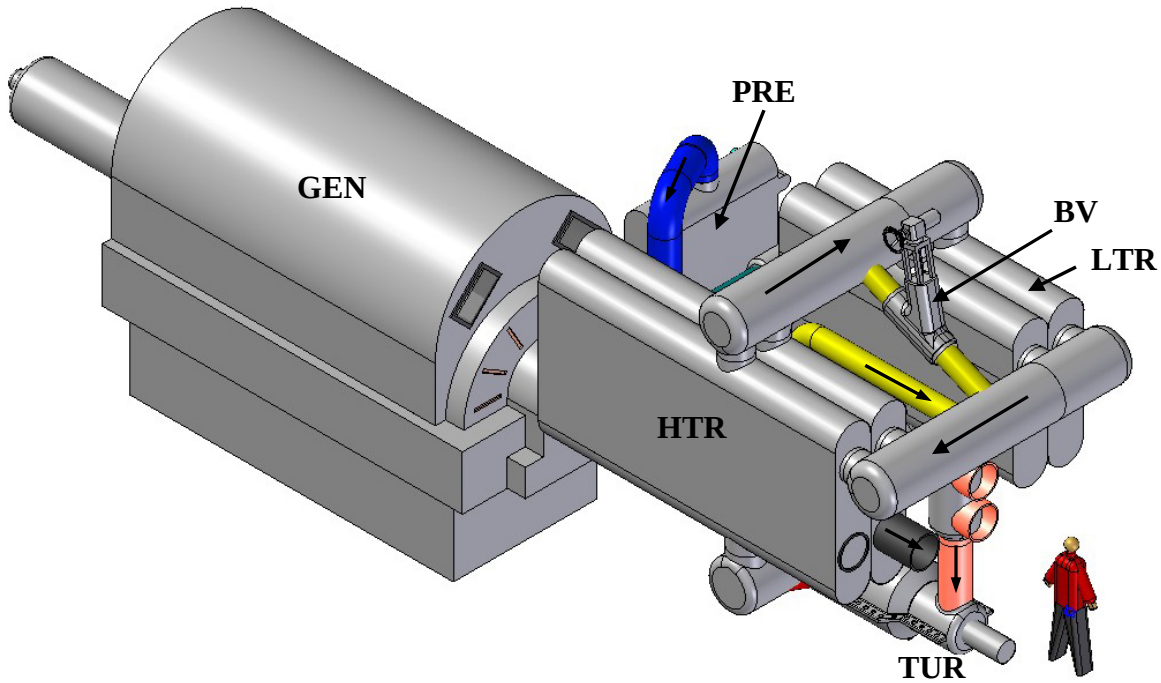

Fig. 3.15 50MWe PCS, isometric view

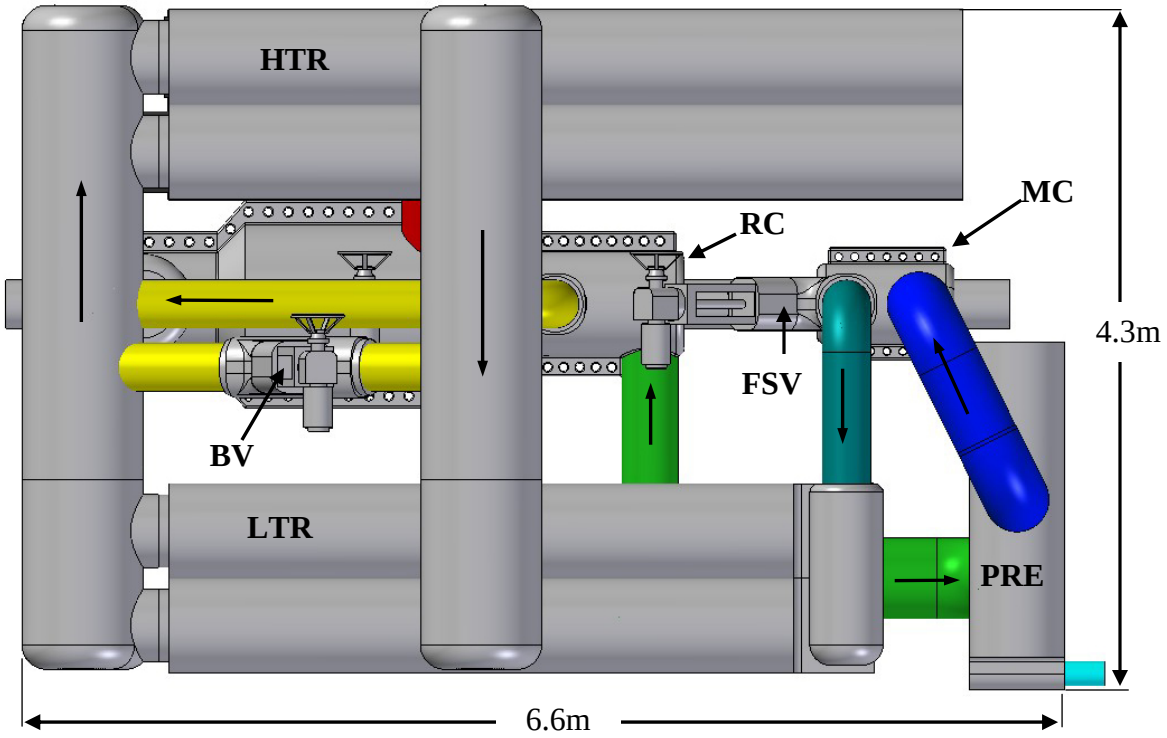

Fig. 3.16 50MWe PCS, side view

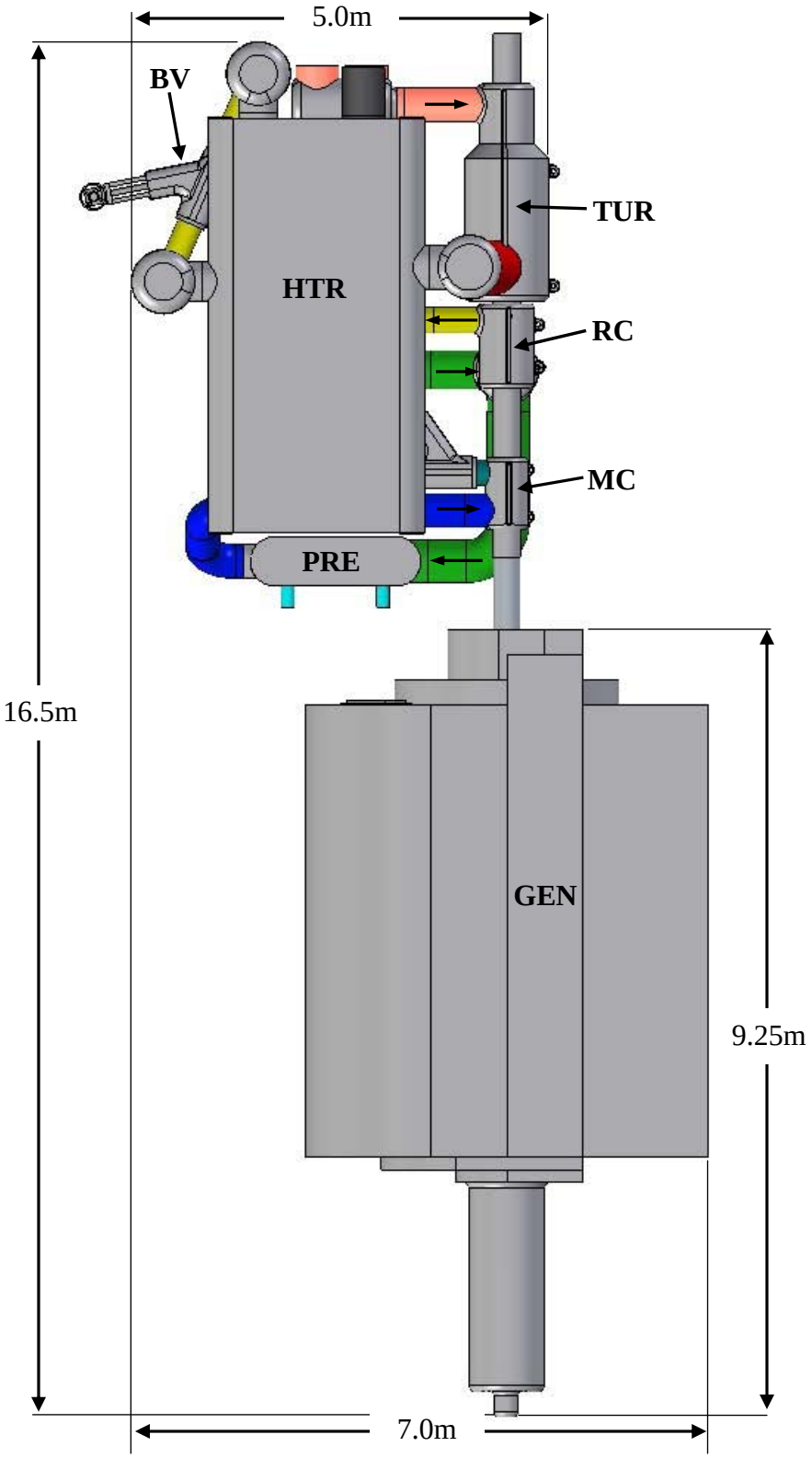

Fig. 3.17 50MWe PCS, side view

3.6.1 Component Mass Estimates for 50 MWe PCS

Table 3.7a Heat exchanger mass estimate for 50MWe PCS train

Element	Material	Number	Height (m)	Total Mass (M.T.)
HTR				
LP plenum	S.S.	32	6.0	2.20
HP plenum	S.S.	32	6.0	20.8
Core	S.S.	2	6.0	40.0
Total				63.0
LTR				
LP plenum	S.S.	32	4.72	1.75
HP plenum	S.S.	32	4.72	16.40
Core	S.S.	2	4.72	29.60
Total				47.75
PRE				
LP plenum	titanium	8	1.25	0.20
HP plenum	titanium	8	1.25	2.00
Core	titanium	2	1.25	4.75
Total				6.95
Grand Total				**118 M.T.**

Table 3.7b– IHX mass estimate for 50MWe PCS train

Element	Material	Number	Height (m)	Total Mass (M.T.)
IHX				
LP plenum	S.S.	4	0.90	1.0
HP plenum	S.S.	4	0.90	4.75
Core	S.S.	2	0.90	9.75
Grand Total				**15.5 M.T.**

Table 3.7c– Turbomachinery mass estimate for 50MWe PCS train

Element	Material	Number	Total Mass (M.T.)
Turbine	S.S.	1	4.0
Recompressing Compressor	S.S.	1	3.0
Main Compressor	S.S.	1	1.2
Grand Total			**8.2 M.T.**

*Shaft masses are included in the turbomachine's mass

Table 3.7d– Pipe and valve mass estimate for 50MWe PCS train

Element	Material	Number	Length (m)	Total Mass (kg)
IHX to TUR				
Pipes to collector	S.S.	2	0.30	200
Pipe from collector to turbine	S.S.	1	6.50	1975
Collector	S.S.	2	1.20	925
TUR to HTR				
Pipe to collector	S.S.	1	0.25	100
Collector	S.S.	1	1.20	550
Pipes to HTR	S.S.	2	0.25	75
HTR to LTR				
Pipes to collector from HTR	S.S.	2	0.25	75
Collector	S.S.	1	4.20	1350
Pipes from collector to LTR	S.S.	2	0.25	75
LTR to PRE				
Pipes to collector from LTR	S.S.	1	5.10	400
Collector	S.S.	1	1.20	925
Pipes from collector to PRE	S.S.	1	2.60	400
LTR to RC				
Pipes from collector to RC	S.S.	1	1.10	100
PRE to MC				
Pipes from PRE to MC	S.S.	1	4.80	600
MC to LTR				
Pipe from MC to collector	S.S.	1	2.90	265
12 inch valve	S.S.	1		1620
Collector	S.S.	1	1.10	175
Pipes to LTR from collector	S.S.	2	0.25	75
RC to HTR				
Pipe from RC to collector	S.S.	1	2.90	265
12 inch valve	S.S.	1		1620
Collector	S.S.	1	5.10	2300
Pipes to HTR from collector	S.S.	2	0.25	75
LTR to HTR				
Pipes from LTR to collector	S.S.	2	0.25	75
HTR to IHX				
Pipes to IHX	S.S.	2	3.90	2375
Piping Grand Total				**16.50 M.T.**

Total assembly weight ≈ 158 M.T.

The heat exchangers (including the IHX) are approximately 84.5% of the total weight
The turbomachines are approximately 5.0% of the total weight
The pipes and valves are approximately 10.5% of the total weight

3.7 Third Generation Layout - 20-25MWe

The 20MWe layout was the first power conversion unit to be designed using SOLID EDGE in conjunction with CYCLES and is considerably different than the large power rating layouts in that it is able to use only one standard HEATRIC™ heat exchanger module. This enables the complete conversion unit to be very compact and have the turbomachinery closely nested in between the high and low temperature recuperators. The flow paths between and inside the heat exchangers is the same as in the larger rating PCS, with the low pressure fluid using the outside plenum and the high pressure fluid flowing through the inside plenum. However, there are several minor differences that deserve mention. The 20MWe layout is the simplest layout in that it has no collection manifolds or distribution chambers and because it is able to use one heat exchanger module there is no concern over evenly distributing the flow between modules. The turbine is modeled with a very long diffuser to increase the total-to-static efficiency. Also, in the figures which follow, a 20MWe permanent magnet generator is included to show the relative size of the generator as compared to a 6ft tall man and to the rest of the power conversion components. Depending on the method of partial load control, the cycle has further room for efficiency improvement. If a method other than a high-to-low pressure bypass between the HTR and LTR is used, it is possible to add one or more additional pipes between the recuperators to cut down on the pressure losses on the low pressure side of the system.

An interesting aspect of the smaller power ratings (below about 50MWe) is the use of a vertical arrangement for the turbomachinery train. Depending on the overall thrust and weight of the turbomachinery, the entire power conversion layout may be able to stand upright, resulting in a tiny footprint. The bearing design/selection is outside the scope of this report, but is a feature that should be explored at a later point.

The 25MWe layout may be considered as a straightforward expansion of the 20MWe system. The optimum heat exchanger core lengths do not change, only the height will expand linearly to accommodate the extra volume.

The 20-25MWe PCS layouts are shown in Figs. 3.18 through 3.21 and the masses are listed in Table set 3.8. Also, a comparison between a 20MWe permanent magnet generator and a 20MWe wound rotor generator is shown in Fig. 3.22.

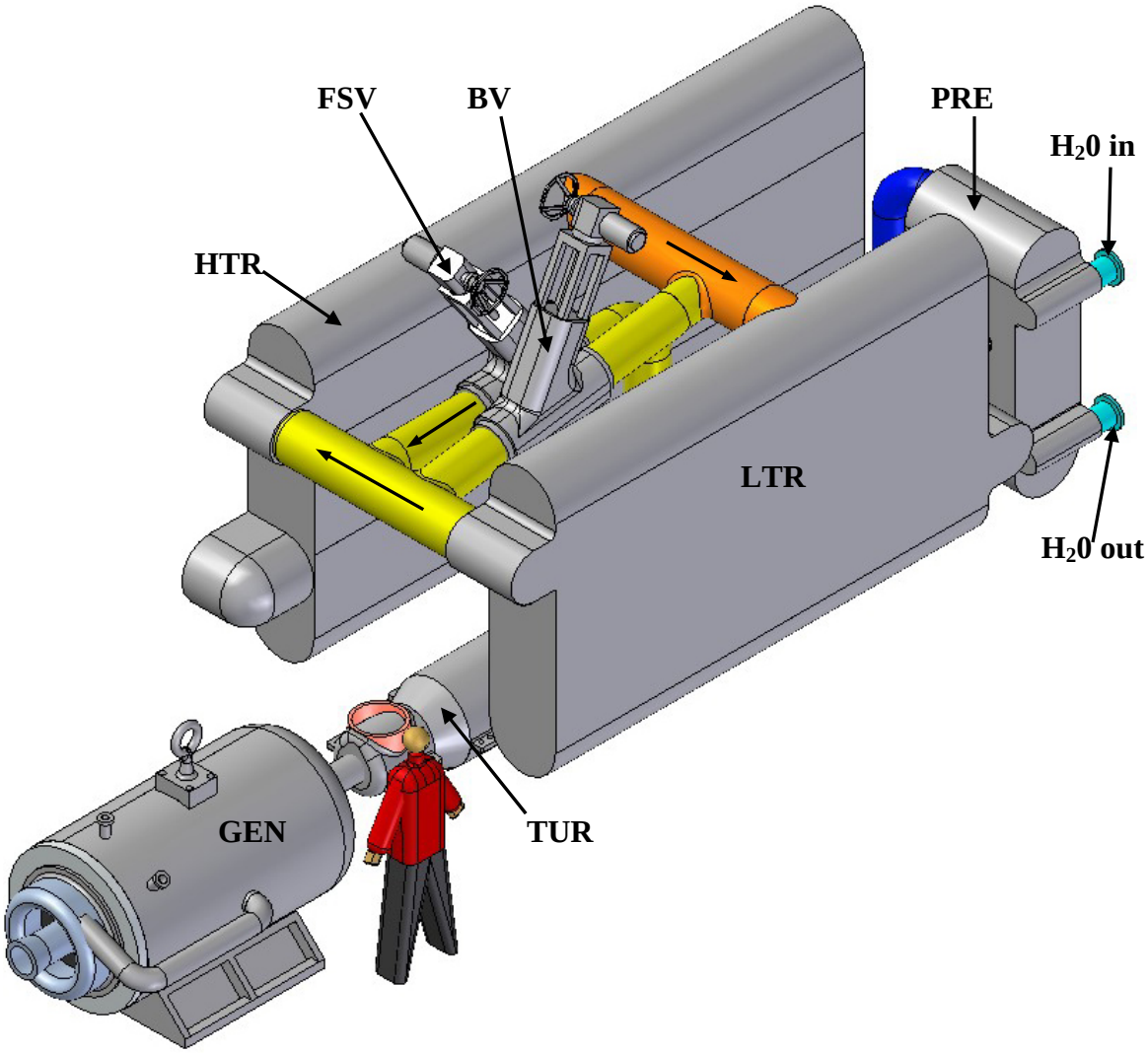

Fig. 3.18 20MWe PCS with PM generator (isometric view)

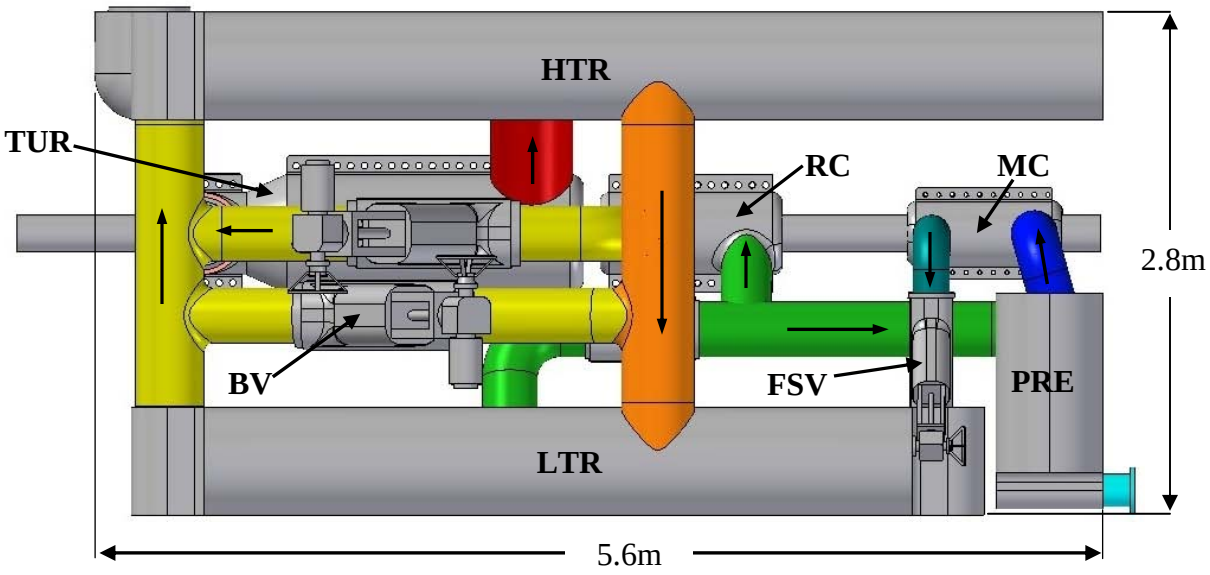

Fig. 3.19 20MWe PCS (top view)

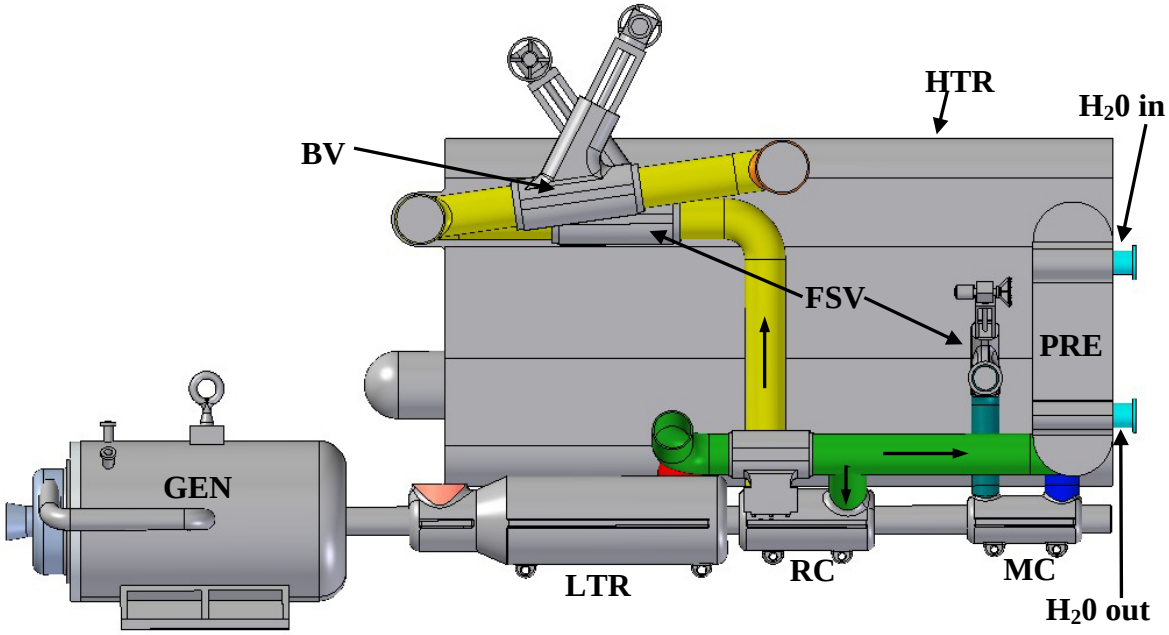

Fig. 3.20 20MWe PCS with PM generator (side view), LTR removed to allow nested components to be visible

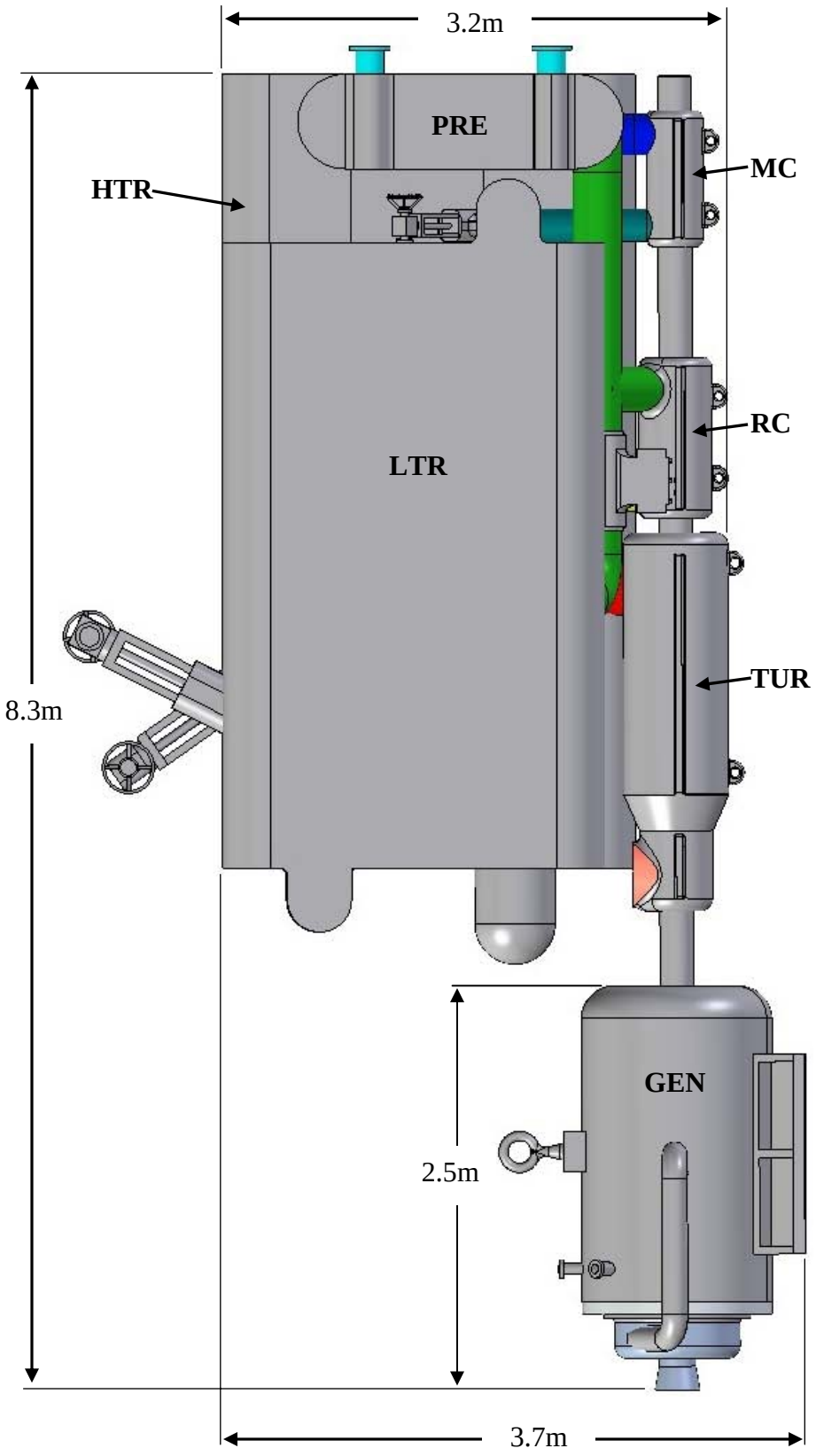

Fig. 3.21 20MWe PCS with permanent magnet generator (side view)

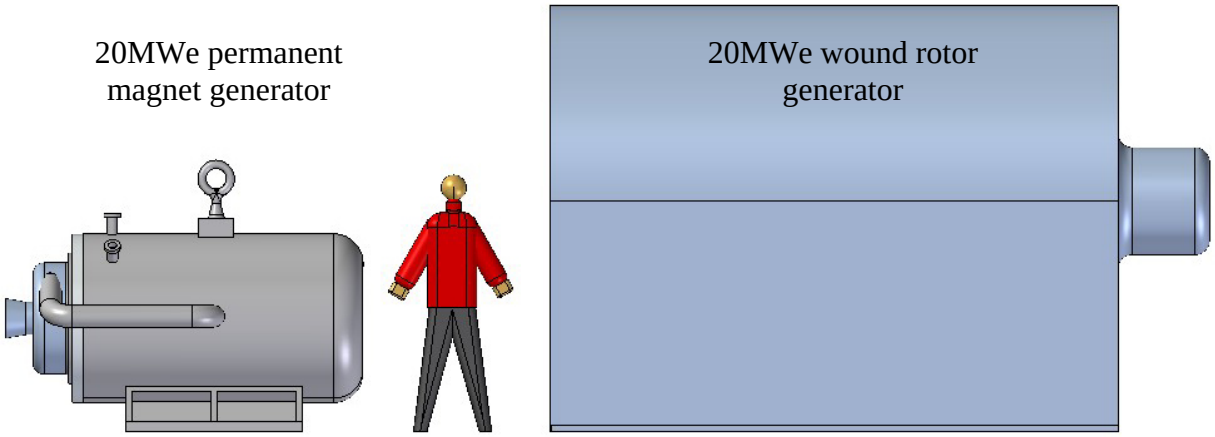

Fig. 3.22 Permanent magnet vs. conventional generator comparison

3.7.1 Component Mass Estimates for a 20MWe PCS train

Table 3.8a– Heat exchanger (PCS) mass estimate for 20MWe PCS train

Element	Material	Number	Height (m)	Total Mass (M.T.)
HTR				
LP plenum	S.S.	32	6.0	0.90
HP plenum	S.S.	32	6.0	8.70
Core	S.S.	2	6.0	16.0
Total				25.60
LTR				
LP plenum	S.S.	32	4.72	0.75
HP plenum	S.S.	32	4.72	6.85
Core	S.S.	2	4.72	11.85
Total				19.50
PRE				
LP plenum	titanium	8	1.25	0.05
HP plenum	titanium	8	1.25	0.50
Core	titanium	2	1.25	1.90
Total				2.45
Grand Total				**47.50 M.T.**

Table 3.8b– IHX mass estimate for 20MWe PCS train

Element	Material	Number	Height (m)	Total Mass (M.T.)
IHX				
LP plenum	S.S.	4	0.90	0.45
HP plenum	S.S.	4	0.90	2.20
Core	S.S.	2	0.90	7.60
Grand Total				**10.25 M.T.**

Table 3.8c– Turbomachinery mass estimate for 20MWe PCS train

Element	Material	Number	Total Mass (M.T.)
Turbine	S.S.	1	1.75
Recompressing Compressor	S.S.	1	0.75
Main Compressor	S.S.	1	0.50
Grand Total			**3.0 M.T.**

*Shaft masses are included in the turbomachine's mass

Table 3.8d– Pipe and valve mass estimate for 20MWe PCS train

Element	Material	Number	Length (m)	Total Mass (kg)
IHX to TUR				
Pipe to turbine	S.S.	2	3.0	2530
TUR to HTR				
Pipe to HTR	S.S.	16	0.35	110
HTR to LTR				
Pipe to LTR	S.S.	16	0.60	225
LTR to PRE				
Pipe to PRE	S.S.	8	0.40	175
LTR to RC				
Pipe from collector to RC	S.S.	2	1.10	25
PRE to MC				
Pipe from PRE to MC	S.S.	2	2.90	150
MC to LTR				
Pipe from MC to LTR	S.S.	2	7.60	75
8 inch valve	S.S.	2		525
RC to HTR				
Pipe from RC to merge T	S.S.	2	4.70	200
12 inch valve	S.S.	2		1620
LTR to HTR				
Pipe from LTR to HTR	S.S.	16	1.30	190
HTR to IHX				
Pipe to IHX	S.S.	2	5.0	440
Piping Grand Total				**6.30 M.T.**

*Mass values represent the total mass for the pipes, not individual pieces

Total assembly weight ≈ 67 M.T.

The heat exchangers (including the IHX) are approximately 86.0% of the total weight
The turbomachines are approximately 4.5% of the total weight
The pipes and valves are approximately 9.5% of the total weight

3.8 Comparing the high and low power ratings

The low power ratings have the advantage of using one or two of each heat exchanger module per power conversion unit and not having the pipe sizes being a limiting factor in the design. However, the downside to the lower power ratings is the slightly lower turbomachinery efficiencies. If a power rating smaller than 20MWe is desired, the layout will be the same as for the indicated 20MWe layout, but the overall length will shrink linearly with power. The transition between the high and low power

rating layouts begins around 50MWe. The small layouts, below 50MWe, resemble more of a nested configuration with the pipes running between the middle of the heat exchanger bundles. For the very small ratings (≤20MWe) the turbomachinery train can also be positioned between the heat exchangers. Above 20MWe it is suggested that the single heat exchanger (single HTR, LTR, and PRE module) be replaced by multiple modules when the overall height is greater than 6m. The multiple modules can be placed next to each other and the flow can be distributed and collected via a header system. Unless the heat exchangers are subdivided into very small units and packaged into one large vessel there are few ways to distribute the flow without a header. The layout of a single unit above 50MWe should be shifted away from the nested turbomachinery design to the parallel heat exchanger design with a single or dual train. This shift is to add a degree of simplicity to the layout to allow for easy removal of the increasingly larger turbomachines. To achieve power ratings above 50MWe with the small rating layout it is desirable to use more than one loop.

As the power ratings approach 150MWe the overall length of the conversion unit will remain the same, but the width will increase as more heat exchanger modules are added. When the power ratings exceed 150MWe it is possible to maintain the single train heat exchanger approach, but it is suggested to break the unit into two parallel trains feeding into one set of turbomachinery. The reason for this is simple: to more efficiently handle the pressure losses with fewer long piping runs. However, this will also cause the conversion unit to be slightly more expensive with respect to the initial capital investment due to the additional piping.

3.9 Attaching the intermediate heat exchanger

Attaching the intermediate heat exchanger is very important because if done improperly it can result in a several percent loss on overall efficiency. Attaching the IHX to the 150MWe power rating proved to be quite trivial, with only one large feed pipe connected to the turbine inlet. However, connecting the IHX to the 300MWe unit can be complicated because of the need to accommodate the two large turbine inlet pipes.

The IHX connecting the reactor to the power conversion cycle is modeled for liquid metal/gas heat transfer with a 550˚C turbine inlet temperature and the primary coolant being 20˚C above the secondary coolant outlet temperature. Sodium was used as a liquid metal since current GNEP efforts are focused on sodium cooled burners. Because sodium has high conductivity and it is desirable that its passage through small 2mm channels is smooth to prevent potential blockage, straight channels were used. Although 550°C is not an exact match with the depicted 650˚C turbine inlet PCS layouts, the only change in appearance would be in the height and length of the IHX. However, any appearance changes will be small. If a gas cooled reactor was used the IHX would be a gas/gas heat transfer and zigzag channels would be used instead of straight channels. The overall volume would only slightly increase because the power density for a CO_2/CO_2 exchanger is approximately 27MW/m^3 and the Na/CO_2 unit is approximately 28MW/m^3.

Using the Na/CO_2 unit as the reference design, the CO_2/CO_2 exchanger would change in appearance by reducing the overall length because of the zigzag channel arrangement, but increase in overall height. Regardless, the depicted arrangement of the IHX should not affect the rest of the power conversion component layout, but will slightly reduce the overall footprint.

The high power density in the sodium/CO_2 IHX makes it quite compact. To keep the overall height of the IHX to 5m or less the unit could be broken into three modules. However, the issue of connecting the eight HTR modules to three IHX modules then has to be addressed. By using eight IHX modules the overall footprint is only marginally increased, and the CO_2 distribution between the IHX and HTR is easily handled. Also, the repairability of this arrangement is significantly better in terms of accessibility and easier than if distribution and collection manifolds were employed. Hence, the IHX is arranged for both the 150 and 300MWe layouts by creating the same number of modules as the high temperature recuperator. This method allows a parallel configuration to be used, thus enabling the use of many parallel pipes connecting the two heat exchangers. The other option to connect the HTR to the IHX would be to feed the CO_2 into a large collector manifold from the HTR with fewer and larger pipes leading from the collector to the IHX. Currently, the IHX is connected to the HTR via multiple 20 inch inner diameter pipes. The many pipe options facilitate later adjustments for thermal expansion and stresses which would be quite difficult with one or two very large diameter pipes. Moreover, the 20 inch inner diameter pipes are readily available for purchase which circumvents the unresolved issue of available large diameter high pressure, high temperature pipes. It is also noted that IHX pressure drop on the CO_2 side is only one half of the pressure drop assumed in the cycle calculations (250kPa versus 500kPa), hence cycle efficiency can be increased from 48% to 48.5%.

The CO_2 from the HTR is fed into the outside plenum of the IHX. Previously, the outside plenum was used for the low pressure fluid to limit the fractional pressure loss, but for the IHX the outside plenum is more favorable for efficiently handling the flow. Also, the heat transport and transfer efficiency of liquid sodium is much higher than CO_2; therefore, it is intuitive to route it to the inside distribution channel. The HTR feeds into the near side of the IHX in order to limit the distance traveled to reach the heat exchanger and to extend the overall length of the required turbine feed pipe. The turbine feed pipe is the largest and longest pipe in the cycle and needs to have the largest expansion loop. For the 150 and 300MWe layouts the overall length of travel from the IHX to the turbine is approximately 13m, but the total pressure loss through the collector and multiple pipe bends is approximately 50kPa (≈0.2% fractional pressure loss) and reduces the overall cycle efficiency less than 0.1% compared to that of an ideal (infinite diameter) feed pipe. The CO_2 flows through the IHX via straight channels in a counterflow pattern and is collected in a large collection manifold before being sent to the turbine via a 1m inner diameter pipe for the 150MWe rating. The core of the IHX is approximately 1.7m long, which is a result of adopting straight channels rather than zigzag channels.

Attaching the IHX to the turbine for the dual heat exchanger train layout is difficult with two individual turbine feed pipes. One solution is to have both IHX

assemblies feed the CO_2 into one turbine feed plenum. Also, moving the header outlet to the top of the collection manifold allows the feed to be removed vertically, enabling a stress-friendly expansion bend. The two IHX outlet pipes are connected together with one common turbine feed projected along the centerline to the turbine. The overall effect of choosing one turbine feed line is a negligible efficiency reduction as compared to twin feed pipes, but it allows for a simpler turbine casing design. Also, at a later stage when a detailed stress analysis is performed, the turbine feed expansion loop can easily be adjusted to make it larger or smaller to alleviate the induced stresses without affecting the overall layout and footprint of the plant.

Attaching the IHX to the smaller power ratings is slightly different than for the dual heat exchanger train layout. For the very small power ratings there is no need to break the IHX into several modules. However, as soon as the HTR is broken into more than one module it is desirable to also break the IHX into the same number of modules to allow direct discharge between modules. This allows a parallel arrangement without the need of collection manifolds. For an IHX consisting of more than one module, the turbine inlet piping can be handled several ways: create one large IHX discharge plenum for the CO_2 with one large pipe running to the turbine inlet; use a collection manifold on the outlet of the IHX plenum with one large pipe running to the turbine inlet; or have two parallel pipes running from the IHX (one pipe from each module plenum) and join the two pipes into one turbine inlet pipe shortly before the casing penetration. At this point, the best option is to use the two parallel pipes joining together. Currently, the capability of creating one large discharge plenum instead of two normal plena is unknown. The IHX outlet will be the hottest high pressure point in the cycle at 650˚C and 19.95MPa (assuming a 500kPa pressure drop thru the IHX) and should be designed on the conservative side until all of the PCHE capacities are known. The option of using a collection manifold at the IHX exit connected to one large pipe is also a feasible option. However, this needs further investigation regarding the area of the maximum size pipe capable of being attached to the turbine casing and the current maximum size of high temperature and pressure pipe available. The parallel pipe option makes the single feed pipe distance a minimum, hence the potentially smallest pressure drop.

The sodium is fed into the inside plenum of the heat exchanger via a similar pipe and distribution manifold as used in the PCS. The sodium pipes and distribution/collection manifolds are merely shown to depict a possible arrangement and have not been sized for optimum performance. Handling the sodium will not be very difficult because of the lower operating pressure and the reasonable ΔT between the two fluids keeps the operating temperature within a reasonable range. However, prevention of sodium freezing in start up and shutdown scenarios will be a complication.

The IHX is shown isolated in Figs. 3.23 and 3.24 and attached to several PCS layouts in Figs. 3.25 through 3.29.

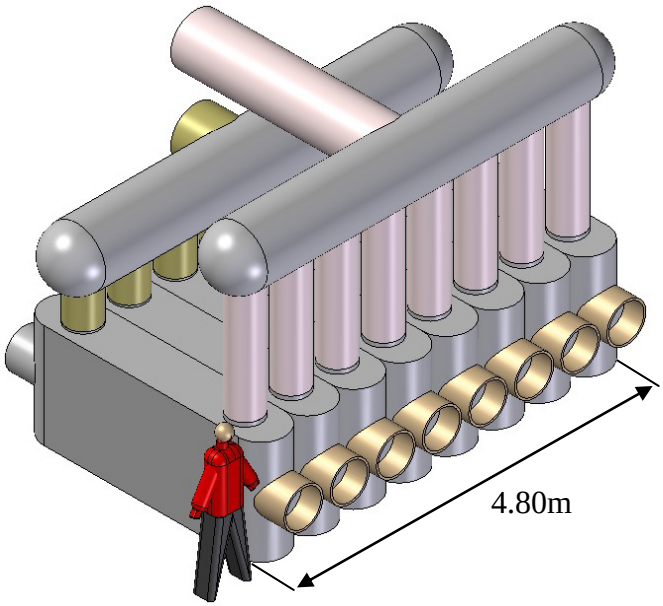

Fig. 3.23 150MWe IHX (isometric view)

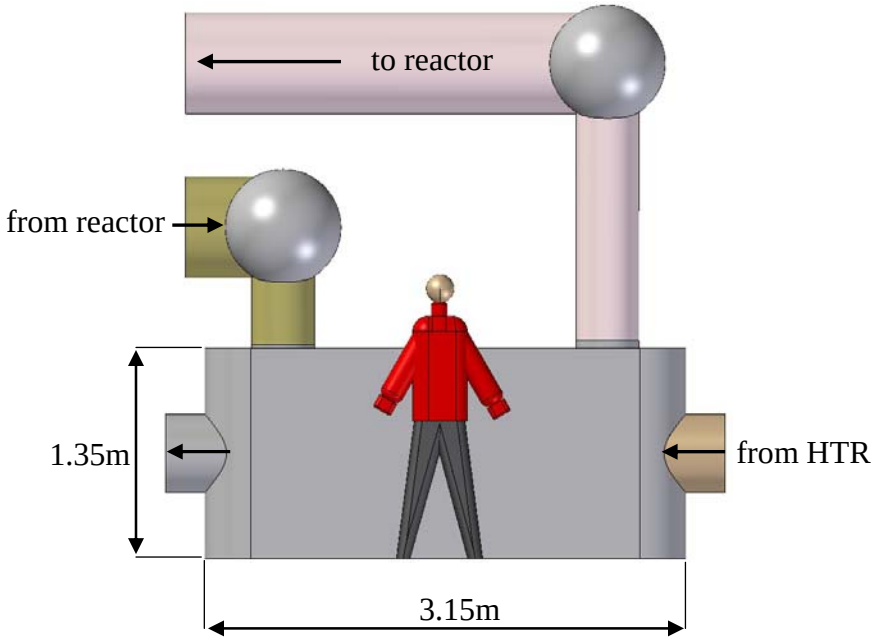

Fig. 3.24 150MWe IHX (side view)

*Weight (does not include connecting pipes and manifolds) ≈ 81 M.T.

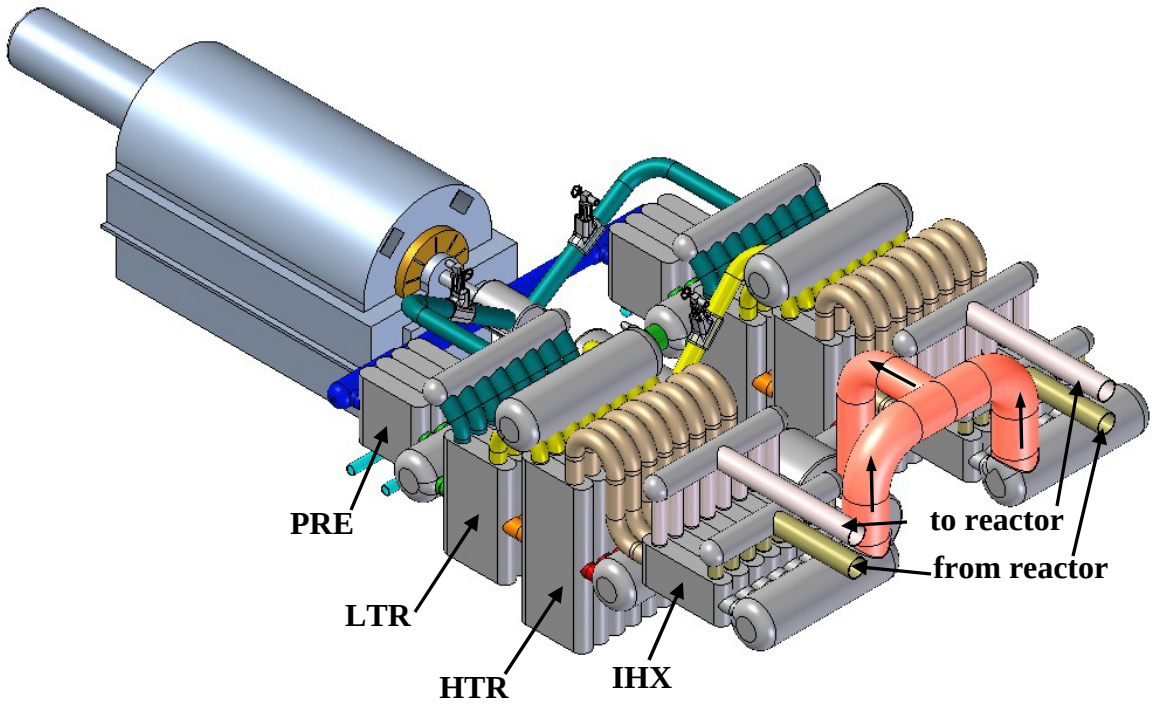

Fig. 3.25 300MWe PCS with IHX and generator with two 150MWe IHX assemblies

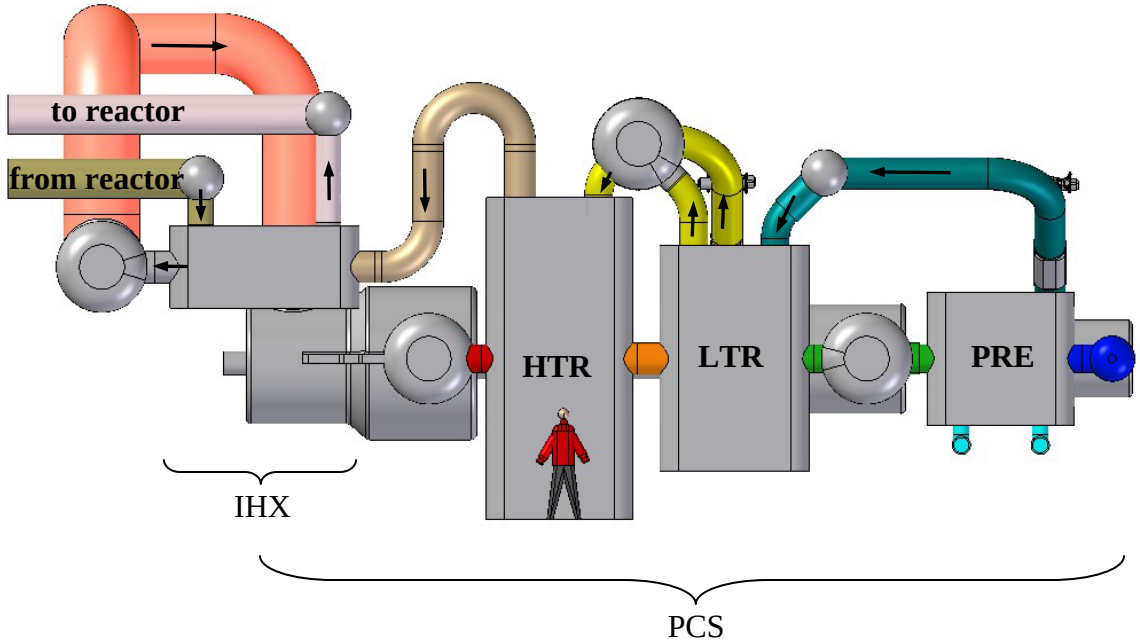

Fig. 3.26 300MWe PCS with IHX (side view)

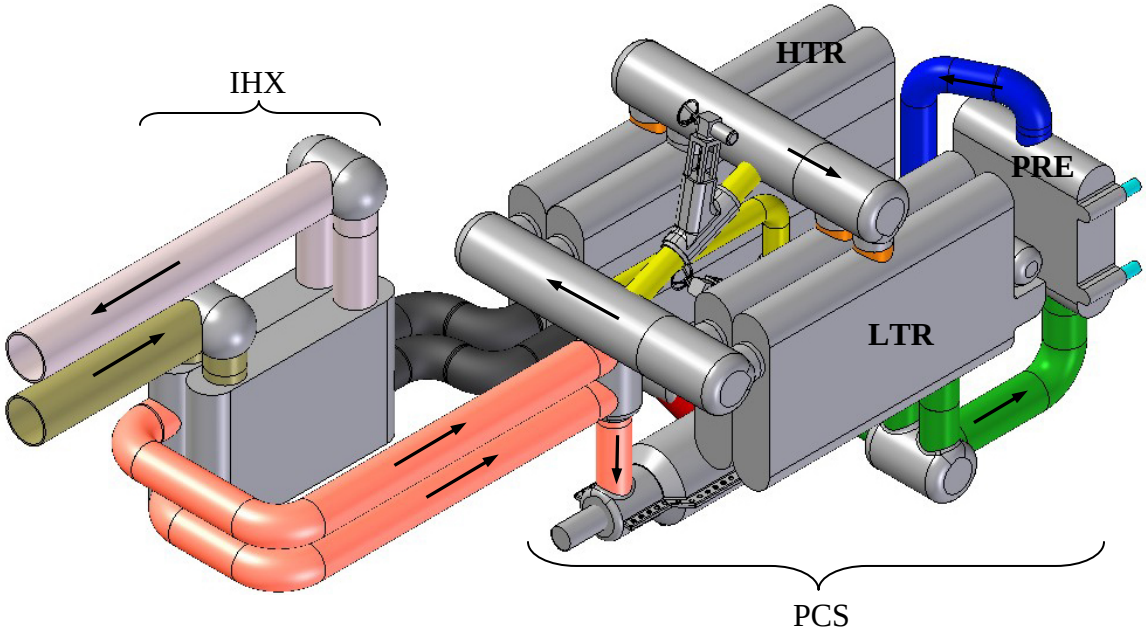

Fig. 3.27 50MWe PCS with IHX (isometric view)

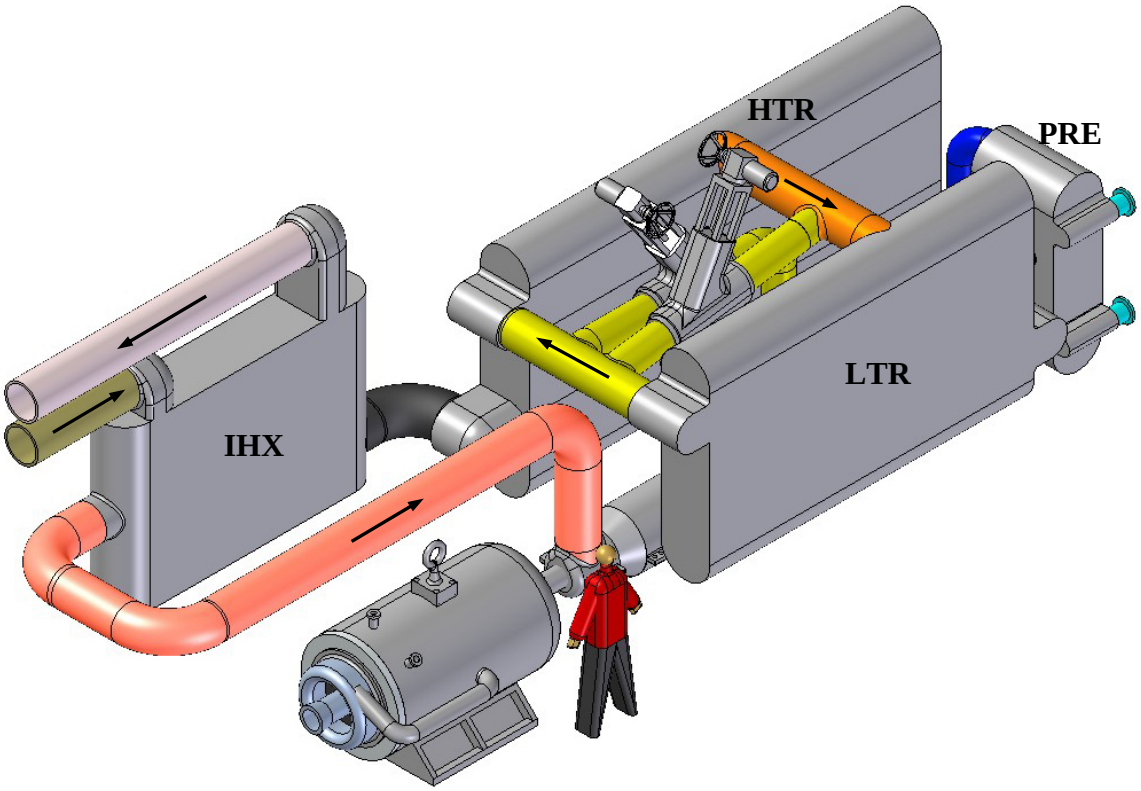

Fig. 3.28 20MWe PCS with IHX and permanent magnet generator (isometric view)

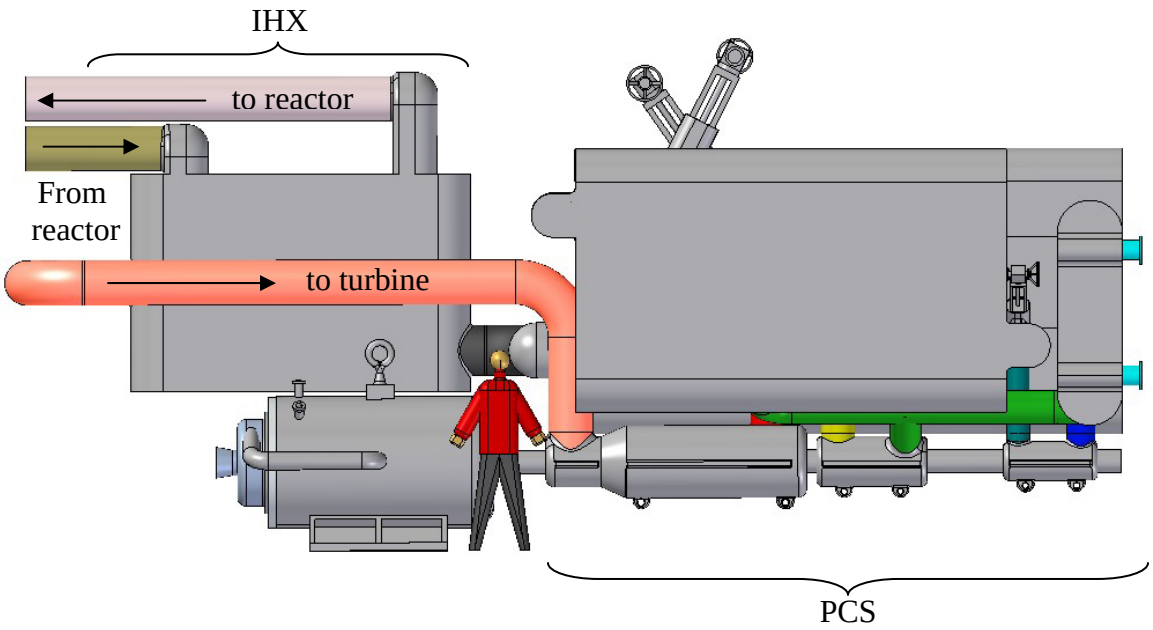

Fig. 3.29 20MWe PCS with IHX and permanent magnet generator (side view)

3.10 Extending to high reactor power ratings

There are several possible combinations to reach the peak power goal of 1200MWe: four 300MWe PCS loops each with its own set of turbomachinery (Figs. 3.30 and 3.31); two 600MWe loops utilizing two parallel 300MWe loops on one turbomachinery shaft (two turbines and four compressors) and one 600MWe generator (Figs. 3.32 and 3.33); and two 600MWe loops with two 300MWe loops stacked with one set of turbomachinery and one 1200MWe generator (Fig. 3.36).

Several more plant layouts have been considered for the power ratings on the order of 1200MWe. The most obvious and simple layout utilizes four, single shaft, 300MWe, PCS loops each connected to the reactor to obtain the desired 1200MWe rating. The reactors shown in the following figures are for illustrative purposes only and do not reflect the actual design or size of a specific reactor.

The layout utilizing four 300MWe loops, each with its own turbomachinery train and generator, exhibit the largest footprint for a 1200MWe plant. However, this cycle also is the easiest for cutting a loop in and out for partial load operation. Each load can simply be isolated from the reactor by closing isolation valves on the liquid sodium lines to completely cut it out of operation. This enables each cycle to operate at the most efficient power level, full power, for 100, 75, 50, and 25% power.

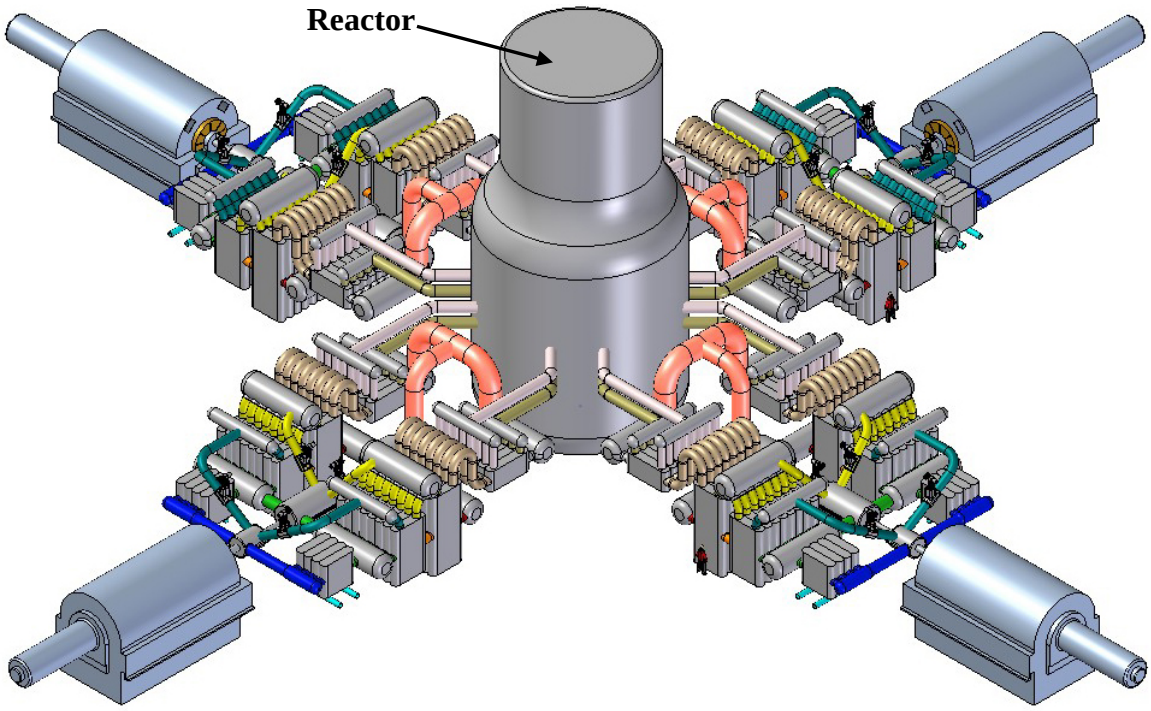

Fig. 3.30 Four 300MWe loops connected to one 1200MWe reactor
***Primary loop isolation vales not shown**

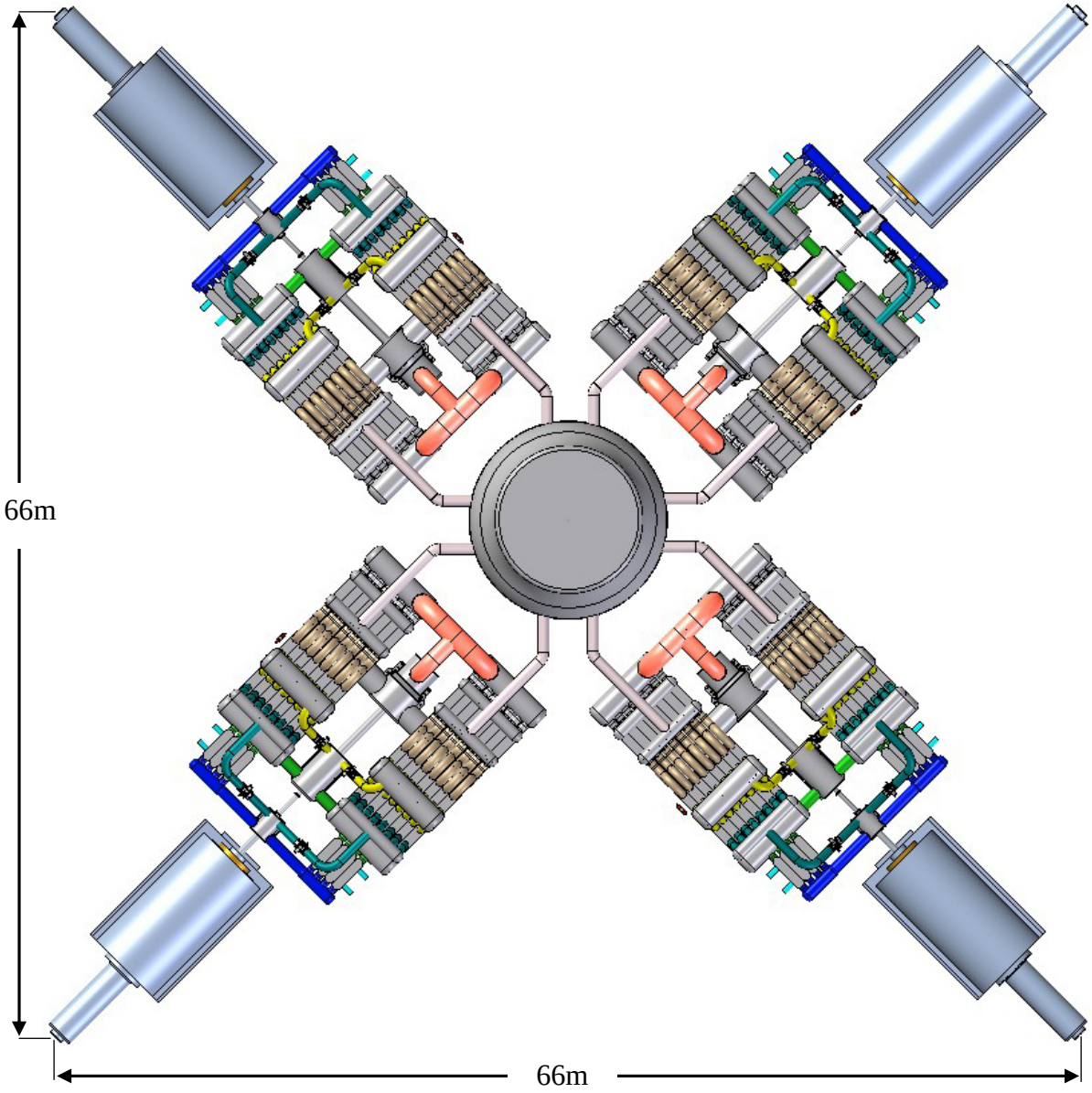

Fig. 3.31 Four 300MWe PCS loops connected to one 1200MWe reactor (top view)
***Primary loop isolation valves not shown**
***88m diagonal (tip to tip)**

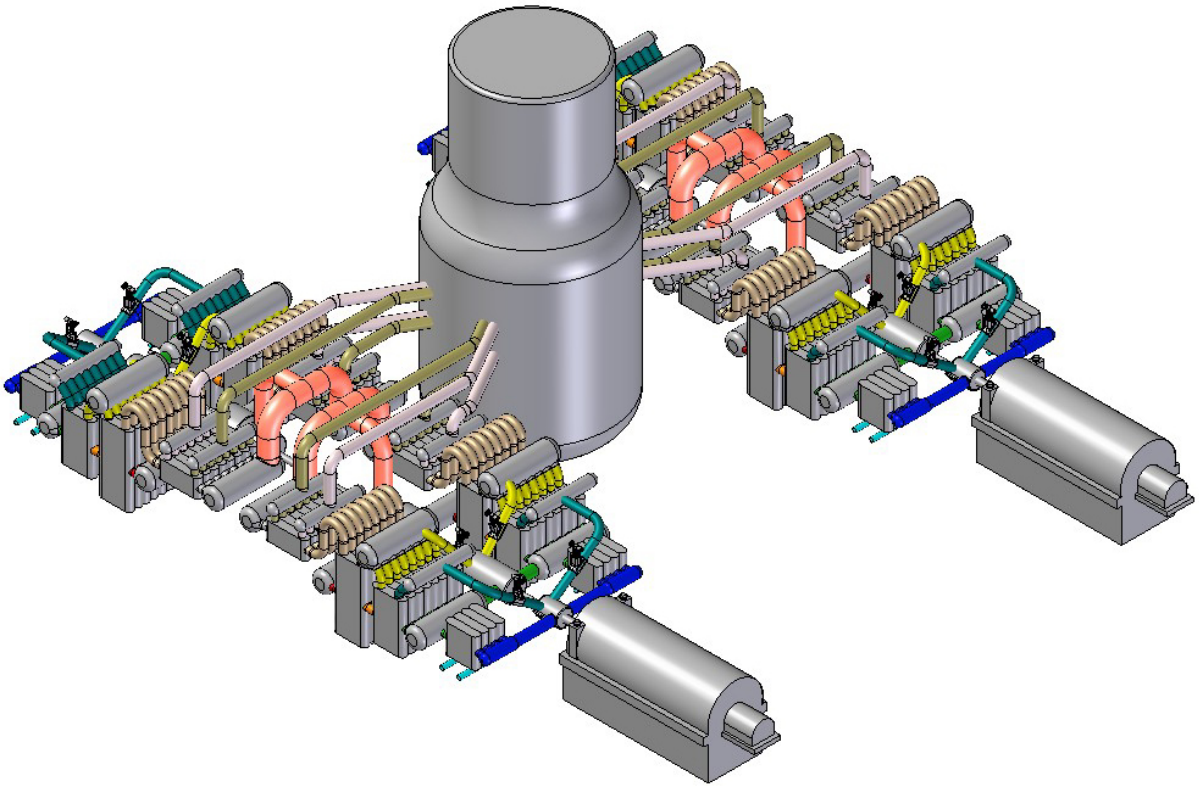

Fig. 3.32 2x600MWe PCS layout isometric view
***Primary loop isolation valves not shown**

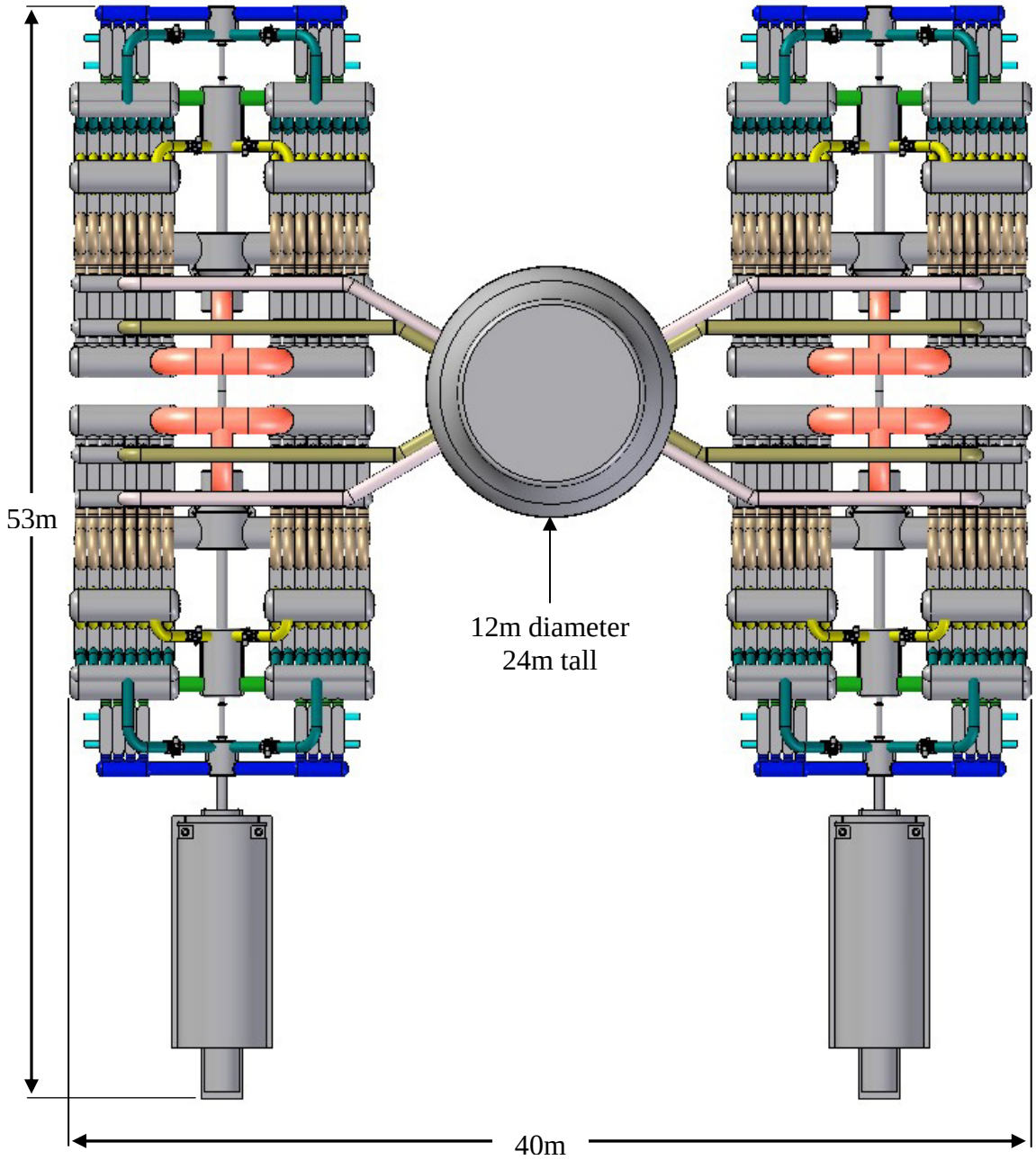

Fig. 3.33 2x600MWe PCS layout top view
***Primary loop isolation valves not shown**

The above depicted layout can further be compacted by combining the IHX into two units per 300MWe PCS loop (it is now shown as four units), thus enabling the use of only one large diameter pipe serving a centralized turbine. This will also require half as many pipes to/from the reactor and reduce the overall length approximately 8 meters. The advantage of this layout is the complete balance of axial thrust on the shaft by having equal and opposite facing turbomachinery, possibly only one main turbine, and only two generators, which will reduce the overall capital cost. At a later point when the IHX is

combined into two units per loop, the turbine possibly can be combined into one unit with a central inlet discharging in opposite directions with a diffuser for each loop (Figs. 3.34 and 3.35). One additional consideration that needs to be addressed in the future is to determine if it is realistic to attach a 600MWe generator to the compressor end of the shaft. If these issues are indeed resolved, the complete power cycle will be very compact.

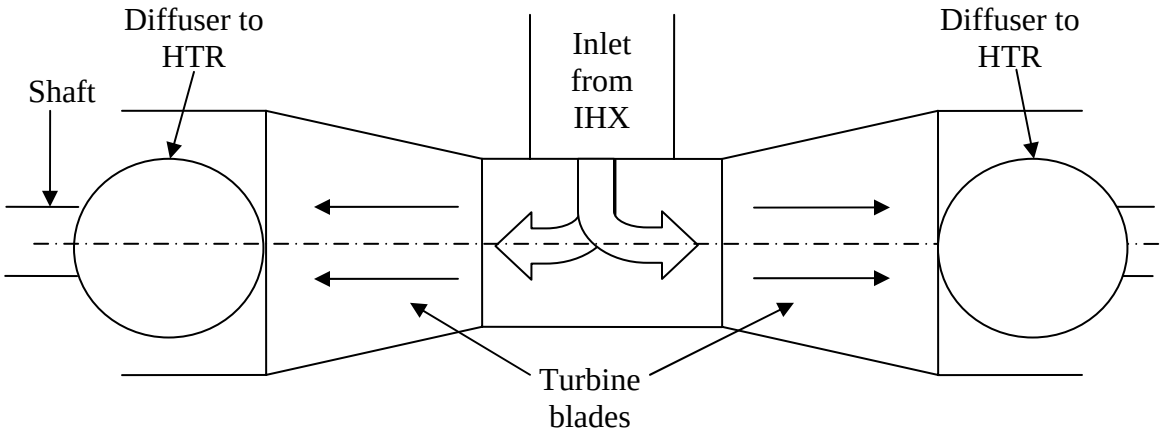

Fig. 3.34 600MWe (net) turbine for two 300MWe PCS loops on one shaft (side view)

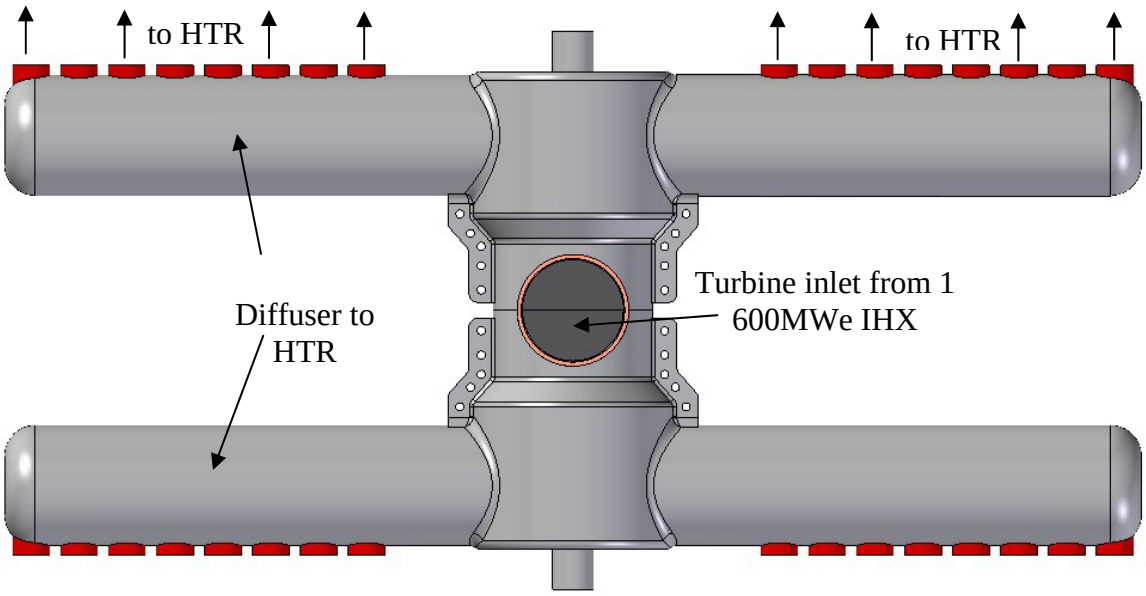

Fig. 3.35 600MWe (net) turbine for two 300MWe PCS loops on one shaft (top view)

Another option is to use one turbomachinery train for four 300MWe loops by stacking two 600MWe trains (i.e. essentially upstairs and downstairs). This will require slight piping rearrangements to the previous layout to allow for four connections to and from each compressor and two turbine inlets (one from the top and bottom) with four diffusers on each discharge side. Naturally, the feasibility of several connections to each

piece of turbomachinery needs to be explored. The economic tradeoff remains to be determined between two 600MWe turbomachinery trains or one 1200MWe train. A cartoon of a 1200MWe turbomachinery train is depicted in Fig. 3.36 in an end-on view looking down the turbomachinery shaft.

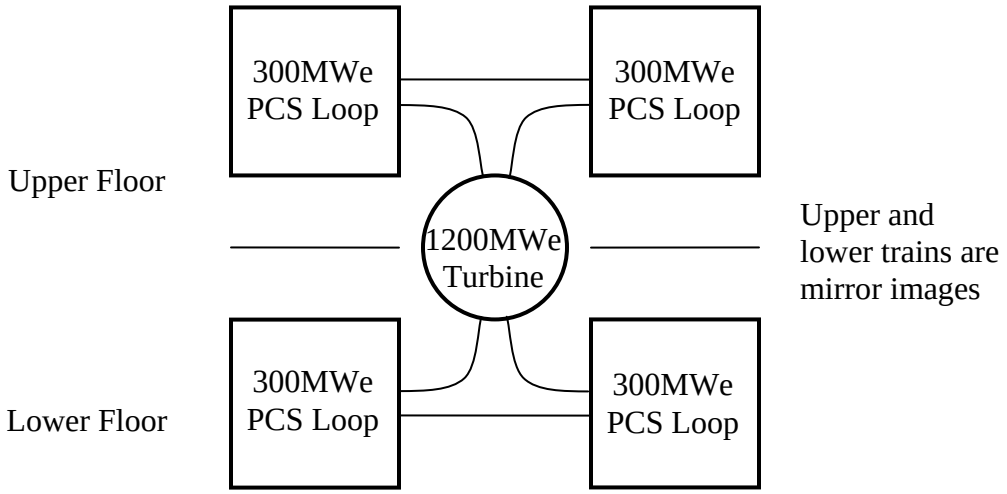

Fig. 3.36 Cartoon depiction of an over-under 1200MWe turbomachinery train layout for a horizontal arrangement (end-on view)

The last option is to use a vertical layout with four recuperation loops serving one turbomachinery train; essentially, this is the same as rotating the two-floor design 90˚. However, the applied forces on the bearings may be intolerable. The most realistic possibility for the vertical arrangement would be for the very small power ratings (≤30MWe) due to the considerably smaller support and counter thrust requirements. However, assuming successful development of vertical turbomachinery, this option would be one of the smallest footprint layouts for a distributed PCS. The cartoon layout for this option can be seen in Fig. 3.37.

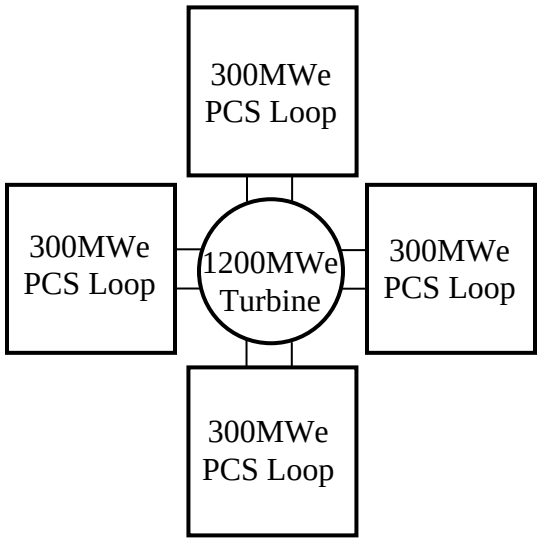

Fig. 3.37 Cartoon depiction of a 1200MWe turbomachinery train layout for a vertical arrangement (top view)

3.11 Summary and Conclusions

Several S-CO_2 PCS layouts were developed with power ratings ranging from 20-300MWe for a single unit and up to 1200MWe for several multi-loop arrangements. Minimizing the footprint and reducing the pressure losses were the main driving forces behind the design. The cycle currently exhibits less than a 1% efficiency reduction due to the pressure losses in the heat exchanger plena and pipes and is a considerable improvement over the previous generation layouts.

The smaller PCS layouts (≤50MWe) are designed to handle the partial loads with variable speed turbomachinery and the appropriate associated power electronics. Also, as the technology progresses the permanent magnet generator appears to be an ideal match for the PCS and is favorable to using a vertical turbomachinery layout. The larger layouts were designed primarily for multiple loop assemblies which enable individual loops to be cut in/out to efficiently accommodate the power demand.

To show the effect of pressure losses in various cycle passages on cycle efficiency, calculations were made for the following cases:

- Thermodynamic efficiency = 50.8%
- PCS with only heat exchanger active core pressure losses (ideal pipes and plena) – cycle net efficiency = 48.7%
- PCS with only heat exchanger pressure losses that include plena (ideal pipes) – cycle net efficiency = 48.4%
- PCS with all pressure losses accounted for - cycle net efficiency = 48.0%

Table 3.9 summarizes the PCS weight estimates. Since about 85% of system weight is PCHE, which are employed as replicated modules, the weight scales roughly linearly with rating.

Table 3.9 – Summary of layout weights

PCS Rating (MWe)	Approximate Weight (M.T.)	MT/MWe
300	1005	3.35
150	555	3.70
50	158	3.16
20	67	3.35

This work has identified several areas for future work that may impact the PCS layout and need to be addressed. These are listed in the future work recommendation section in chapter 5.

3.12 References for Chapter 3

(3-1) Atwood & Morrill Co., Inc., "Engineered Valve Products & Solutions", A&M 010304.

(3-2) Global Nuclear Energy Program (www.gnep.energy.gov)

(3-3) Gong Y., Carstens N.A., Driscoll M.J., Matthews I.A., "Analysis of Radial Compressor Options for Supercritical CO2 Power Conversion Cycles", MIT Report MIT-GFR-034, June 2006.

(3-4) Hejzlar P., Driscoll M.J., Gibbs J., Gong Y., Kao S., "Supercritical CO2 Brayton Cycle for Medium Power Applications", MIT Report CANES-ANP-PR-002, April 2006.

(3-5) Kuljian H., Nuclear Power Plant Design, A.S. Barnes and Co., Inc., Cranbury, 1968.

(3-6) Nuclear Power Plant Dukovney technical specifications (www.sujb.cz/docs/anex1.pdf)

(3-7) Shade, N., "Enormous Power In A Small Package", Compressor Tech, January-February 2006

(3-8) SOLID EDGE™ Version 17.00.02.04 © 2005 UGS

(3-9) Stahle P., Driscoll M.J., Hejzlar P., "Supercritical CO2 Power Conversion System and Layout for 300MWe Plant", MIT Report MIT-GFR-025R, September 2005.

Chapter 4 Beyond GEN-IV: Fusion Power Applications

4.1 Introduction

Advantage was taken of the participation of a summer intern to assess the suitability of the supercritical CO_2 power conversion system for fusion power reactors (4-1). His findings are summarized in this chapter. In what follows, an elementary understanding of fusion reactor physics and features is presumed, such as can be found in Ref (4-2) and 4-3).

4.2 Background

Fusion reactors require surrounding the plasma chamber with a blanket to breed tritium. The blanket also serves to create (collect) extract thermal energy for transport to a power conversion system. The essential ingredient in all blankets is lithium, which produces tritium by capturing the neutron released in the D,T fusion reaction. Neutron multipliers such as Be and Pb are also commonly included to assure adequate tritium replenishment. This leads to two basic types of blanket configurations: solid with separate coolant; and self-cooled. Table 4.1 summarizes typical conceptual compositions.

Table 4.1 Survey of Representative Blanket Concepts

T Breeding Materials	Coolants	Temperature Limit, °C	
SOLIDS			
Li_2O Li_2SiO_3 Li_2TiO_3	Na Pb (H_2O) (He)	≤ 600°C	To avoid: T release, loss of structural alloy strength, corrosion
LIQUIDS			
Li	Self-Cooled	> 180; ≤ 600	To avoid: freezing, loss of structural alloy strength, and corrosion
FLiBe		> 458; ≤ 600	
$Li_{17}Pb_{83}$		> 235; ≤ 600	

Notes:

(1) We favor liquid coolants at low pressure, hence rank He and H_2O as less favorable choices.
(2) Na, Pb, Li have MHD problems in magnetic fields, which increases pressure losses.
(3) Information abstracted from Refs (4-2), (4-3), (4-4), (4-5).

Also shown in the table are several temperature-related constraints, which typically reflect:

(1) maintaining long-term high temperature strength of structural materials
(2) preventing excessive tritium escape
(3) avoiding freezing of coolants such as lead or the liquid salt FLiBe.

4.3 Coupling to Power Conversion System

Figure 4.2 shows, in generic fashion, coupling of the blanket cooling loop to a power conversion system via an intermediate heat exchanger (which could also be the steam generator in a Rankine cycle). Any of the blanket coolants listed in Table 4.1 could be employed; however, in Ref (1) He and H_2O were excluded because of the preference for a low pressure blanket design. Gas phase coolants would, in general, also require a larger temperature difference across the IHX.

The most striking aspects of the arrangement in Fig. 4.1 are the modest upper temperature available to the PCS, and the relatively small difference between coolant entering and leaving the IHX. Both of their features fit in well with the inherent characteristics of the supercritical CO_2 recompression-type Brayton cycle.

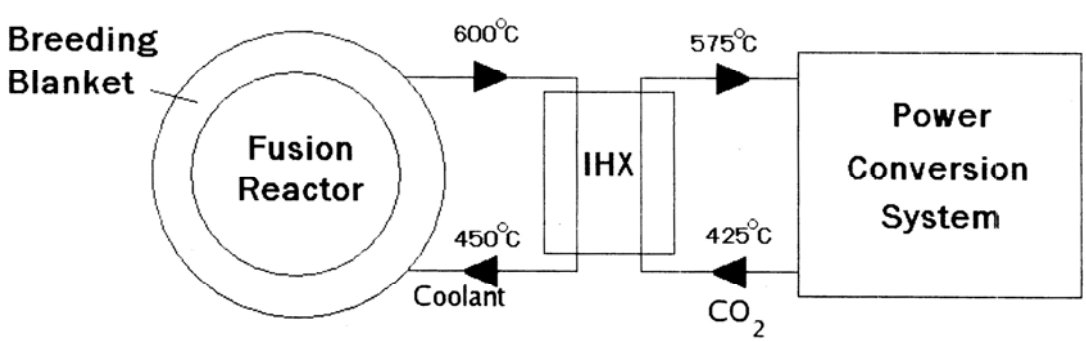

Fig. 4.1 Schematic Showing Coupling of Fusion Reactor to Power Conversion System

As part of this evaluation, simple correlations were fit to Brayton cycle efficiency computations made using the CYCLES II code (6) for the S-CO_2 cycle, to obtain a simple linear fit in terms of Carnot cycle efficiency:

$$\eta = 1.118\,\eta_c - 0.274 \qquad (4\text{-}1)$$

for turbine inlet temperatures in the range $400 < T_{IN} < 800°C$ and where the Carnot cycle efficiency is given by (for a 300°K ambient heat sink):

$$\eta_c = 1 - 300/T_{IN} \qquad (4\text{-}2)$$

For the nominal 575°C (848°K) turbine inlet temperature of Fig. 4.1, Eq (4-1) predicts a S-CO_2 PCS efficiency of 44.8%. This is significantly higher than the 36% Dostal estimates for a comparably modeled He Brayton PC (8), and much larger than the PBMR estimate of only 23% were it operated at the same lower turbine inlet temperature (7). Thus the helium PCS is not competitive under current, conservatively projected, temperature constraints.

Thus a Rankine cycle PCS may be the more relevant competition. Dostal predicts an efficiency of 43%, and the AGRs in the UK have an efficiency of 42.6% (at a turbine steam inlet temperature of 540°C). Nevertheless S-CO_2 is preferable on at least two counts:

(1) The PCS itself (S-CO_2 vs Rankine) is on the order of 40% less expensive, which translates into about 10% lower total plant capital cost.
(2) Steam Rankine feedwater in the British AGR, for example, enters the boiler at about 157°C, which would cause freeze-up problems in most of the proposed fusion blanket coolants. Use of boilers with a high recirculation rate, instead of once-through designs, could help avoid this problem.

4.4 Summary and Conclusions

The supercritical CO_2 power conversion system is a leading candidate for use with fusion power reactors because of a good match with temperature constraints on blanket design and characteristic temperature state points of the S-CO_2 PCS.

Further design refinement is on order. In particular, the feasibility of raising all temperatures in Fig. 4.1 by about 50°C to accommodate the use of a FLiBe self-cooled blanket should be evaluated.

4.5 References for Chapter 4

(4-1) Adi Al Hajj-Ahmad, "Use of the Supercritical CO_2 Power Conversion System with Fusion Reactors," Research Science Institute (RSI), Summer Program at MIT, Aug. 1, 2006.

(4-2) M.W. Stacey Jr., "Fusion, and Introduction to the Physics and Technology of Magnetic Confinement Fusion," John Wiley and Sons Inc. (1984)

(4-3) G.H. Miley, "Fusion Energy Conversion," ANS (1976)

(4-4) Proceedings of the Seventh International Symposium on Fusion Nuclear Technology, Tokyo, May 2005, M.A. Abdou, ed. Fusion Engineering and Design, Vol. 81, Feb. 2006

(4-5) S. Malang et al, FZKA 5581, "Development of Self-Cooled Liquid Metal Breeder Blanket," Forschungszentrum Karlsruhe (1995)

(4-6) D.M. Legault and P. Hejzlar, "CYCLES II: A Steady State Code for Supercritical CO_2 Power Conversion System Calculations," MIT-GFR-036, June 2006

(4-7) L. Paoletti et al, "Interfacing the Pebble Bed Modular Reactor and the Westinghouse Sulfur Process," Trans. Am. Nucl. Soc., Vol. 92, June 2005

(4-8) V. Dostal, P. Hejzlar and M.J. Driscoll, "The Supercritical Carbon Dioxide Power Cycle: Comparison to Other Advanced Power Cycles," Nuclear Technology, Vol. 154, June 2006

Chapter 5 Summary, Conclusions and Recommendations

5.1 Summary and Conclusions

Third generation versions of the recompression-type supercritical CO_2 Brayton power conversion system (PCS) have been developed for use with GEN IV reactor systems. The prior work at MIT, which was focused on a PCS rated at 300 MWe, was extended to cover the range between 20 and 1200 MWe, to demonstrate applicability to the small, medium and large reactor designs under consideration. All versions are for indirect cycles in which the PCS is coupled to the reactor primary coolant loop via an intermediate heat exchanger (IHX). In the interests of specificity, the reference primary coolant is postulated to be sodium, in view of the recent designation of the sodium cooled fast reactor as the system of choice for the GNEP program. However, no significant differences would be encountered if lead or liquid salt coolants are substituted. Gas phase coolants would require larger IHX surfaces and/or primary-to-CO_2 temperature differences, as well as a significantly higher primary coolant pumping power, with an attendant loss in overall plant thermal efficiency.

5.2 Recommendations for Future Work

In terms of activities which could significantly affect the results summarized in this report, the following are worth attention:

<u>Further Configuration Studies</u>

- Although a fairly radical proposition, one could devise a more integral PCS component arrangement by employing a prestressed cast iron vessel (PCIV), hitherto considered mainly for housing the reactor itself (5-1)
- The Japanese have recently published data on an improved PCHE (5-2), which could further shrink PCS heat exchanger size
- Downselecting to fewer reference plant ratings would sharpen the focus on future design efforts
- Foundations and supports should be designed to identify any potential problems
- Development of more detailed designs and PCS layouts for 600 and 1200 MWe turbomachinery trains to further evaluate the clustered PCS concepts sketched in chapter 3
- Re-assessment of vertical turbomachinery and bearings as a function of rating

Clarification of Temperature and Stress Constraints

- Carry out further corrosion tests in hot, high pressure CO_2 to set an upper limit on tolerable PCS temperature (5-5)
- Detailed design of insulation, especially internal
- Support ASME code cases to qualify metals at higher operating temperatures
- Thermal stress analyses, both steady state and transient
- Shaft and pressure stress analyses, to clarify whether to place the turbine closest to the generator or whether compressors can be in between

Design Auxiliary Systems

- CO_2 coolant storage, charging, and purification
- Evaluate use of the PCS for shutdown heat removal
- Bearing and seal system design

Expand Control-Related Efforts

- Clarify hardware requirements – e.g. number, nature and location of valves
- Strive for complete automation, minimization of operator action
- Extend the capability for use of variable speed (e.g. permanent magnet) generators to higher plant ratings
- A modest effort on multiple shaft turbomachinery to have a viable fall-back position should intractable control problems arise for the one-shaft approach

In addition to the above PCS-specific aspects, in view of the recent GNEP initiative, which focuses on the sodium cooled fast reactor, a consensus needs to be reached on whether CO_2 is adequately compatible with sodium, to permit elimination of an intermediate primary-to-PCS loop. This would considerably strengthen the rationale for pursuing the S-CO_2 power cycle at higher priority. There is a growing amount of test data being reported on this issue (5-3) (5-4).

5.3 References for Chapter 5

(5-1) L.B. Fishkin, "Prestressed Cast Iron Vessel (PCIV) Use for GEN-IV GFR Applications," MIT-GFR-006, April 2004

(5-2) Ishizuka T., Y. Kato, Y. Muto, K. Nikitin, N.L. Tri, and H. Hashimoto, "Thermal Hydraulic Characteristics of Printed Circuit Heat Exchanger in a Supercritical CO_2 Loop," Proc. of NURETH 11, Avignon, France, Oct. 2-6, 2005

(5-3) J.H. Choi et al, "Capsule Test for Investigating the Sodium-Carbon Dioxide Interaction," Proc. of ICAPP '06, Reno, June 2006

(5-4) H. Ishikawa, S. Miyahara, Y. Yoshizawa, "Experimental Study of Sodium-Carbon Dioxide Reaction," Proc. of ICAPP '05, Seoul, May 2005

(5-5) J. Lim, N. Li, R. Ballinger, "Materials Testing in Supercritical CO_2," *Trans. Am. Nucl. Soc.*, Vol. 94, June 2006

Appendix A S-CO_2 PCS Comparison to Rankine Cycle Components

To provide an easily recognizable size comparison, several typical components of a Rankine cycle were produced in SOLID EDGE®. The horizontal steam generator was a unit taken from the Russian designed VVER 440/213 (specifications are in Table A.1) and the remaining Rankine Cycle components were sized from an early nuclear power plant design text for a 300MWe pressurized water reactor system (Ref A-1). The IHX is compared to the steam generators (Figs. A.1 and A.2); the entire turbomachinery train of the S-CO_2 PCS is compared to the steam chest and low pressure (only) steam turbine (Fig. A.3); the precooler is compared to the main condenser (Figs. A.4 and A.5); and the HTR and LTR are compared to the feedwater heaters (Figs. A.6 and A.7). The S-CO_2 turbomachinery is comparable in size with the low pressure steam turbine, but the remaining cycle components clearly illustrate the compactness of the S-CO_2 PCS both in volume and footprint. An actual 300MWe Rankine cycle layout constructed with all of the feed pumps, steam generators, air ejectors, turbine bleeds, feedwater heaters, etc., would clearly show that the S-CO_2 PCS footprint is considerably smaller.

Table A.1– Russian VVER 440/213 specifications (Ref A-2)

Reactor Type		Pressurized water reactor (VVER 440/213)
Nominal thermal output		1375MWth
Generator output		440MWe
Net electrical output		388MWe
Own consumption		52MWe
Number of steam generators		6 (230MWth each)
Steam generator weight		Approx. 165 M.T.
Steam Generator body diameter		3.21m
Steam generator body length		11.80m

A.1 Steam Generator vs. IHX

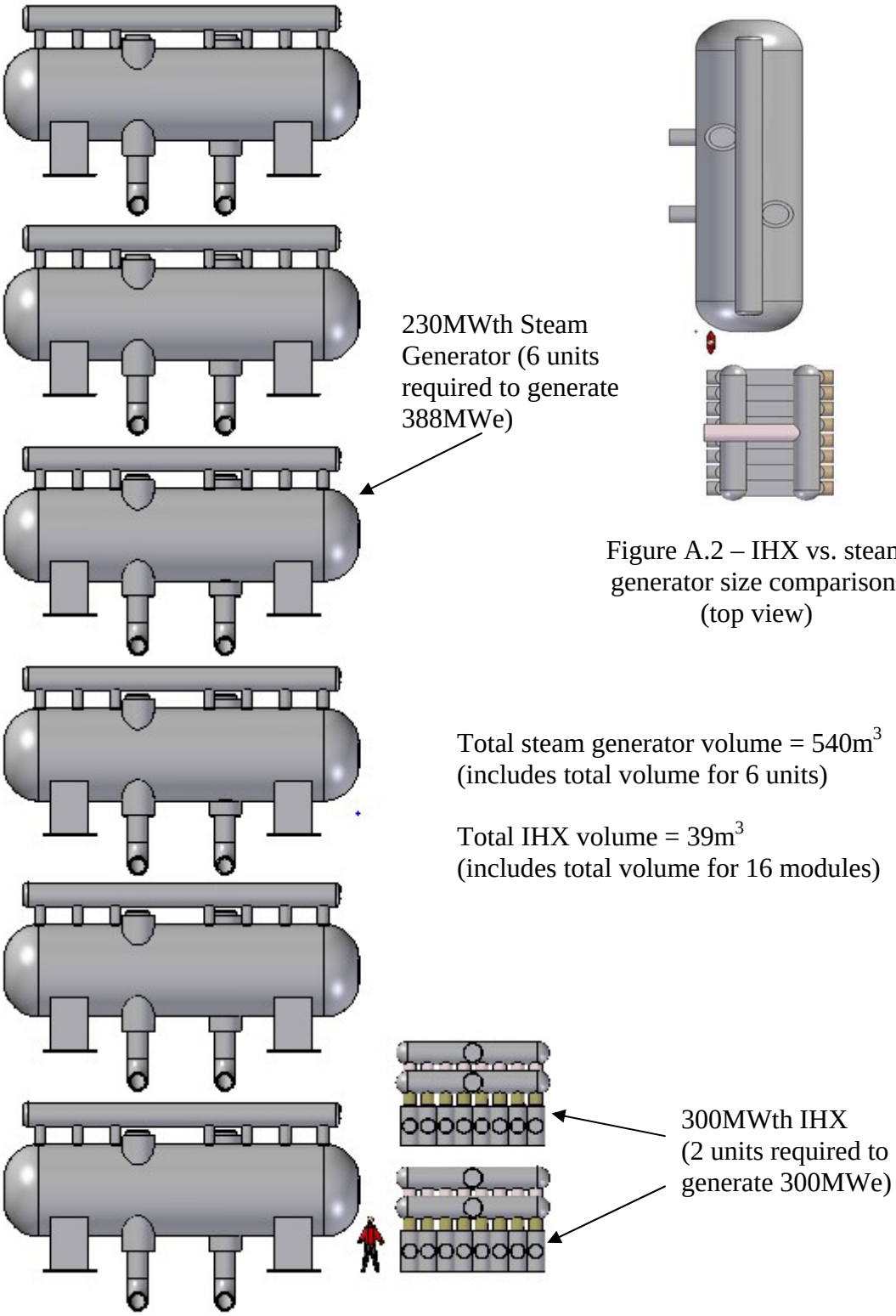

Figure A.1 – IHX vs. steam generator size comparison. (front view)

Figure A.2 – IHX vs. steam generator size comparison. (top view)

A.2 Gas Turbines vs. LP Steam Turbine with Steam Chest

The turbomachinery component spacing in Fig. A.3 is not to scale for the S-CO_2 layout (the turbomachines are shown much closer together than the actual spacing). However, the actual spacing is not important because the focus is on the size comparison between components and not the layout footprint.

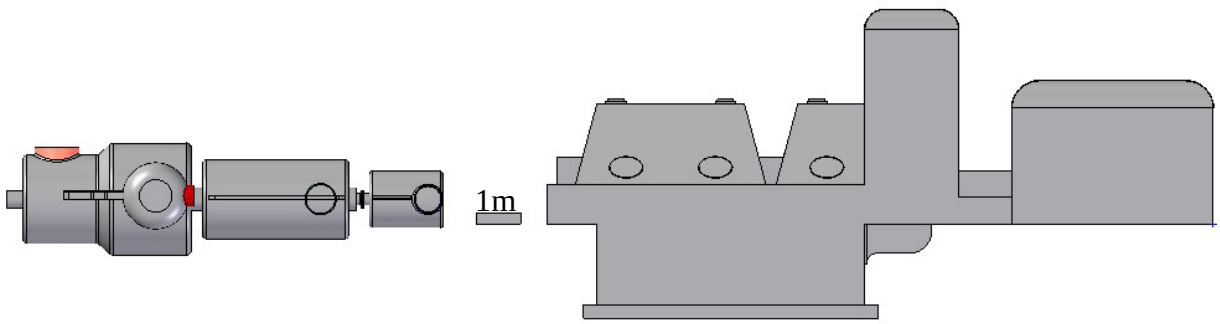

S-CO2 turbomachinery volume ≈ 48m^3
(includes diffusers)

LP turbine and steam chest volume ≈ 310m^3
(includes steam chest and half of the exhaust path to main condenser)

Figure A.3 – Turbomachinery volume comparison between S-CO_2 PCS turbomachines and the LP turbine plus steam chest from a Rankine cycle for a 300MWe rating

A.3 Main Condenser vs. Precooler

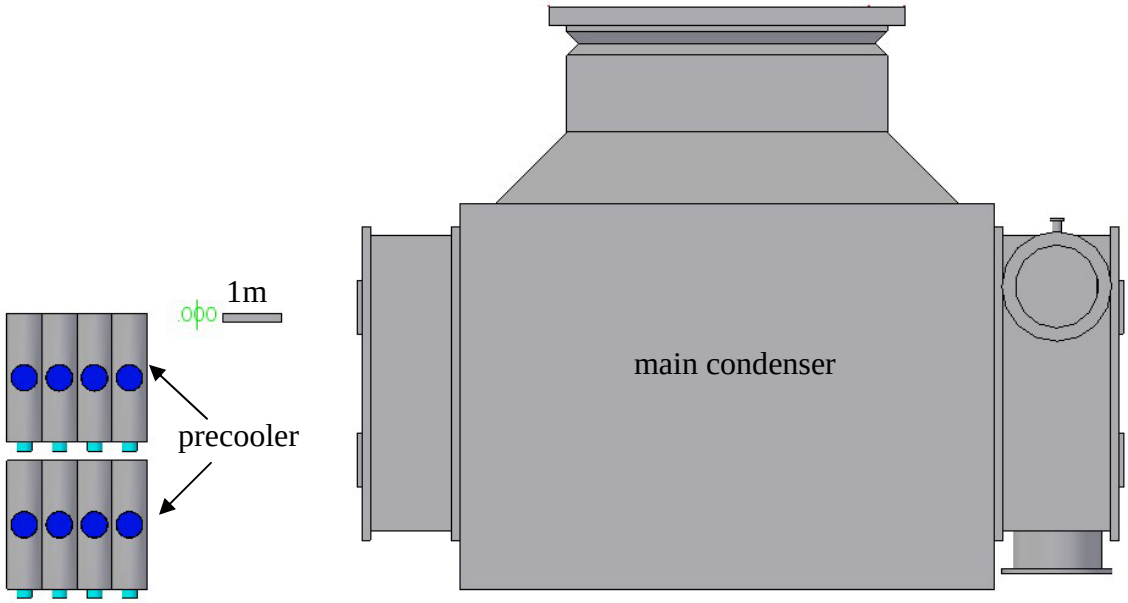

Figure A.4 – Volume comparison of the precooler units from the S-CO_2 PCS with the main condenser from a Rankine cycle for a 300MWe rating (side view)

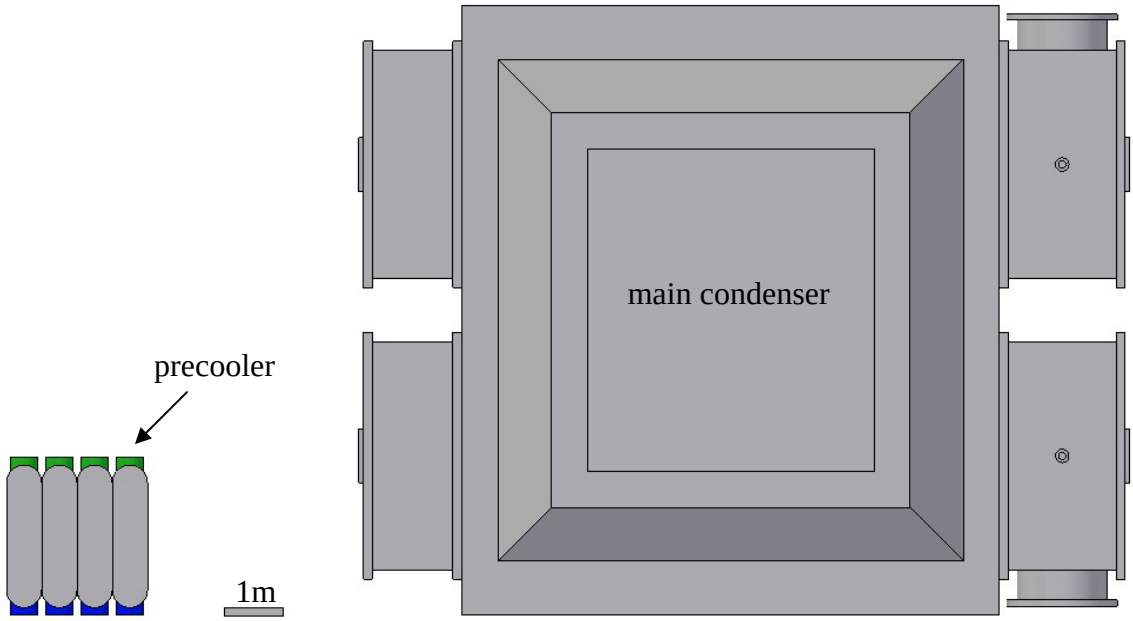

Precooler volume ≈ $24m^3$
(total volume for 8 precooler modules)

Main condenser volume ≈ $910m^3$
(includes half of turbine exhaust path)

Figure A.5 – Volume comparison of the precooler units from the S-CO_2 PCS with the main condenser from a Rankine cycle for a 300MWe rating (top view)

A.4 Feedwater Heaters vs. Recuperators

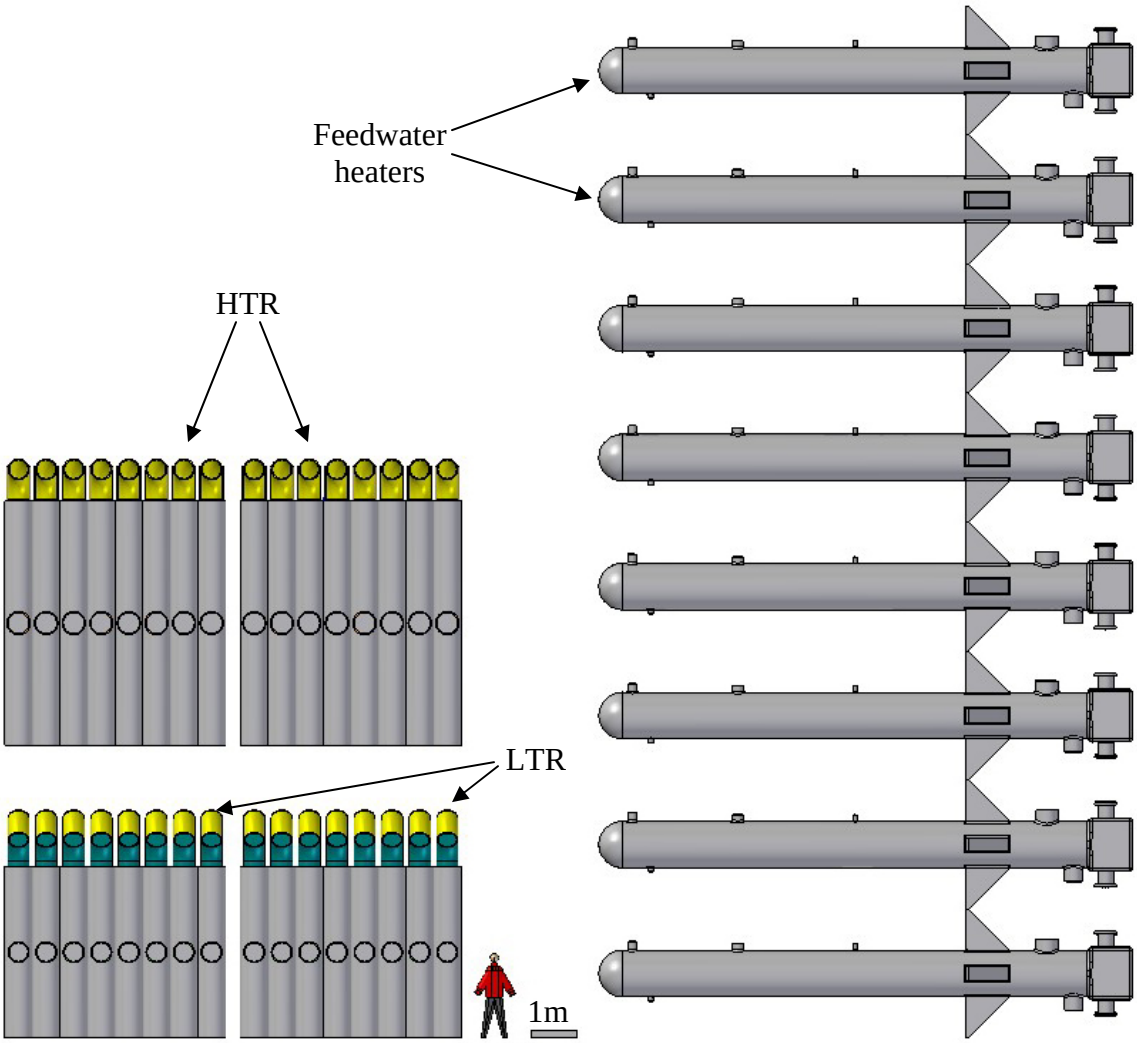

S-CO_2 recuperator volume ≈ 200m^3
(total volume with plena for 32 modules)

Feedwater heater volume ≈ 73m^3
(total volume for 8 heaters)

Figure A.6 – Volume comparison of the recuperators from the S-CO2 PCS with the feedwater heaters from a Rankine cycle for a 300MWe rating (front view)

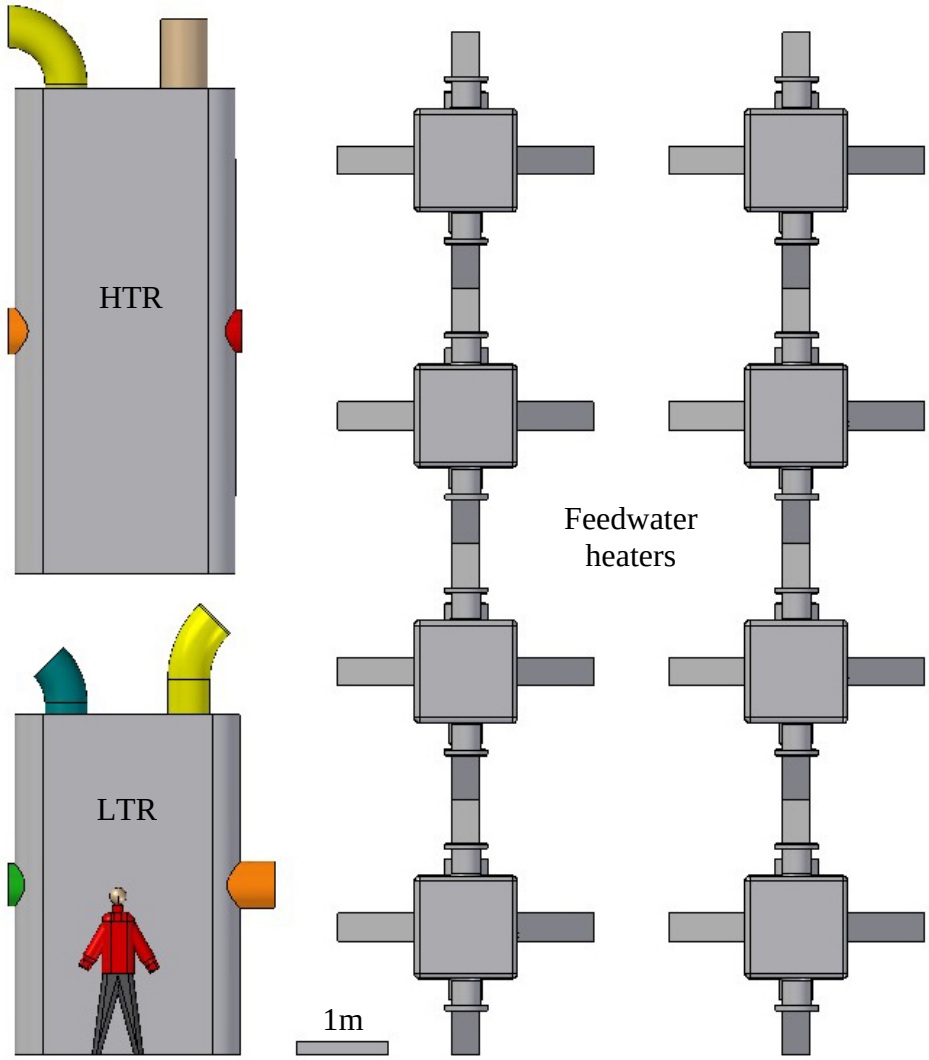

Figure A.7 – Volume comparison of the recuperators from the S-CO2 PCS with the feedwater heaters from a Rankine cycle for a 300MWe rating
(side view with components rearranged)

Figures A.6 and A.7 are provided simply to show that although the overall recuperator volume is nearly three times greater, it will require a smaller footprint when installed. Typically, the feedwater heaters will be vertical, with the spacing at least twice the distance as depicted here. The number of the required feedwater heaters will vary depending on the rating of the heater and the plant design, but a typical number for a 300MWe power rating is six or eight heaters.

References for Appendix A

(A-1) Kuljian H., Nuclear Power Plant Design, A.S. Barnes and Co., Inc., Cranbury, 1968.

(A-2) Nuclear Power Plant Dukovney technical specifications (www.sujb.cz/docs/anex1.pdf)

(A-3) SOLID EDGE™ Version 17.00.02.04 © 2005 UGS