U.S. DEPARTMENT OF ENERGY | Nuclear Energy

U.S. Fuel Cycle Research Program Development

Douglas Burns

Deputy Director, INL Fuel Cycle Science & and Technologies

July 12, 2011

Outline

- What is the nuclear fuel cycle and why is it worth studying?
- How is DOE managing fuel cycle R&D?
- What are the fuel cycle grand research challenges?

U.S. DEPARTMENT OF ENERGY
Nuclear Energy

Background: Advanced Fuel Cycles

- **Strong international R&D and demonstrations from the 1950's to the late 1980's**
  - The demonstrations proved the viability of key technologies, but with a focus on resource extension
  - Resource extension became less of a focus during the 1970's
- **Plutonium recycle capabilities were established starting in the 1980's, then a significant shift toward Plutonium destruction occurred in the 1990's**
- **Recent efforts have been devoted to establishing a long term approach for development of a sustainable nuclear enterprise**
  - Waste management
  - Resource utilization
  - Global proliferation control

United States Department of Energy Nuclear Energy Roadmap

- **Roadmap outlines how DOE's Office of Nuclear Energy (DOE-NE) will support national imperatives for clean energy, economic prosperity, and national security**
- **Roadmap outlines an integrated approach to meet these objectives**
- **Roadmap addresses transformation of programs to a more science-based approach**
- **Roadmap can be found at www.ne.doe.gov**

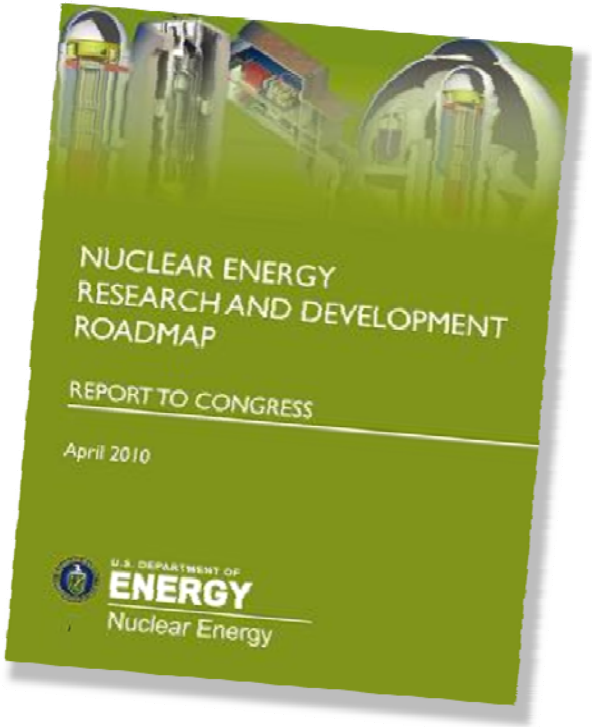

U.S. DEPARTMENT OF ENERGY

Nuclear Energy

U.S. Nuclear Energy Objectives

- **Develop technologies and other solutions that can improve the reliability, sustain the safety, and extend the life of current reactors**
- **Develop improvements in the affordability of new reactors to enable nuclear energy to help meet the Administration's energy security and climate change goals**
- **Develop sustainable nuclear fuel cycles**
- **Understand and minimize the risks of nuclear proliferation and terrorism**

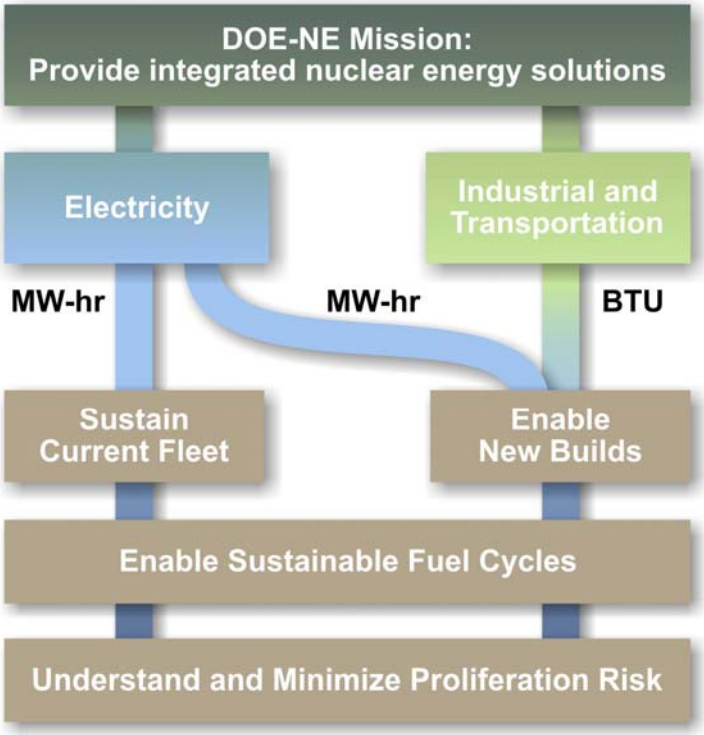

Basic Light Water Reactor Components

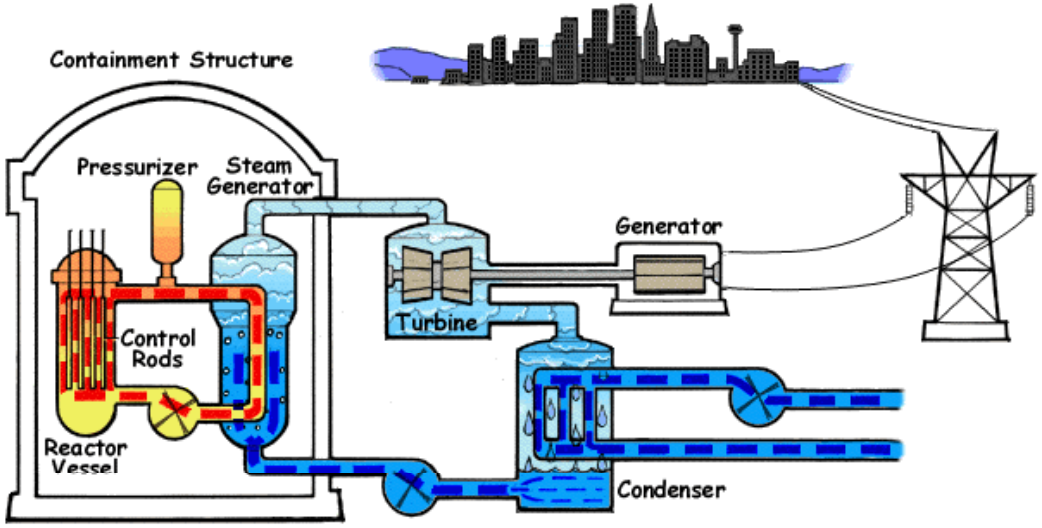

Pressurized Water Reactor

Boiling Water Reactor

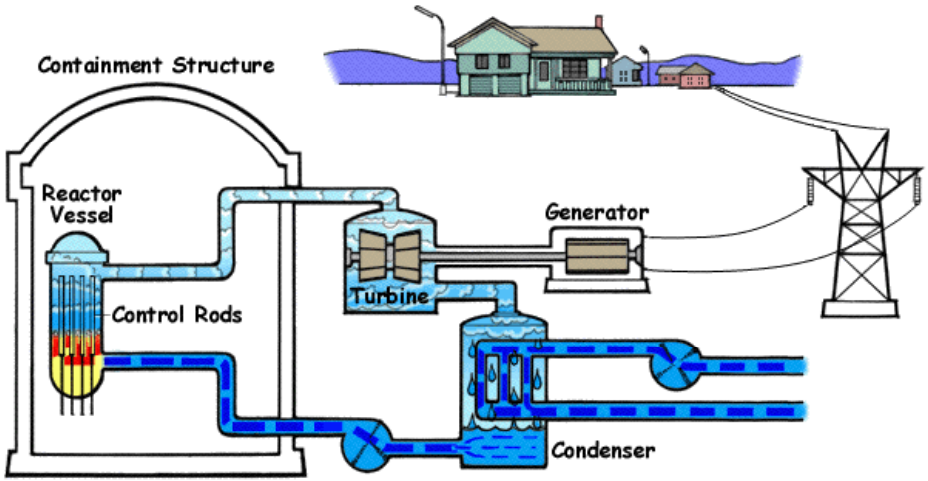

U.S. DEPARTMENT OF ENERGY

Nuclear Energy

Technical Challenges

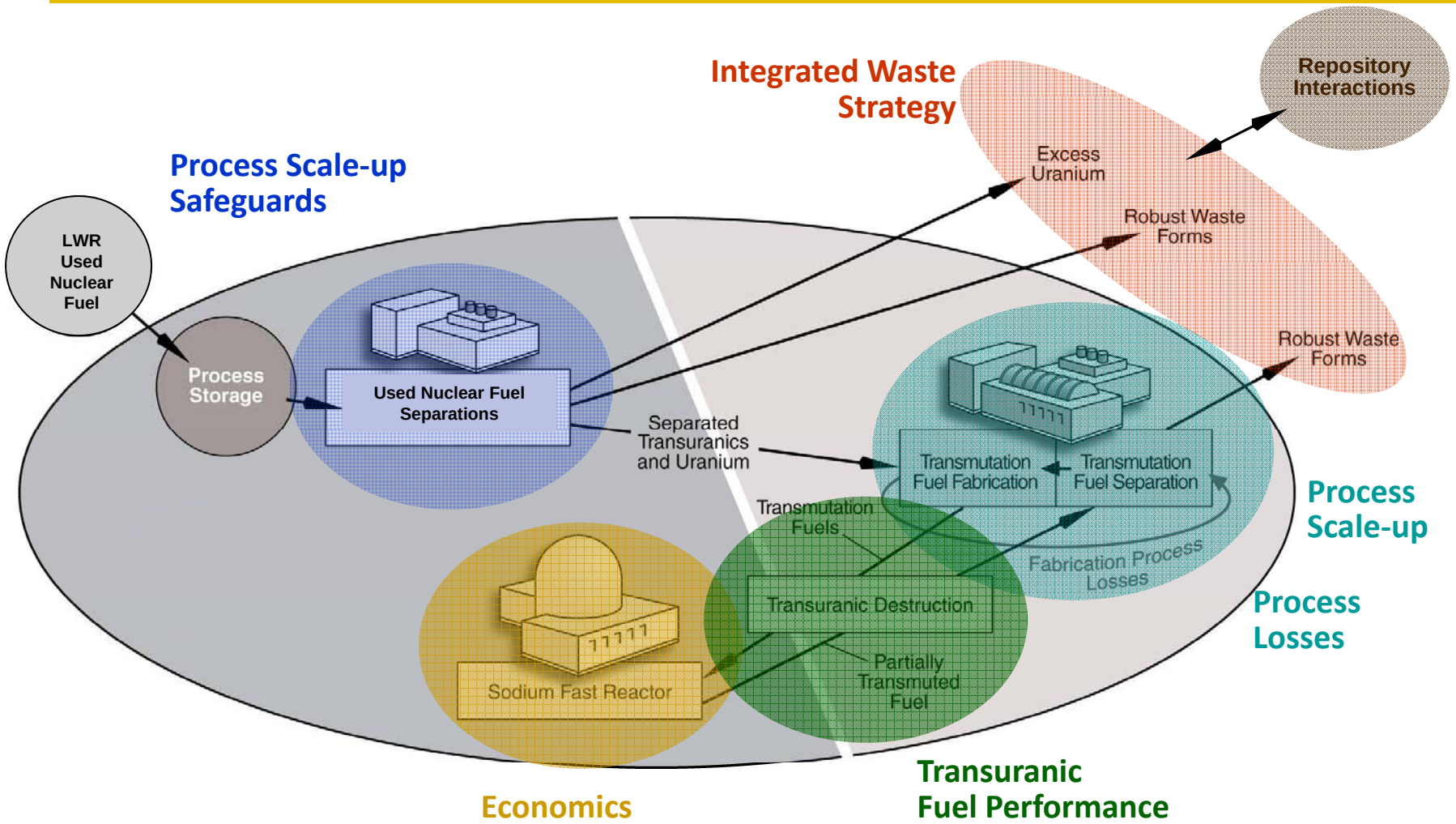

U.S. DEPARTMENT OF ENERGY

Nuclear Energy

Fuel Cycle Technology Development

- ***Goals***
  - In the near term, define and analyze fuel cycle technologies to develop options that increase the sustainability of nuclear energy
  - In the medium term, select the preferred fuel cycle option(s) for further development
  - By 2040, be prepared to demonstrate the selected fuel cycle options at engineering scale
- ***Challenges***
  - Develop high burnup fuel and structural materials that are able to withstand irradiation for longer periods of time
  - Develop simplified separations, waste management, and proliferation risk reduction methods
  - Develop optimized systems that maximize energy production while minimizing waste
- ***Needed R&D***
  - Implement science-based development program for fuel recycling
  - Obtain mechanistic understanding of waste form behavior
  - Perform fundamental analysis of fuel fabrication process, and fuel/clad performance
  - Evaluate very high burnup systems that require minimal or no chemical separations
  - Enable real time nuclear material accountancy and control

Technology Challenge: Transmutation Fuel Development

- **Multiple elements in the fuel**
  - U, Pu, Np, Am, Cm
- **Varying thermodynamic properties**
  - e.g. High vapor pressure of Am
- **Impurities from separation process**
  - e.g. High lanthanide carryover
- **High burnup requirements**
- **High helium production during irradiation**
- **Remote fabrication & quality control**
- **Fuel must be qualified for a variable range of composition**
  - Age and burnup of light water reactor used fuel
  - Changes through multiple passes in fast reactors
  - Variable conversion ratios for fast reactors

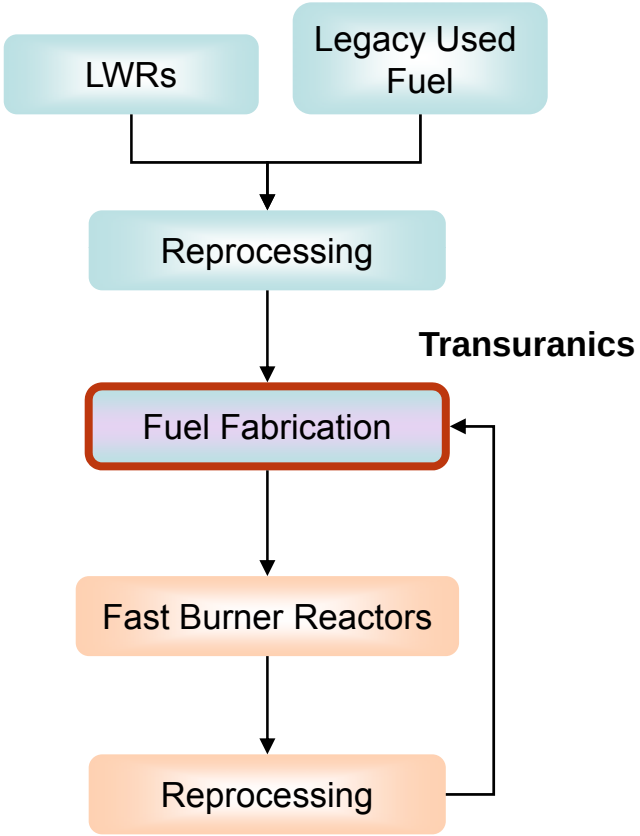

Technology Challenge: Predicting Fuel Behavior

- Microstructure
- Initial distribution of species
- Initial stoichiometry
- Thermal conductivity
- Thermal expansion
- Specific heat
- Phase diagrams
- Fission gas formation, behavior and release
- Materials dimensional stability
  - Restructuring, densification, growth, creep and swelling
- Defect formation & migrations
- Diffusion of species
- Radial power distribution
- Fuel-clad gap conductance
- Fuel-clad chemical interactions
- Mechanical properties

Dynamic properties:

Changes with irradiation, temperature, and time

Nonlinear effects:

Initial condition dependence (fabrication route)

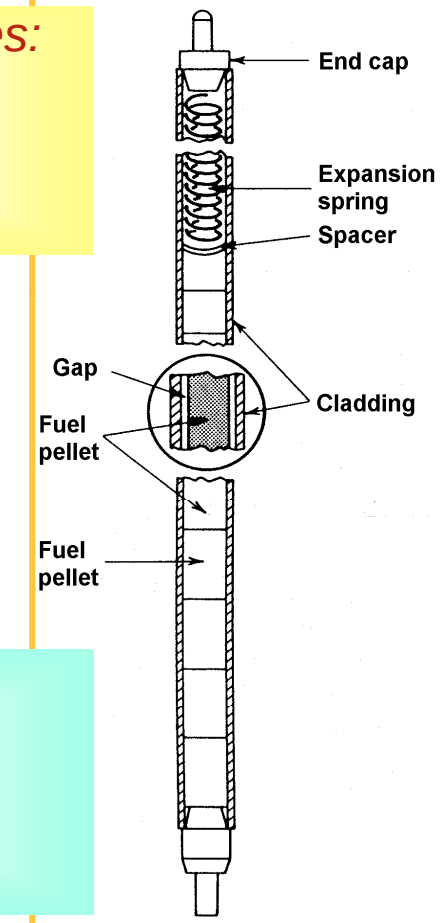

U.S. DEPARTMENT OF ENERGY

Nuclear Energy

Technology Challenge: Simplified Separations

- Address LWR and transmutation fuels
- Effective separation in small-scale flowsheet tests with actual LWR used fuel demonstrated
- Tools for design of chemical separation flowsheets to meet specific criteria
- Improved understanding of scaled equipment operational parameters and envelopes
- Recovery of uranium and transuranic elements at engineering scale using electrochemical methods
- Initial oxide reduction capability developed at kg scale
- Robust waste forms demonstrated

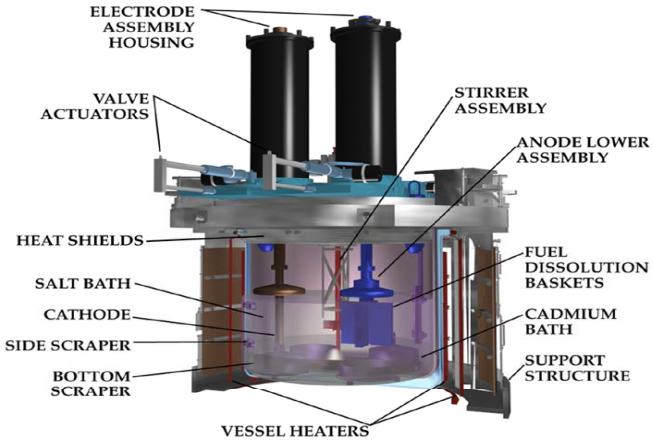

Technology Challenge: Repository Development

■ **There are many options for deep geologic disposal, but all options have technical and regulatory challenges**

Mined geologic repositories –

Saturated rock

Hard rock – granite, basalt, …

Soft rock – shale, sedimentary rocks, …

Unsaturated rock

Volcanic tuff

Clay (saturated)

Salt (dry)

Isolation is provided by engineered systems, chemical environment, geologic stability

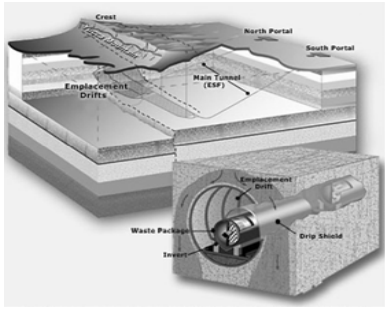

Yucca Mountain

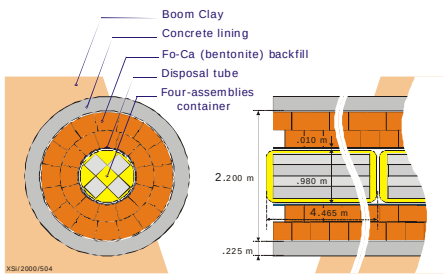

Saturated Clay Layer

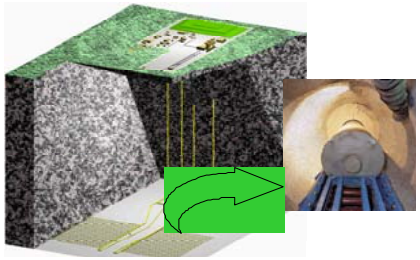

Granite

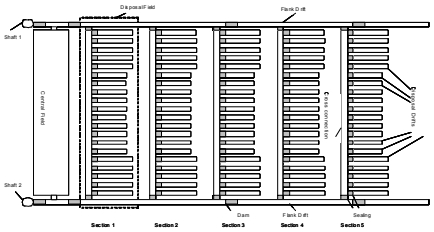

Salt

Deep boreholes

Isolation is provided by depth

Seabed/sub-seabed, subduction zone, rock melt, ice sheet, space, …

Many issues - isolation potential, international law, geology, …

Managing Fuel Cycle R&D

- **Appointment of Secretary Chu provided clear new direction**
  - Long-term, science-based, transformational, technical miracles
- **Initial emphasis was on limiting fuel cycle facility construction and refocusing on long-term, high-risk, high-reward R&D**
- **The program was soon modified to re-incorporate the requirement for demonstration (goal-oriented approach)**
  - Develop options for decision-makers to select fuel cycle technologies for commercial-scale demonstration in the 2040 time frame

U.S. DEPARTMENT OF ENERGY
Nuclear Energy

Current Research Approach

1. **Long term deployment of fuel cycle technologies**
2. **Based on an initial analysis of a broad set of options with modified boundary conditions**
3. **New objectives: beyond repository benefits**
4. **Based on the use of modern science tools and approaches designed to solve challenges and develop better performing technologies**

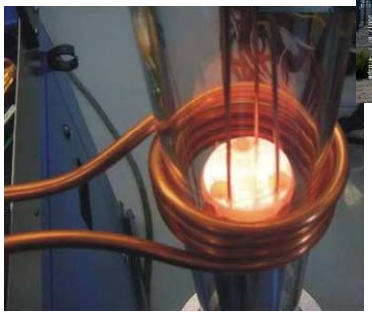

Program needs to foster creativity to discover new options and new technologies

U.S. DEPARTMENT OF ENERGY

Nuclear Energy

Need For Creativity

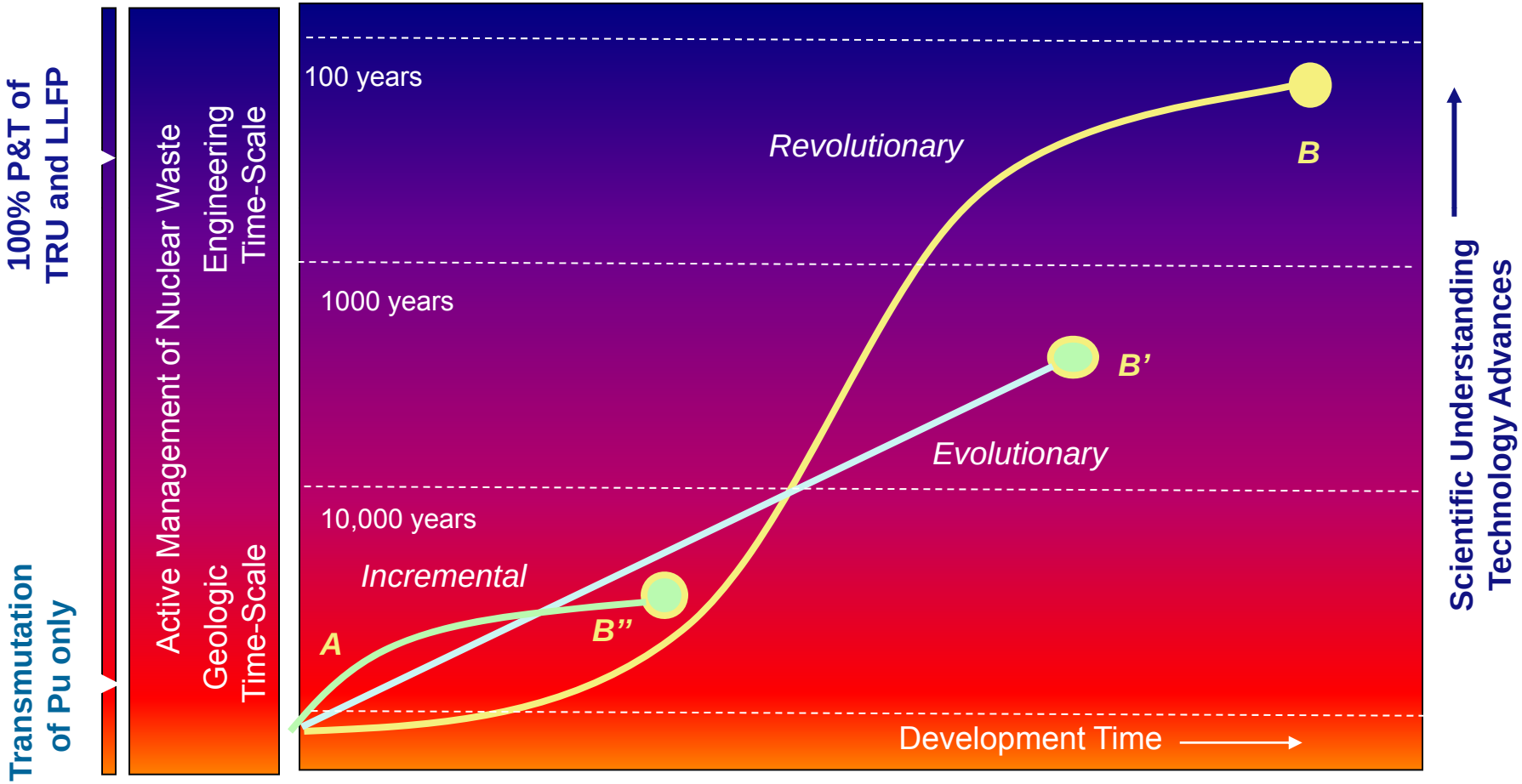

U.S. DEPARTMENT OF ENERGY
Nuclear Energy

Prototype-Based vs. Science-Based Approaches

Prototype Dominated Approach
Empirical - Observational

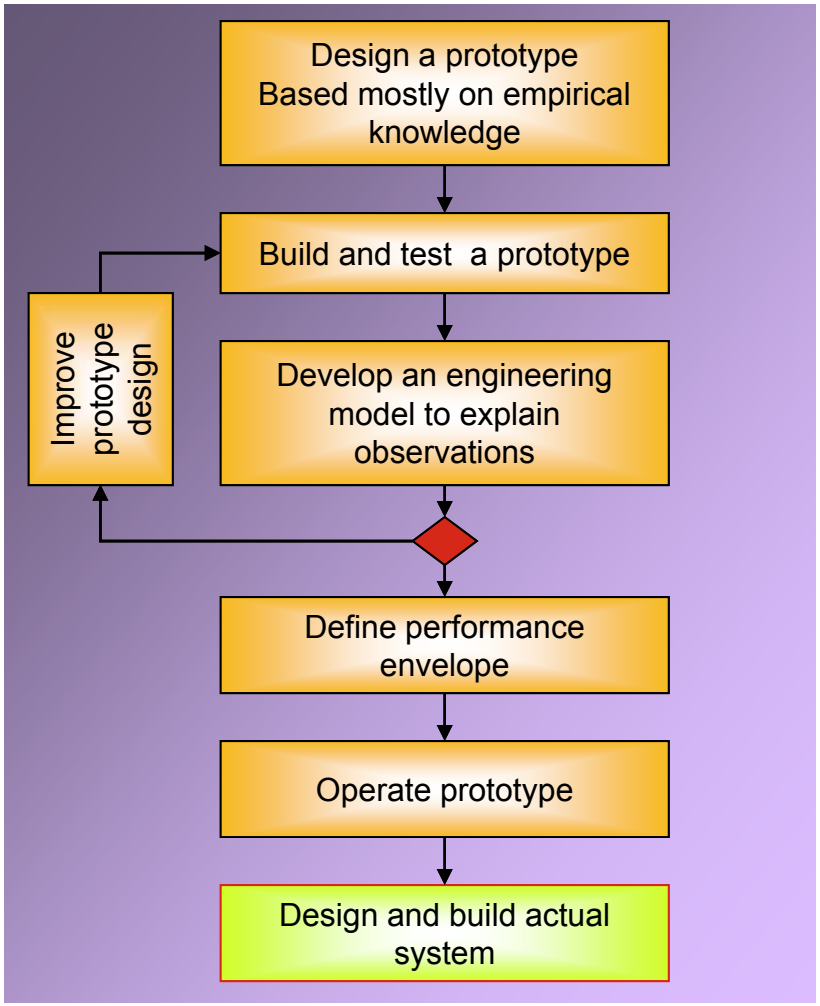

"Goal Oriented Science-Based"
Approach - Predictive

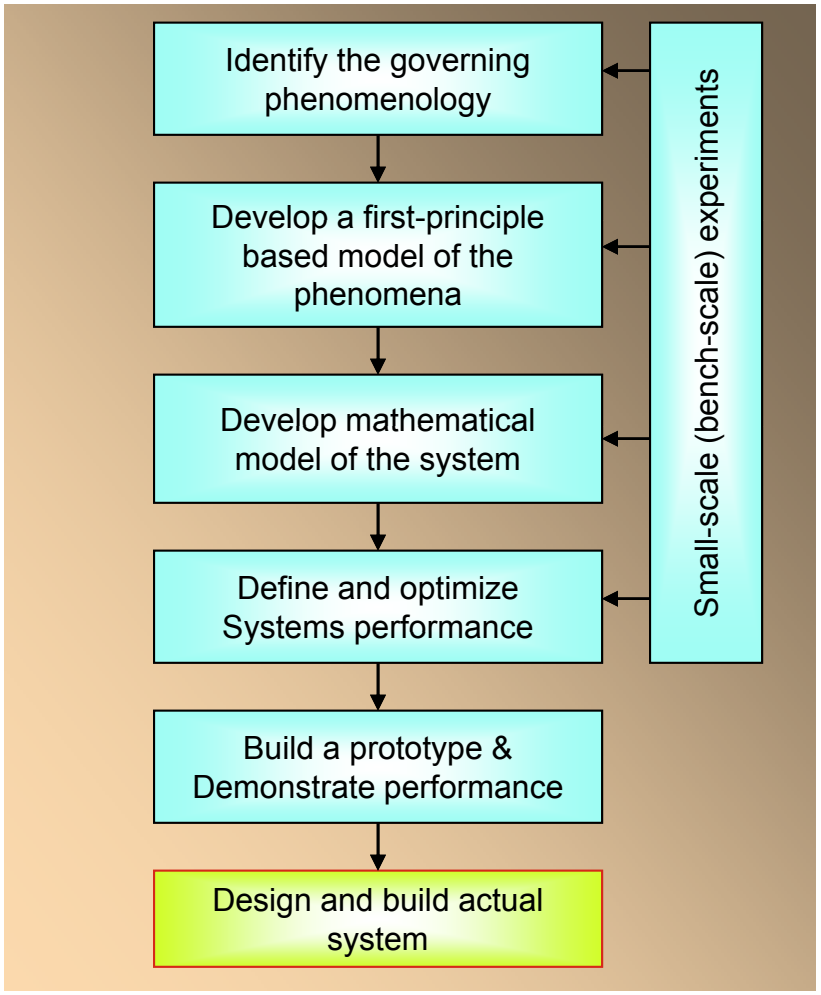

U.S. DEPARTMENT OF ENERGY

Nuclear Energy

Three Potential Fuel Cycle Options

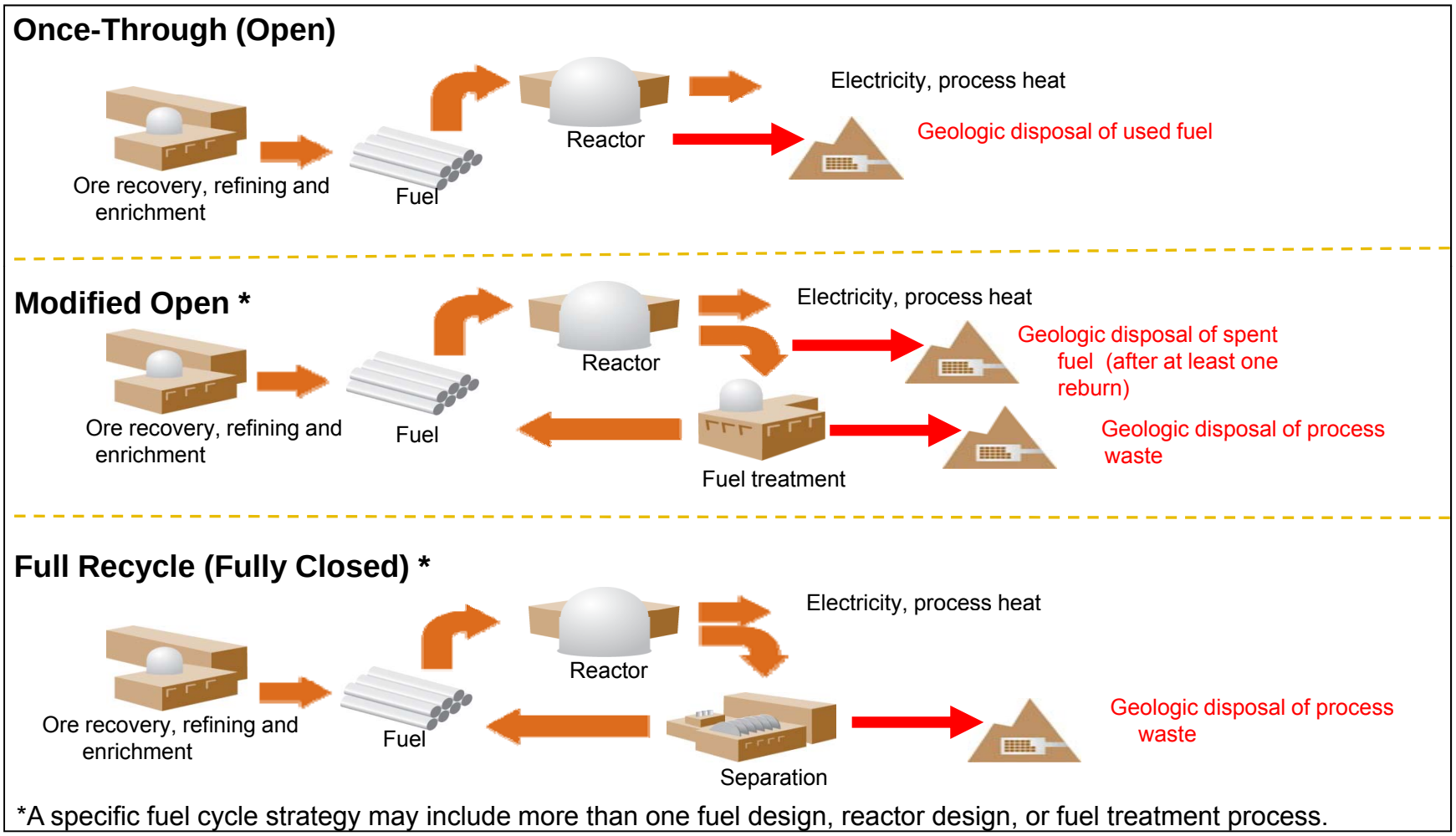

*A specific fuel cycle strategy may include more than one fuel design, reactor design, or fuel treatment process.

New fuel cycles will require technologies with significantly improved performance

U.S. DEPARTMENT OF ENERGY

Nuclear Energy

Transformational Nuclear Fuels Scientific Research and Development

Today's Technology Challenges

For fuels with variable compositions

- Understanding and predicting fuel behavior and performance
- Reliably fabricating fuel with zero defects and with zero losses

Grand Challenge

- Zero loss and zero defect fuel fabrication
- Ultra-high burnup fuel operation with zero clad-breach

Development Path

Develop a μ-structural understanding of fuels and materials

- Closure of combined transport and phase-field equations
- Separate effect testing and properties measurement at sub-grain scale
- Effect of nano-scale implantations
- Innovative clean and reliable fabrication techniques with tightly controlled microstructures tailored to desired performance

Transformational Result

- Predictive capability for fuel process and in-pile behavior for a variety of initial and boundary conditions
- Novel fuel forms

U.S. DEPARTMENT OF ENERGY

Nuclear Energy

Waste Storage and Disposal Scientific Research and Development

Today's Technology Challenges

Storing and disposing used fuel, HLW, GTCC, and LLW from a range of fuel cycles

- Understanding and predicting geologic repository performance
- Safe, secure, and cost effective storage and disposal

Grand Challenge

Integrated waste management with near zero radionuclide release from storage and disposal system

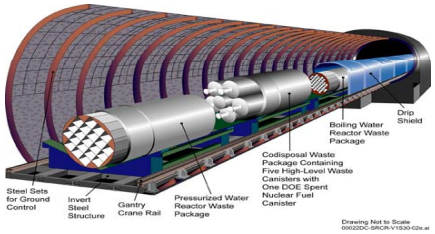

Development Path

Develop an understanding of geologic repository performance

- Review extensive technical basis developed in the U.S. and internationally over the past several decades
- Explore range of geologic settings, including granite, salt, clay, and tuff, and range of disposal concepts, including shaft-room, ramp-drift, borehole, and shallow land burial
- Investigate storage concepts for a range of waste streams
- Develop an integrated waste management strategy applicable to a range of fuel cycle options

Transformational Result

Predictive capability for performance of storage and disposal options for a range of fuel cycles

U.S. DEPARTMENT OF ENERGY

Nuclear Energy

Transmutation Systems Scientific Research and Development

Today's Technology Challenges

- Fast reactors have not been commercially deployed – perception of higher system cost of electricity
- Licensing regime is based on light water reactor technology
- Ability to design and assess other systems

Grand Challenge

- Risk to public health and safety prohibited by inherent safety
- Cost of fast spectrum systems less than current ALWR
- Ability to model new systems

Development Path

Develop key cost reduction features

- Modeling and simulation for optimized design and performance, and safety assurance
- Advanced materials for performance, reliability, longevity, and safety
- Energy conversion innovations for improved efficiency and component cost
- R&D facilities for validation of innovative features and exploration of options

Transformational Result

- Revolutionary improvements in fast spectrum system performance (and cost) to enable transmutation and economic fuel cycle closure
- Novel transmutation systems

U.S. DEPARTMENT OF ENERGY
Nuclear Energy

Separations and Waste Form Scientific Research and Development

Today's Technology Challenges

Recycling used nuclear fuel:

- Meeting current air emission requirements
- Economical recovery of transuranic elements for recycle/transmutation
- Minimal waste generation

Grand Challenge

- Near-zero radioactive off-gas emissions
- Simplified, single-step recovery of transuranic elements
- Significantly less waste produced

Development Path

Develop fundamental understanding of separation process and waste form thermodynamics

- Understand underlying separation driving forces
- Exploit thermodynamic properties to effect separations
- Elucidate microstructural waste form corrosion mechanisms

Transformational Result

- Predictive capability for separation and waste form performance over a broad range of operational conditions
- Novel separations technologies

Materials Protection, Accounting, and Control for Transmutation Scientific Research and Development

Today's Technology Challenges

- Large throughput facilities require shutdown for periodic inventory
- New reactor designs require new nuclear material management approach
- Move from reactive to preventive systems approach

Grand Challenge

Develop online, real-time, continuous, accountability instruments and techniques that permit an order of magnitude improvement in the ability to inventory fissile materials in domestic fuel cycle systems, in order to detect diversion and prevent misuse

Development Path

- **Next generation instrumentation**
  - High sensitivity and specificity
  - Enabled by new physics data
  - New sensor materials
- **Integration of disparate data in quantitative manner**
  - Real time assessments
  - Probability basis with uncertainties
- **Predictive modeling and simulation at atomistic and plant level**

Transformational Result

Real time nuclear materials management with continuous inventory

U.S. DEPARTMENT OF ENERGY
Nuclear Energy

Modeling and Simulation Scientific Research and Development

Today's Technology Challenges

- Theory drives experiment design
- Experiments provide discoveries to drive theory
- Empirically based modeling and simulation heavily dependent on staying close to experimental basis

Grand Challenge

Develop process/methodologies to enable the use of computer simulation in a fundamentally new way for operation, design, and licensing of nuclear systems

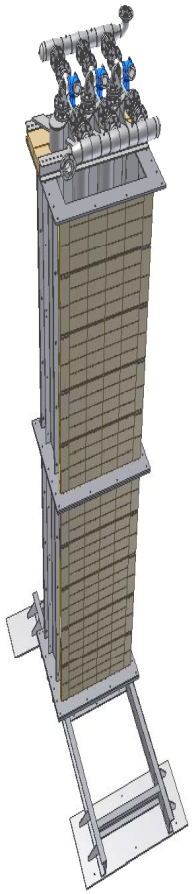

Development Path

- Treat simulations as numeric experiments
- Focus on simulating physics vs characterizing specific devices
- Numerically solve governing equations of motion in detailed 3-D grids
- Carry out simulations prior to experiments
- Leverage massive computing power (petascale) + HPC expertise
- Combine single-effects validation to infer behavior of integrated systems

Transformational Result

Modeling and simulation tools that are based on fundamental understanding of physical processes and capable of predicting performance of fuel cycle technologies

Conclusions

- **A systematic look at the full range of fuel cycle options is being implemented**
  - No down selection decisions will be made until appropriate metrics have been identified and necessary analyses have been completed
  - New boundary conditions, objectives, and constraints are fundamentally changing our approach
  - Development of science based tools and methods supporting innovation will continue in the near to medium term
  - We are using an evaluation process adapted to the discovery phase