HTGR Technology Course for the Nuclear Regulatory Commission

May 24 – 27, 2010

Module 6c

Pebble Bed HTGR Thermal-fluid Behavior

Outline

- Key T/F parameters
- Key T/F characteristics
- Heat transfer modeling
- T/F modeling challenges
- Testing and test facilities

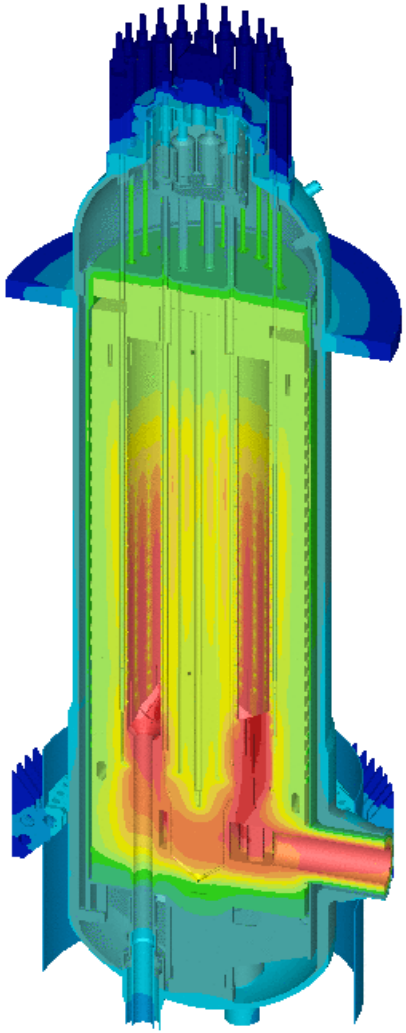

Typical Thermodynamic Cycles

Direct Brayton Cycle

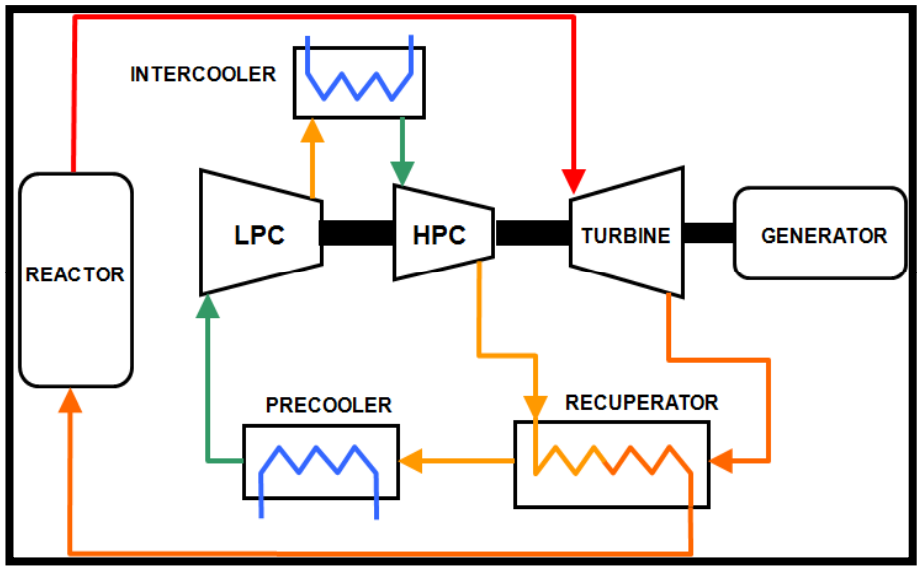

Indirect Rankine Cycle

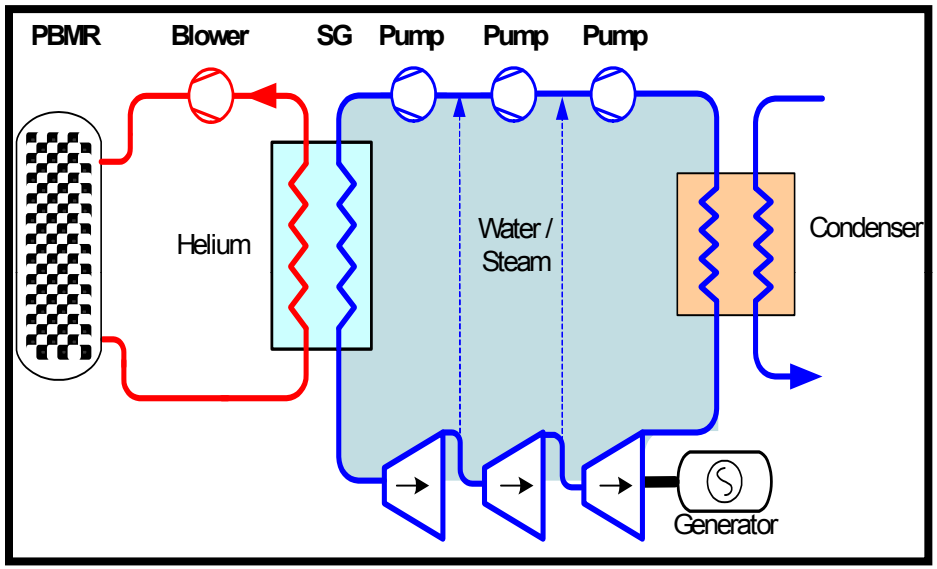

- **The T/F conditions of the reactor are determined from the type of thermodynamic cycle used**

Typical Reactor T/F Parameters

Parameter	Direct Brayton	Indirect Rankine
Reactor outlet temperature	~900 °C	~700-750 °C
Reactor inlet temperature	~500 °C	~250 °C
Reactor coolant	Helium	
Reactor massflow	Depend on reactor power	
Reactor pressure	Typically 6-9 MPa, but designer's choice	
Reactor pressure drop	~300 kPa (annular core)	~100 kPa (cylindrical core)

Outline

- Key T/F parameters
- Key T/F characteristics
- Heat transfer modeling
- T/F modeling challenges
- Testing and test facilities

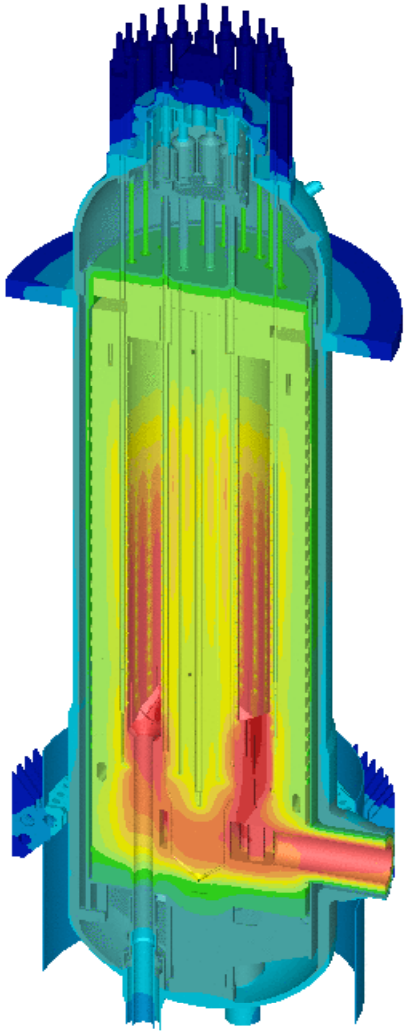

Key Thermal Fluid Characteristics

- **Helium is a single phase coolant**
  - No phase change in the cycle to deal with
  - Helium has excellent heat transfer properties
  - Compressible gas
- **Large ΔT across reactor inlet to outlet**
  - Requires a smaller coolant mass flow rate resulting in lower pumping requirements
- **High coolant outlet temperatures**
  - Allows for higher thermal efficiency in power conversion cycles and process heat applications
- **Small ΔT between fuel and coolant (~70 °C)**
- **Large temperature margins in the fuel (~600-1000 °C)**
- **Slow thermal transients**
  - Large thermal capacitance in the fuel and graphite combined with a low power density results in slow transients
- **Pebble bed is one flow channel**
  - Strong coupling in the pebble bed does not require throttling of flow channels or adjusting for flow distribution through the core

Thermal-Fluid Considerations

- **In the Thermal-Fluid design of a pebble bed core, the following aspects need to be considered:**
  - Positions of heat generated
  - Flow path design to keep the metallic components cool
  - Identification of all intentional and unintentional flow paths
  - Pressure zoning to prevent hot gas impingement
  - Temperature stratification in the outlet flow
  - Component Temperatures
  - Needs to design both an active (forced flow) and passive (natural) heat transfer paths

Heat Generation Input

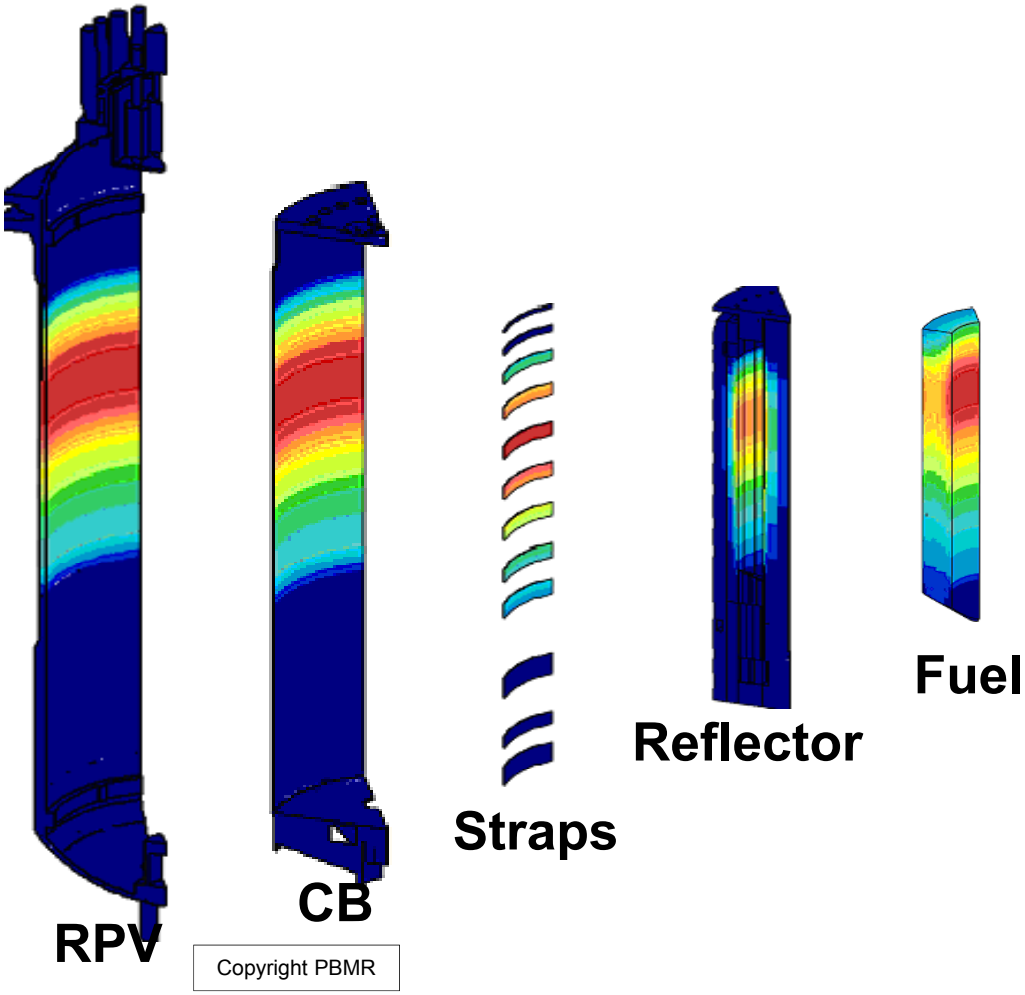

- **Heat is generated in both local (in the fuel) and non-local sources**

- **Heat sources:**
  - Fuel
  - Reflectors
  - Control rods
  - Lateral restraints
  - Core barrel
  - Reactor vessel

Coolant Flow Design

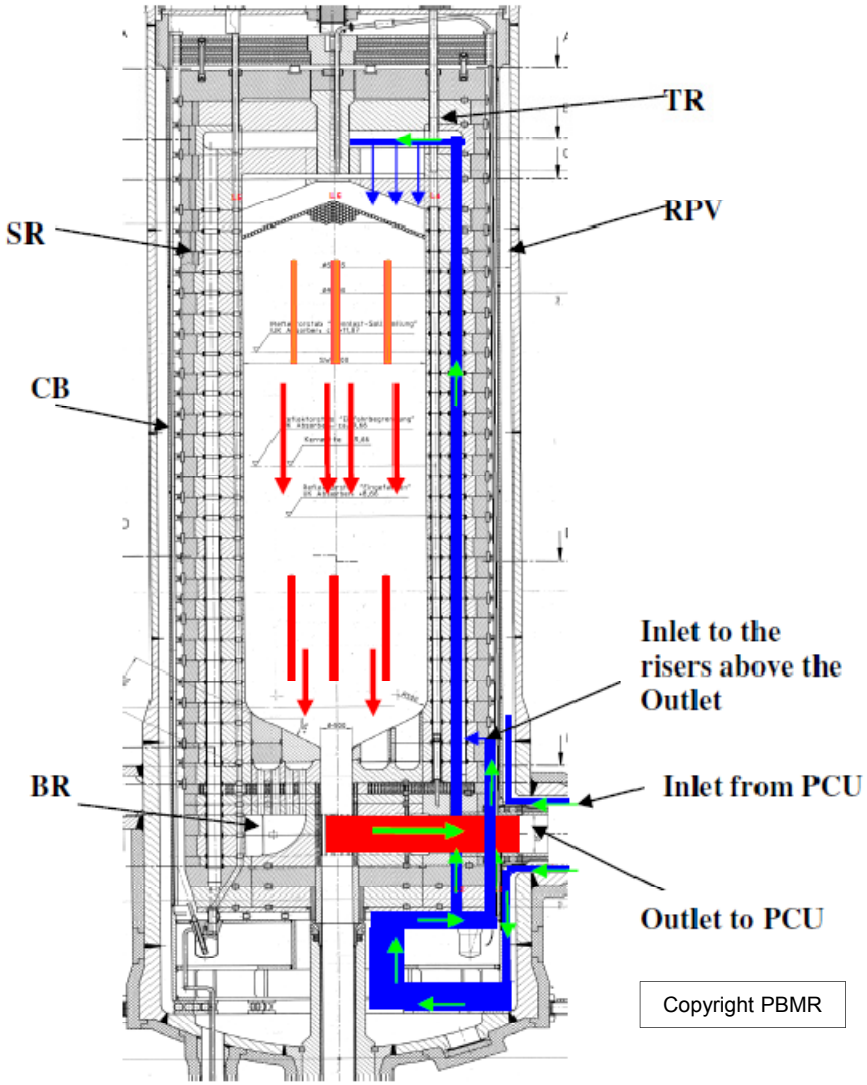

- **The coolant flow path design needs to consider the following aspects:**
  - cool the metallic structures where necessary
  - reduce bypass flows
  - provide a uniform temperature distribution
  - mix the bypass flows to lower the thermal stratification in the outlet gas

Secondary Flow Paths

Key	Description
j	Control rod cooling flow – This is to provide cooling to the control rod.
k	Centre Reflector Cooling Flow – This is to remove heat from the centre reflector.
l	Annulus pressurisation flow – Pressurises the annulus between the core barrel and the side reflector.

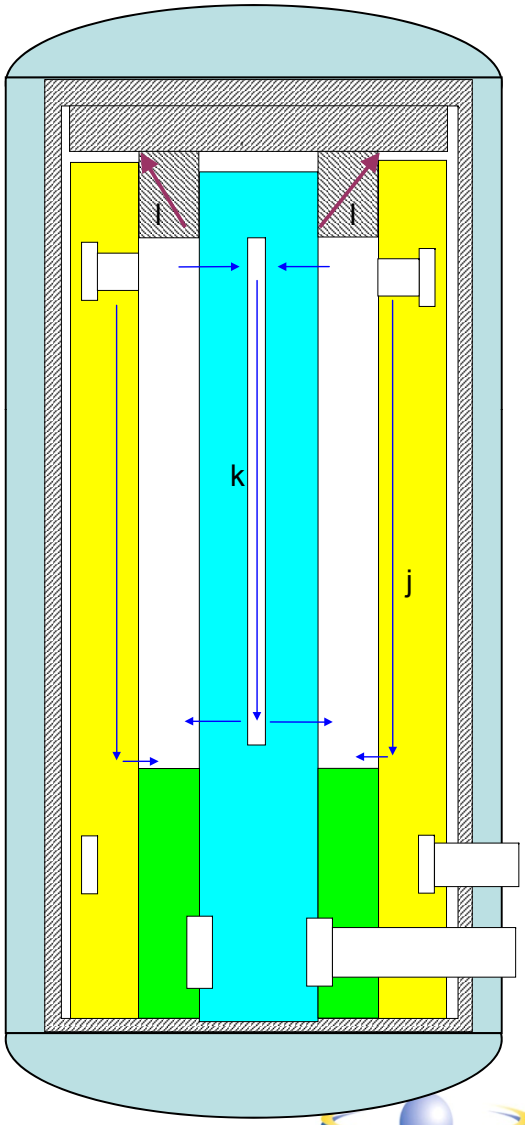

These are engineered flows

Leakage Paths

Key	Description
L1	Across Side Reflector Leakage
L2	Inlet to Outlet Leakage
L3	Along Side Reflector Leakage

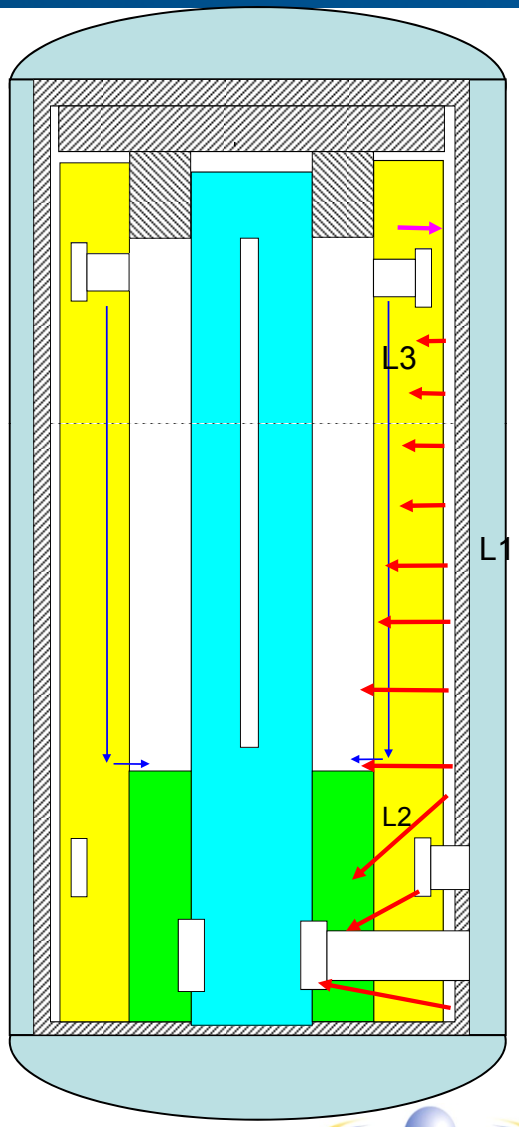

These are unintentional flows

Pressure Zoning

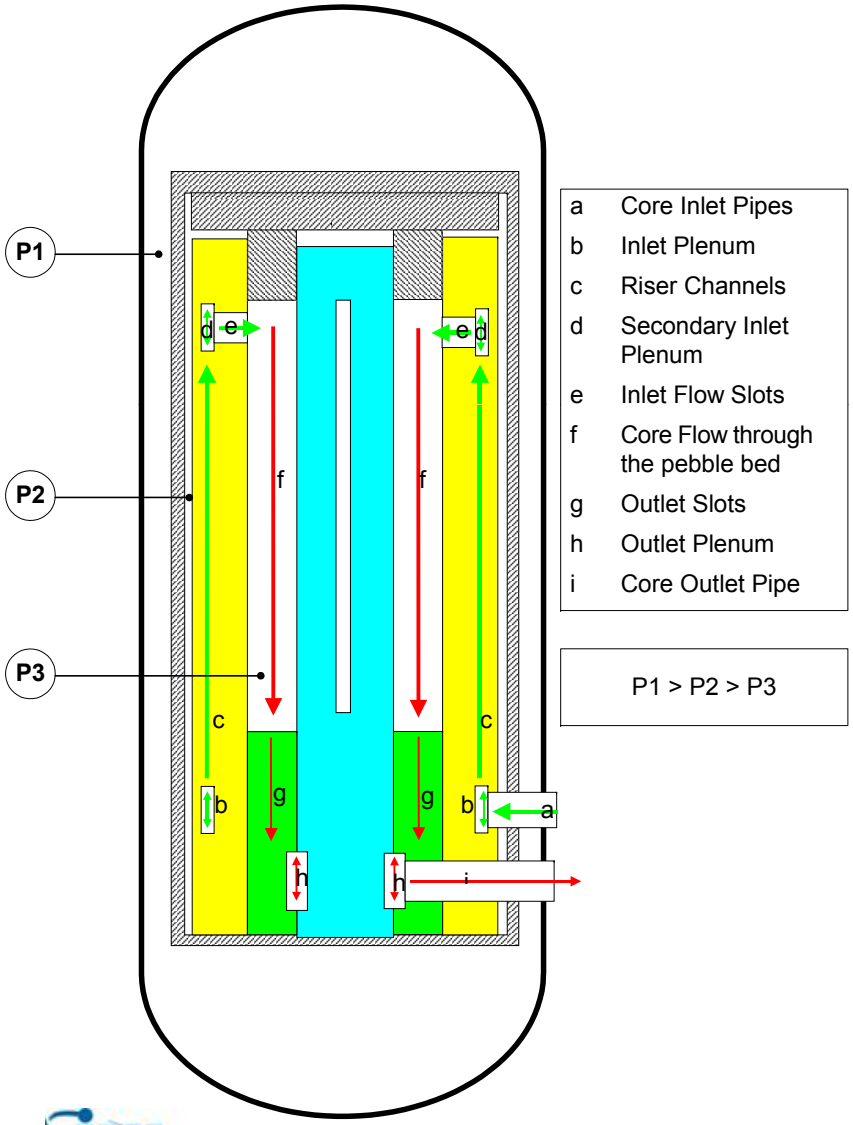

- **Principle is to always surround hot gas with cooler gas at a higher pressure**
- **This prevents any hot gas from leaking out in case of a failure**
- **This protects the metallic reactor vessel and cross vessel**

Typical Pressure Distribution of the Primary Flow Path

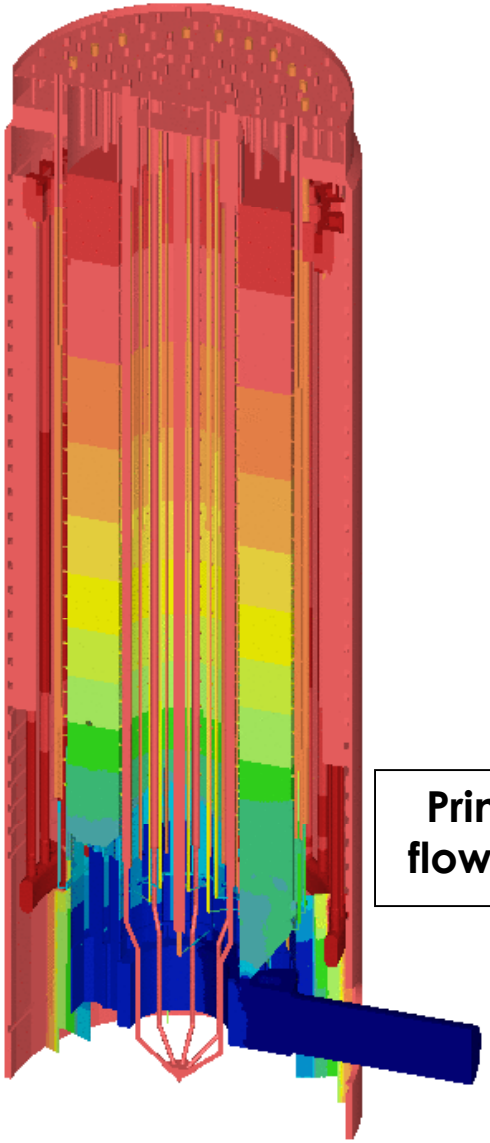

Primary flow path

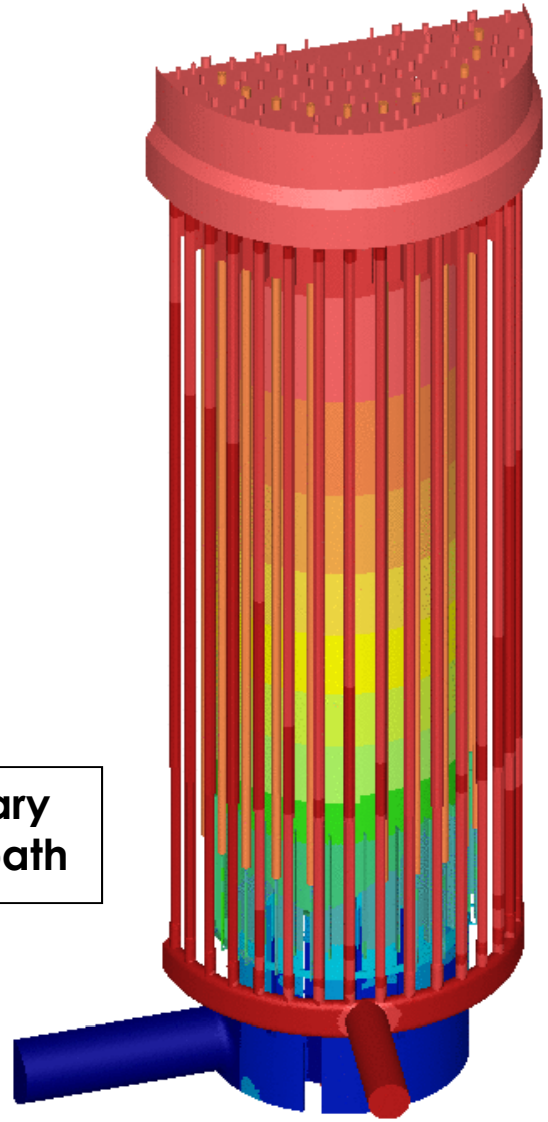

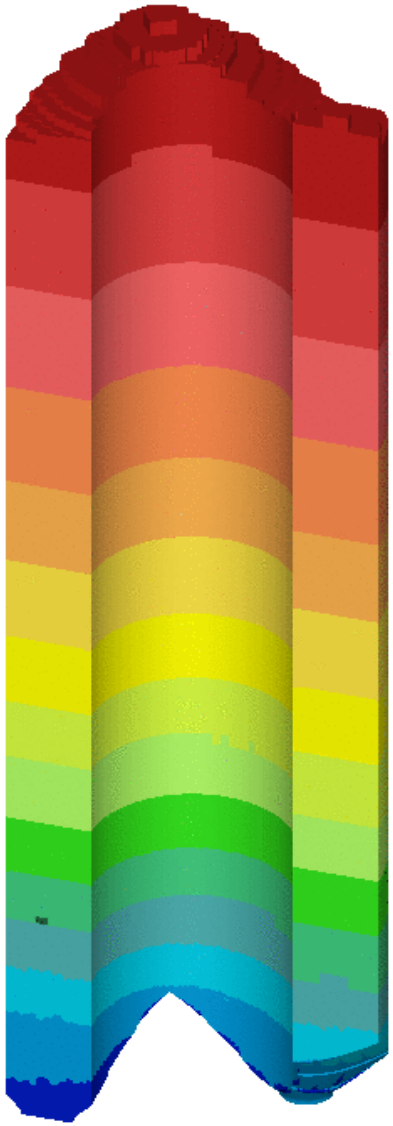

Pebble bed

Copyright PBMR

Idaho National Laboratory

P B M R

Typical Component Temperature Profiles

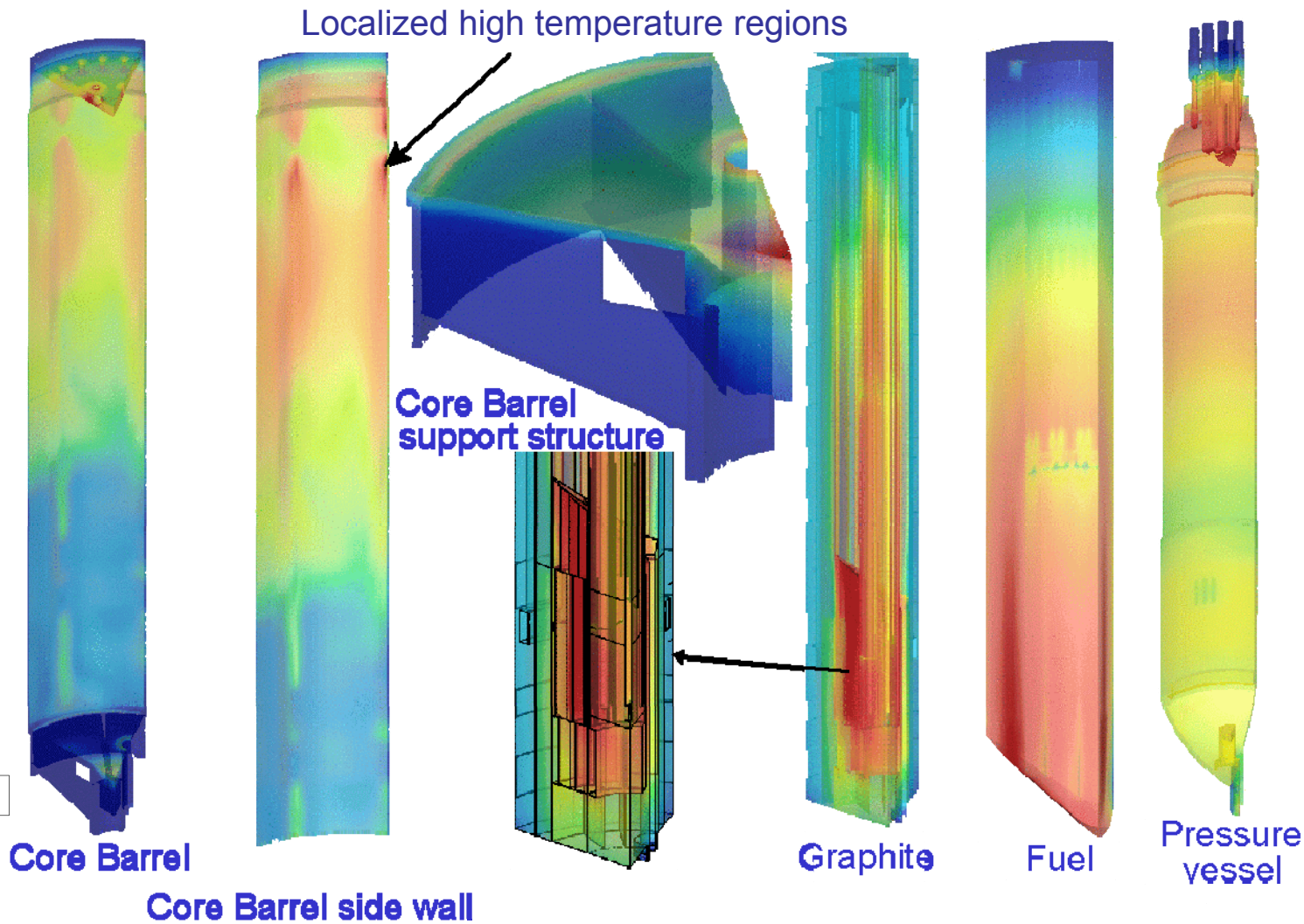

Copyright PBMR

Passive Heat Transfer Path Description

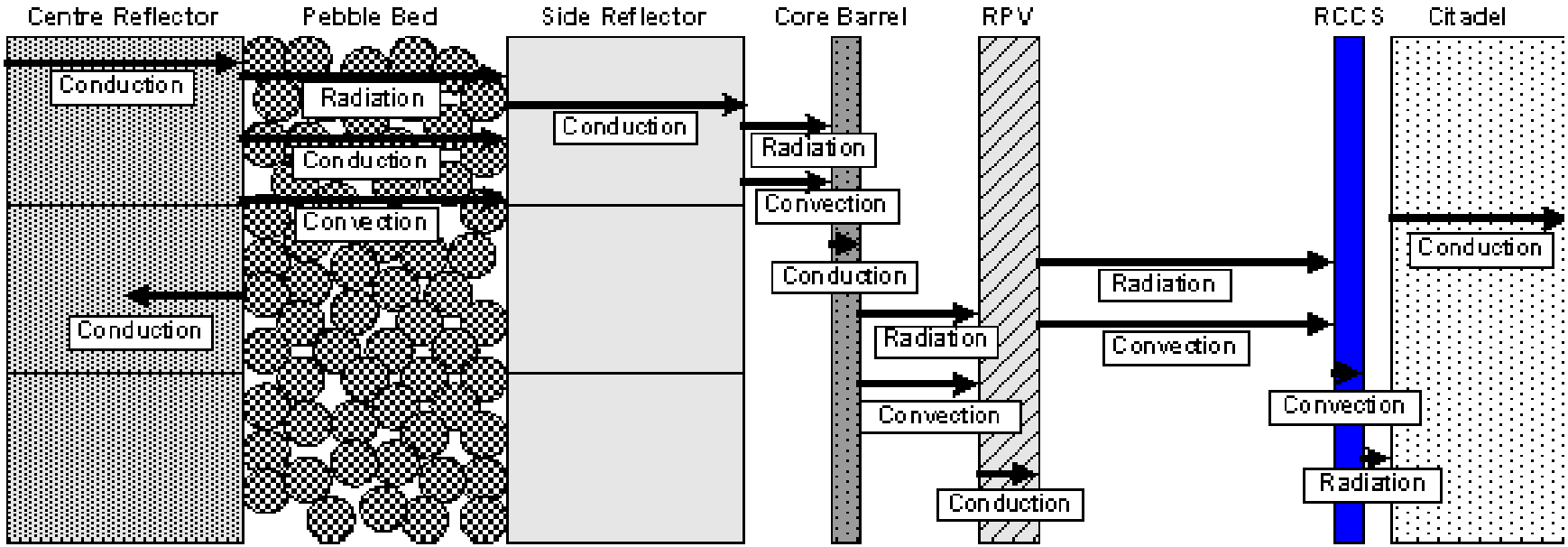

This path transfers the heat stored in the structures and the decay heat generated to the outside of the reactor vessel for removal to the environment, without exceeding component temperature limits

DLOFC = DCC = depressurized conduction cooldown
PLOFC = PCC = pressurized conduction cooldown

Effect of Different Residual Heat Removal Mechanisms on Peak Fuel Temperature

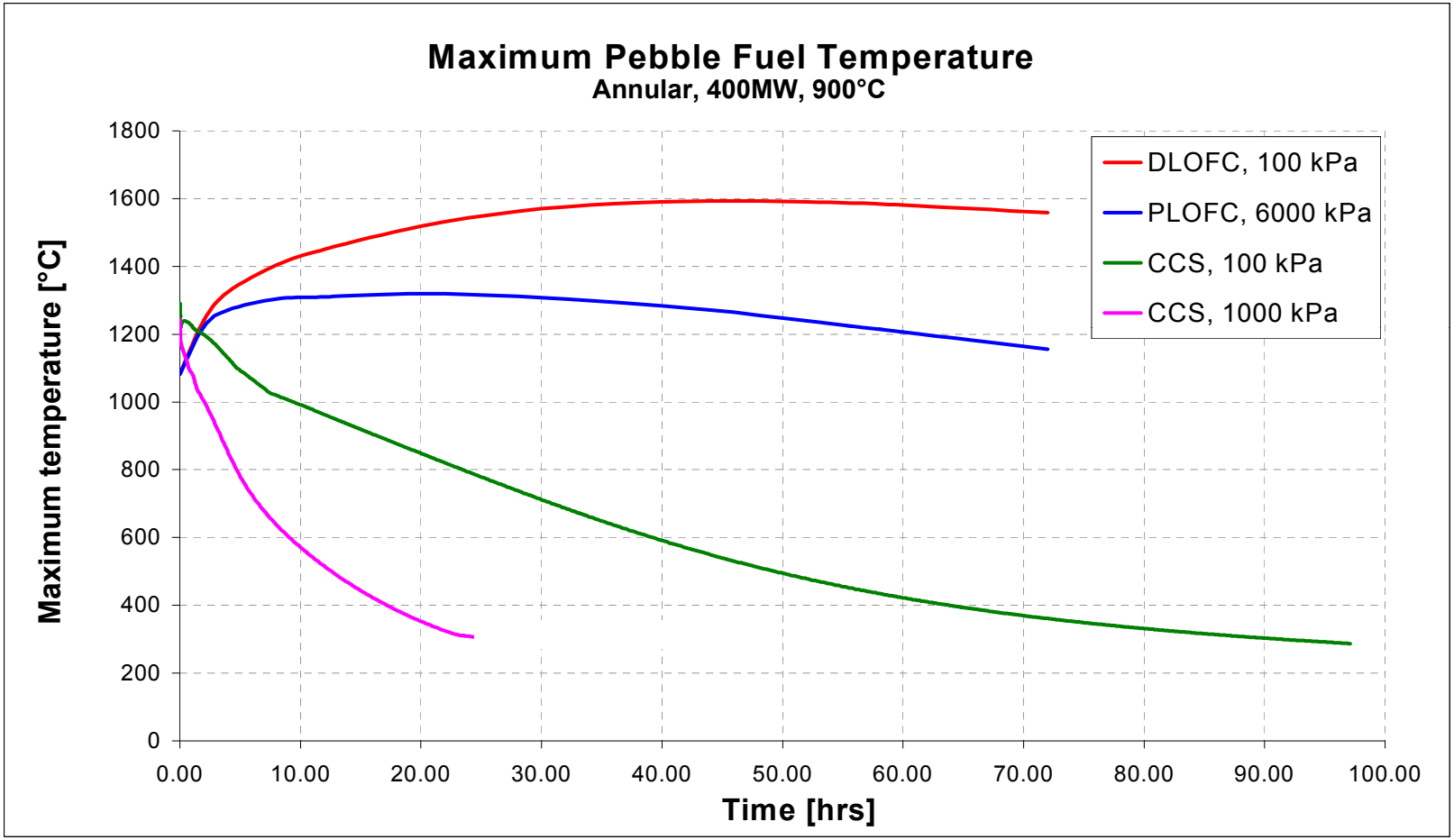

Note: CCS refers to an active residual heat removal system

Typical Results of a PCC

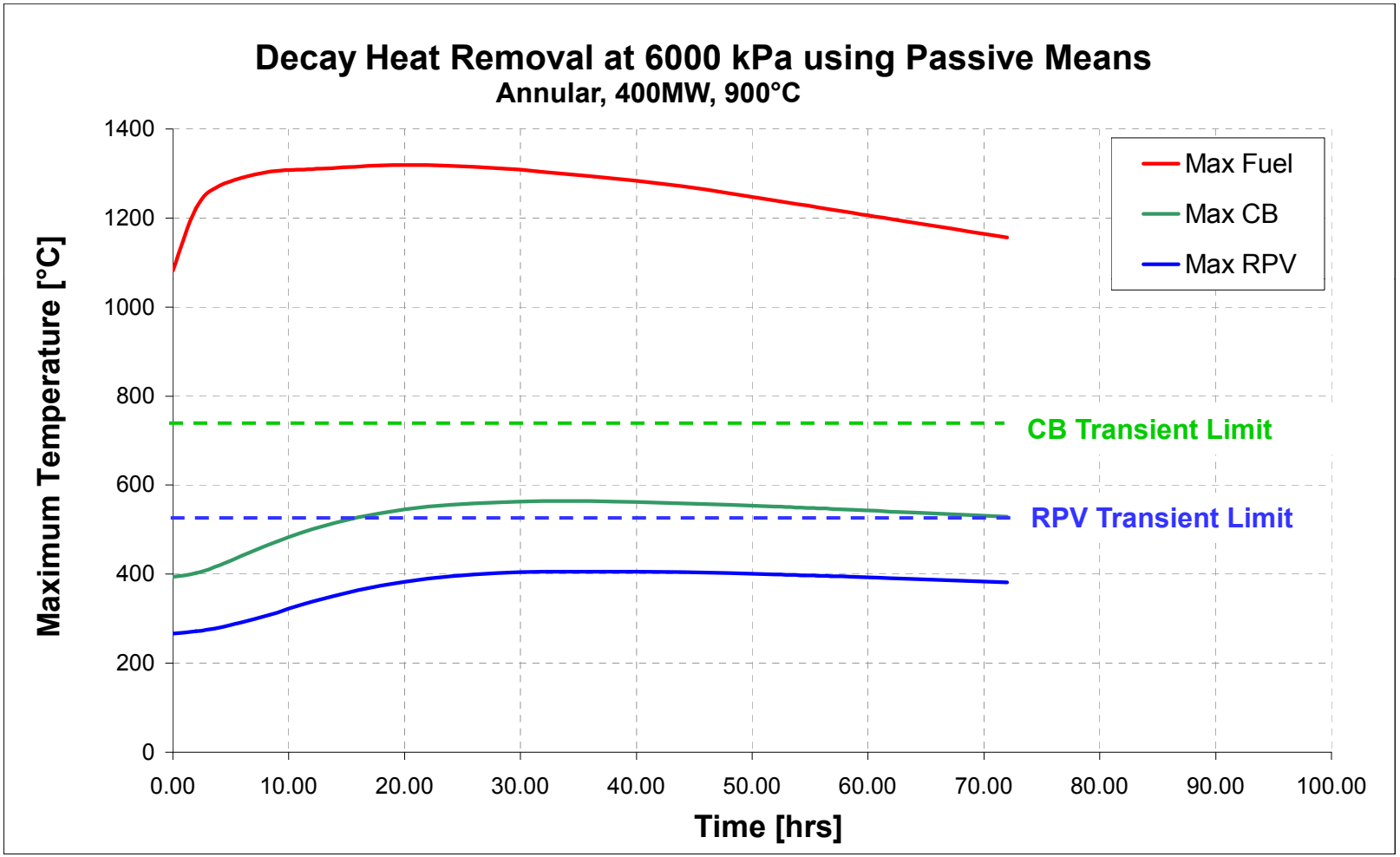

Outline

- Key T/F parameters
- Key T/F characteristics
- Heat transfer modeling
- T/F modeling challenges
- Testing and test facilities

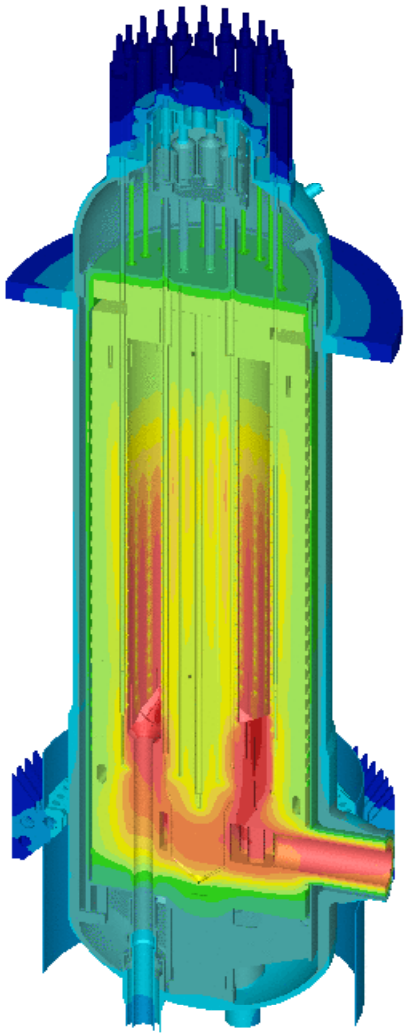

Typical Analysis Strategy

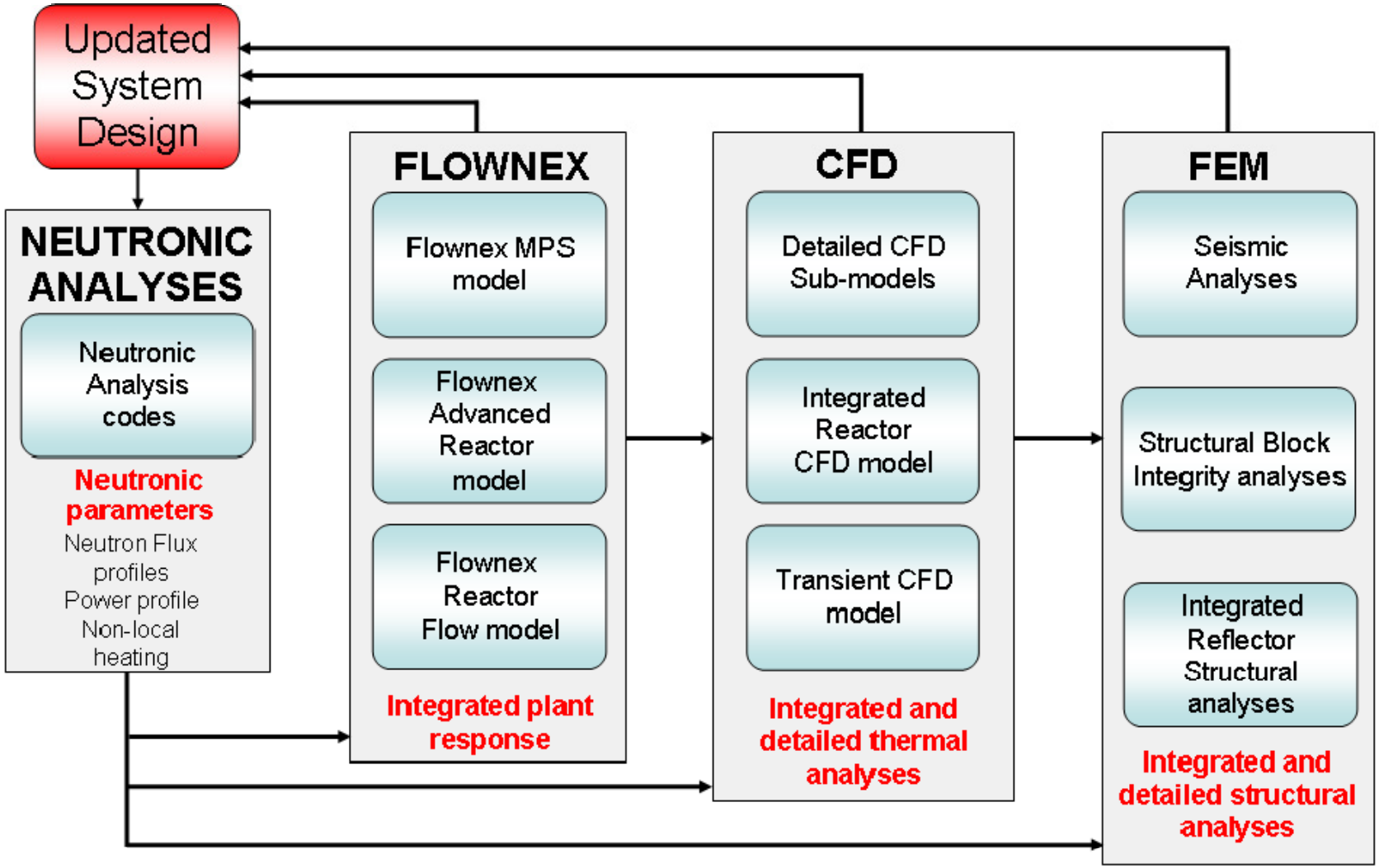

Heat Transfer in the Pebble Bed

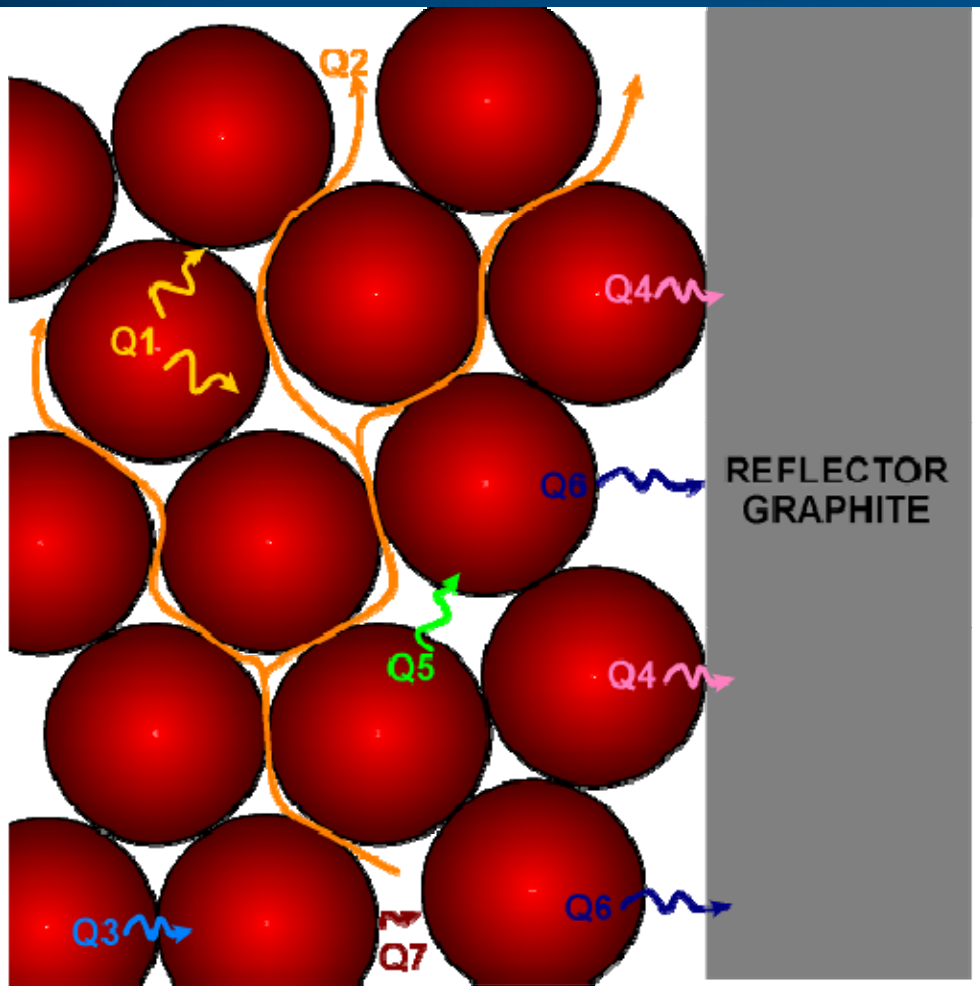

Q1: Conduction from the centre of the pebble to the surface

Q2: Convection from the pebble surface to the gas

Q3: Point contact conduction between the pebble surfaces that are in contact with one another

Q4: Point contact conduction between the pebble surfaces that are in contact with the reflector

Q5: Thermal radiation between the pebble surfaces

Q6: Thermal radiation between the pebble surfaces and the reflector

Q7: Conduction in the gas

Correlations are used in calculating many of these heat transfers

T/F Correlations

- **Helium properties**
  - Given by KTA 3102.1 Calculation of the Material Properties of Helium
- **Heat transfer from sphere to gas**
  - Given by KTA 3102.2 Heat Transfer in Spherical Fuel Elements
  - Function of ΔT, sphere diameter, Pr, Re, coolant properties, bed porosity
- **Pressure loss through a pebble bed**
  - Given by KTA 3102.3 Loss of Pressure through Friction in Pebble Bed Cores
  - Function of bed porosity, sphere diameter, coolant properties, bed height, bed diameter, mass flow
- **Effective thermal conductivity of a pebble bed**
  - Given by Zehner-Schlünder correlation
  - Function of bed porosity, sphere material properties which in turn is dependent on temperature and dose

Outline

- Key T/F parameters
- Key T/F characteristics
- Heat transfer modeling
- T/F modeling challenges
- Testing and test facilities

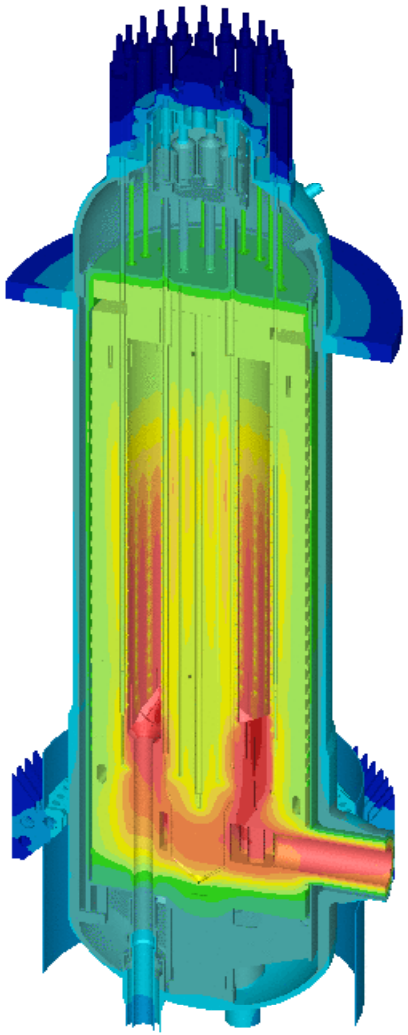

Thermal-Fluid Modeling Challenges

- **The following are typical challenges encountered when calculating the component temperatures for design input:**
  - Calculating the bypass and leak flows
    - Use of detailed 1-D flow network of all flow paths
  - Modeling the effect of bypass and leak flows
  - Calculating detailed component temperature profiles

Calculating Bypass and Leak Flows with a 1-D Flow Network

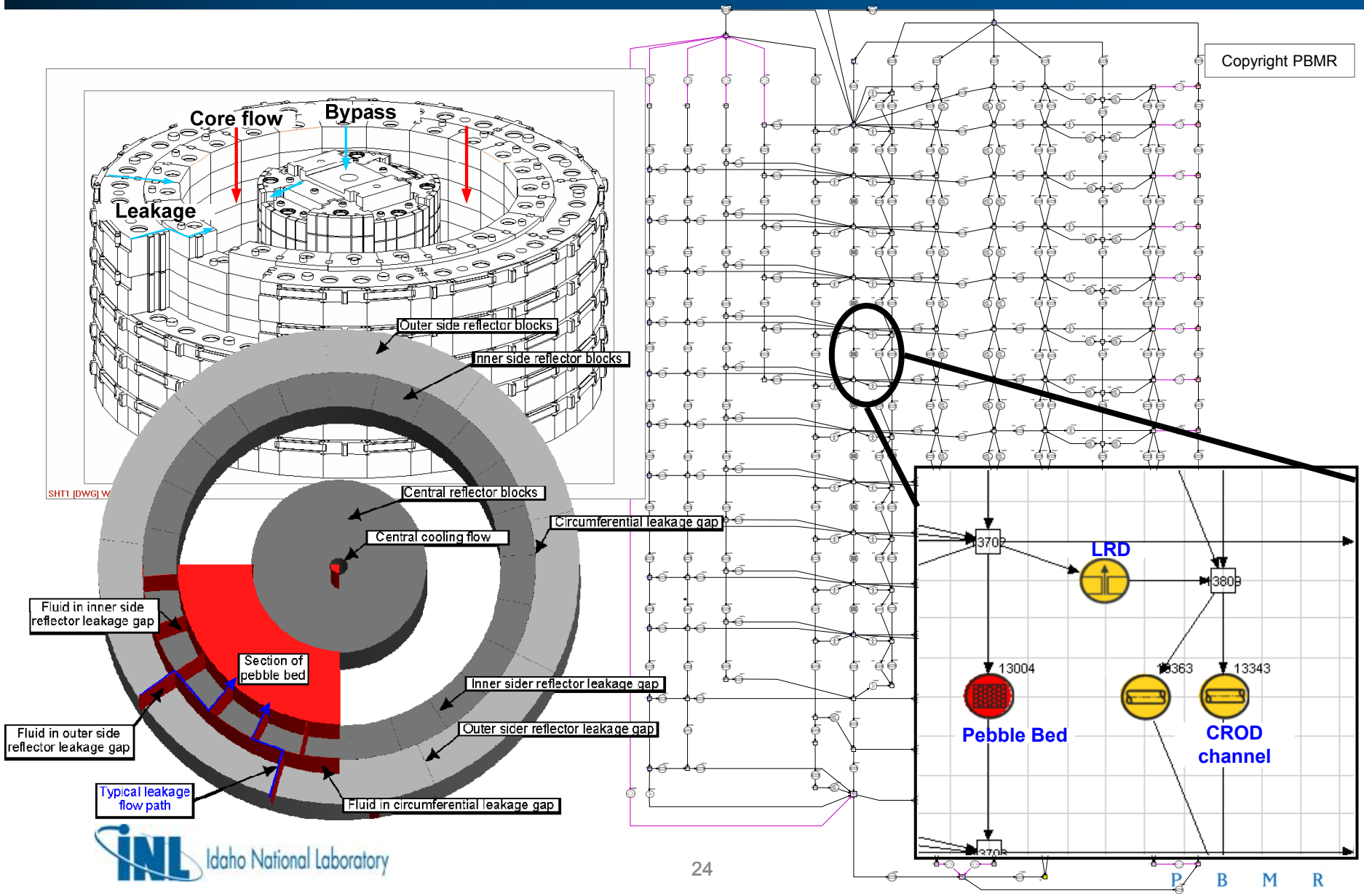

Idaho National Laboratory

Modeling the Effect of Bypass and Leak Flow

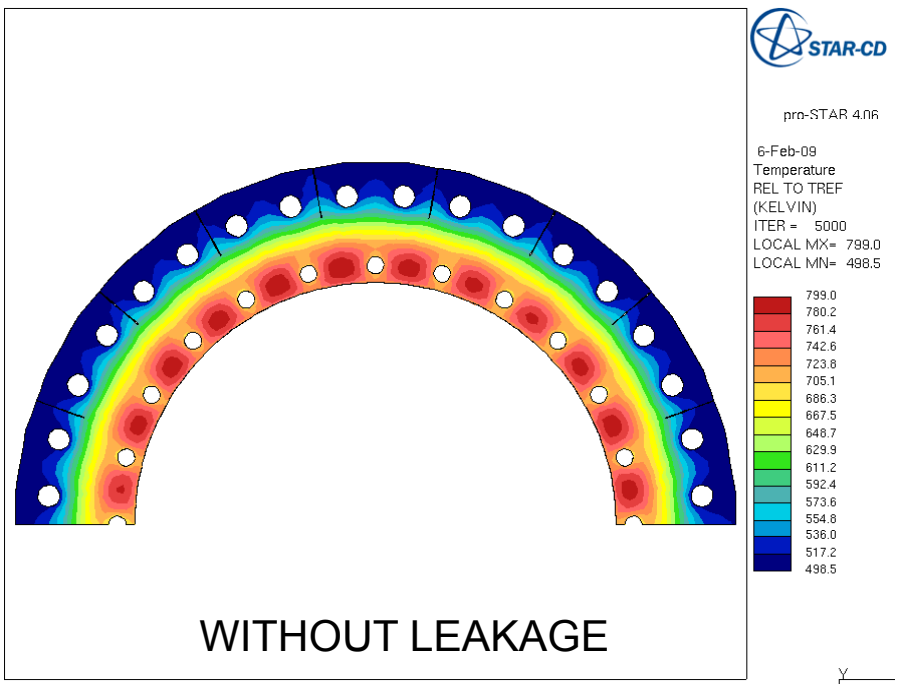

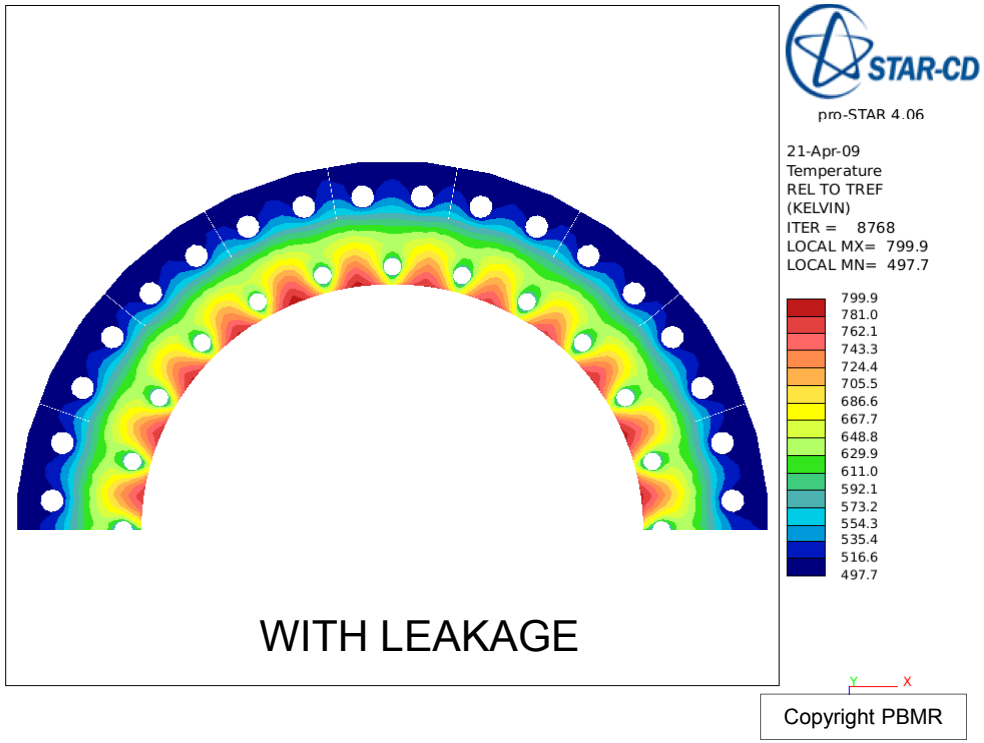

Copyright PBMR

- **Increased thermal gradients impacts on the stresses in the components**

Modelling of Design Detail

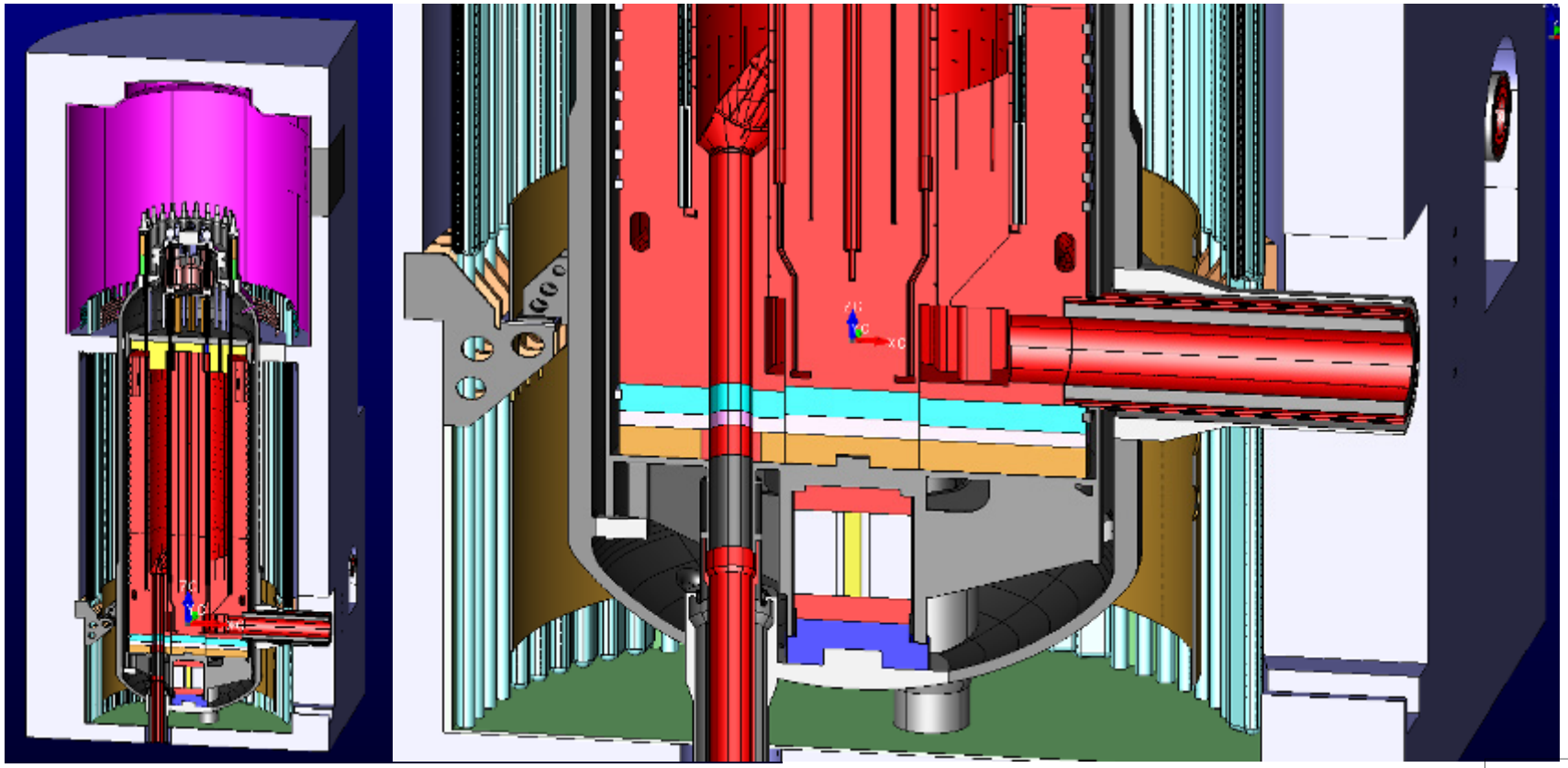

Copyright PBMR

- Modeling of design detail is important for structural design when no measurements are available from operating plants
- CFD modeling allows 3D representations of integrated designs

Calculating Component Temperatures

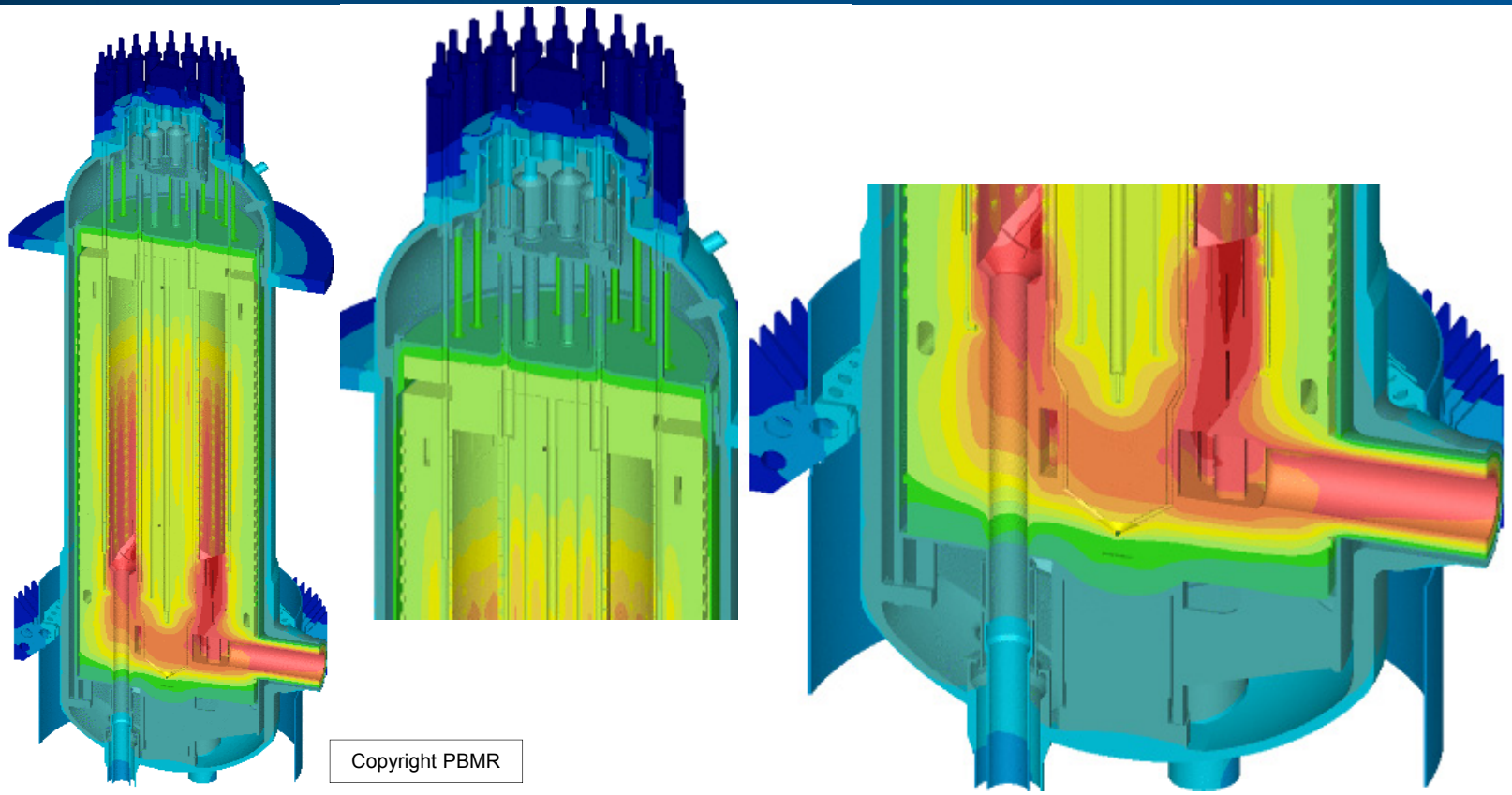

- **CFD modeling is employed to calculate detailed temperature distributions of the components. This is used downstream in the structural design.**

Outline

- Key T/F parameters
- Key T/F characteristics
- Heat transfer modeling
- T/F modeling challenges
- Testing and test facilities

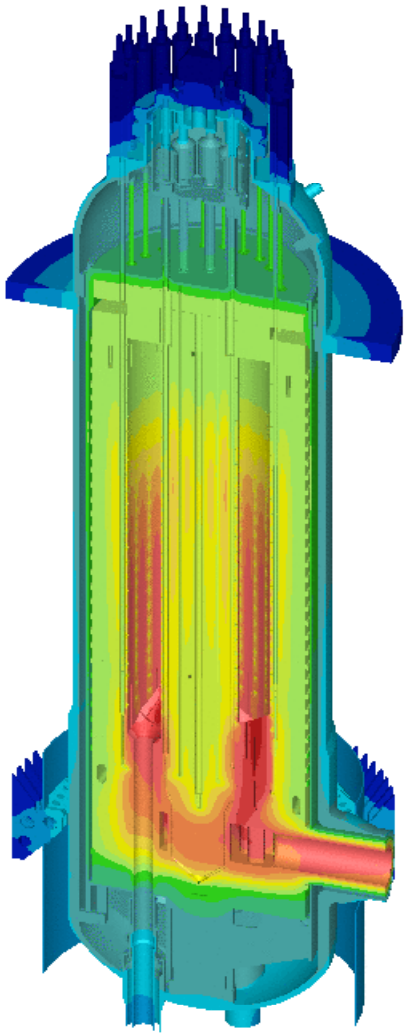

Thermal-Fluid Test Facilities

- **SANA in Germany**
  - Validate effective thermal conductivity correlation for cylindrical pebble beds
- **High Temperature Test Unit (HTTU) in South Africa**
  - Validate effective thermal conductivity correlation for annular pebble beds
  - Validate integrated natural convection in the pebble bed
  - Validate integrated forced convection in the pebble bed
- **High Pressure Test Unit (HPTU) in South Africa**
  - Validate pebble to gas heat transfer coefficient
  - Validate gas to wall heat transfer coefficient
  - Validate mixing effect
  - Validate pressure drop tests

SANA in Germany

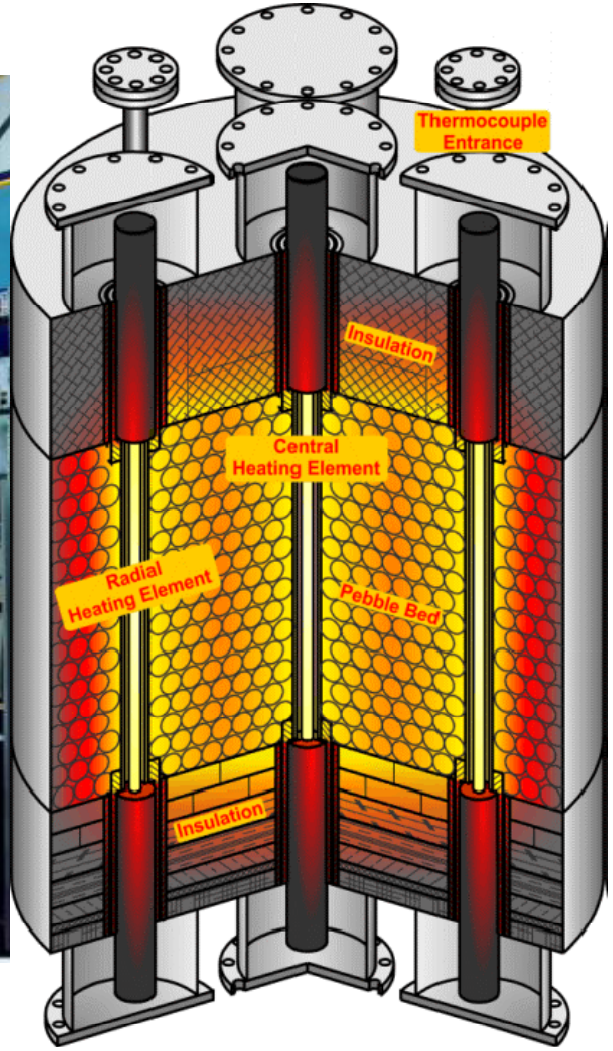

High Temperature Test Unit at NWU

- **The emphasis is on integrated effects tests to support the existing correlations used during the simulation of loss of coolant incidents**
- **Current correlations apply to a very small range of Reynolds numbers and void fractions**
- **Phenomena to be tested**
  - Natural convection
  - Forced convection
  - Effective conductivity
- **Good agreement between the experimental results and correlations validates their usage**

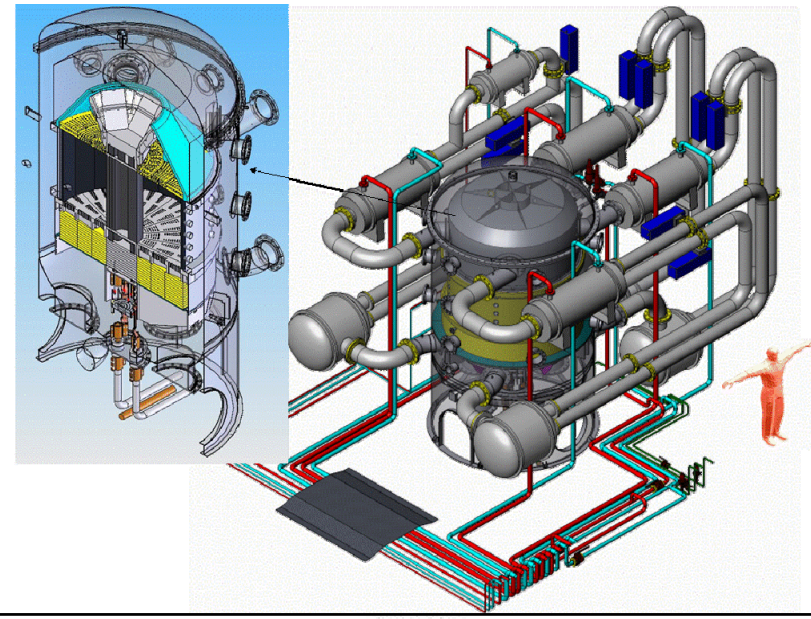

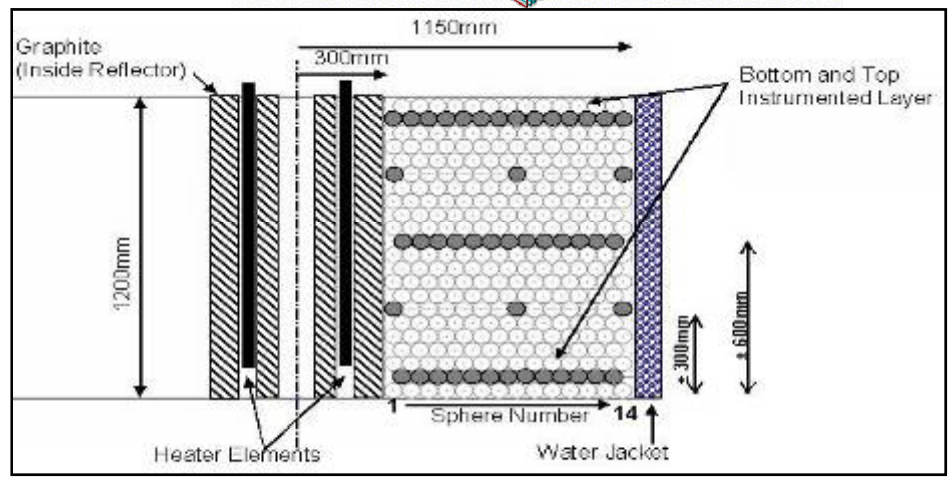

NORTH-WEST UNIVERSITY
YUNIBESITI YA BOKONE-BOPHIRIMA
NOORDWES-UNIVERSITEIT
POTCHEFSTROOMKAMPUS
Fakulteit Ingenieurswese

Idaho National Laboratory

P B M R

High Pressure Test Unit at NWU

- **Focuses on separate effects tests**
- **Phenomena tested**
  - Pressure drop
  - Heat transfer coefficient
  - Near wall effects
  - Braiding effects
  - Small cylindrical and annular pebble beds
- **Good agreement between the experimental results and correlations validates their usage**

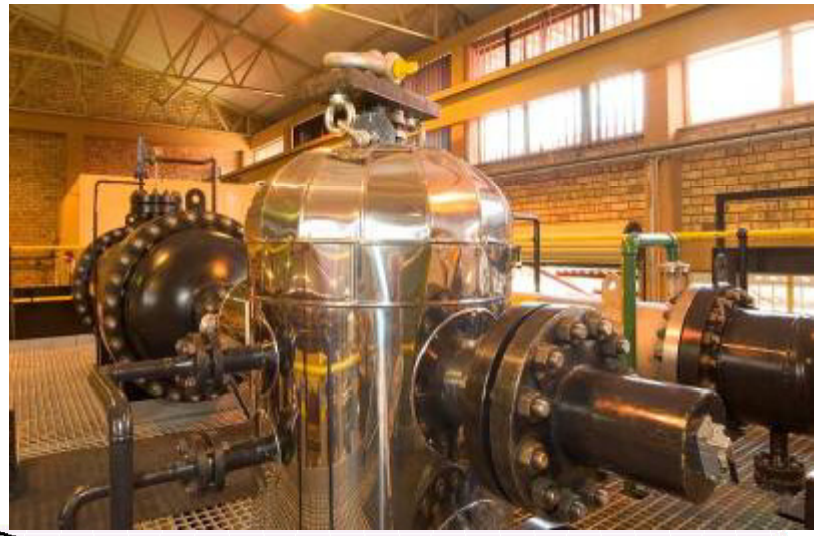

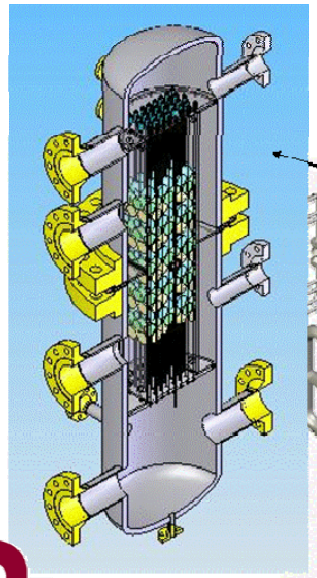

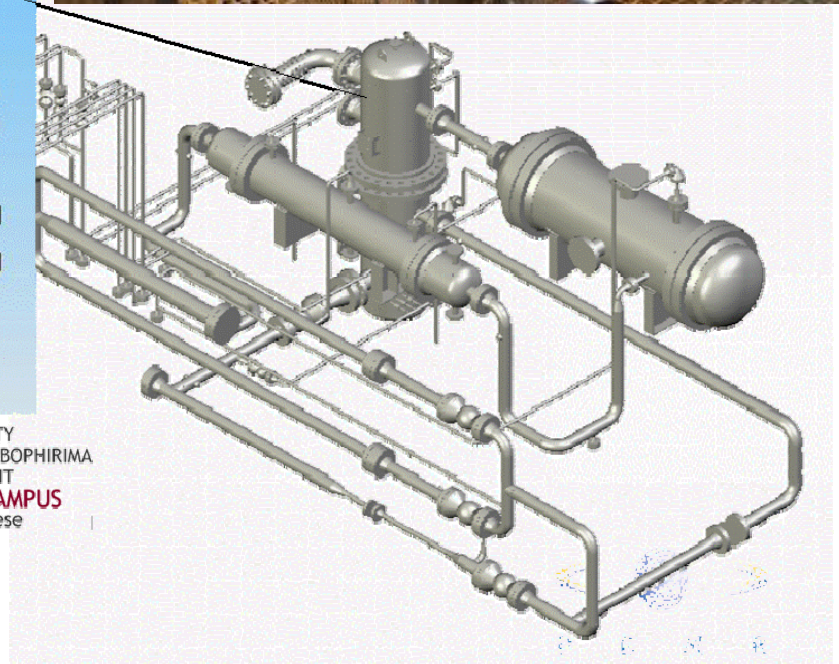

NORTH-WEST UNIVERSITY
YUNIBESITI YA BOKONE-BOPHIRIMA
NOORDWES-UNIVERSITEIT
POTCHEFSTROOMKAMPUS
Fakulteit Ingenieurswese

Idaho National Laboratory

Summary

- Flow phenomena in a pebble bed is straightforward and well characterized
- Thermo physical properties of helium is well understood and characterized
- Modeling challenges stems from defining flow paths with loosely packed blocks that creates leak flow paths
- Modern modeling and calculation methods are used to calculate design inputs for components in lieu of measurements from operating plants

Suggested Reading

- Heat and Flow Characteristics of Packed Beds, E. Achenbach, Experimental Thermal and Fluid Science, 1995, volume 10, p. 17-27
- CFD Modeling of the PBMR Reactor Unit, J.J. van Rensburg et al, Proceedings of HTR-2006, October 2006, Johannesburg South Africa
- Advances in the CFD modelling of the PBMR to improve the prediction of bypass flows, J.J. van Rensburg, Proceedings of HTR-2008, September 2008, Washington D.C. USA
- The Re-Evaluation of the AVR Melt-Wire Experiment Using Modern Methods With Specific Focus on Bounding The Bypass Flow Effects, C.F. Viljoen et al, Proceedings of HTR-2008, September 2008, Washington D.C. USA