HTGR Technology Course for the Nuclear Regulatory Commission

May 24 – 27, 2010

Module 5c

Prismatic HTGR Thermal-Fluid Behavior

Outline

- Comparison with LWRs
- Reactor internals overview/flowpaths
- Design approach and design requirements
- Inlet flow to upper plenum
- Flow through reactor core
- Outlet flow into lower plenum
- Design approach for operation with higher outlet temperatures (VHTR concepts)
- Summary

Key HTGR Core Thermal-Fluid Attributes that are Different from LWRS

- **Primary helium coolant flows downward through core**
  - Promotes transition to natural convection cooling during loss of forced circulation accidents (buoyancy forces cause hotter helium at bottom to rise)
- **Annular core for Modular HTGR designs**
  - Limits peak fuel temperatures and provides passive safety during depressurized conduction cooldown events
- **Large inlet/outlet coolant ΔT**
- **Relatively small ΔT from fuel to coolant**
  - Larger margins on fuel temperatures
- **High coolant outlet temperature [HTGR (~700°C) to VHTR (~950°C)]**
  - High thermal efficiency for electricity and process heat applications
- **Slow temperature response during accidents**
  - Large core heat capacity
  - Low power density
- **Significant column-to-column variability in flow rates and outlet temperatures**
  - Flow distributes according to flow resistance
  - Hotter columns have higher flow resistance
    - He viscosity increases with temperature

Typical Axial Variation in Fuel and Coolant Temperatures in a Modular HTGR

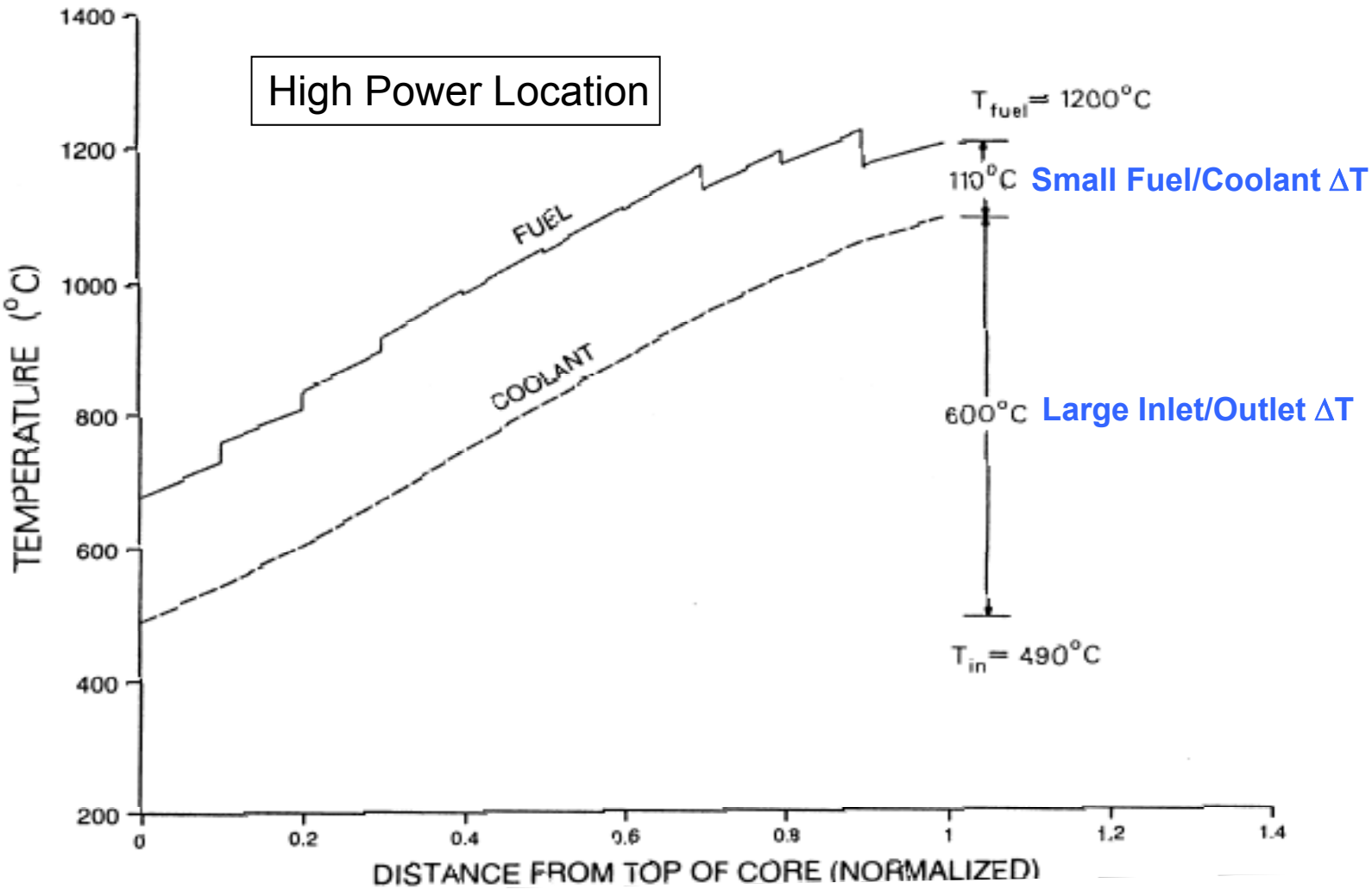

Outline

- Comparison with LWRs
- Reactor internals overview/flow paths
- Design approach and design requirements
- Inlet flow to upper plenum
- Flow through reactor core
- Outlet flow into lower plenum
- Design approach for operation with higher outlet temperatures (VHTR concepts)
- Summary

Overview of Reactor Internals and Flow Paths

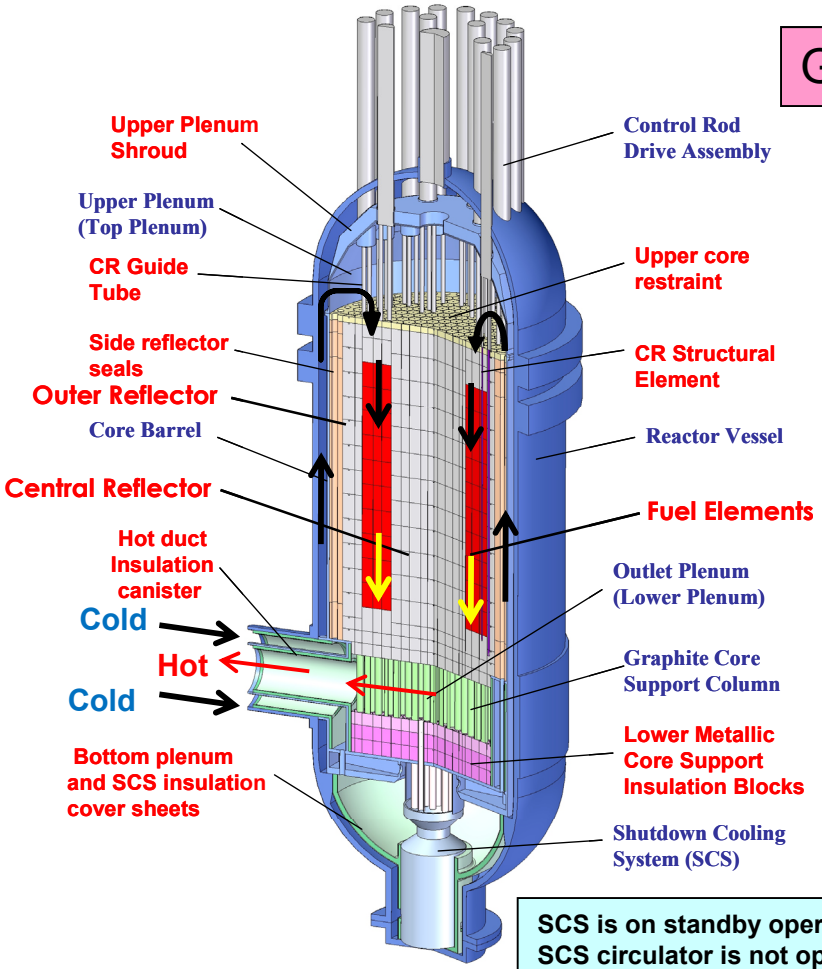

GT-MHR Design

Core Layout

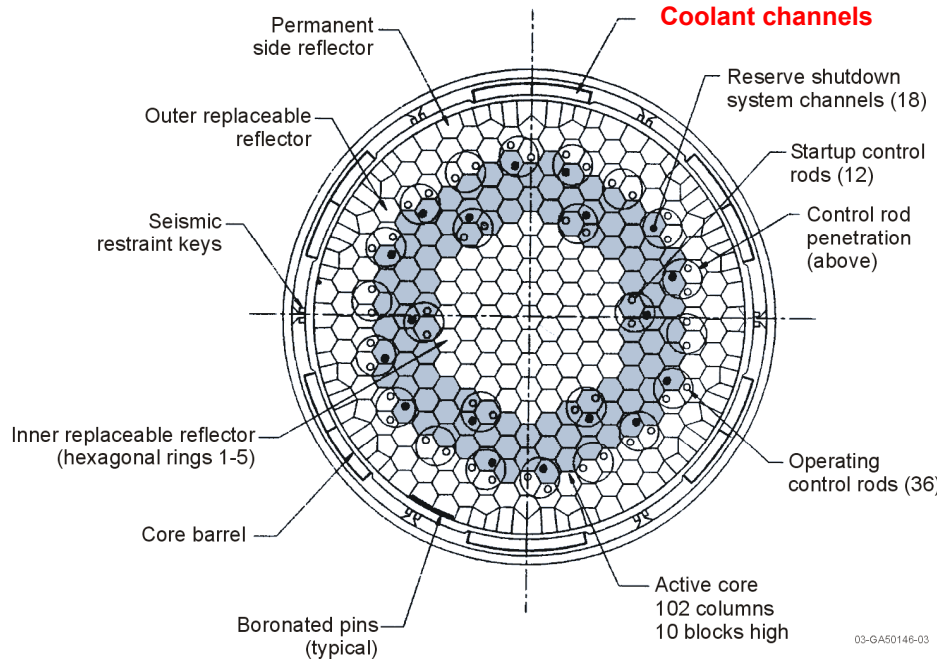

SCS is on standby operation during normal operation. SCS circulator is not operating. SCS cooling water system provides small flow to SCS HX to prevent thermal shock when SCS switches to active mode. Parasitic heat losses during standby operation are ~ 0.2%.

Outline

- Comparison with LWRs
- Reactor internals overview/flow paths
- Design approach and design requirements
- Inlet flow to upper plenum
- Flow through reactor core
- Outlet flow into lower plenum
- Design approach for operation with higher outlet temperatures (VHTR concepts)
- Summary

Core Thermal-Fluid Interfaces

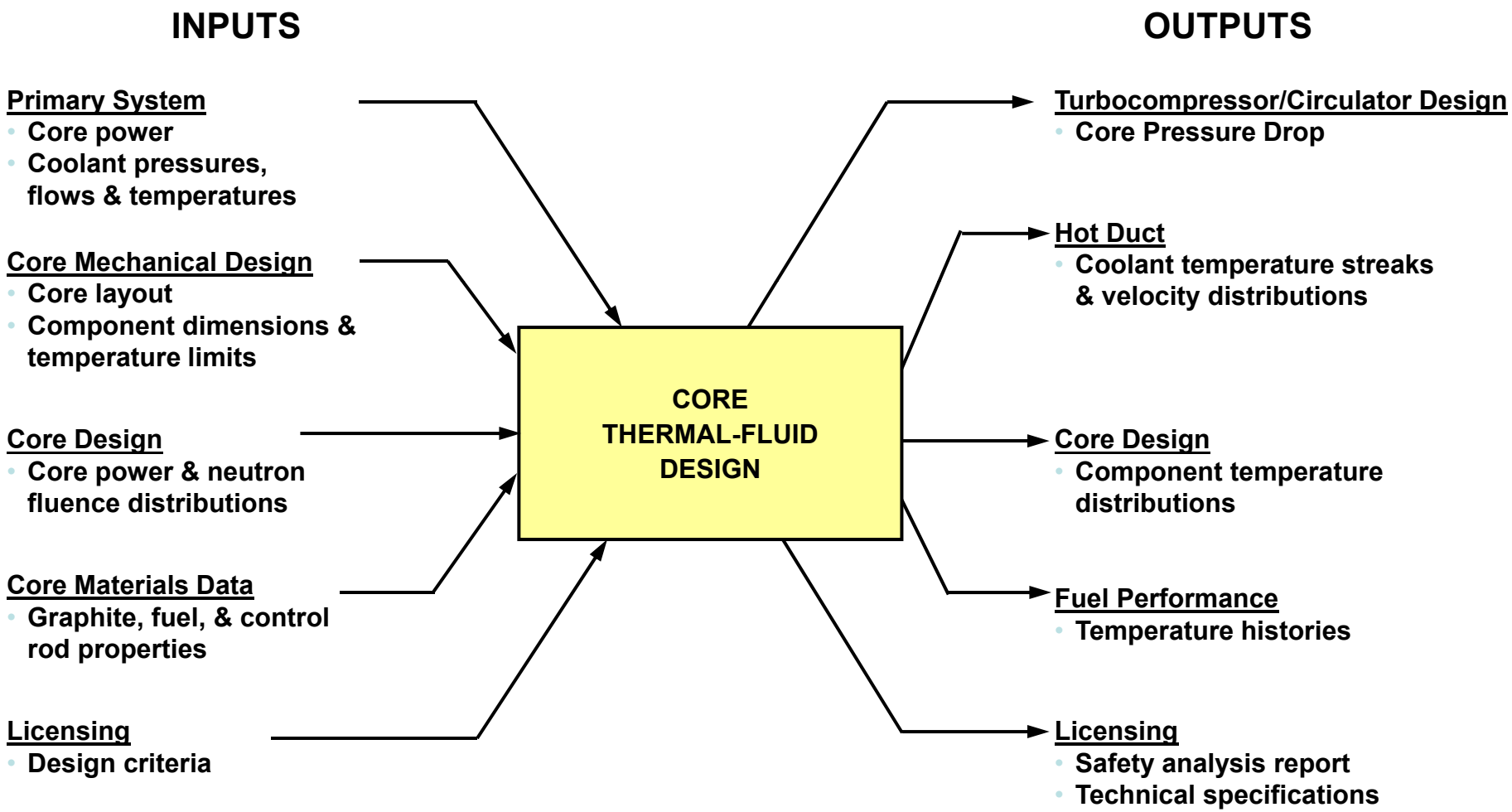

Core Thermal-Fluid Design Requirements

Component	Requirement	Basis
Fuel	≤ 1250°C (Cycle Average) ≤ 1600°C (Accident)	Fuel Integrity, Fission Prod Release
Control Rods	≤ 927°C (Sustained) ≤ 940°C (Accident, cum ≤ 3000 h) ≤ ~2000°C (Sustained)	Hast XR allowable Temp C/C Composite allowable Temp estimate
Graphite Blocks	Limit $^{dT}/_{dx}$ Temp ≤ 2100°C (Sustained) Temp ≤ 2700°C (Accident) Neutron Fluence ≤ ~8×10^{21} n/cm^2	Stress (Structural Integrity) Stress, Chem attack, Irrad creep Stress, Chem attack Stress, Irrad induced dim chg, creep
Core Array	Core Pressure drop ≤ ~70 KPa (~10 psi)	Flow-induced Vibrations
Hot Duct	Sustained Temp / Trans Temp (≤ 3000h) ≤ 760°C / ≤ 871°C ≤ 899°C / ≤ 938°C ≤ 927°C / ≤ 940°C ≤ ~1400°C / ≤ ~1600°C ≤ ~2000°C / ≤ ~2400°C	Temp Limits for T/B Cover Plates Alloy 800H Hastelloy X Hastelloy XR SiC/SiC Ceramic Composite C/C Composite

Materials designed for higher temperatures (C/C composites, Hastelloy) require qualification by ASME for nuclear applications.

Outline

- Comparison with LWRs
- Reactor internals overview/flow paths
- Design approach and design requirements
- Inlet flow to upper plenum
- Flow through reactor core
- Outlet flow into lower plenum
- Design approach for operation with higher outlet temperatures (VHTR concepts)
- Summary

Inlet Flow to Upper Plenum

- **Flow geometry (reference design)**
  - Upward through channel boxes between core barrel
- **Flow geometry (alternative design)**
  - Upward through risers in permanent side reflector
  - Plenum in upper graphite structure
  - Reduces vessel temperatures (normal operation and accidents)
  - Reduces upper plenum metallic temperatures (accidents)
- **Thermal-fluid phenomena/correlations**
  - Turbulent flow in channel geometries
    - Nu = F(Re, Pr)
  - Small temperature rise from parasitic heat flow in radial direction
- **Design/modeling approaches and challenges**
  - Minimize variations in circumferential flow
  - Multi-dimensional network or CFD codes to estimate circumferential flow distribution

Alternative Flow Geometry with Vessel Cooling

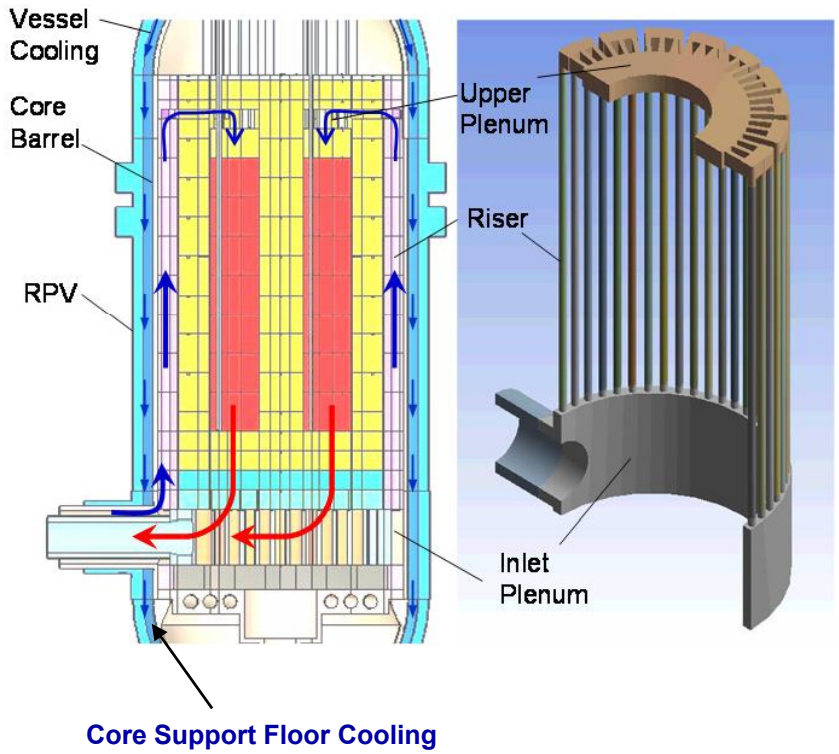

Possible Design Concept for VHTR with Higher Coolant Inlet and Outlet Temperatures

Outline

- Comparison with LWRs
- Reactor internals overview/flow paths
- Design approach and design requirements
- Inlet flow to upper plenum
- Flow through reactor core
- Outlet flow into lower plenum
- Design approach for operation with higher outlet temperatures (VHTR concepts)
- Summary

Flow Through Reactor Core

- **Flow geometry**
  - Turbulent flow through long coolant holes (~1.6 cm diameter, total length > 8 m)
  - Provides most of primary circuit flow resistance (~10,000 holes)
  - Pressure drop estimated using correlations that account for actual graphite surface roughness
- **Subchannel analysis using unit-cell geometry**
  - Represents a block or a portion of a block at each axial level
  - Heat generation in fuel and graphite
  - Conduction in fuel and graphite
  - Conduction and radiation across gap
  - Convection to coolant characterized by Nu = F(Re, Pr), Re ≅ 50,000

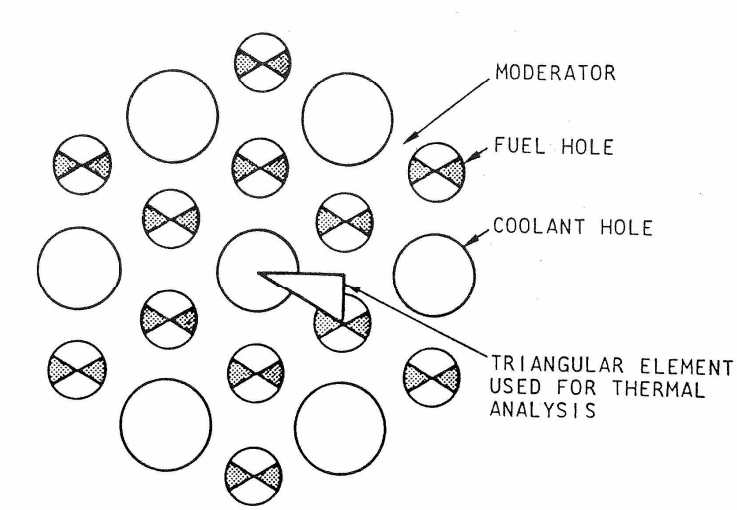

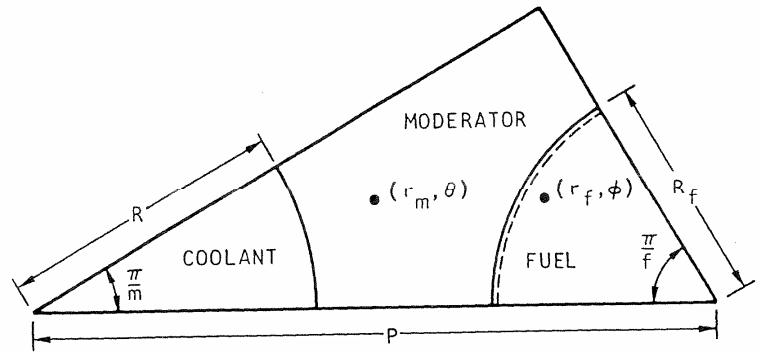

Finite-element and/or Network Analyses Used to Verify Quasi-1-D Calculations and Estimate Shape/Correction Factors

ANSYS Fuel Block Mesh
(1/12 Symmetry)

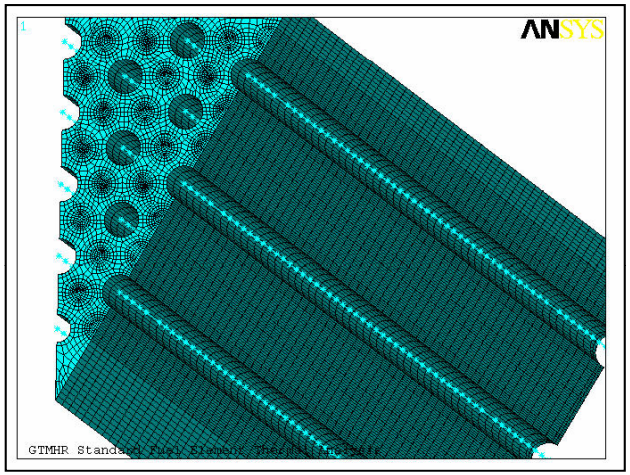

SINDA/FLUINT Nodal
Network Model

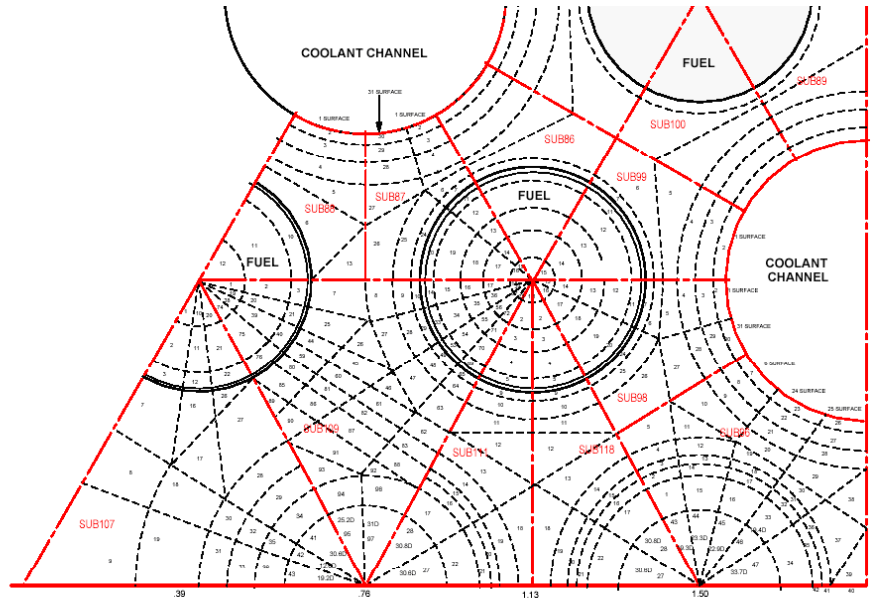

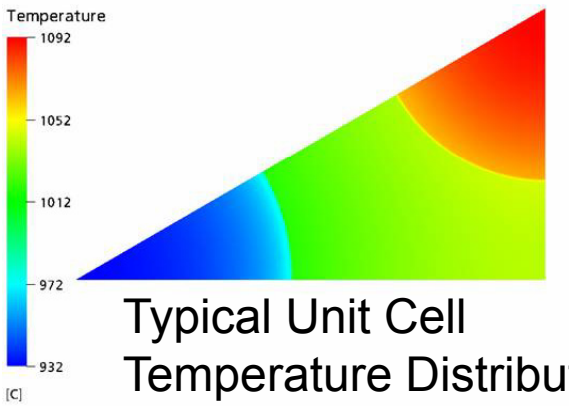

Typical Unit Cell
Temperature Distribution

30 deg. Sector ANSYS Model Has Been Developed as Part of NGNP Conceptual Design Studies

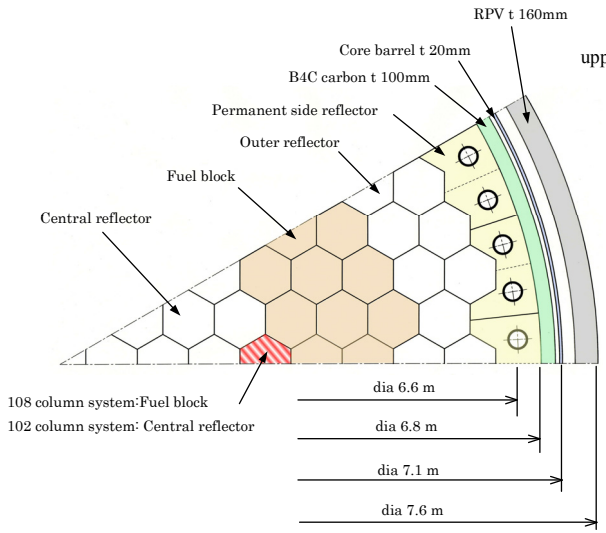

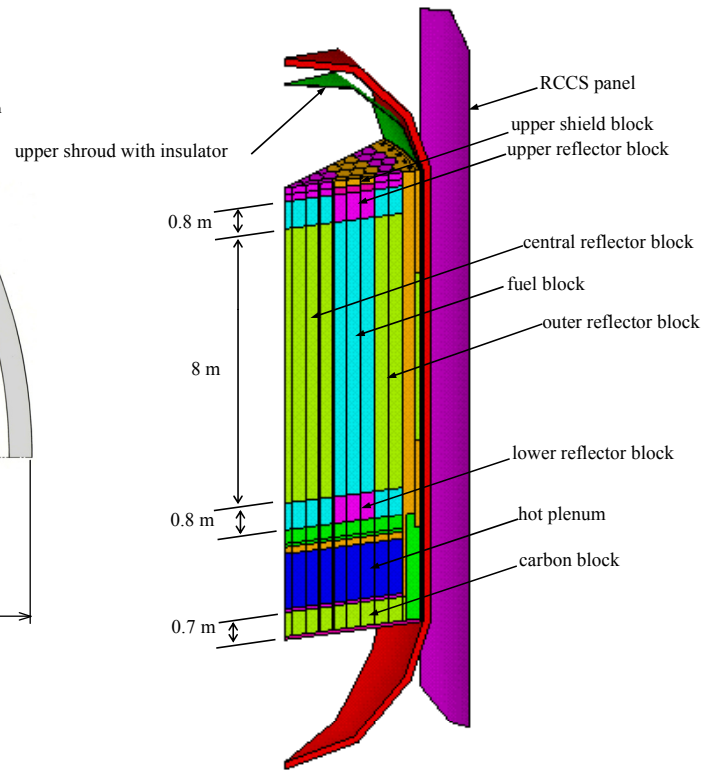

RCCS Model

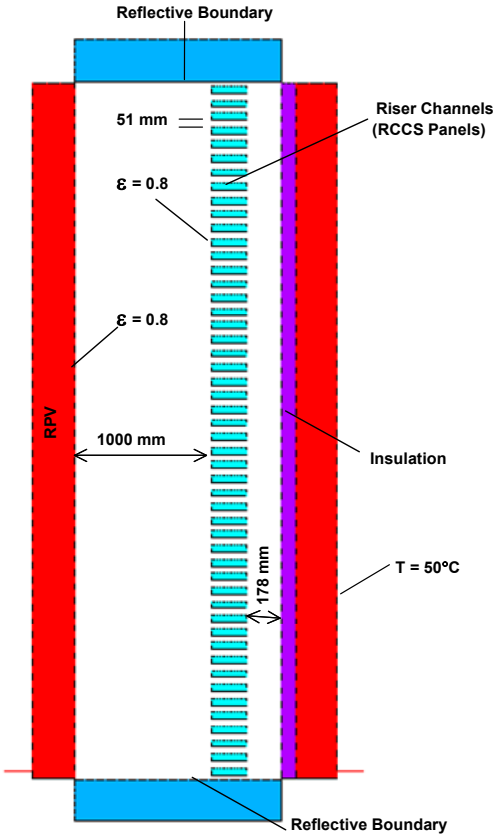

Typical Axial Fuel Temperature Distributions (GT-MHR)

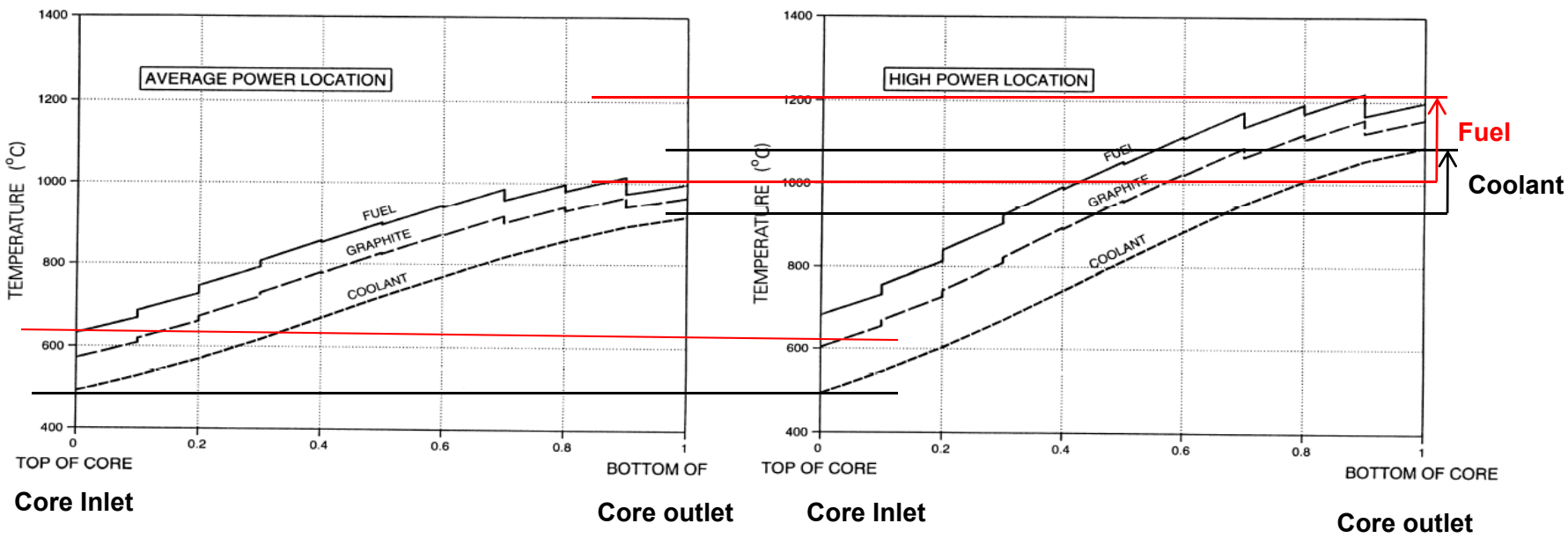

Typical Fuel Column Radial Temperature Distributions

T/H Analytical Model

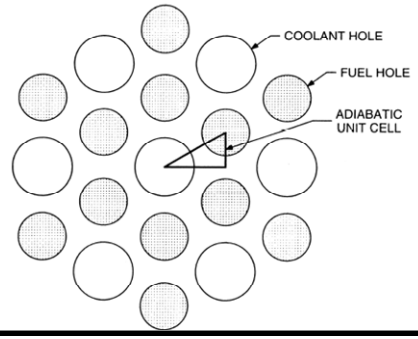

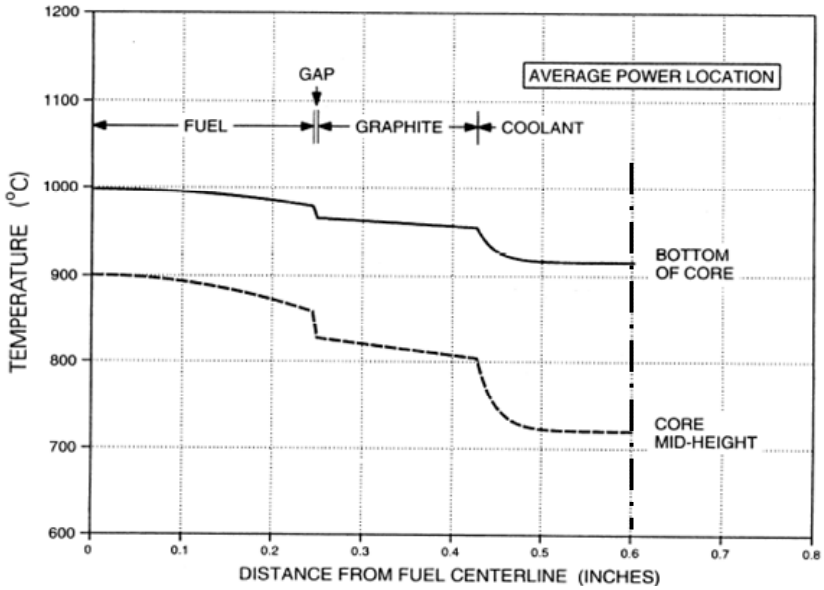

Fuel Rod Centerline

Coolant Hole Centerline

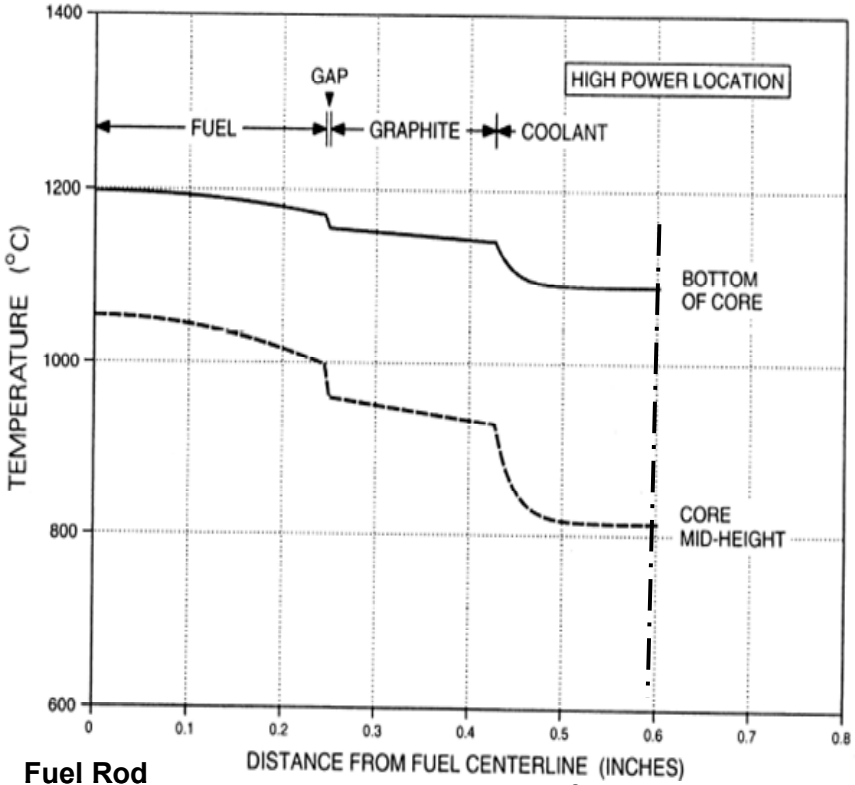

Fuel Rod Centerline

Coolant Hole Centerline

Typical Fuel Temperature Distributions

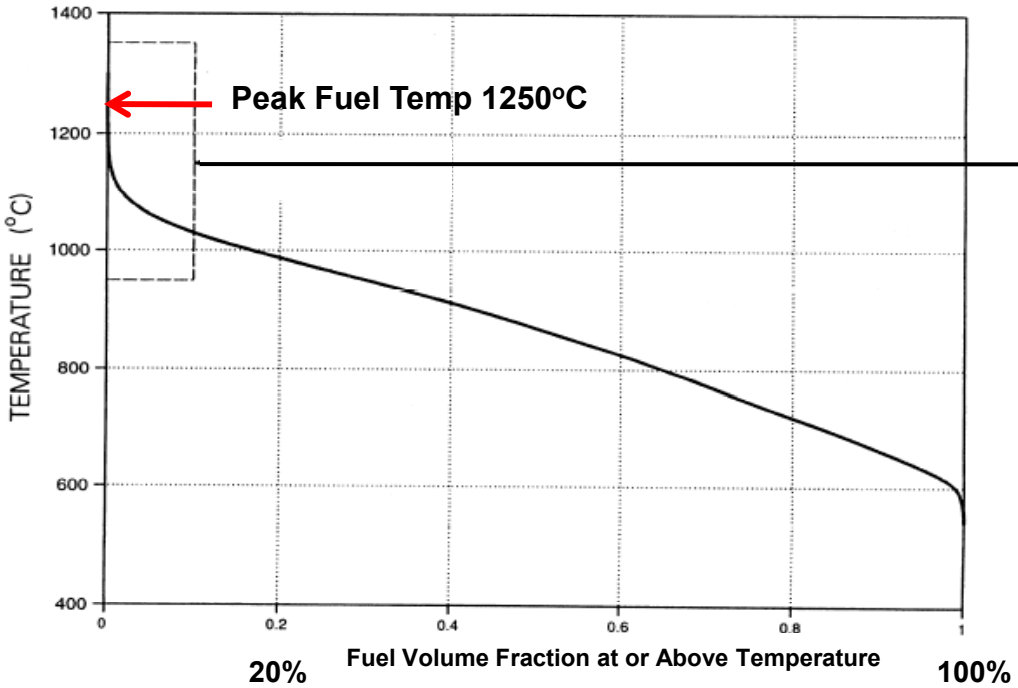

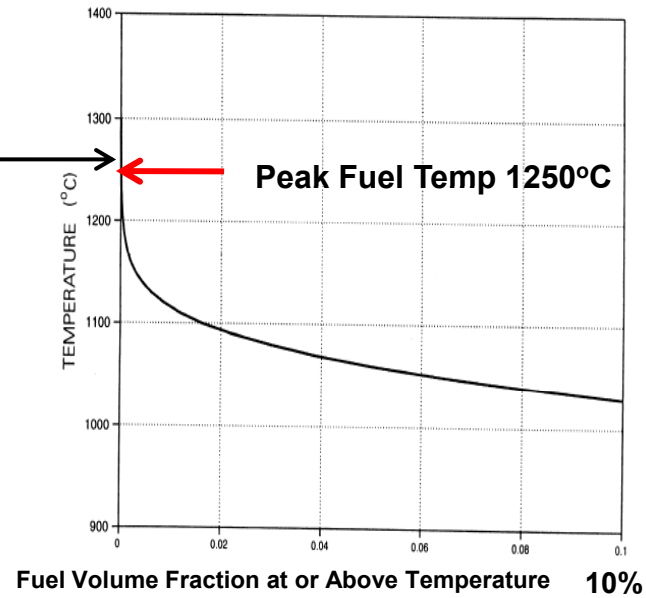

Volume Fraction of Fuel	@ Temp Above
0.5%	1150 C
1.6%	1100 C
5.9%	1050 C
17%	1000 C

Relatively small fraction of core above 1000°C

Core Pressure Drop and Flow Distribution

- **Low mach number approximation is valid for HTGR flow regimes**
  - Algebraic equations can be derived for ΔP
- **Single channel:**

$$\Delta P = \frac{1}{2\rho}\left(\frac{\dot{m}}{A}\right)^2\left[K_{in} + \frac{4fL}{D}\left(\frac{\overline{T}}{T_{in}}\right) + \frac{T_{out} - T_{in}}{T_{in}} + \sum_{j=1}^{n} K_j\left(\frac{T_j}{T_{in}}\right) + K_{out}\left(\frac{T_{out}}{T_{in}}\right)\right]$$

Inlet Loss | **Wall Friction** | **Acceleration** | **Losses at axial block boundaries** | **Outlet Loss**

Flow distribution to individual columns is determined by the relative flow resistance of the columns. Hotter columns tend to "starve" themselves of flow, because helium viscosity increases with temperature (~ 0.7 power dependence). This phenomenon emphasizes the importance of minimizing column-to-column power peaking factors.

Bypass Flow and Cross Flow

- **Bypass flow**
  - Defined as any flow that bypasses coolant holes
  - Flow through vertical gaps between blocks
  - Small gaps are needed for refueling and to augment cooling of fuel compacts near block edges.
- **Cross flow**
  - Horizontal flow through gaps at block axial boundaries
  - Driven by lateral pressure gradients
  - Need to prevent too much "short circuiting" of flow before it reaches inlet plenum
- **Design considerations**
  - In general, bypass and cross flow should be minimized
  - Some bypass flow needed to cool control rods
  - Some vertical bypass flow is needed to augment cooling of fuel compacts near block boundaries
  - Some short circuiting of flow to lower, hotter portions of core can be beneficial (axial flow distributed tilted to hotter portions of core)

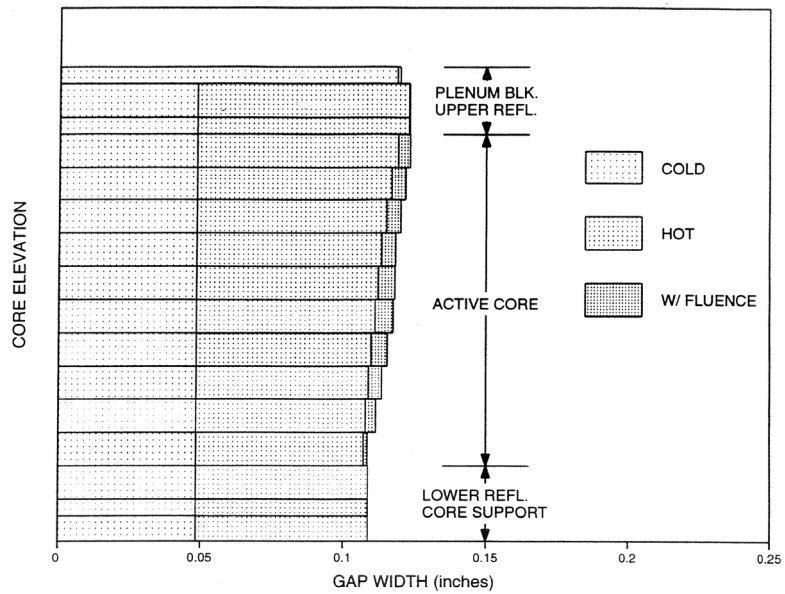

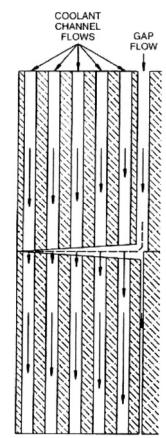

Cross flow gap

Control Rod Channel Flow Is a Special Design Consideration

PROBLEM

- Need adequate flow when rod inserted
- Need minimum flow when rod withdrawn

SOLUTION

- Low flow resistance through control rod channel when rod inserted
- Set flow resistance at channel exit and entrance to obtain required flow

RESULTS

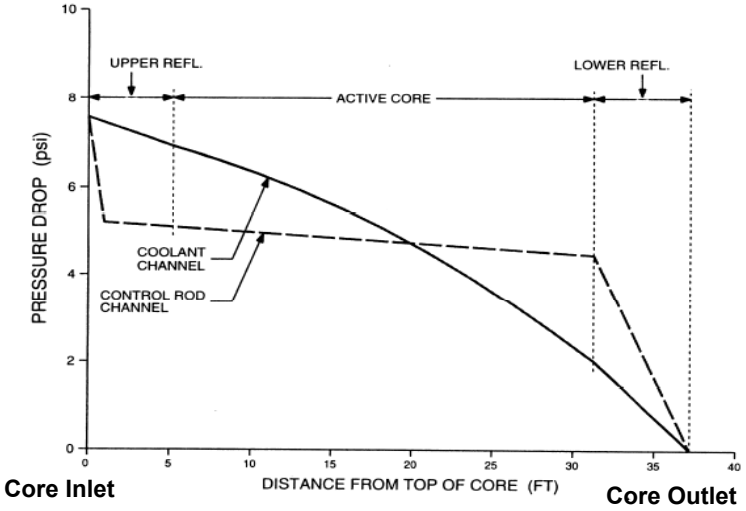

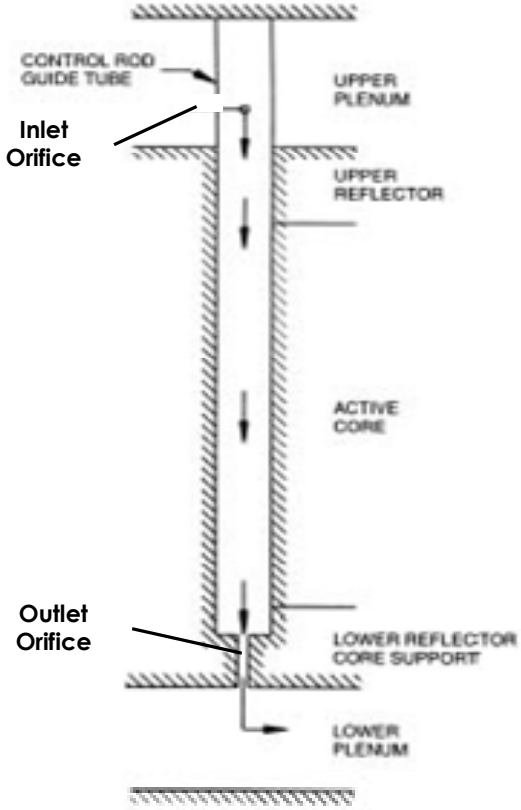

For C-C control rods, less cooling may be required, which reduces bypass flow.

Flow Network Models Can be Used to Calculate the Flow Distribution

GAMMA+ Model (KAERI)

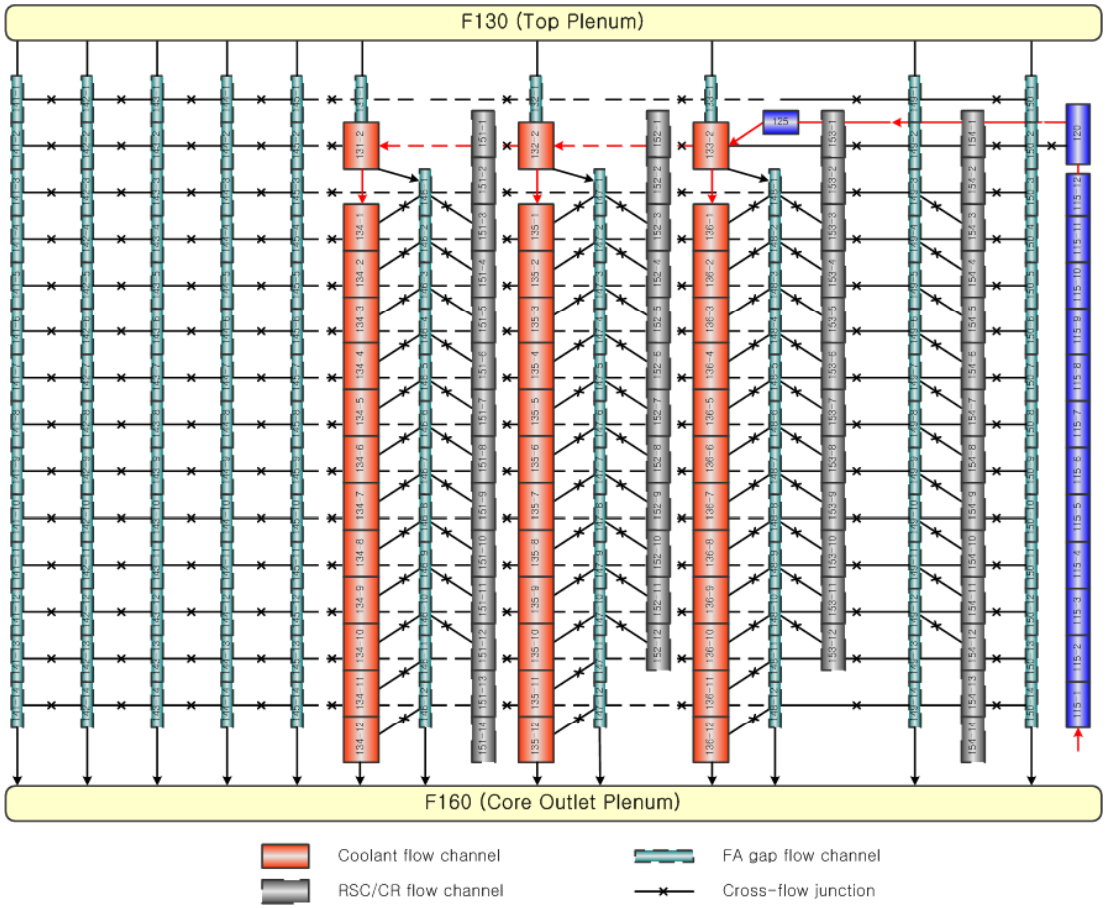

Gap flow resistances can be determined through testing and CFD flow modeling

Typical Core Flow Distributions

Beginning of Cycle

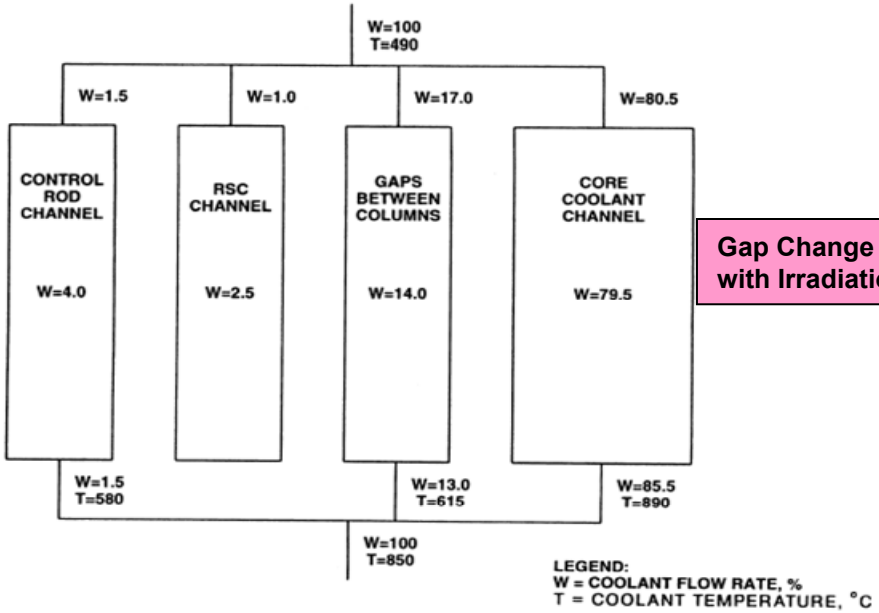

Gap Change with Irradiation

End of Cycle

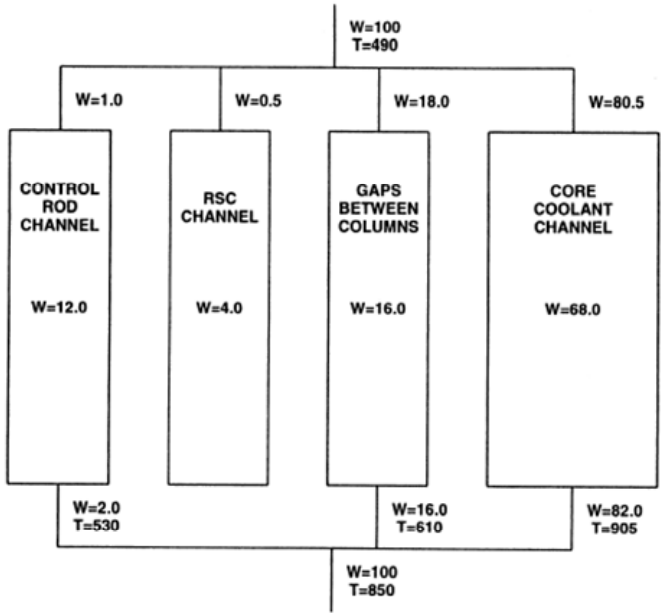

Outline

- Comparison with LWRs
- Reactor internals overview/flow paths
- Design approach and design requirements
- Inlet flow to upper plenum
- Flow through reactor core
- Outlet flow into lower plenum
- Design approach for operation with higher outlet temperatures (VHTR concepts)
- Summary

Outlet Flow into Lower Plenum

- **Flow geometry**
  - Flow transitions from coolant holes to flow distribution elements
  - Flow exits as jets around support posts into lower plenum
- **Flow phenomena**
  - Many turbulent jets entering normal into a free stream flow
  - A "forest" of posts
  - Complex 3-D mixing of jets
  - Individual jet temp. can be ± 200°C of avg. plenum temp.
  - Additional turbulent mixing in hot duct

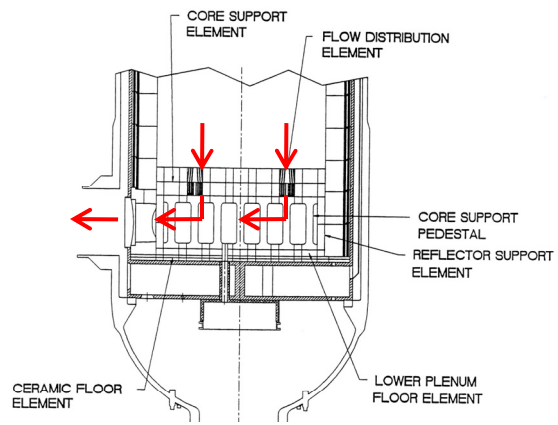

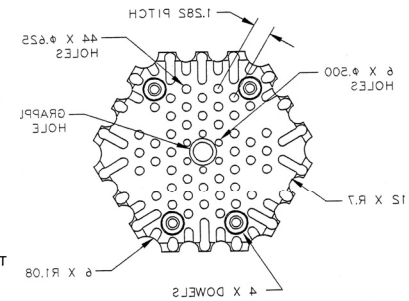

Flow Distribution Element

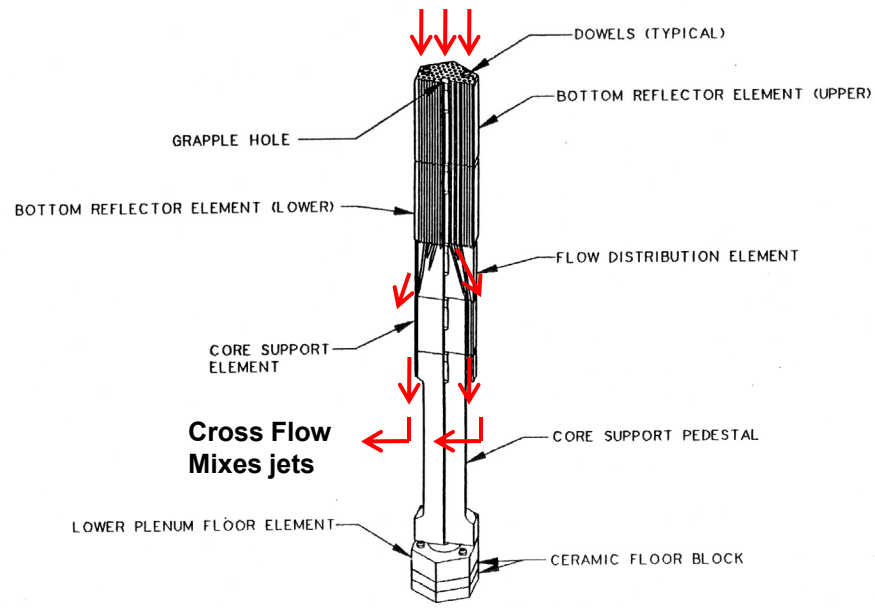

Cross Flow Mixes jets

Attenuation of Hot Streaks is an Important Design Consideration

- **Temperatures of the hot duct, SG, and IHX must be within acceptable limits, accounting for uncertainties**
- **Minimize hot streaks through design optimization**
  - Minimize column-to-column power peaking factors
- **Perform testing and CFD simulations to reduce uncertainties in estimating lower plenum mixing**
  - GA performed lower plenum testing in the 1970s and 1980s to develop semi-empirical mixing coefficients
    - Correlations have been modified for MHTGR
  - INL Mixed Index of Refraction (MIR) facility has been used to simulate lower plenum mixing
  - Preliminary CFD calculations of lower plenum mixing have been performed

MHTGR with SG

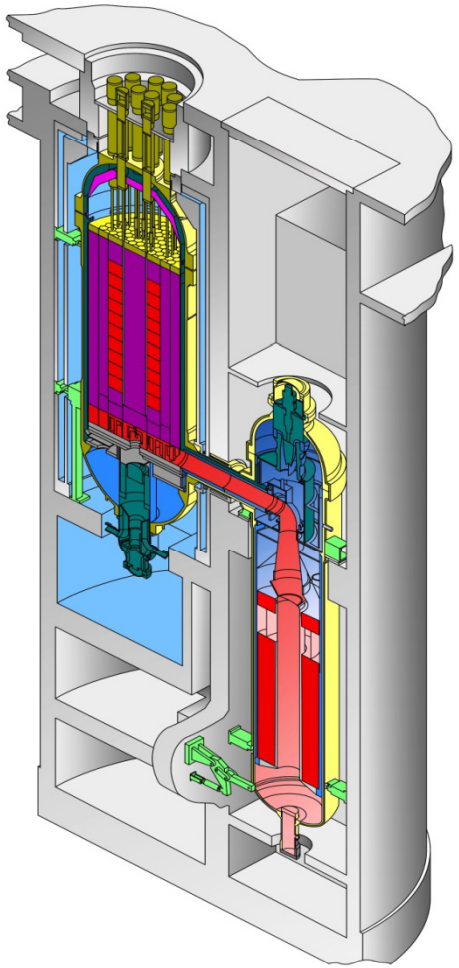

INL Mixed Index of Refraction Facility

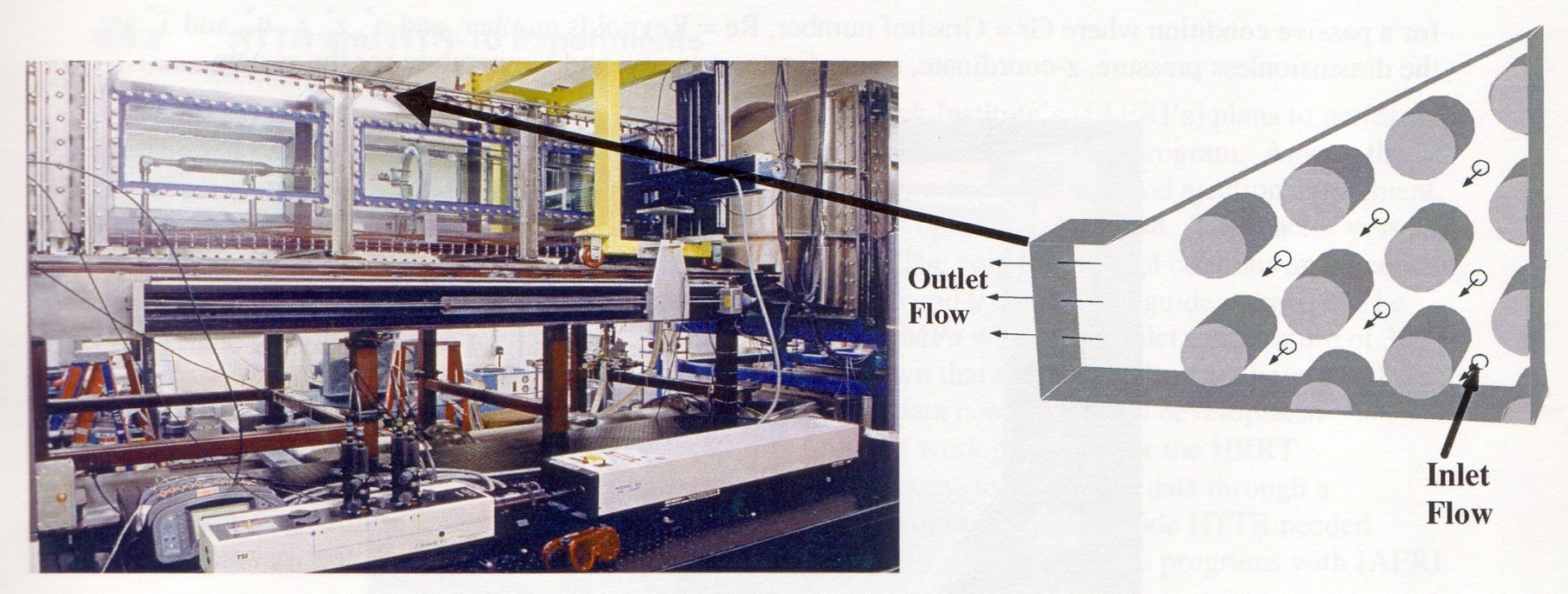

Preliminary CFD Calculations for GT-MHR Lower Plenum Mixing

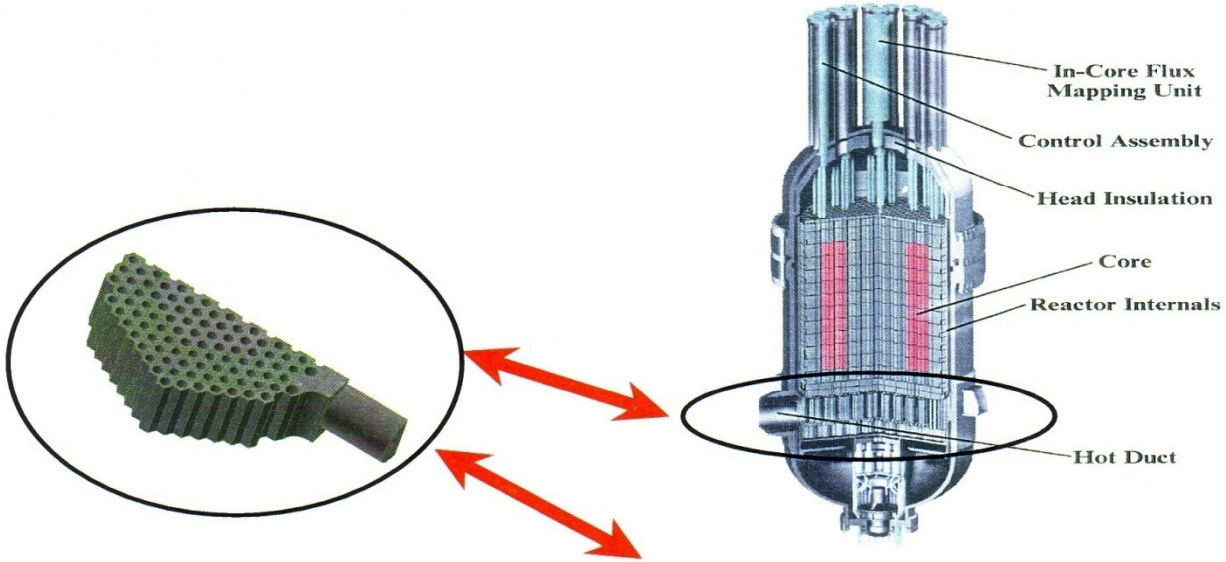

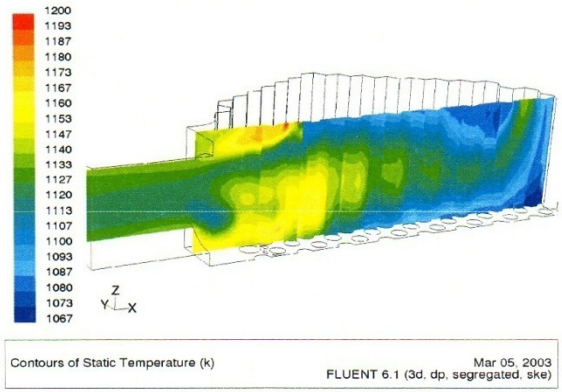

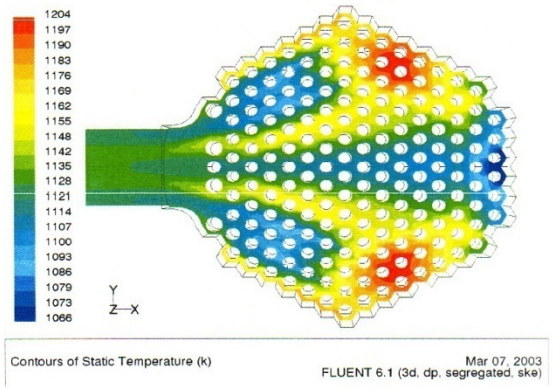

Outline

- Comparison with LWRs
- Reactor internals overview/flow paths
- Design approach and design requirements
- Inlet flow to upper plenum
- Flow through reactor core
- Outlet flow into lower plenum
- Design approach for operation with higher outlet temperatures (VHTR concepts)
- Summary

Design Approach for Operation with Higher Outlet Temperatures (VHTR Concepts)

Key Technical Challenges:

- **Fuel performance and fission product release**
  - Coated-particle performance
  - Diffusive release of noble metals (e.g., Ag-110m)
- **Selection of coolant inlet temperature**
  - Higher inlet temperatures may require development and qualification of higher-temperature steels for vessel
    - Or vessel cooling concepts can be designed
  - Lower inlet temperatures ⇒ higher core ΔT ⇒ lower coolant flow rate ⇒ lower Re/Nu numbers
- **Temperature limits for control rods and other reactor internal components**
  - Development and qualification of carbon-carbon composite materials

Design Approach for Higher Temperature Operation Addresses Technical Challenges

Design Goals:

1. **Maintain good core heat transfer (Time averaged peak fuel T < 1250°C)**
2. **Allow use of proven LWR vessel material (Vessel T < 350°C)**

- **Optimize Power Distributions**
  - Axial shuffling refueling schemes
  - Improved zoning of fuel and burnable poison
  - Control rod placement
- **Optimize Thermal Hydraulic Design**
  - Reduce bypass flow
    - Core restraint and sealing devices to minimize gaps
    - Reduce flow in control-rod channels using C-C rods
    - Goal is to reduce bypass flow fraction from about 0.2 to about 0.1
  - Alternative inlet flow configurations
    - Reduce vessel temperature
    - Route flow through outer reflector
  - Alternative block designs
    - Reduce temperature gradient between bulk coolant and fuel centerline

Impact of Coolant Inlet Temperature on Peak Fuel Temperature

$$Q = \dot{m}C_p\left(T_{out} - T_{in}\right) = \dot{m}C_p\Delta T = 600\ \text{MWt}$$

$$\dot{m} = \text{total coolant flow rate} = \frac{Q}{C_p\Delta T}$$

100°C decrease in inlet temperature causes 40°C increase in fuel temperature (results are for GT-MHR/VHTR conditions)

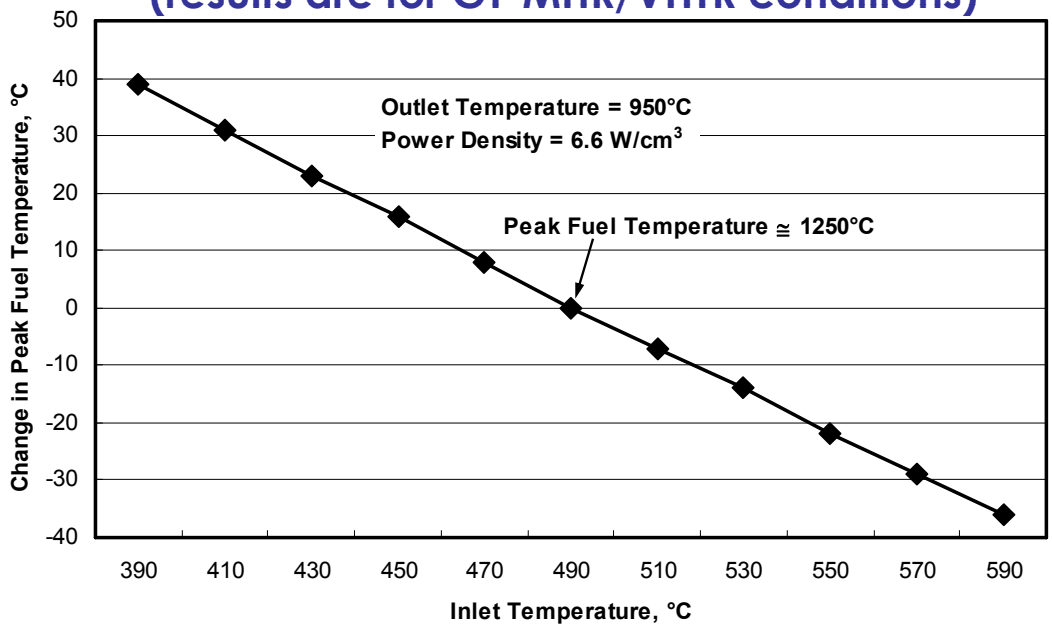

Bypass Flow Reduction Can Significantly Reduce Peak Fuel Temperatures

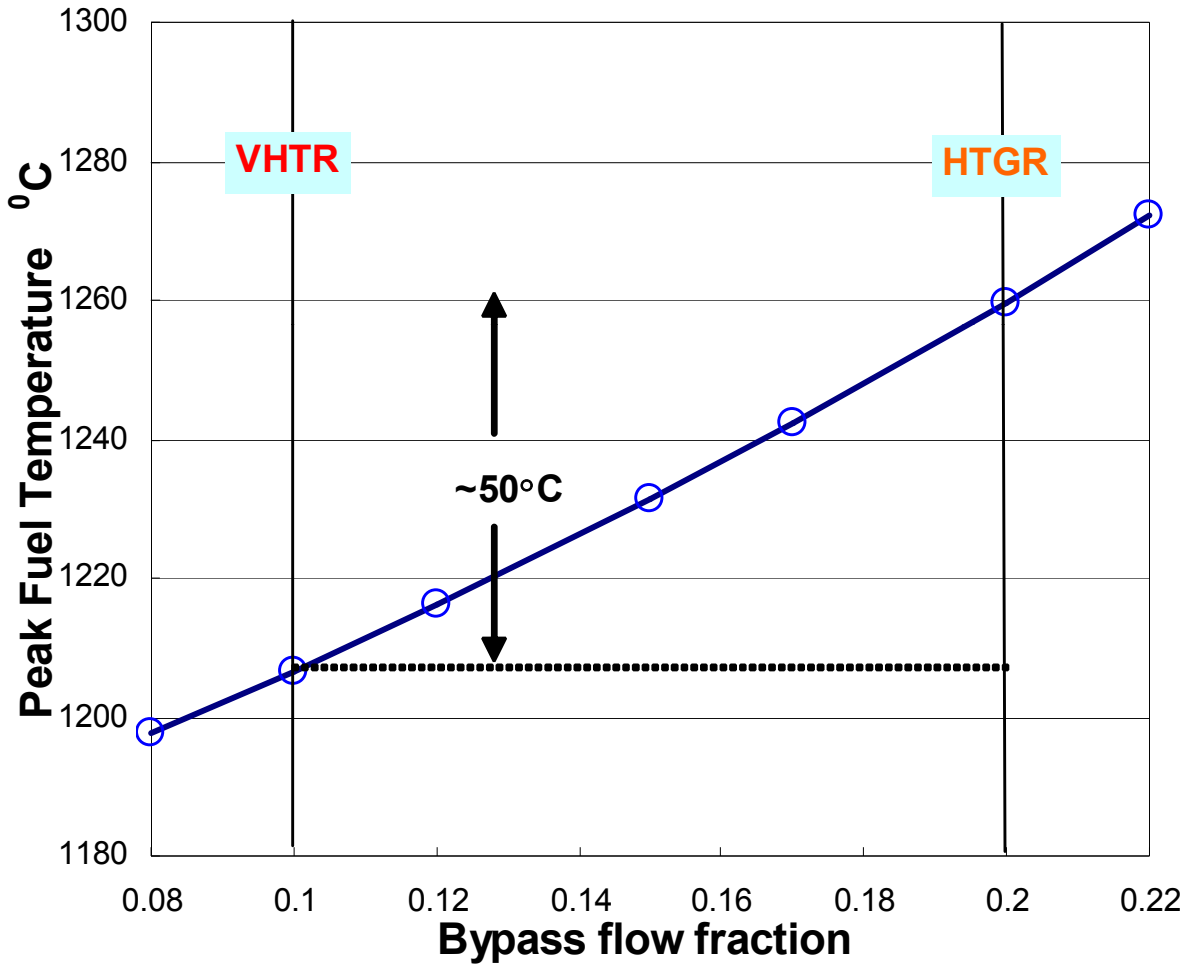

Graphite Fuel Block Can Be Optimized to Enhance Heat Transfer

Parameter	10-Row Block	12-Row Block
Number of fuel holes	210	300
Number of coolant holes	102	147
Fuel hole radius (cm)	0.635	0.5
Coolant hole radius (cm)	0.794	0.631
Minimum web thickness (cm)	0.451	0.451
Triangular pitch (cm)	1.88	1.58
Graphite/fuel volume ratio	3.15	3.72
Number of fuel compacts per fuel element	3126	4460
Compact fuel particle volume fraction	0.20	0.23
Block void fraction	0.185	0.167

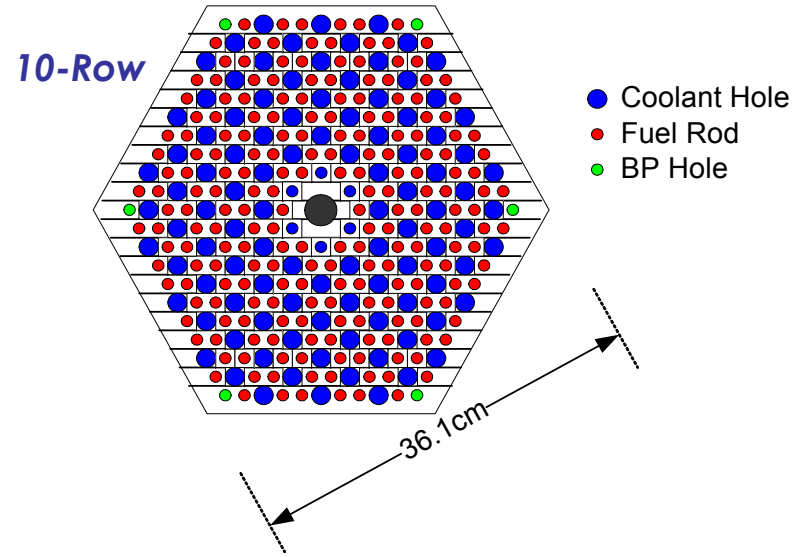

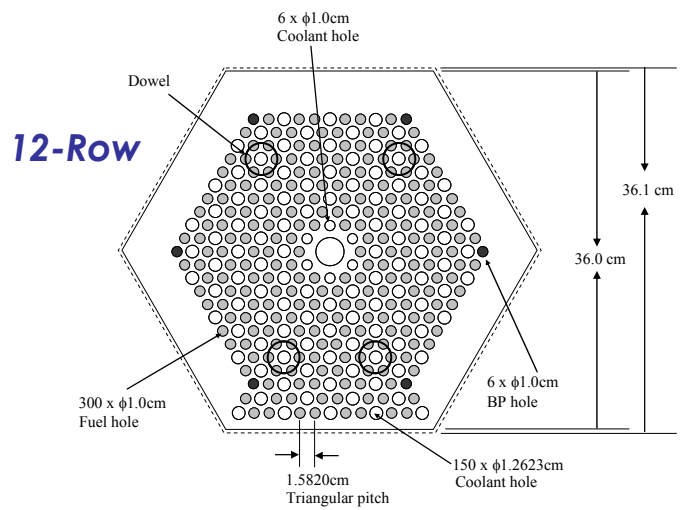

Thermal Analyses Show 12-Row Block Can Lower Peak Fuel Temperatures by ~40°C

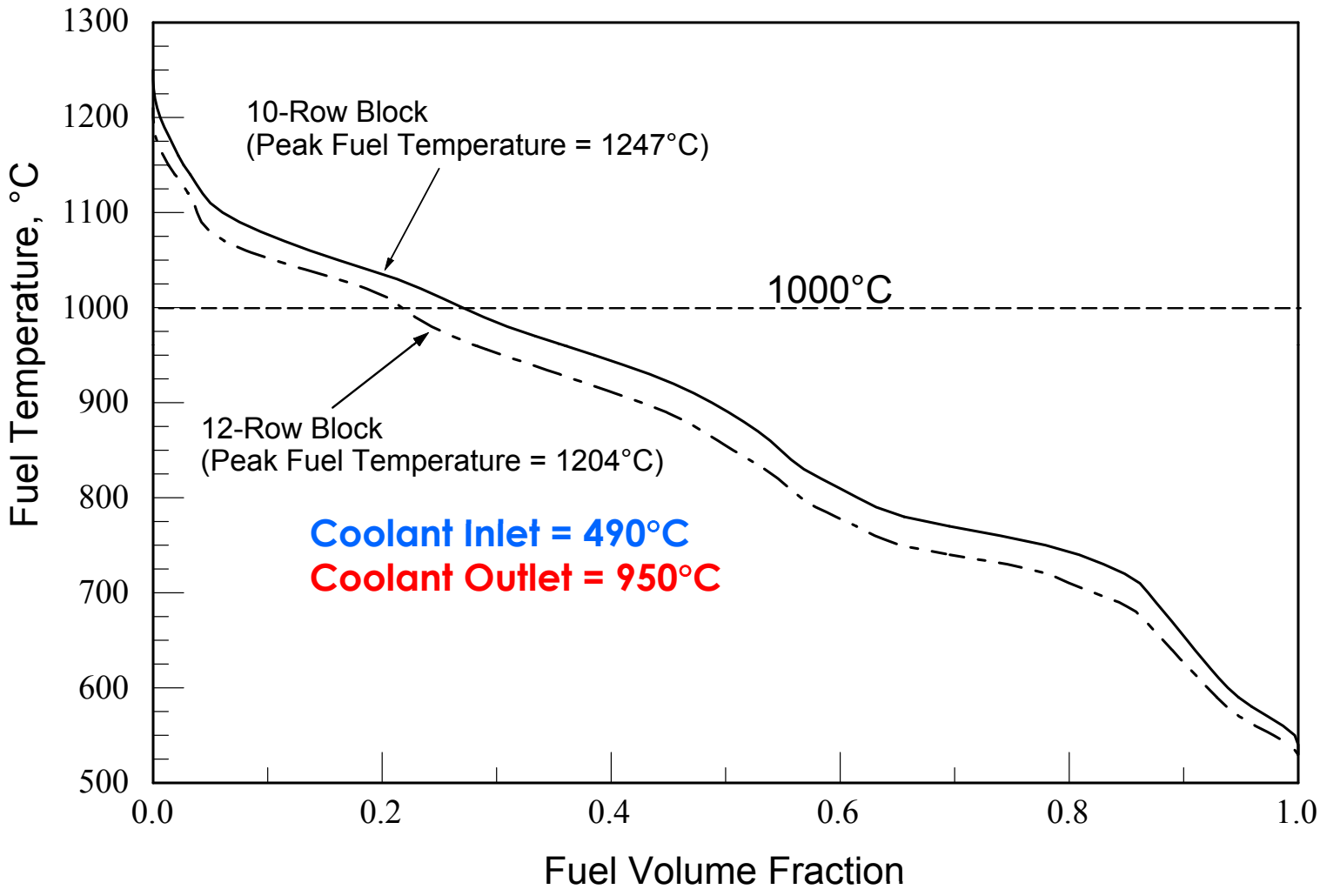

Outline

- Comparison with LWRs
- Reactor internals overview/flow paths
- Design approach and design requirements
- Inlet flow to upper plenum
- Flow through reactor core
- Outlet flow into lower plenum
- Design approach for operation with higher outlet temperatures (VHTR concepts)
- Summary

Summary

- **HTGR core thermal-fluid behavior is relatively straightforward**
  - Inert, single-phase helium coolant
  - Flow geometries and heat transfer / flow phenomena not overly complex
- **More advanced methods being utilized for NGNP conceptual design studies**
  - Bypass flow analyses
  - Lower plenum mixing

  } Improved network and/or CFD methods
- **Operation with higher coolant-outlet temperatures (900 - 950°C) should be feasible (VHTR concepts)**

Suggested Reading

- [Shenoy 1974] A.S. Shenoy and D.W. McEachern, "HTGR Core Thermal Design Methods and Analysis," GA-A12985 (GA-LTR-17), General Atomics, San Diego, CA, December 1974. (LTRs were licensing topical reports submitted to NRC for large HTGR designs.)
- [Melese 1984] G. Melese and R. Katz, Thermal and Flow Design of Helium-Cooled Reactors, American Nuclear Society, La Grange Park, IL, 1984.
- [Richards 2007] M. Richards, W.J. Lee, Y.H. Kim, N.I. Tak, and M. Reza, "Thermal Hydraulic Optimization of a VHTR Block-Type Core," Proceedings of the 15th International Conference on Nuclear Engineering (ICONE-15), Nagoya, Japan, April 22-26, 2007, Paper ICONE15-10290.