Environmental Effects on Crack Growth in Light Water Reactor Materials*

John Jackson, Mitch Meyer, Randy Lloyd, Todd Allen
Idaho National Laboratory

Ron Ballinger
MIT

NUC/IUC Symposium
May 21-22, 2008

* Based on presentation given at ICG-EAC meeting, Bastad, Sweden, April 2008

Goals

- Provide industry with capabilities for testing LWR materials in prototypic LWR environments including the effects of radiation
- To establish the INL as “the” place to go for LWR materials testing AND Science.
- To encourage collaboration between INL and universities in the LWR materials performance area.

ATR Background

- ATR has been designated a National Scientific User Facility (NSUF) whose mission is to:

  Provide nuclear energy researchers access to world-class facilities, thereby facilitating the advancement of nuclear science and technology

- LWR material degradation is a key issue for reliability- currently and in the future
- The number of facilities capable of testing irradiated material in prototypic LWR environments is small
- Capability for testing in LWR environments has been selected as a key INL development area
  - Industry relevant applied research
  - Scientific understanding of mechanisms

ATR NSUF Programs

- Industry Programs
  - ATR NSUF provides infrastructure for nuclear research and development
  - Engage industry using a cooperative R&D model (cost share)
    - Prioritize research with industry
    - Build specific capability, relying on industry experience
    - Execute programs jointly
  - Focus on mid- to long-term (5-20 year) needs
- University Programs
  - Sponsor university led 'non-proprietary' experiments through a peer-review selection process
  - First four irradiation experiments selected in March 2008
  - Focus on science
- Offer a unique forum for research collaboration among universities, industry, and national laboratories
- Offer a hub for collaboration with other test and research reactors and associated examination equipment

ATR Design and Operation Summary

Reactor Type
Pressurized, light-water moderated and cooled; beryllium reflector
Maximum rated power - 250 MW_t

Reactor Vessel
12 ft (3.65 m) diameter cylinder,
36 ft (10.67 m) high
stainless steel

Reactor Core
4 ft (1.22 m) (diameter and height)
40 fuel elements, high enriched U-235

Primary Coolant System
Operating T - 125°F inlet, 160ºF outlet
Design pressure - 390 psig
Maximum coolant flow rate - 49,000 gpm

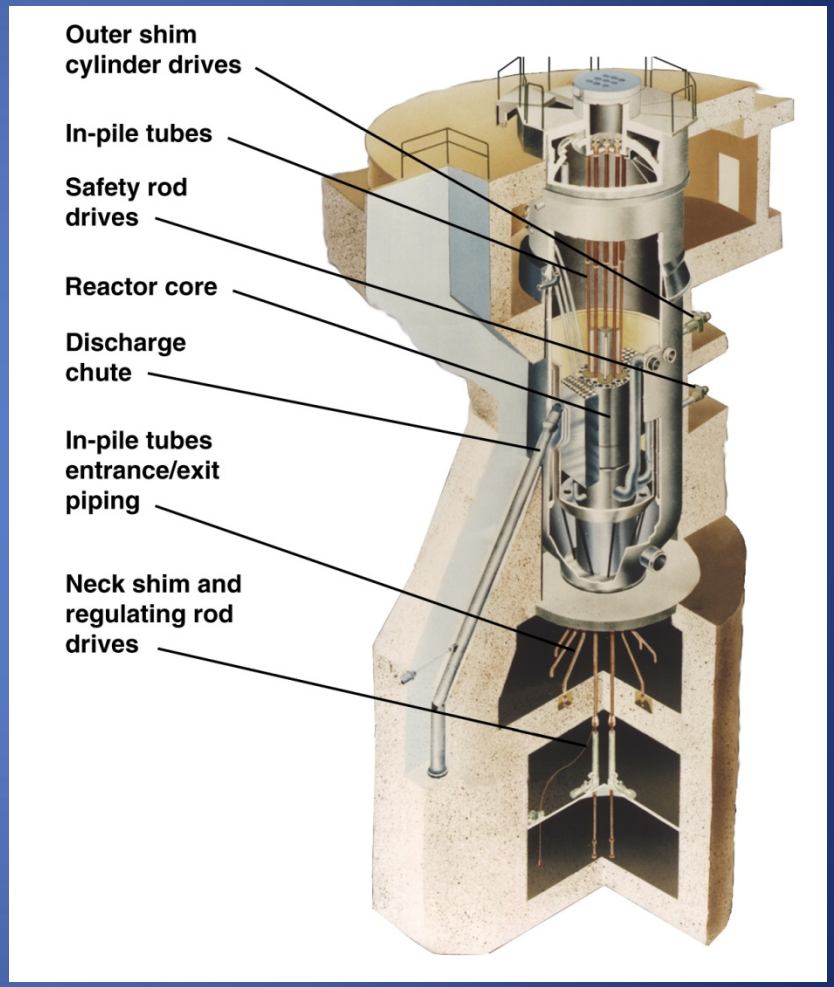

A Unique Reactor Core and Test Facility

- Peak Thermal Flux (Unperturbed @ 250MW): $1x10^{15}$n/cm^2-sec
- Symmetrical Axial Power (flux) Profile
- Power Tilt Capability among the Lobes of the Core
- Test Capabilities
  - Test size - up to 5.0” D and 48” L
  - 77 Irradiation Positions:
    - 4 Flux Traps
    - 5 In-pile Tubes
    - 68 Reflector Positions

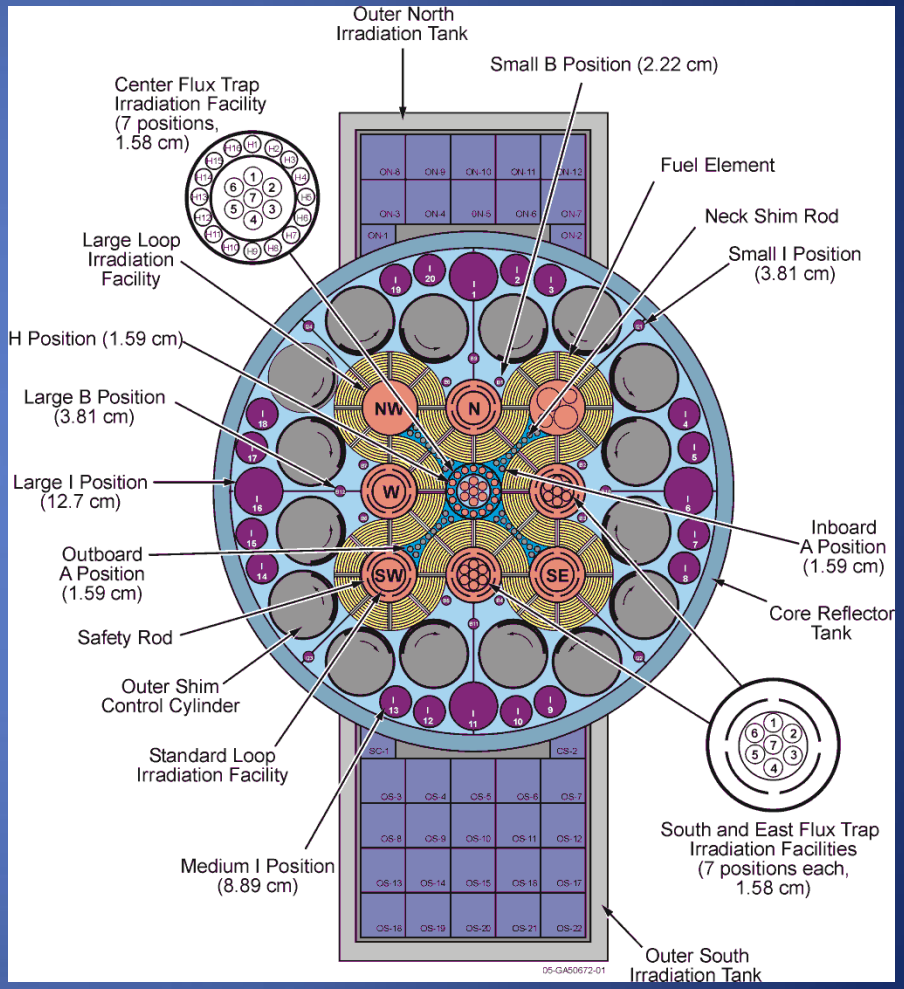

Positions	Diameter (in)	Thermal Flux* (n/cm^2-s)	Fast Flux* (E>1 MeV), (n/cm^2-s)	Typical Peak* γ Heating (W/g-graphite)
Northwest and Northeast Flux Traps	5.250	4.4×10^{14}	2.2×10^{14}	
Small Flux Traps	3.000	4.4×10^{14}	9.7×10^{13}	
A-Positions				
A1-A8	0.625	1.9×10^{14}	1.7×10^{14}	8.4
A9-A12	0.625	2.0×10^{14}	2.3×10^{14}	8.8
A13-A16	0.500	2.0×10^{14}	2.3×10^{14}	8.8
B-Positions				
B1-B8	0.875	2.5×10^{14}	8.1×10^{13}	6.4
B9-B12	1.500	1.1×10^{14}	1.6×10^{13}	5.5
H-Positions				
H1-H16	0.625	1.9×10^{14}	1.7×10^{14}	8.4
I-Positions				
Large (4)	5.000	1.7×10^{13}	1.3×10^{12}	0.66
Medium (16)	3.250	3.4×10^{13}	1.3×10^{12}	
Small (4)	1.500	8.3×10^{13}	3.1×10^{12}	

* @ 110 MW

Postirradiation Examination Capabilities

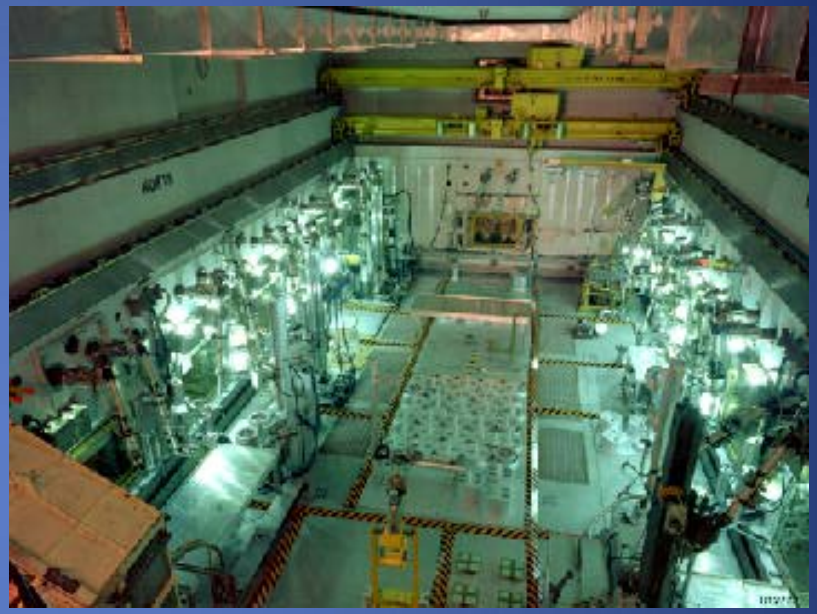

- The Hot Fuel Examination Facility (HFEF) is a large inert atmosphere hot cell designed for examination of irradiated fuel and material specimens
- Neutron radiography reactor (NRAD)
  - Full length radiography of commercial fuel (2.9 m, requires inversion)
- Element/capsule NDE
  - Visual examinations
  - Physical measurements
  - Eddy current oxide layer thickness
  - Gamma scanning
- Laser puncturing and gas sampling
- Metallography/microhardness
- Connected to MFC Analytical Laboratory hot cells via ‘rabbit’ system for hot quantitative chemical analysis
- Scanning electron microscopy, electron beam micro-chemical, and transmission electron microscopy analysis in EML (requires size reduction)

PIE Upgrades

Many additional PIE capabilities operational in 2009-2011

- Shielded EPMA (Electron Probe Micro Analyzer)
- Micro-XRD (X-Ray Diffraction)
- Dual Beam FIB (Focused Ion Beam)
- Scanning Thermal Diffusivity Measurement
- Tensile testing
  - Objective: mechanical testing of cladding material
- Sample preparation EDM (Electro-discharge machining)

Pressurized Water Loop Experiments

- Five flux trap positions currently have pressurized water in-pile loop tests
  - 1 large diameter (5 inch)
  - 4 small diameter (3 inch)
- Additional (6th) loop operational in summer 2010 (in center flux trap)
- Past operations - as many as nine loop tests
- Each loop has its own temperature, pressure, flow & chemistry control systems – can exceed current PWR operating conditions (2250 psig, 650F)
- Separated from ATR Primary Coolant System
- Structural materials, cladding, fuel
- Ramp/transient testing capabilities
- Feasible to simulate boiling water reactors (significant development required)
- Fuel failure allowed

LWR Materials Environmental Degradation Testing

Collaboration Partners

- GE Global Research
  - Overall system design, reference electrodes, V&V
- MIT-Uhlig Corrosion Laboratory
  - Overall system design, Software
  - Joint MIT/INL research program
- Studsvik
  - Shielded enclosure concept
  - Materials characterization equipment
- EPRI
  - Initial test program guidelines

System Schematic

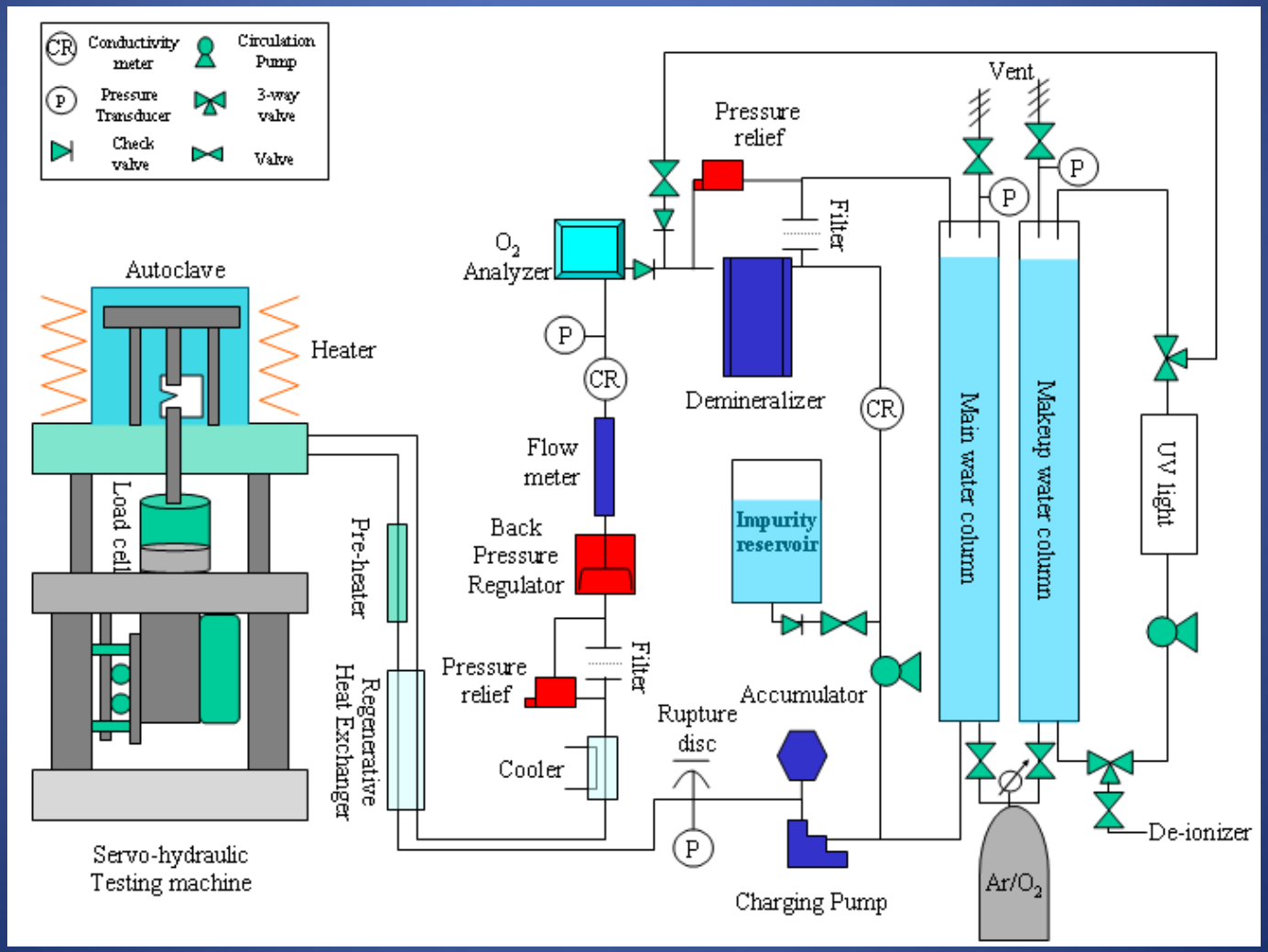

Roadmap to Facility for EAC Testing

- Build two “cold” systems identical to proposed “hot” systems for baseline testing and ease of issue resolution.
  - One servo-hydraulic 250 KN and one servo-electric 100 KN. Stainless steel or titanium autoclave.
- Build four systems with shielding similar to Studsvik
  - One servo-hydraulic 250 KN, three servo-electric 100 KN. Mixture of stainless steel and titanium autoclaves.

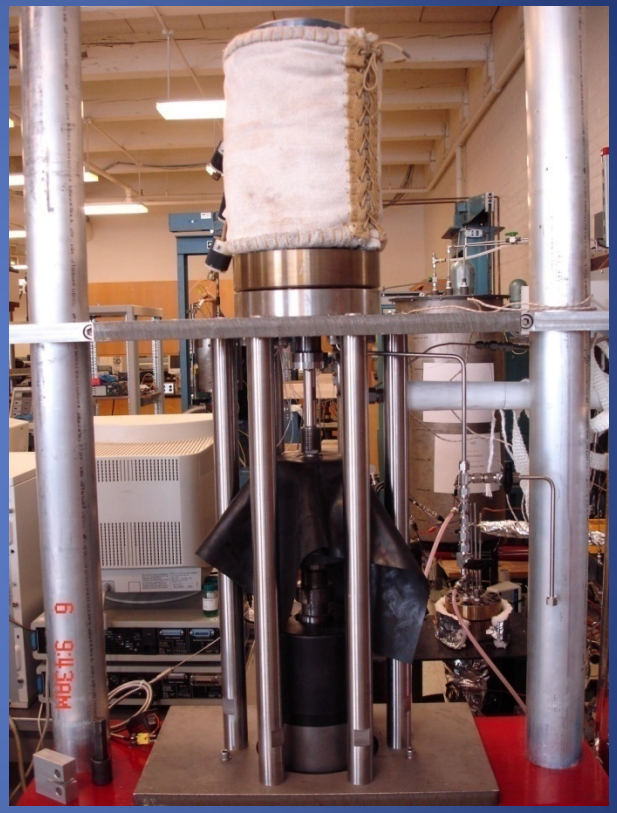

Capabilities

- Testing (fully automated)
  - Fatigue crack growth, constant ΔK
  - SCC Crack Growth,. Constant ΔK, dK/da
  - Fracture Toughness (J-R)
- Environments
  - BWR (288°C), PWR (up to 340°C)
  - Full chemistry control
  - Electrochemical potential measurement
- Crack Length Measurement-dc potential drop.

System Characteristics

- Instron based mechanical system
  - Capable of 1T specimen testing
    - da/dn, da/dt, J-R
  - 10 KIP or higher depending on ultimate load requirements
- Overall Setup Identical to GE/MIT facilities
  - Closed loop system for water chemistry control
- Software VB Based-Supplied by MIT
- Irradiated material systems based on Studsvik shielded enclosure concept
  - Shield only the autoclave
  - Other hardware outside shielded enclosure

Pressurized Water Loop Experiments

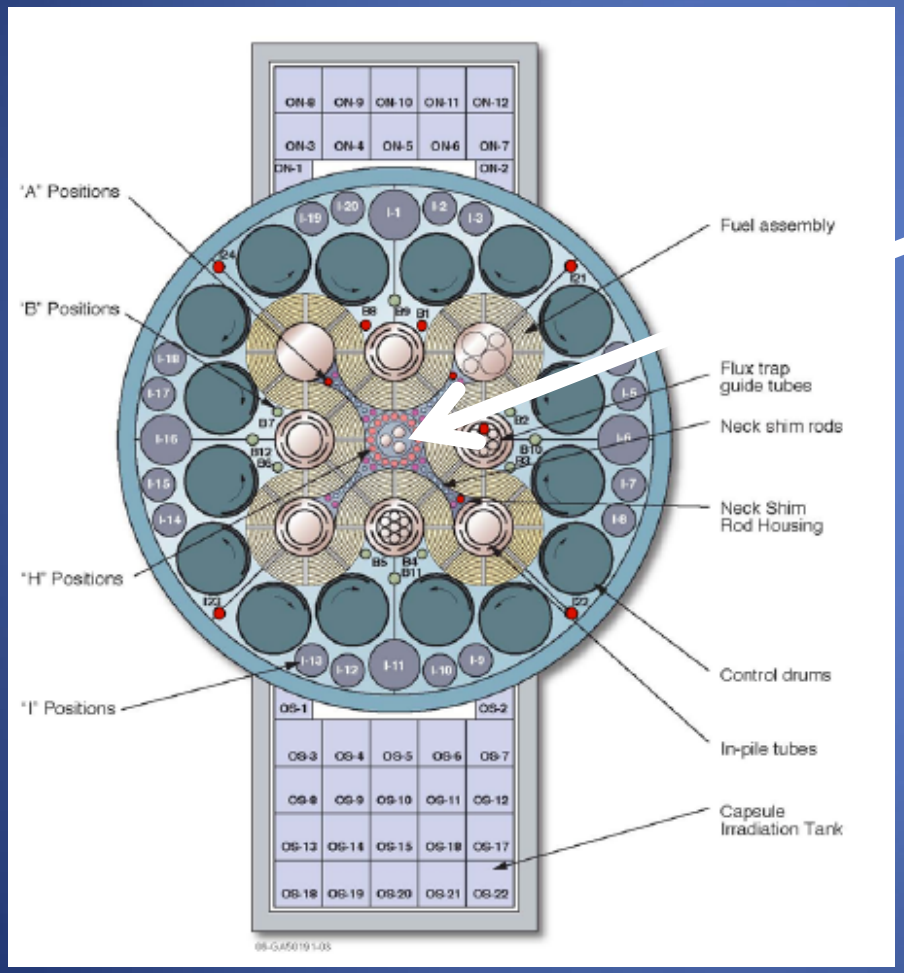

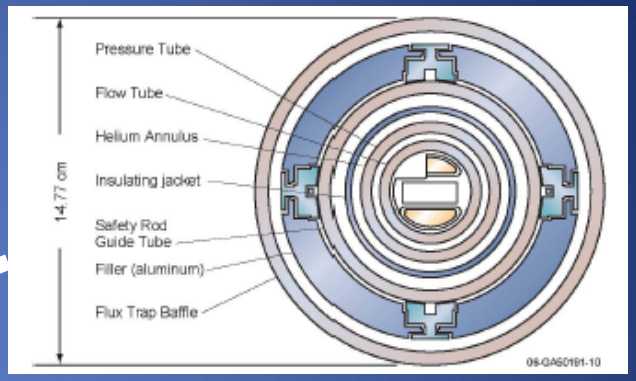

- Characteristics
  - Re-circulating Water
  - Full Chemistry Control
  - 1T Specimen Capable

Irradiated Material Testing

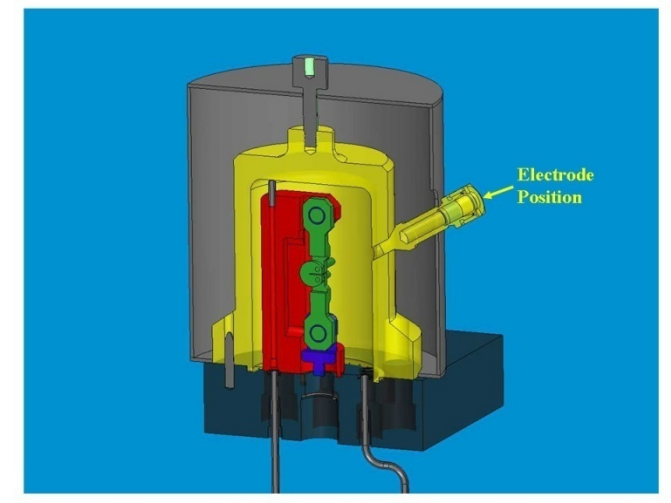

Current Status/Path Forward

- System configuration(s) defined
  - Major Components Being Ordered
- Fall 2008 - first 'cold' system operational
  - Built at INL with MIT/GE involvement
- Fall 2009 - first 'hot' system, second 'cold' system
  - Additional hot systems (four planned initially) to follow within two years
- Initial test 'pilot' program identified
  - X-750 "cold" SCC with MIT Ph.D. student
  - Joint INL/MIT Thesis supervision
- MIT/INL contract in place for R&D, System Construction, etc.

Initial Test Program

- Focus on high strength materials
  - X-750, potentially XM-19
  - BWR NWC and HWC
  - F (dose, microstructure)
  - Crack growth, J-R
- MIT/INL cooperation involving student research-example of desired partnerships to be developed through the ATR NSUF
  - Using cold facilities @ MIT initially but transitioning to INL facilities as they come on line

Path Forward

- Begin crack growth rate testing of irradiated materials in 2010
  - Material from ATR or other sources
  - Summer 2010, 6th ATR water loop on line
  - V&V of Facility (Verification Committee, MIT, GE, PNNL, EPRI)
- Next KEY Technical Opportunity
  - ICG-EAC Meeting will be in the US in April 2009
  - Entire World's LWR Env. Deg. Community Present
  - IMPORTANT that we have operating systems and are getting high quality data.