DOE–HTGR–90406
Revision 0

CAUTION

Do not publicly release this document.

This technical report is being transmitted in advance of DOE patent clearance and no further dissemination or publication shall be made of the report without prior approval of the DOE Patent Counsel.

This document will be returned upon request or when no longer needed, unless notification has been received that this document has been cleared for release or publication.

Patent Cleared 3-28-94

MHTGR NUCLEAR PHYSICS BENCHMARKS

Issued By:
General Atomics
P.O. Box 85608
San Diego, California 92186-9784

DOE CONTRACT DE–AC03–89SF17885

GA Project 6300

FEBRUARY 1994

MASTER

DISTRIBUTION OF THIS DOCUMENT IS UNLIMITED

DISCLAIMER

This report was prepared as an account of work sponsored by an agency of the United States Government. Neither the United States Government nor any agency thereof, nor any of their employees, make any warranty, express or implied, or assumes any legal liability or responsibility for the accuracy, completeness, or usefulness of any information, apparatus, product, or process disclosed, or represents that its use would not infringe privately owned rights. Reference herein to any specific commercial product, process, or service by trade name, trademark, manufacturer, or otherwise does not necessarily constitute or imply its endorsement, recommendation, or favoring by the United States Government or any agency thereof. The views and opinions of authors expressed herein do not necessarily state or reflect those of the United States Government or any agency thereof.

DISCLAIMER

Portions of this document may be illegible in electronic image products. Images are produced from the best available original document.

GENERAL ATOMICS

A 1485 (REV. 9/89)

ISSUE/RELEASE SUMMARY

☐ R&D ☒ DV&S ☐ DESIGN	APPVL LEVEL	DISC.	QA LEVEL	SAFETY	SYS	DOC. TYPE	PROJECT	DOCUMENT NO.	REV
	3	N	n/a	n/a	11	SPE	6300	DOE-HTGR-90406	0
			SEISMIC n/a	ELECTRICAL n/a					

TITLE:

MHTGR Nuclear Physics Benchmarks

CM APPROVAL/ DATE	REV	PREPARED BY	APPROVAL(S) ENGINEERING	QA	PROJECT	REVISION DESCRIPTION/ W.O. NO.
INFO 2 FEB 28 1994	0	R.Sherman R. Sherman 2-23-94 R.A.Rucker R.A. Rucker 2-23-94	A.M.Baxter A. Baxter 2-23-94		F.S. Ople F.S. Ople 2/23/94	WO#7614014003 M/S C1400.5.03 WBS 1400.5 (ROLL 2268)

CONTINUE ON GA FORM 1485-1

* See list of effective pages

NEXT INDENTURED DOCUMENT(S)

DOE-HTGR-90237

☐ GA PROPRIETARY INFORMATION

THIS DOCUMENT IS THE PROPERTY OF GENERAL ATOMICS. ANY TRANSMITTAL OF THIS DOCUMENT OUTSIDE GA WILL BE IN CONFIDENCE. EXCEPT WITH THE WRITTEN CONSENT OF GA, (1) THIS DOCUMENT MAY NOT BE COPIED IN WHOLE OR IN PART AND WILL BE RETURNED UPON REQUEST OR WHEN NO LONGER NEEDED BY RECIPIENT AND (2) INFORMATION CONTAINED HEREIN MAY NOT BE COMMUNICATED TO OTHERS AND MAY BE USED BY RECIPIENT ONLY FOR THE PURPOSE FOR WHICH IT WAS TRANSMITTED.

☒ NO GA PROPRIETARY INFORMATION

LIST OF EFFECTIVE PAGES

Page Number	Page Count	Revision
i through viii	8	0
1-1 through 1-4	4	0
2-1 through 2-11	11	0
3-1 through 3-32	32	0
Total pages	55	

ABSTRACT

This report defines a series of core physics calculational benchmark problems for the Modular High Temperature Gas-Cooled Reactor (MHTGR). These benchmark problems are specified for a realistic MHTGR core to facilitate comparison of calculational results from different computational methods to be performed by various participating organizations. These analytical comparisons will be used to confirm the accuracy of the computational methods used for MHTGR physics analysis, as part of the code validation process. These analytical benchmark problems are specified based on an annular core containing 84 columns with a high L/D ratio, and include the dimensions, temperatures, and nuclide atom densities for a series of core models of increasing complexity, including 1-D radial, 1-D axial, 2-D radial hexagonal (1 hex per element), 2-D radial subhex (7 hexes per element), 3-D hexagonal, and 3-D subhex models. A time point at the beginning of the initial cycle is used for these benchmark problems to simplify the calculations. The nuclear analyst must use the data provided to create appropriate multigroup diffusion cross sections, accounting for the heterogeneity in the fuel particles and rods, along with the fixed burnable poison (FBP) and control rods. Benchmark cases to be analyzed include the hot (100% power) and cold (300 K) reactor with and without moisture ingress, for all-rods-out and all-rods-in configurations. Power distributions and core K-eff values are to be calculated for each case, while total rod worth, moisture ingress worth, and cold-to-hot temperature defect are derived from case-to-case differences in core reactivity. Conclusions regarding the MHTGR computational methods that are based on these MHTGR benchmark problems should also apply to other core sizes and power levels because the basic geometries and materials will remain the same.

CONTENTS

ABSTRACT iv

LIST OF TABLES vi

LIST OF FIGURES vii

LIST OF ABBREVIATIONS AND ACRONYMS viii

1. INTRODUCTION AND SUMMARY 1-1

2. CORE DESIGN DESCRIPTION 2-1
   - 2.1 Core Configuration 2-1
   - 2.2 Fuel Element Design 2-1
   - 2.3 Fuel Design 2-5
   - 2.4 Reflector Element Design 2-5
   - 2.5 Control Material 2-10

3. MHTGR BENCHMARK PROBLEMS 3-1
   - 3.1 Benchmark Calculations to be Performed 3-1
   - 3.2 Calculation of Cross Sections 3-3
     - 3.2.1 Core Cross Sections 3-3
     - 3.2.2 Reflector Cross Sections 3-7
     - 3.2.3 Shielded FBP Cross Sections 3-7
     - 3.2.4 Shielded Control Rod Cross Sections 3-9
   - 3.3 Specification of Models for Benchmark Calculations 3-9
     - 3.3.1 1-D Radial Model 3-11
     - 3.3.2 1-D Axial Model 3-14
     - 3.3.3 2-D Hexagonal Model 3-14
     - 3.3.4 2-D Subhex Model 3-23
     - 3.3.5 3-D Hexagonal Model 3-30
     - 3.3.6 3-D Subhex Model 3-32

LIST OF TABLES

TABLE	TITLE	PAGE
2-1	Design Parameters for MHTGR Benchmarks	2-4
2-2	Element and Core Volumes	2-8
3-1	MHTGR Benchmark Calculations to be Performed	3-2
3-2	Data for the Calculation of Dry Core Cross Sections	3-5
3-3	Data for Calculation of Reflector Cross Sections	3-8
3-4	Data for 1-D FBP Cell Calculation	3-8
3-5	Data for 1-D Control Rod Cell Calculation	3-10
3-6	Data for a 1-D Radial Benchmark	3-13
3-7	Atom Densities for 1-D Axial Benchmark	3-16
3-8	Temperatures for 1-D Axial Benchmark	3-17
3-9	Atom Densities for 2-D Hexagonal Benchmark	3-20
3-10	Temperatures and Control Rods for 2-D Hexagonal Benchmark	3-22
3-11	Core Atom Density Types for 2-D Subhex Benchmark	3-26
3-12	Core Atom Densities for 2-D Subhex Benchmark	3-27
3-13	Reflector Atom Densities for 2-D Subhex Benchmark	3-28
3-14	Temperatures and Control Rods for 2-D Subhex Benchmark	3-29
3-15	Axial Zoning Factors and Control Rods for 3-D Hexagonal Benchmark	3-31

LIST OF FIGURES

FIGURE	TITLE	PAGE
2-1	Reactor Elevation View	2-2
2-2	MHTGR Core Arrangement	2-3
2-3	Standard Fuel Element	2-6
2-4	Control or Reserve Shutdown Fuel Element	2-7
2-5	Fuel Element Components	2-9
2-6	Reflector Control Element	2-11
3-1	120° Model of the 84 Column Core	3-4
3-2	Model For 1-D Radial Benchmark Calculations	3-12
3-3	Model for 1-D Axial Benchmark Calculations	3-15
3-4	Element Locations for Hexagonal Benchmarks	3-18
3-5	Element Types for Hexagonal Benchmarks	3-19
3-6	Subhex Geometry Used to Model an Element	3-24
3-7	Geometry for Subhex Benchmarks	3-25

LIST OF ABBREVIATIONS AND ACRONYMS

BOIC	Beginning of Initial Cycle
FBP	Fixed Burnable Poison
LEU	Low Enriched Uranium (<20% U-235)
MHTGR	Modular High Temperature Gas-Cooled Reactor
NU	Natural Uranium
RSC	Reserve Shutdown Control
V&V	Verification and Validation

1. INTRODUCTION AND SUMMARY

The nuclear physics design of the core of the Modular High Temperature Gas-Cooled Reactor (MHTGR) requires the use of verified and validated computational methods for the calculation of core physics parameters. To complete the verification and validation (V&V) of the MHTGR computational methods, it must be proven that the computational methods calculate certain physics parameters within acceptable uncertainty criteria. The physics parameters, and their uncertainty criteria (two sigma standard deviation) that is required to be satisfied for V&V, addressed by the proposed benchmark problems are as follows: temperature defect (±20%), control rod worth (±20%), power distribution (±15%), K-eff (±1.5%), and water ingress (±25%). One method planned to be used for V&V of the MHTGR computational methods is to use the computational methods to calculate results of physics experiments performed in facilities that are as similar as possible to the MHTGR. To supplement this approach, and to enhance the confidence level regarding the accuracy of the MHTGR core physics computational methods, a series of core physics benchmark problems for the MHTGR are specified in this document. These benchmark problems are specified for a realistic MHTGR core to facilitate comparison of calculational results from different computational methods (diffusion theory, transport theory, Monte Carlo) to be performed by various participating organizations. These analytical comparisons will be used to confirm the accuracy of the computational methods used for MHTGR physics analysis, as part of the code validation process. Calculational comparisons include temperature defect, control rod worth, power distribution, K-eff, and water ingress. Other physics data required for V&V of MHTGR computational methods (fuel burnup, decay heat, and reactor transients) are not currently included in this set of benchmark problems.

These analytical benchmark problems are specified based on a reference design 450 MW(t) MHTGR, with an annular core containing 84 columns, at the beginning of the initial cycle (BOIC). The active core is an annulus of three rows of fuel elements with 10 fuel elements / column, surrounded by inner (central) and outer radial reflectors, and axial reflectors above and below the core. The annular core contains 12 control rods and 12 reserve shutdown control (RSC) holes, and the outer reflector contains 24 control rods. The fuel is composed of 19.8% low enriched uranium (LEU) fissile particles and natural uranium (NU) fertile particles. This configuration for the MHTGR benchmark problems is representative of recent design iterations for the MHTGR.

Section 2 provides a description of the core components which must be accounted for in realistic MHTGR core physics calculations. The information in this section provides the basis for the values provided in Section 3 for the benchmark problems. Section 2 also provides the data needed to create more detailed representations of the MHTGR benchmark problems than is provided in Section 3, such as with Monte Carlo methods using general combinatorial geometry.

Section 3 defines the analytical benchmark problems for a series of MHTGR core models of increasing complexity, including a 1-D radial benchmark, a 1-D axial benchmark, a 2-D hexagonal (1 hex/element) benchmark, a 2-D subhex (7 hexes/element) benchmark, a 3-D hexagonal benchmark, and a 3-D subhex benchmark. Dimensions, temperatures, and initial cycle atom densities are provided for all core locations in each of the benchmark problem models. The benchmark problems defined for all models include the hot (100% power) and cold (300 K) reactor for the all-rods-out condition, with and without moisture ingress. The 2-D and 3-D benchmark problems also include all-rods-in cases analogous to the above all-rods-out problems. The power distribution and K-effective value are to be calculated for as many benchmark problems as possible. Case-to-case comparisons yield the cold-to-hot temperature defects, moisture ingress reactivity worths, and total control rod worths. Additional K-eff data can come from the 0-D cross section calculation. Although an R-Z MHTGR model is not explicitly described, the nuclear analyst can construct an R-Z model if necessary from the 1-D radial and 1-D axial models.

The nuclear analyst must use the data provided in Sections 2 and 3 for his calculation of the MHTGR benchmark problems. The analyst's work will include choosing an appropriate multi-group neutron energy structure, and calculating multi-group cross sections which account for the heterogeneous structure of the core that has been homogenized in each of the benchmark models. Of primary concern is properly accounting for the grain and rod structure of the fuel, and the fixed burnable poison (FBP) and control rod strong absorber regions. Section 3.2 provides more detailed input data for constructing transport cell models of the FBP and control rods. Transverse leakages for the 1-D and 2-D radial models can be accounted for based upon the direct leakage results of the 1-D axial model. Conversely, the axial 1-D model can use the radial leakages from one of the various radial benchmark models to account for its transverse leakage. 3-D model results may also be used to account for 1-D and 2-D model transverse leakage.

Assumptions are made in the specification of the MHTGR benchmark problems relative to the actual core so that the benchmarks can be specified precisely without excessive detail, and to simplify the benchmarks so that they are relatively easy and straight-forward to calculate. This

should help to minimize errors in the calculation of the benchmarks, and should allow their calculation using existing computational methods within reasonable limits of time and funding. The impact of these assumptions on the calculated results should be small, so that the calculational differences obtained for the benchmark calculations should be usable for V&V of the MHTGR computational methods. The assumptions are listed below so that they can be considered further if necessary :

1. The average of five fixed burnable pins in the corners of the core element are modeled as seven FBP pins in each block, with one FBP pin in the center of each subhex. The FBP pins are therefore reduced in diameter to maintain the correct FBP volume fraction.

2. The regions of the radial and axial reflectors that are beyond the inside edge of the borated steel pins in the reflectors are ignored. The zero flux boundary condition ignores neutrons returning from these regions.

3. By homogenization of the graphite in the core and reflector blocks, neutron streaming in the gaps, coolant holes, and control holes is ignored.

4. Element bowing due to temperature gradients is ignored.

5. Uniform temperatures in the various regions are assumed, which ignores the details of the actual temperature distributions. For example, the fuel particles, fuel rod, and the block graphite are assumed to be at the same temperature, whereas in reality the fuel particles are at a higher temperature than the fuel rods, and the fuel rods are at a higher temperature than the block graphite. Also, in reality the temperatures in the core increase from the top of the core to the bottom of the core, because the coolant moves through the core from the top to the bottom.

6. Axial dimensions in the element are simplified: the length of the fuel rods and the fixed burnable poison rods are assumed to be identical to the height of the block, and the axial details of the control rods are ignored and replaced with a simple cross-sectional model across the B_4C compact in the control rod.

7. In the suggested methodology for calculating the core cross sections, it is assumed that the particles and the fuel rods can be effectively homogenized into the block graphite by using homogenized core cross sections, it is assumed that the particle coatings can be homogenized

into the fuel rod matrix, it is assumed that the cross sections need not be position or temperature dependent, and it may be assumed that core leakage can be ignored in the calculation of the fine group spectrum used to collapse down to the broad group cross sections.

8. It is assumed that the reflector cross sections can be independent of position, and calculated for constant temperatures.

9. It is assumed that all uncertainties and variations in masses, dimensions, and temperatures can be ignored.

10. It is assumed that impurities can be simulated by homogenized B-10.

The benchmark models, with the simplifying assumptions stated above, are very similar to the models that are routinely used at General Atomics for MHTGR core design. Conclusions regarding the MHTGR computational methods that are based on these reference 450 MW(t) 84 column MHTGR benchmark problems should also apply to other core sizes and power levels because the basic geometries and materials will remain the same.

This document is safety related, since it relates to V&V of core physics codes that are used to calculate safety related physics parameters, such as K-eff, power distributions, control rod worths, temperature defects, and reactivity effects of water ingress.

2. CORE DESIGN DESCRIPTION

Described below is the design for the core, elements, compacts, particles, fixed burnable poison (FBP), and reflectors used in the nuclear physics benchmark calculations specified in section 3.0. These benchmark calculations are specified based on a reference MHTGR design with 84 columns and a power level of 450 MW(t).

2.1 CORE CONFIGURATION

The reactor core consists of hexagonal graphite fuel and reflector elements, plenum elements, and reactivity control material, all located inside a reactor pressure vessel. A core elevation view is shown in Fig. 2-1 and a plan view is shown in Fig. 2-2. The left side of Fig. 2-1 is a cut from the center of the core through the corners of the elements. The right side of Fig. 2-1 is a cut from the center of the core through the flats of the elements.

The active core consists of hexagonal graphite fuel elements containing blind holes for fuel compacts and full length channels for helium coolant flow. The fuel elements are stacked to form columns (10 fuel elements per column) that rest on support structures as shown in Fig. 2-1. The active core columns form a three row annulus, with columns of hexagonal graphite elements in the inner and outer reflector regions (see Fig. 2-2). Twelve core columns and 24 outer reflector columns contain channels for control rods. Twelve columns in the core also contain channels for reserve shutdown control (RSC) material. Axially above and below the fueled core elements are the replaceable axial reflector elements. Radially outside of the outer replaceable reflector elements are the permanent reflector blocks.

Basic core nuclear design parameters are summarized in Table 2-1.

2.2 FUEL ELEMENT DESIGN

There are three types of elements that contain fuel: standard elements, reserve shutdown elements that contain a channel for reserve shutdown control, and control elements that contain a control rod channel. The principal structural material of the fuel elements is graphite in the form of a right hexagonal prism 793.0 mm (31.22 in.) high and 361.0 mm (14.212 in.) across the flats,

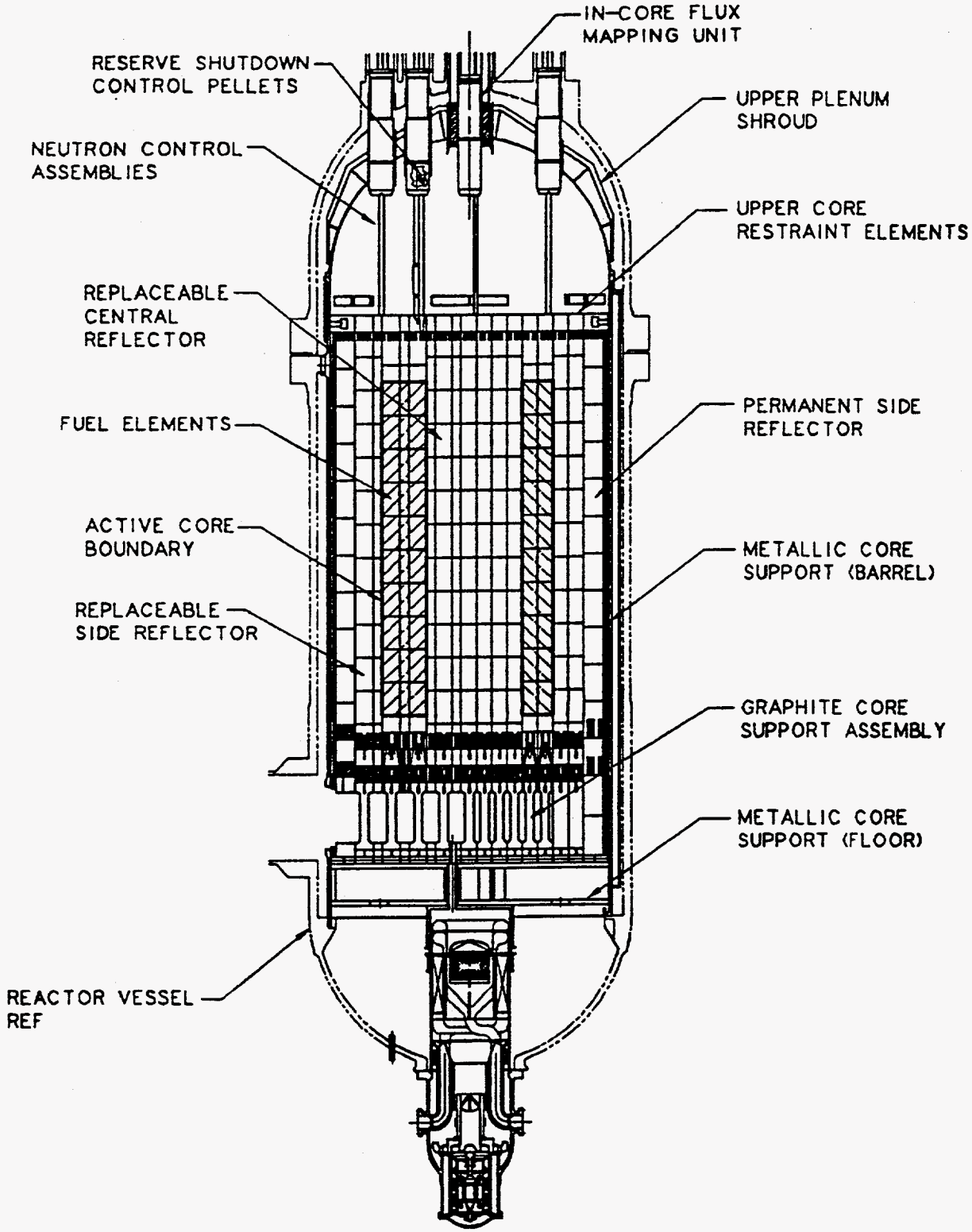

FIGURE 2-1 REACTOR ELEVATION VIEW

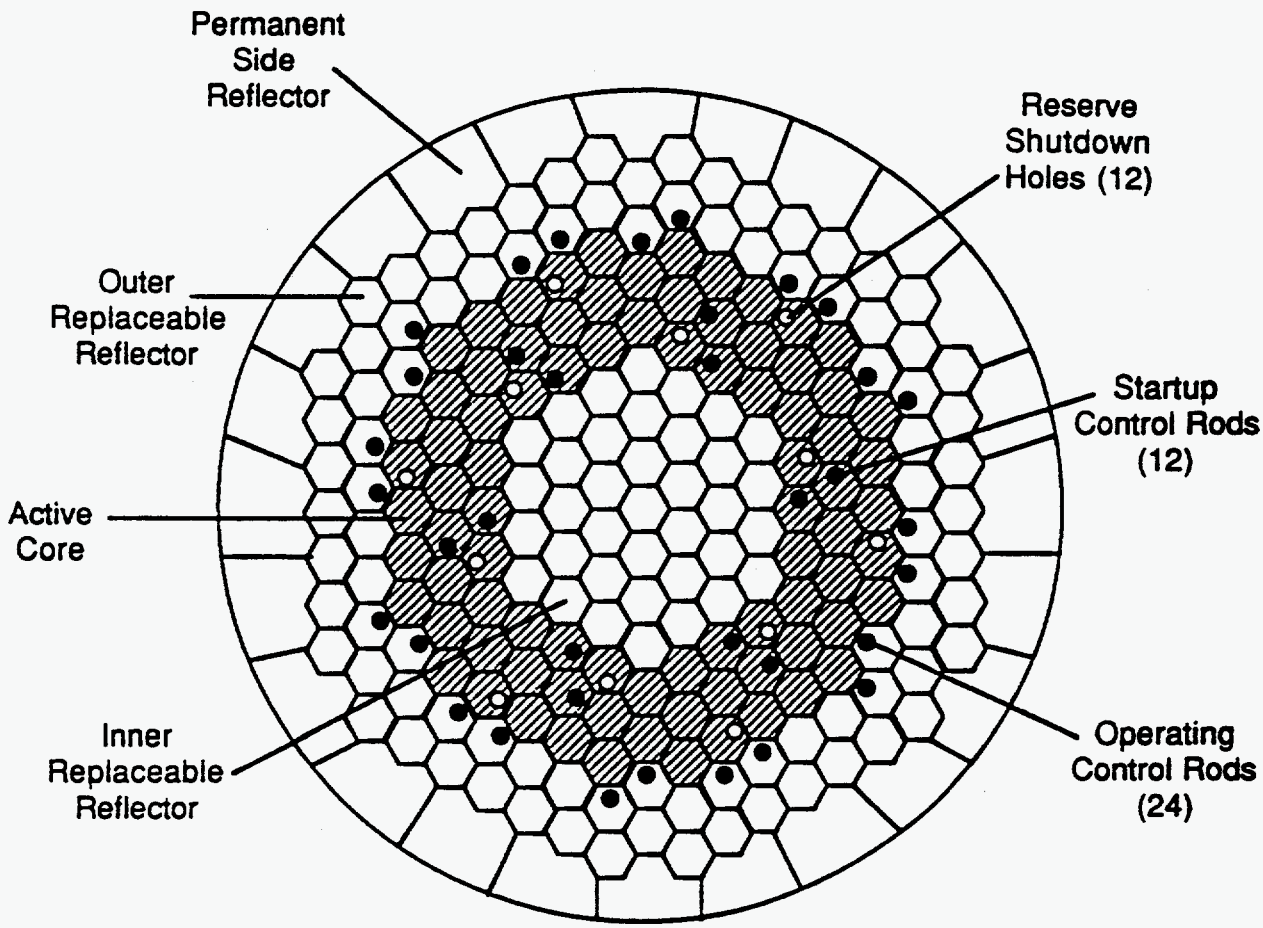

FIGURE 2-2 MHTGR CORE ARRANGEMENT

TABLE 2-1

DESIGN PARAMETERS FOR MHTGR BENCHMARKS

Core Power, MW(t)	450
Core Columns	84
Number of Fuel Elements (10/column)	
Standard	600
Control	120
Reserve shutdown	120
Number of Control Rods	
Inner reflector	0
In-core	12
Outer reflector	24
Number of Reserve Shutdown Control Channels in the Core	12
Hexagonal Fuel Element Dimensions, m (in.)	
Flat-to-flat dimension, including gaps between elements	0.3610 (14.212)
Height	0.7930 (31.22)
Active Core Height, m (in.)	7.93 (312.2)
Fissile Material in Kernel (19.8% enriched U)	$UC_{0.29}O_{1.63}$
Fertile Material in Kernel (natural U)	$UC_{0.29}O_{1.63}$
Control Rod Hole Diameter, mm (in)	101.6 (4.0)
RSC Hole Diameter, mm (in)	95.25 (3.75)
Coolant Holes Per Element, small / large	
Standard Element	6/102
Control and RSC Element	7/88
Coolant Hole Diameter, mm (in)	
Small	12.70 (0.50)
Large	15.88 (0.625)
Hole pitch between coolant and fuel holes, mm (in)	18.80 (0.74)
FBP Holes Per Element	6
FBP Hole Diameter, mm (in)	12.70 (0.50)
FBP Rods Per Element, average #	5
FBP Rod Diameter, mm (in)	11.43 (0.45)
Length, m (in)	.7214 (28.40)
Fuel Holes, Under Dowels/ Not Under Dowels	
Standard Element	24/186
Control and RSC Elements	24/162
Fuel Hole Diameter, mm (in)	12.70 (0.50)
Fuel Compact Diameter, mm (in)	12.45 (0.49)

including the gaps between the elements. The standard fuel element, shown in Fig. 2-3, contains an essentially continuous pattern of fuel and coolant holes in a triangular array. Exceptions are the central handling hole, which is surrounded by smaller coolant holes, and six corner holes available for fixed burnable poison (FBP) compacts. The reserve shutdown and control fuel elements differ from the standard fuel elements in that they contain 95.3 mm (3.75 in.) and 101.6 mm (4.0 in.) diameter channels, respectively (see Fig. 2-4). Those channels replace 24 fuel and 11 coolant holes. The pitch of the coolant and fuel hole array is 18.8 mm (0.74 in.).

The element design data was used to calculate the volume of the components in the standard, control, and RSC elements, and the volumes, and volume fractions for the entire core. Table 2-2 gives the volumes of the solid components, volumes of the open voids where coolant can directly flow, and volumes for the closed voids that are internal to the element.

2.3 FUEL DESIGN

The fuel cycle employs low-enriched uranium (LEU) and natural uranium (NU). The fissile fuel is a two-phase mixture of 19.8% enriched uranium in $UC_{0.29}O_{1.63}$. The fertile fuel is the same as the fissile fuel, except that natural uranium is used rather than enriched uranium. The fissile fuel material is formed into kernels with a 350 μm diameter, and the fertile fuel material is formed into kernels with a 500 μm diameter. These fissile and fertile kernels are coated into particles, which are blended and bonded together with a carbonaceous binder into fuel compacts (Fig. 2-5).

The fuel compacts contained in the fuel holes have a 12.45 mm (0.49 in.) diameter with a length of 49.3 mm (1.94 in.). Each fuel compact is a mixture of fissile and fertile particles bonded by a carbonaceous matrix. These compacts are stacked in the fuel holes. The six stacks under each of the four dowels contain 14 fuel compacts; all other stacks contain 15 fuel compacts.

2.4 REFLECTOR ELEMENT DESIGN

The hexagonal reflector elements have a size, shape, and handling hole that are similar to the fuel elements, except that some of the reflector elements are half-height or three-quarter height. The inner (central) reflector includes 37 columns of hexagonal reflector elements. The outer side

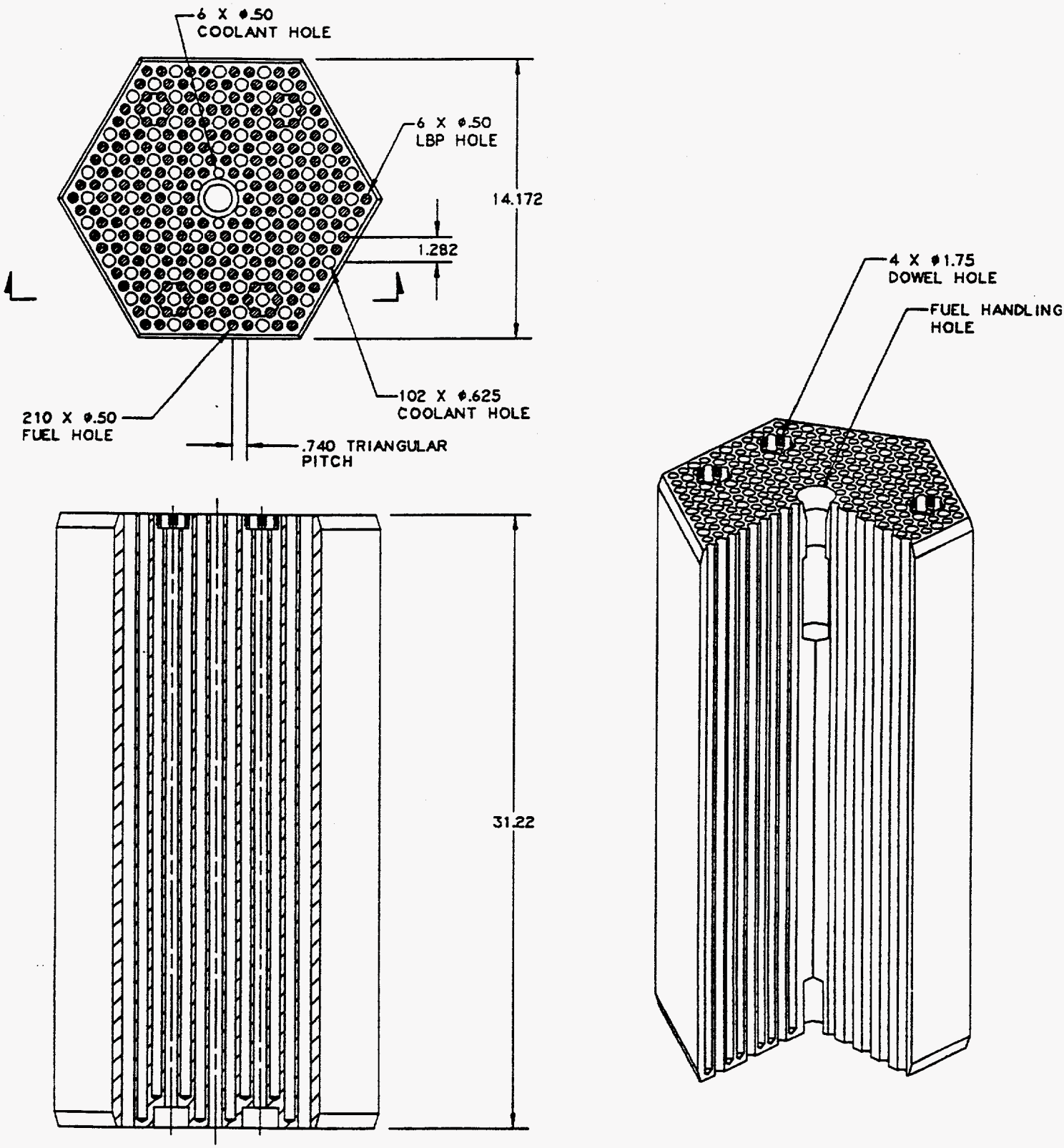

FIGURE 2-3 STANDARD FUEL ELEMENT

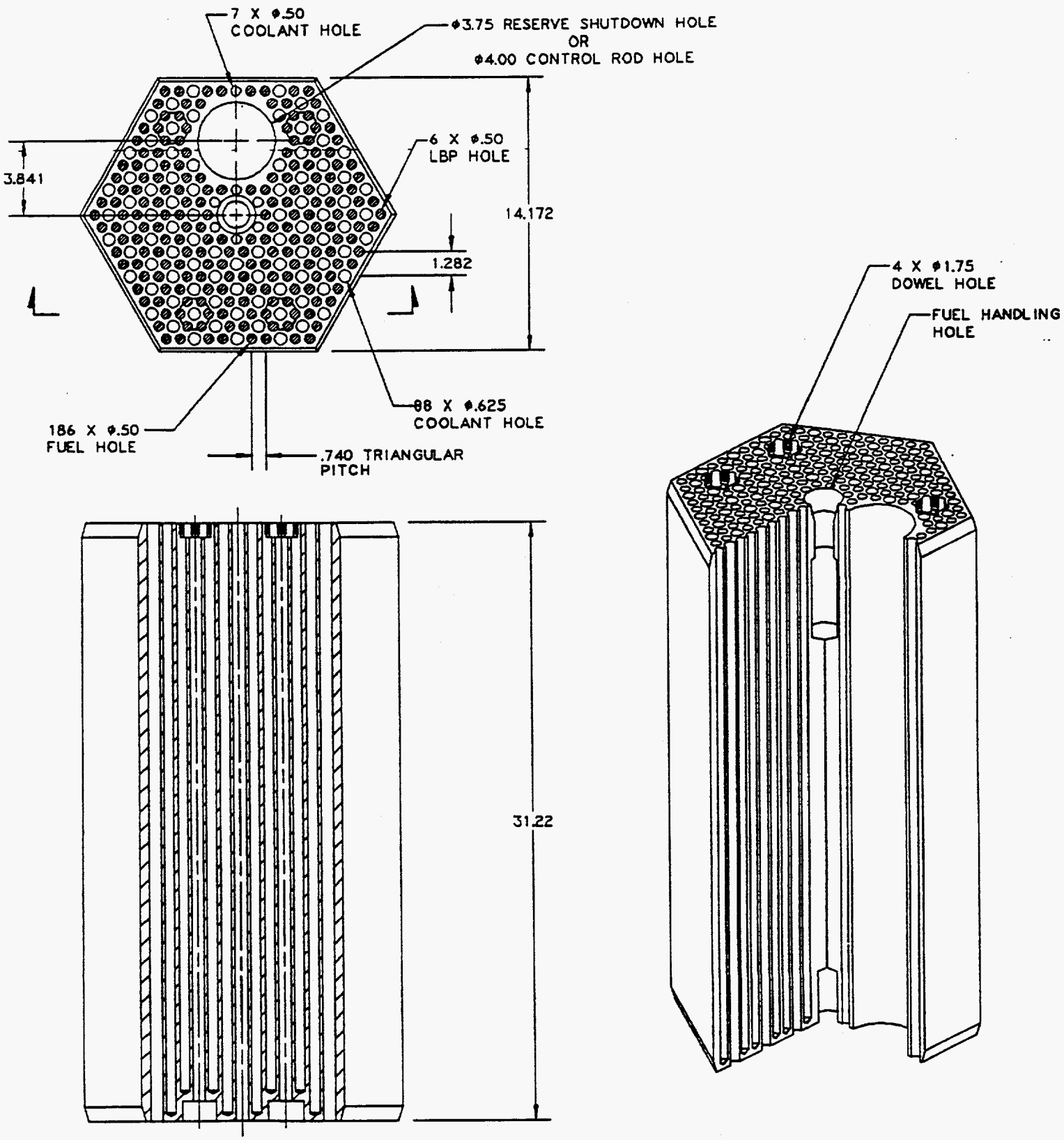

FIGURE 2-4 CONTROL OR RESERVE SHUTDOWN FUEL ELEMENT

TABLE 2-2
ELEMENT AND CORE VOLUMES

	Standard Element, (m^3)	Control/RSC Element, (m^3)	Entire Core, (m^3)	Volume Fraction (%)
Solid Volumes				
Graphite Block	5.036-02	4.821-2/4.899-2	41.875	55.71
Fuel Rods	1.874-02	1.658-02	15.224	20.25
FBP Rods	3.701-04	3.701-04	3.109-01	0.4135
Fuel & FBP Hole Plugs	1.715-04	1.524-04	1.395-01	0.19
Dowels	1.698-04	1.698-04	1.426-01	0.19
Total			57.692	76.75
Open Void Volumes				
Control Holes	0.0	6.429-3/5.651-3	1.450	1.93
Coolant Holes	1.661-02	1.472-02	13.499	17.96
Gaps Between Blocks	5.030-04	5.030-04	4.225-01	0.56
Handling Hole	2.964-04	2.964-04	2.490-01	0.34
Tooling Hole	2.698-05	2.698-05	2.266-02	0.03
End Bevels	9.584-05	9.584-05	8.051-02	0.11
Dowel Holes	9.501-05	9.501-05	7.981-02	0.11
Total			15.803	21.02
Closed Void Volumes				
Fuel Holes	1.829-03	1.626-03	1.487	1.98
FBP Holes	2.201-04	2.201-04	1.849-01	0.25
Total			1.672	2.22
Total Volume	8.949-02	8.949-02	75.172	100.00
Number of Elements	600	120/120	840	

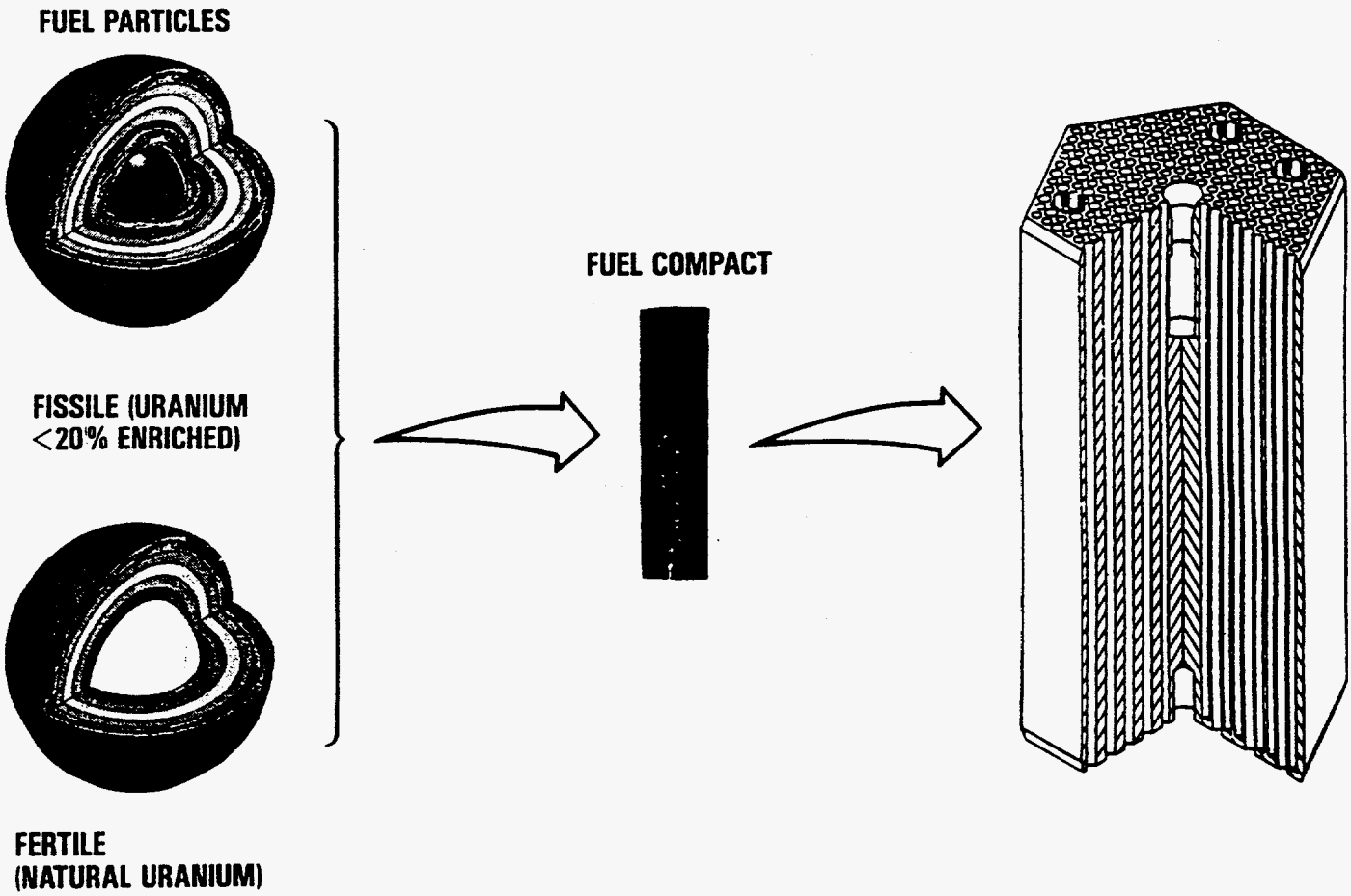

FIGURE 2-5 FUEL ELEMENT COMPONENTS

reflector includes two rows of hexagonal reflector columns as shown in Fig. 2-2. Twenty-four of the elements in the inner row of the outer reflector also have a control rod channel as shown in Fig. 2-6. The control rod channel has a diameter of 102 mm (4 in.) and stops at an elevation just below the active core. The control rod channel is centered on the flat nearest the active core 102 mm (4.028 in.) from the center of the reflector element. The distance from the flat of the reflector block to the edge of the control rod channel is 27 mm (1.06 in.).

2.5 CONTROL MATERIAL

The core reactivity is controlled by a combination of fixed lumped burnable poison (FBP) compacts and movable control rods. The FBP consists of boron carbide (B_4C) granules dispersed in graphite compacts. There is an average of 5.0 FBP rods (each rod is a stack of FBP compacts) per element in reload segment B of the initial core. The FBP compact diameter is 11.43 mm (0.45 in.). However, to simplify the benchmark calculations, it is assumed that there are seven FBP rods in each segment B element, with one FBP rod in the center of each 1/7 of the element, and that each of these FBP rods is of a smaller diameter to conserve the actual FBP volume per element.

The control rods are located in rows one and two of the core, and in the inner ring of the outer reflector (Fig. 2-2). The absorber compacts in the control rods consist of 40 wt % natural boron in B_4C granules uniformly dispersed in a graphite matrix. The annular absorber compacts have an inner diameter of 52.3 mm (2.06 in.) and an outer diameter of 84.8 mm (3.34 in.). These compacts are enclosed in metal canisters for structural support and to limit oxidation of the boron carbide. The backup reserve shutdown control (RSC) is also available in the form of boronated pellets that may be released into channels in the active core. This RSC material is not included in the MHTGR benchmark problems.

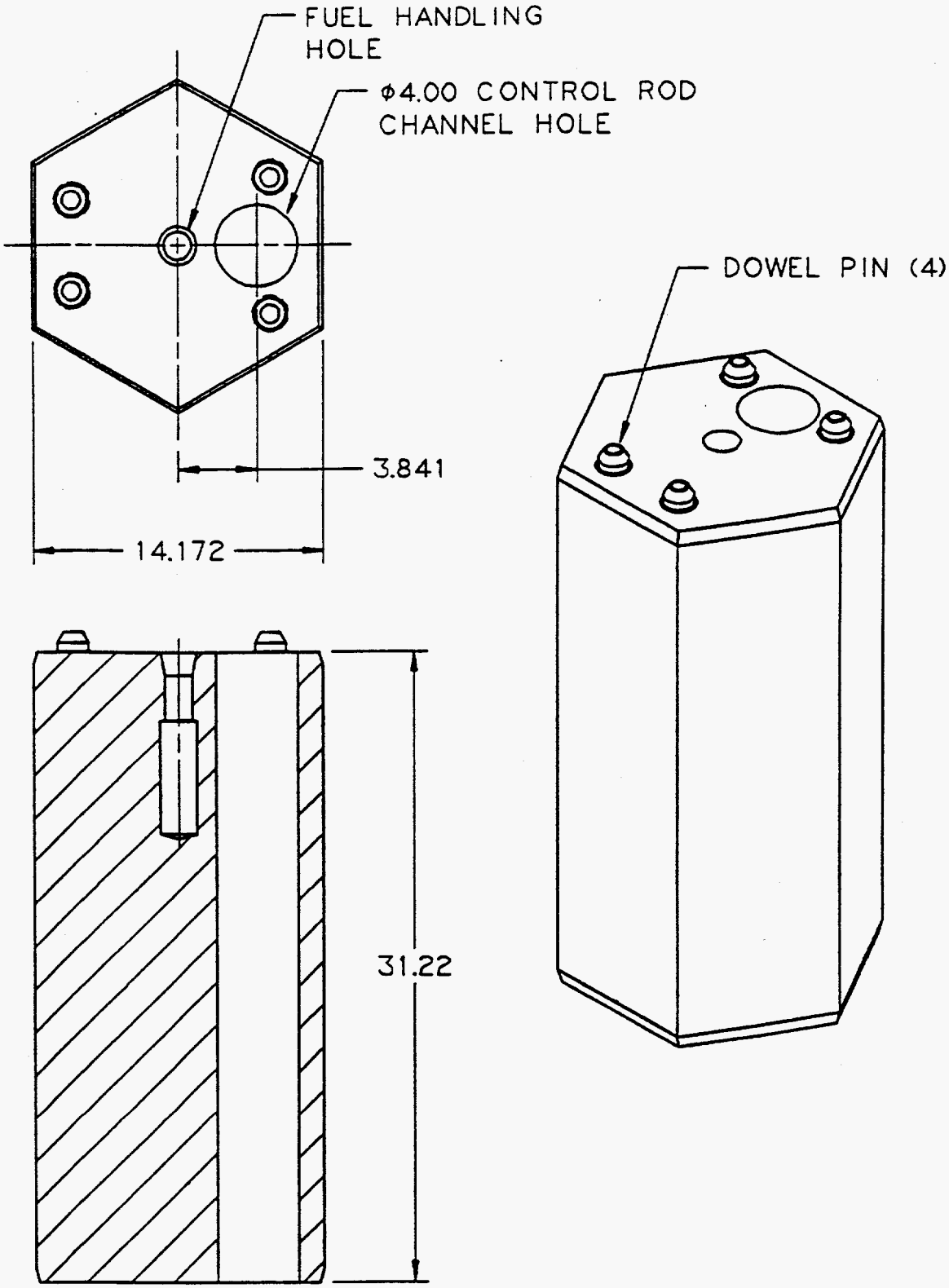

FIGURE 2-6 REFLECTOR CONTROL ELEMENT

3. MHTGR BENCHMARK PROBLEMS

3.1 BENCHMARK CALCULATIONS TO BE PERFORMED

A series of calculational benchmark problems for the MHTGR core are proposed, based on a 450 MW(t) annular core containing 84 columns. The selected problems use BOIC atom densities to avoid the complexities of fuel depletion, and the nominal dimensions for core components used in previous MHTGR analyses. Six different benchmark models are specified :

Model 1 :	1-D Radial, Cylindrical Geometry
Model 2 :	1-D Axial, Slab Geometry
Model 3 :	2-D Radial, Hexagonal Geometry, 1 Hex per Element
Model 4 :	2-D Radial, Hexagonal Geometry, 7 Hexes per Element
Model 5 :	3-D Radial, Hexagonal Geometry, 1 Hex per Element
Model 6 :	3-D Radial, Hexagonal Geometry, 7 Hexes per Element

The following benchmark cases are defined for each of the above models:

Case 1	-	cold reactor, all control rods out, dry
Case 2	-	hot reactor, all control rods out, dry
Case 3	-	cold reactor, all control rods out, with moisture ingress
Case 4	-	hot reactor, all control rods out, with moisture ingress

In addition, the following all-rods-in cases are defined for the 2-D and 3-D models:

Case 5	-	cold reactor, all control rods inserted, dry
Case 6	-	hot reactor, all control rods inserted, dry
Case 7	-	cold reactor, all control rods inserted, with moisture ingress
Case 8	-	hot reactor, all control rods inserted, with moisture ingress

These benchmark calculations are summarized in Table 3-1. The nuclear analyst should attempt to calculate the power distribution and K-eff for as many of these benchmark problems as possible. By comparing the calculational results for the various cases, additional parameters are obtained, such as cold-to-hot temperature defect, control rod worth, and moisture ingress reactivity worth. These are the parameters that are most useful for validating the computer methods that are

TABLE 3-1

MHTGR BENCHMARK CALCULATIONS TO BE PERFORMED

Benchmark Case :				1	2	3	4	5	6	7	8
Temperature :				Cold	Hot	Cold	Hot	Cold	Hot	Cold	Hot
All Control Rods Inserted:				No	No	No	No	Yes	Yes	Yes	Yes
With Moisture Ingress :				No	No	Yes	Yes	No	No	Yes	Yes
Model	Dimensions	Geometry	Hexes / Element	Benchmark Calculations Are to be Performed							
1	1	Radial, cyl.		Yes	Yes	Yes	Yes	No	No	No	No
2	1	Axial, slab		Yes	Yes	Yes	Yes	No	No	No	No
3	2	Hexagonal	1	Yes	Yes	Yes	Yes	Yes	Yes	Yes	Yes
4	2	Hexagonal	7	Yes	Yes	Yes	Yes	Yes	Yes	Yes	Yes
5	3	Hex-Z	1	Yes	Yes	Yes	Yes	Yes	Yes	Yes	Yes
6	3	Hex-Z	7	Yes	Yes	Yes	Yes	Yes	Yes	Yes	Yes

used for physics design and analysis of the MHTGR. It should be noted that additional K-eff data may be obtained from the 0-D cross section calculations, and that, if necessary, the nuclear analyst can construct an R-Z model from the 1-D radial and 1-D axial models.

Analysts performing these benchmark calculations are to use the atom densities, temperatures, and dimensions provided in this document for their calculations. Items that are not specified, such as the neutron energy group structure, the source of the basic cross section data, the computer codes to be used, methods of including core leakages, etc., are to be selected by the analyst based upon what is deemed to be most appropriate for these benchmark problems.

3.2 CALCULATION OF CROSS SECTIONS

Microscopic cross sections for the core regions must be generated which account for the fuel particle and fuel rod heterogeneities at the various core temperatures. Microscopic cross sections for the reflectors must also be generated which account for the various reflector temperatures. The core and reflector cross sections must be generated for dry and moisture ingress conditions. Multi-group shielding factors must be accounted for in the calculation of the FBP and control rod cross sections. The data below should be sufficient to calculate these cross sections. If additional data is needed, it should be found in Section 2.

3.2.1 Core Cross Sections

Fuel particle and fuel rod heterogeneities must be accounted for in the calculation of the microscopic cross sections for the core. The nuclear analyst may use a two region model, where region 1 is the fuel rod, i.e. stack of fuel compacts, and region 2 represents the average amount of the fuel block per fuel rod. The average fuel rod for the entire core may be used in the calculation, or separate microscopic cross sections may be calculated for the two fuel segments, designated "A" and "B". The MHTGR core layout used for these benchmark problems is shown in Figure 3-1. This figure includes the locations of fuel segments A and B, but does not include the permanent reflector blocks. The data for these calculations is provided in Table 3-2.

Atom densities for the FBP are included in Table 3-2, and the nuclear analysts is encouraged to include, if possible, the FBP in the calculations of the core cross sections, provided that the effect of the FBP shielding also is included in the spectrum calculation. Calculation of core

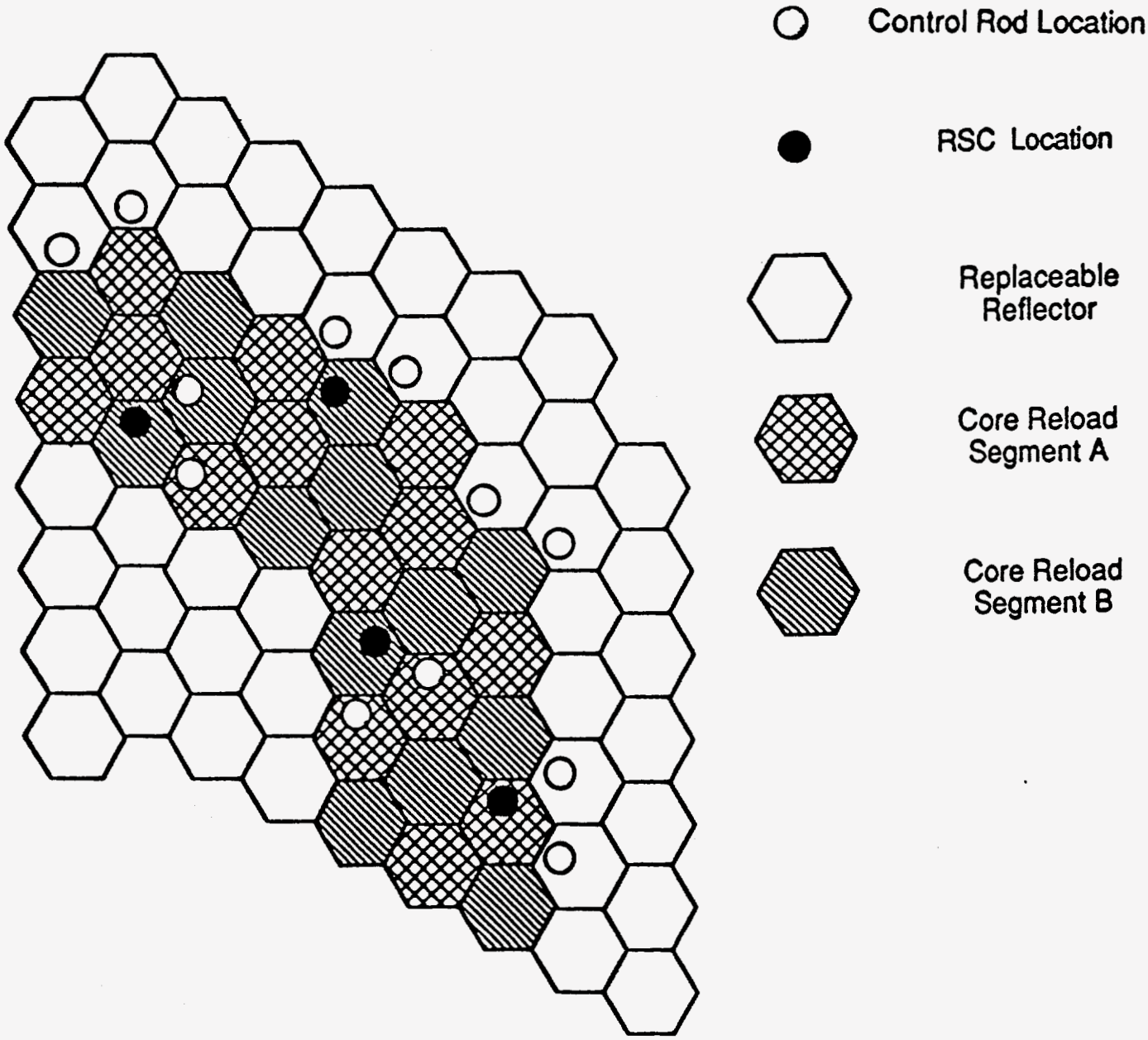

FIGURE 3-1 120° MODEL OF THE 84 COLUMN CORE

TABLE 3-2

DATA FOR THE CALCULATION OF DRY CORE CROSS SECTIONS

Average Atom Densities	Fuel Segment A	Fuel Segment B	Core Average
U-235 (fissile particle)	1.00362E-05	1.52990E-05	1.26676E-05
U-238 (fissile particle)	4.01382E-05	6.11860E-05	5.06621E-05
U-235 (fertile particle)	4.62862E-07	4.62862E-07	4.62862E-07
U-238 (fertile particle)	6.38200E-05	6.38200E-05	6.38200E-05
B-10 (FBP)	0.00000E+00	2.59600E-06	1.29800E-06
Boron (homogeneous)	1.99968E-08	1.98986E-08	1.99477E-08
Carbon	6.23773E-02	6.20709E-02	6.22241E-02
Oxygen	1.86571E-04	2.29458E-04	2.08014E-04
Silicon	3.60864E-04	4.83171E-04	4.22017E-04
Reg. 1 Densities			
Fissile U-235	4.95552E-05	7.55410E-05	6.25481E-05
Fissile U-238	1.98188E-04	3.02115E-04	2.50151E-04
Fertile U-235	2.28545E-06	2.28545E-06	2.28545E-06
Fertile U-238	3.15120E-04	3.15120E-04	3.15120E-04
Boron (homogeneous)	2.13782E-08	2.07215E-08	2.10498E-08
Carbon	6.66857E-02	6.46372E-02	6.56615E-02
Oxygen	9.21220E-04	1.13298E-03	1.02710E-03
Silicon	1.78182E-03	2.38572E-03	2.08377E-03
Reg. 2 Densities			
B-10 (FBP)	0.0	3.25528E-06	1.62764E-06
Boron (homogeneous)	1.96462E-08	1.96898E-08	1.96680E-08
Carbon	6.12832E-02	6.14191E-02	6.13511E-02
Atom Densities in Fissile Kernels			
U-235	4.83921E-03	4.83921E-03	4.83921E-03
U-238	1.93537E-02	1.93537E-02	1.93537E-02
Carbon	7.01593E-03	7.01593E-03	7.01593E-03
Oxygen	3.94344E-02	3.94344E-02	3.94344E-02

TABLE 3-2 (Continued)

Atom Densities in Fertile Kernels			
U-235	1.74189E-04	1.74189E-04	1.74189E-04
U-238	2.40174E-02	2.40174E-02	2.40174E-02
Carbon	7.01593E-03	7.01593E-03	7.01593E-03
Oxygen	3.94344E-02	3.94344E-02	3.94344E-02
Radius (cm)			
Region 1 (fuel rod)	0.6223	0.6223	0.6223
Region 2 (graphite block)	1.3828	1.3828	1.3828
Fissile kernels	0.0350	0.0350	0.0350
Fertile kernels	0.0500	0.0500	0.0500
Volume Fractions			
Region 1 (fuel region) in cell	0.202526	0.202526	0.202526
Region 2 (graphite block) in cell	0.797474	0.797474	0.797474
Fissile kernels in fuel compact	0.01024034	0.01561020	0.01292527
Fertile kernels in fuel compact	0.01312051	0.01312051	0.01312051

cross sections with moisture ingress must include additional hydrogen and oxygen with 8.894E-04 and 4.447E-04 cell averaged atom densities to simulate 1000 Kg of H_2O in the core. It should be assumed that this moisture does not enter the fuel rods, but is located entirely in region 2, so that the region 2 hydrogen and oxygen atom densities must be increased to 1.115E-03 and 5.576E-04, respectively, based on a region 2 volume fraction of 0.797474.

3.2.2 Reflector Cross Sections

The reflectors in the benchmark problems are carbon, with impurities simulated by homogenized B-10. For the cold benchmark calculations, all reflectors are at 300 K. For the hot benchmark calculations, reflector regions are at 600, 750, 900, and 1050 K. Multi-group cross sections are to be calculated for the reflector regions using the atom densities in Table 3-3 for these temperatures under dry and moisture ingress conditions. These cross section calculations may use a fission source, a leakage source, or a mixture of the two. These reflector cross sections will be used for all of the benchmark problems.

3.2.3 Shielded FBP Cross Sections

The microscopic cross sections for B-10 in the FBP must be generated with care due to the considerable self-shielding effect at the beginning of the initial cycle. The benchmark problems are based on a core at the beginning of the initial cycle, with two fuel segments (A and B) located as in Figure 3-1. Only the Segment B fuel elements contain FBP, with five FBP rods per element on average, giving an average FBP volume fraction of 0.004135, as in Table 2-2. However, for simplicity and consistency for these benchmark calculations, it shall be assumed that there is one FBP rod in the center of each subhex (1 / 7 of an element), so that there are the equivalent of seven FBP rods in each segment B fuel element for all MHTGR benchmark models. The radius of each of these seven FBP pins is reduced to maintain the same FBP volume fraction as with the five actual FBP pins in the element. All the benchmark problems should use the same shielded B-10 cross sections homogeneously distributed in a region, such as an element or subhex, to represent the FBP . This shielded B-10 cross section is calculated from a single higher order transport cell calculation using a 1-D annular cell model based on a standard Segment B subhex with an FBP rod at its center. The details for this 1-D model of the FBP cell are given in Table 3-4.

TABLE 3-3

DATA FOR CALCULATION OF REFLECTOR CROSS SECTIONS

Regions :	Radial and Axial Replaceable Reflectors		Permanent Reflectors
With moisture ingress :	No	Yes	
Nuclide			
Hydrogen	0.0	1.057-04	0.0
B-10	2.76490E-08	2.76490E-08	5.78645E-08
Carbon	8.62465E-02	8.62465E-02	9.02493E-02
Oxygen	0.0	5.286-05	0.0
Temperatures (K):	300, 600, 750, 900, 1050	300, 600, 750, 900, 1050	300, 600

TABLE 3-4

DATA FOR 1-D FBP CELL CALCULATION

Cross-sectional area of subhex = 1 / 7 of the cross-sectional area of an element = 161.217 cm^2

Cross-sectional area of FBP rod = (161.217) (0.004135) = 0.667 cm^2

Region :	Region 1	Region 2
This region represents :	FBP Rod	Remainder of subhex
Radius (cm)	0.4607	7.164
Atom densities in region :		
U-235 (fissile particle)		1.53626E-05
U-238 (fissile particle)		6.14401E-05
U-235 (fertile particle)		4.64784E-07
U-235 (fertile particle)		6.40850E-05
B-10 (homogeneous)	6.27811E-04	1.99812E-08
Carbon	7.11510E-02	6.20332E-02
Oxygen		2.30410E-04
Silicon		4.85177E-04

3.2.4 Shielded Control Rod Cross Sections

A macroscopic cross section for an isolated MHTGR control rod, whether located in a fuel or reflector element, should be calculated using the 1-D cell described in Table 3-5. The graphite sleeve in the model represents the extra graphite provided by designers which is placed at the edge of the control rod channel to strengthen the control rod element.

This 1-D cell model of the control rod may be used as part of a larger more detailed 1-D or 2-D transport cell which includes the fuel and/or reflector material that surrounds the control rod. The details of this more complex cell are left to the nuclear analyst. The fuel and reflector atom densities surrounding the control rod should be taken from the input data listed in Section 3.3.3 for the full "hex" block model or from Section 3.3.4, which uses 1 / 7 size "subhexes." The equivalent radius of a cylindricized subhex is 7.164 cm, and of a full element is 18.953 cm. These values should be used for the outer dimension of a 1-D control rod cell calculation, depending on whether it is for a control rod in a subhex or in a full element.

For simplicity, the control rod cell calculations should only be performed at 300 K under dry conditions, but the resulting control rod shielding factors should be applied to both hot and cold benchmark problems under dry and moisture ingress conditions. The rodded cases to be calculated in the 2-D and 3-D benchmark problems are only for fully rodded configurations. Partial rod insertions in the core do not need to be modeled. The final control rod cross sections will need to be shielded appropriately for the homogeneous regions being used, either one entire fuel or reflector element, or one 1 / 7 element size subhex (see Sections 3.3.3 through 3.3.6). The control rod cross section should be a macroscopic cross section with shielding factors applied, homogenized over the element or subhex, depending on the geometry being used in the MHTGR benchmark calculation. The homogenized macroscopic control rod cross section should include the shielded homogenized cladding around the B_4C as well as the B_4C.

3.3 SPECIFICATION OF MODELS FOR BENCHMARK CALCULATIONS

A series of calculational benchmark problems for the MHTGR core are proposed, based on a 450 MW(t) annular core containing 84 columns. The selected problems use BOIC atom densities to avoid the complexities of fuel depletion, and the nominal dimensions for core components used in previous MHTGR analyses. The benchmark calculations include six different core models:

TABLE 3-5

DATA FOR 1-D CONTROL ROD CELL CALCULATION

Region	Description	Outer Radius (cm)	Volume Fraction
1	Void	2.39	0.138
2	Steel Cladding	2.51	0.014
3	Void	2.62	0.014
4	Natural Boron Compact	4.24	0.269
5	Void	4.45	0.044
6	Steel Cladding	4.57	0.026
7	Void	5.08	0.119
8	Graphite Sleeve	6.43	0.376
			1.000

The atom densities used in this cell are as follows:

Region	Description	Atom Density (atoms / barn-cm)
2, 6	Steel cladding around B_4C Compact	Cr = 0.0171
		Mn = 0.0006
		Fe = 0.0391
		Ni = 0.0272
4	Natural boron compact	B-Nat = 0.0357
		Carbon = 0.0481
8	Graphite Sleeve	Carbon = 0.0826

Model 1 : 1-D Radial, Cylindrical Geometry
Model 2 : 1-D Axial, Slab Geometry
Model 3 : 2-D Radial, Hexagonal Geometry, 1 Hex per Element
Model 4 : 2-D Radial, Hexagonal Geometry, 7 Hexes per Element
Model 5 : 3-D Radial, Hexagonal Geometry, 1 Hex per Element
Model 6 : 3-D Radial, Hexagonal Geometry, 7 Hexes per Element

All the models assume that the actual dimension for the outer radial and axial boundaries are located at the inside edge of the boronated steel pins located in the axial and radial reflectors. These six models are to use a zero boundary condition (flux = 0.0) at the outer radial and axial boundaries. The following data is provided for the above models :

(1) Beginning of initial cycle atom densities, properly homogenized in atoms / barn-cm.
(2) Temperatures in Kelvin
(3) Dimensions in cm

Section 2 provides detailed dimensional data on the MHTGR reactor components for those who may wish to use more detailed geometric models, e.g. Monte Carlo calculations, for higher order comparisons to the benchmark problems defined in this section.

3.3.1 1-D Radial Model

The geometric locations of each region in the 1-D radial model are shown schematically in Figure 3-2. The geometry and homogenized atom densities, in atoms / barn-cm, are provided in Table 3-6. Heavy metal U-235 and U-238 nuclide densities are provided for both the fissile and fertile fuel particles. The outer boundary of the permanent reflector is specified to be 306.609 cm, which is the actual location of the inside edge of the boronated steel pins in the permanent reflector. The FBP B-10 is shielded burnable poison, calculated as described in Section 3.2.3, while the homogeneous B-10 is unshielded and represents impurities in the carbon. The hydrogen and oxygen atom densities for moisture ingress cases, with 1000 kg of water in the core, should be added as follows:

Core Component	Regions	Hydrogen	Oxygen
Active core	3, 4, 5	8.894E-04	4.447E-04
Radial reflector	1, 2, 6, 7	1.057E-04	5.286E-05
Permanent Reflector	8	0.0	0.0

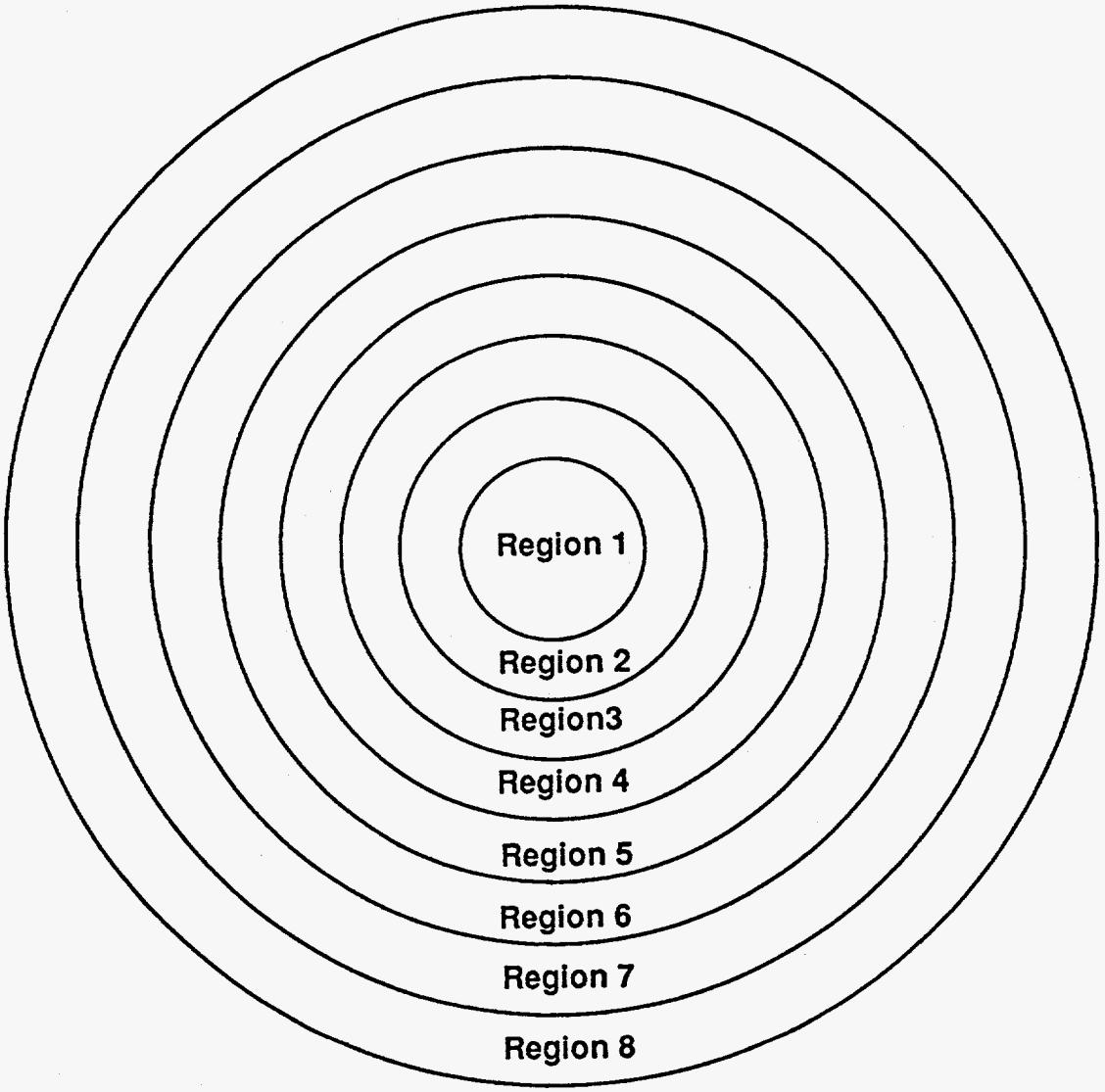

FIGURE 3-2 MODEL FOR 1-D RADIAL BENCHMARK CALCULATIONS

TABLE 3-6

DATA FOR 1-D RADIAL BENCHMARK

Region	Core Component	Dimensions (cm)		Temperature (K)	
		Inner	Outer	Cold	Hot
1	Inner removable reflector	0.0	82.614	300	900
2	Inner removable reflector	82.614	115.287	300	1050
3	Inner fuel ring	115.287	148.028	300	971
4	Middle fuel ring	148.028	180.801	300	971
5	Outer fuel ring	180.801	208.484	300	971
6	Outer removable reflector	208.484	241.976	300	900
7	Outer removable reflector	241.976	275.309	300	750
8	Permanent reflector	275.309	306.609	300	600

Type :	Core Row 1	Core Row 2	Core Row 3	Replaceable Reflector Blocks Standard	Replaceable Reflector Blocks Stan.+Control	Permanent Reflector
Region :	3	4	5	1, 2, 7	6	8
Nuclides						
Fissile U-235	9.71808-06	1.45561-05	1.31388-05			
Fissile U-238	3.88659-05	5.82148-05	5.25465-05			
Fertile U-235	5.63669-07	4.20195-07	4.24884-07			
Fertile U-238	7.77194-05	5.79369-05	5.85836-05			
B-10 (FBP)	1.29800-06	1.29800-06	1.29800-06			
B-10 (homo.)	1.97473-08	1.99866-08	2.00691-08	2.76490-08	2.65007-08	5.78645-08
Carbon	6.15989-02	6.23453-02	6.26030-02	8.62465-02	8.26645-02	9.02493-02
Oxygen	2.06800-04	2.13744-04	2.03256-04			
Silicon	3.81267-04	4.54140-04	4.22495-04			

3.3.2 1-D Axial Model

Figure 3-3 provides the location of each region in the 1-D axial model of the MHTGR. The homogenized atom densities, in atoms / barn-cm, are provided in Table 3-7. The temperatures are listed in Table 3-8. The homogenized FBP B-10 should use the same shielded cross sections for all axial regions in the core as were utilized in Section 3.3.1 in the 1-D radial model. For moisture ingress problems, again assuming 1000 kg of water in the core, the following hydrogen and oxygen atom densities should be used :

Core Components	Axial Regions	Hydrogen	Oxygen
Axial reflectors	1, 12	8.894E-04	4.447E-04
Active core	2 to 11	8.894E-04	4.447E-04

3.3.3 2-D Hexagonal Model

The 2-D hexagonal model uses one-third core symmetry (Figures 3-4 and 3-5) with atom densities (Table 3-9) homogenized over each hexagonal fuel or reflector element. Figure 3-4 provides the scheme by which the various elements are located geometrically in the model using the ring number, and the hex number within the ring. The composition types of each element in the one-third core model are shown in Figure 3-5. The temperature distribution in the 2-D hexagonal model is identical to that of the 1-D radial model, as given in Table 3-10. Control rod configurations are also defined for the 2-D hexagonal model in Table 3-10. In one-third geometry, this includes four control rods located in the fuel and eight control rods located in the outer reflector. The shielded macroscopic control rod cross sections (calculated using the higher order cell calculations discussed in Section 3.2.4) should be added to these locations. For the moisture ingress cases, with 1000 kg of water in the core, the hydrogen and oxygen atom densities are given below. It is assumed that no water enters the permanent reflector during a water ingress.

Core Component	Ring	Hex	Hydrogen	Oxygen
Removable reflector	1, 2, 3, 4	All	1.057E-04	5.286E-05
"	7	1, 7	"	"
"	8	All	"	"
"	9	2 to 8, 10 to 16	"	"
Active core	5, 6	All	8.894E-04	4.447E-04
"	7	2 to 6, 8 to 12	"	"

Dimension in cm	Region Number	Axial Region
0.0		
	1	Upper axial reflector
118.949		
	2	Core fuel layer 1
198.248		
	3	Core fuel layer 2
277.547		
	4	Core fuel layer 3
356.845		
	5	Core fuel layer 4
436.144		
	6	Core fuel layer 5
515.443		
	7	Core fuel layer 6
594.742		
	8	Core fuel layer 7
674.041		
	9	Core fuel layer 8
753.339		
	10	Core fuel layer 9
843.638		
	11	Core fuel layer 10
911.937		
	12	Lower axial reflector
951.079		

FIGURE 3-3 MODEL FOR 1-D AXIAL BENCHMARK CALCULATIONS

TABLE 3-7

ATOM DENSITIES FOR 1-D AXIAL BENCHMARK

Type :	Axial Reflectors	Core Axial Layers 1 and 2	Core Axial Layer 3	Core Axial Layers 4, 5, 6
Axial Regions:	1, 12	2 and 3	4	5, 6, and 7
Nuclides				
Fissile U-235		9.73945E-06	1.21838E-05	1.46155E-05
Fissile U-238		3.89514E-05	4.87272E-05	5.84524E-05
Fertile U-235		4.62862E-07	4.62862E-07	4.62862E-07
Fertile U-238		6.38200E-05	6.38200E-05	6.38200E-05
B-10 (FBP)		1.03840E-06	1.53164E-06	1.53164E-06
B-10 (homo.)	2.20874E-08	1.99477E-08	1.99477E-08	1.99477E-08
Carbon	6.88980E-02	6.22241E-02	6.22241E-02	6.22241E-02
Oxygen		2.08014E-04	2.08014E-04	2.08014E-04
Silicon		4.22017E-04	4.22017E-04	4.22017E-04

Type :	Core Axial Layer 7	Core Axial Layer 8	Core Axial Layers 9 and 10
Axial Regions:	8	9	10 and 11
Nuclides			
Fissile U-235	1.46155E-05	1.21838E-05	1.21838E-05
Fissile U-238	5.84524E-05	4.87272E-05	4.87272E-05
Fertile U-235	4.62862E-07	4.62862E-07	4.62862E-07
Fertile U-238	6.38200E-05	6.38200E-05	6.38200E-05
B-10 (FBP)	1.34992E-06	1.34992E-06	1.03840E-06
B-10 (homo.)	1.99477E-08	1.99477E-08	1.99477E-08
Carbon	6.22241E-02	6.22241E-02	6.22241E-02
Oxygen	2.08014E-04	2.08014E-04	2.08014E-04
Silicon	4.22017E-04	4.22017E-04	4.22017E-04

TABLE 3-8

TEMPERATURES FOR 1-D AXIAL BENCHMARK

Region	Core Component	Dimensions (cm)		Temperature (K)	
		Beginning	End	Cold	Hot
1	Upper reflector	0.0	118.949	300	600
2	Fuel Layer 1	118.949	198.248	300	971
3	Fuel Layer 2	198.248	277.547	300	971
4	Fuel Layer 3	277.547	356.845	300	971
5	Fuel Layer 4	356.845	436.144	300	971
6	Fuel Layer 5	436.144	515.443	300	971
7	Fuel Layer 6	515.443	594.742	300	971
8	Fuel Layer 7	594.742	674.041	300	971
9	Fuel Layer 8	674.041	753.339	300	971
10	Fuel Layer 9	753.339	832.638	300	971
11	Fuel Layer 10	832.638	911.937	300	971
12	Lower reflector	911.937	951.079	300	900

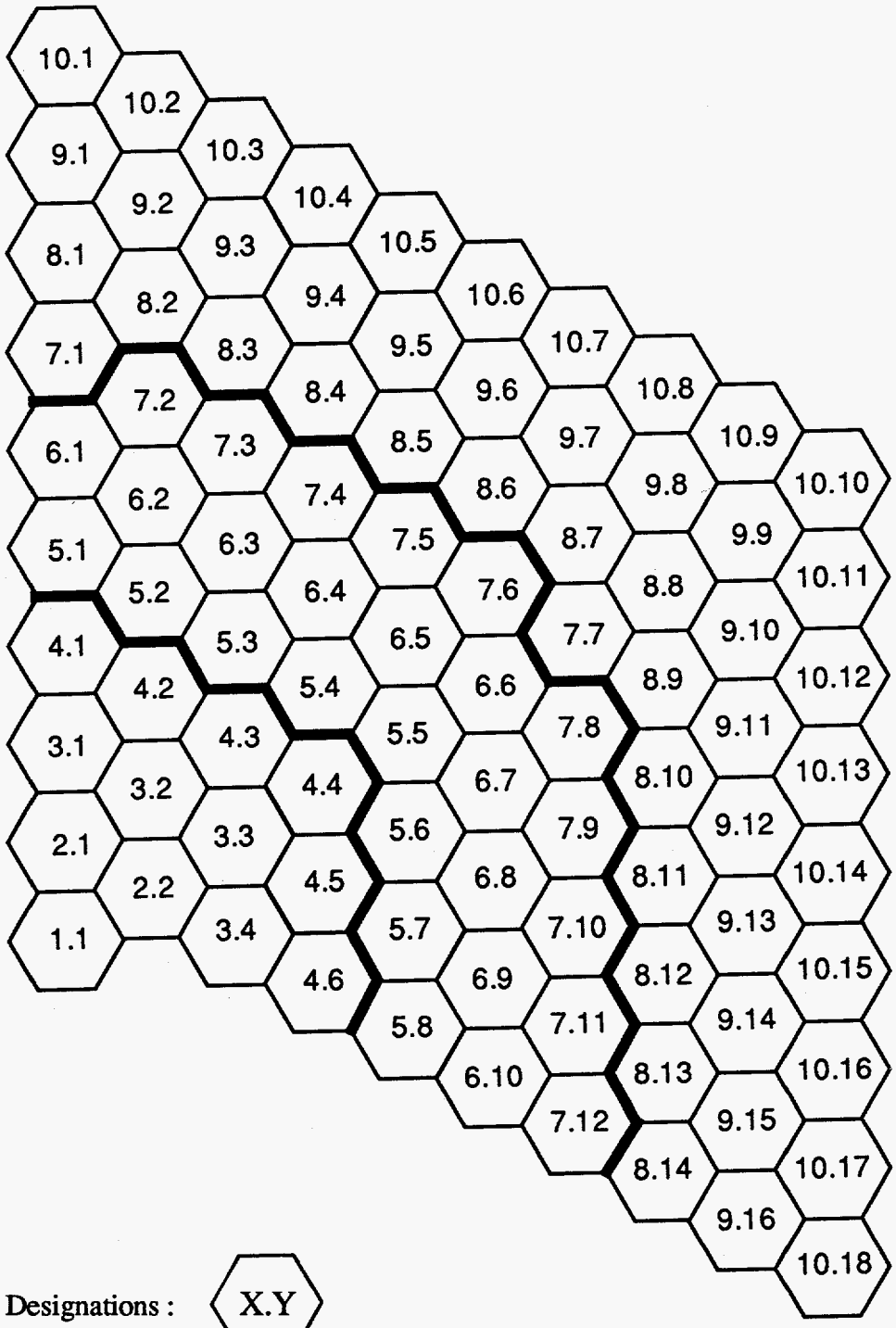

Element Designations : X.Y

where X = Ring Number

Y = Hex Number Within Ring X

FIGURE 3-4 ELEMENT LOCATIONS FOR HEXAGONAL BENCHMARKS

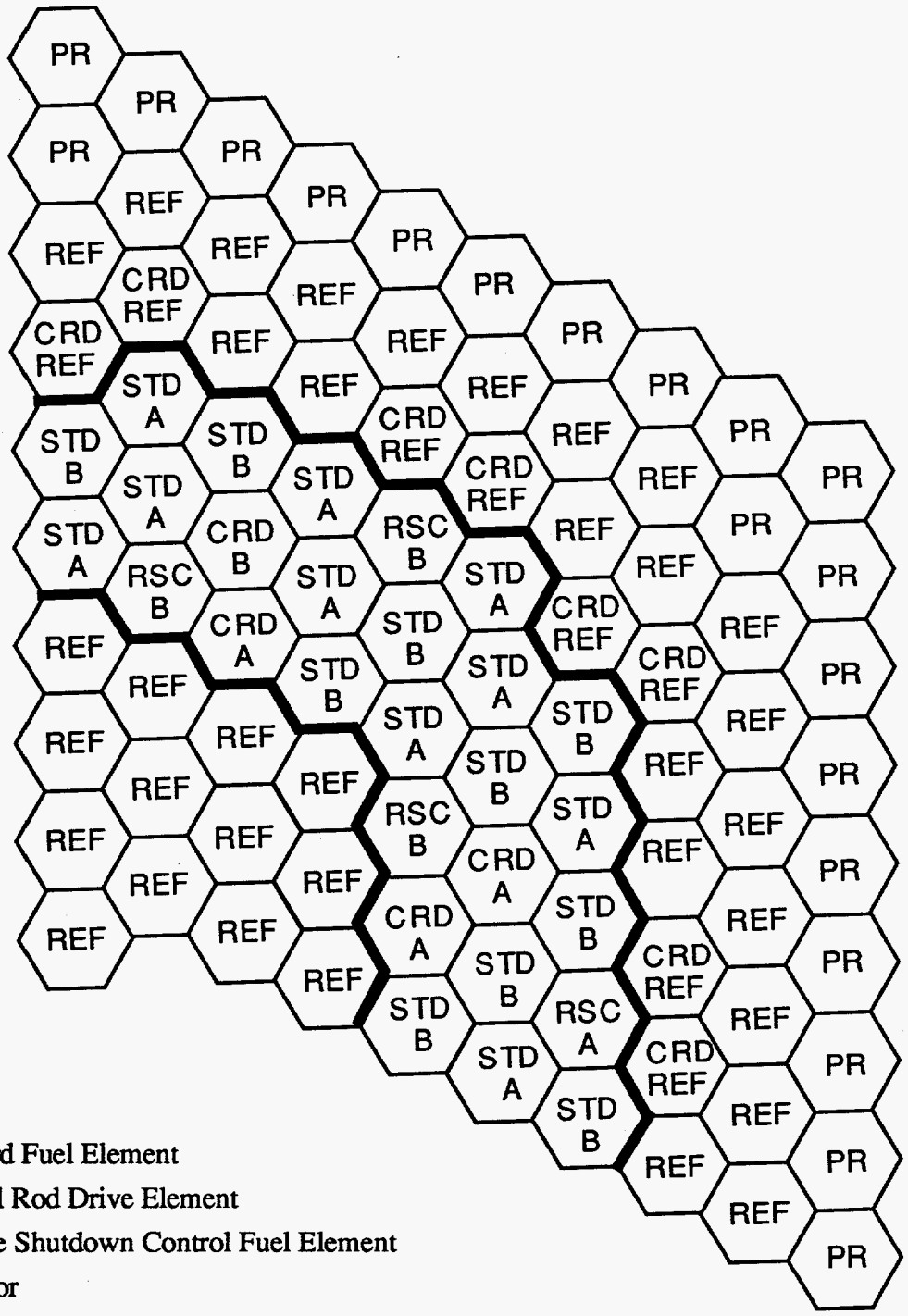

STD = Standard Fuel Element

CRD = Control Rod Drive Element

RSC = Reserve Shutdown Control Fuel Element

REF = Reflector

PR = Permanent Reflector

A = Segment A Fuel Element

B = Segment B Fuel Element

FIGURE 3-5 ELEMENT TYPES FOR HEXAGONAL BENCHMARKS

TABLE 3-9

ATOM DENSITIES FOR 2-D HEXAGONAL BENCHMARK

Type :	Standard Fuel	Control Fuel	Standard Fuel	Control Fuel
Segment :	A	A	A	A
Ring :	5	5	6	6
Hexes :	1, 5	3, 7	2, 4, 6, 10	8
Nuclides				
Fissile U-235	8.16980E-06	7.22894E-06	1.18043E-05	1.04449E-05
Fissile U-238	3.26738E-05	2.89110E-05	4.72093E-05	4.17725E-05
Fertile U-235	5.98109E-07	5.29229E-07	4.30101E-07	3.80569E-07
Fertile U-238	8.24680E-05	7.29707E-05	5.93028E-05	5.24733E-05
B-10 (FBP)	0.0	0.0	0.0	0.0
B-10 (homo.)	2.03294E-08	1.91456E-08	2.02990E-08	1.91187E-08
Carbon	6.34149E-02	5.97222E-02	6.33199E-02	5.96381E-02
Oxygen	2.01980E-04	1.78719E-04	1.93562E-04	1.71271E-04
Silicon	3.54782E-04	3.13924E-04	3.92920E-04	3.47670E-04

Type :	Standard Fuel	RSC Fuel	Standard Fuel	RSC Fuel
Segment :	A	A	B	B
Ring :	7	7	5	5
Hexes :	2, 4, 6, 9	11	4, 8	2, 6
Nuclides				
Fissile U-235	1.06549E-05	9.42785E-06	1.24539E-05	1.10197E-05
Fissile U-238	4.26126E-05	3.77052E-05	4.98074E-05	4.40714E-05
Fertile U-235	4.34901E-07	3.84816E-07	5.98109E-07	5.29229E-07
Fertile U-238	5.99647E-05	5.30590E-05	8.24680E-05	7.29707E-05
B-10 (FBP)	0.0	0.0	2.59600E-06	2.59600E-06
B-10 (homo.)	2.03261E-08	1.93860E-08	2.02211E-08	1.92930E-08
Carbon	6.34046E-02	6.04720E-02	6.30768E-02	6.01818E-02
Oxygen	1.85283E-04	1.63945E-04	2.36891E-04	2.09610E-04
Silicon	3.67533E-04	3.25207E-04	4.54343E-04	4.02019E-04

TABLE 3-9 (Continued)

Type :	Standard Fuel	Control Fuel	Standard Fuel	RSC Fuel
Segment :	B	B	B	B
Ring :	6	6	7	7
Hexes :	1, 5, 7, 9	3	3, 8, 10, 12	5
Nuclides				
Fissile U-235	1.79942E-05	1.59219E-05	1.62422E-05	1.43717E-05
Fissile U-238	7.19651E-05	6.36774E-05	6.49580E-05	5.74772E-05
Fertile U-235	4.30101E-07	3.80569E-07	4.34901E-07	3.84816E-07
Fertile U-238	5.93028E-05	5.24733E-05	5.99647E-05	5.30590E-05
B-10 (FBP)	2.59600E-06	2.59600E-06	2.59600E-06	2.59600E-06
B-10 (homo.)	2.01427E-08	1.89803E-08	2.01850E-08	1.92611E-08
Carbon	6.28323E-02	5.92065E-02	6.29643E-02	6.00822E-02
Oxygen	2.44004E-04	2.15904E-04	2.30813E-04	2.04232E-04
Silicon	5.36773E-04	4.74957E-04	4.97379E-04	4.40099E-04

	Atom Densities (atoms/b-cm)	
	B-10 (homo.)	Carbon
Removable Reflector Elements : Ring 1, Hex 1 Ring 2, Hexes 1, 2 Ring 3, Hexes 1, 2, 3, 4 Ring 4, Hexes 1 to 6 Ring 8, Hexes 1, 3, 4, 7, 8, 10, 11, 14 Ring 9, Hexes 2 to 8, 10 to 16	2.76490E-08	8.62465E-02
Removable Reflector Control Elements : Ring 7, Hexes 1, 7 Ring 8, Hexes 2, 5, 6, 9, 12, 13	2.56395E-08	7.99780E-02
Permanent Reflector, Ring 9, Hexes 1, 9 Ring 10, Hexes 1 to 18	4.88999E-08	7.62674E-02

TABLE 3-10

TEMPERATURES AND CONTROL RODS FOR 2-D HEXAGONAL BENCHMARK

Core Component	Location		Temperature (K)	
	Ring	Hex	Cold	Hot
Inner reflector	1 to 3	All	300	900
Inner reflector	4	All	300	1050
Inner fuel ring	5	All	300	971
Middle fuel ring	6	All	300	971
Outer fuel ring	7	2 to 6, 8 to 12	300	971
Outer reflector	7	1, 7	300	900
Outer reflector	8	2 to 7, 9 to 14	300	900
Outer reflector	8	1, 8	300	750
Outer reflector	9	2 to 8, 10 to 16	300	750
Permanent reflector	9	1, 9	300	600
Permanent reflector	10	All	300	600

Control Rod Location		Ring	Hex
Fuel -	Segment A	5	3
	Segment A	5	7
	Segment B	6	3
	Segment A	6	8
Outer reflector		7	1
Outer reflector		7	7
Outer reflector		8	2
Outer reflector		8	5
Outer reflector		8	6
Outer reflector		8	9
Outer reflector		8	12
Outer reflector		8	13

The nuclear analyst should use his own judgment in modeling the permanent reflector, so long as it is consistent with the 306.609 cm outer dimension given in Table 3-6. The option presented in Figure 3-5 models the permanent reflector as 20 columns in the 1/3 core layout. The permanent reflector atom densities in Table 3-6 were multiplied by the ratio of the permanent reflector volumes in the 1-D radial model compared to the 2-D hexagonal model (0.845075) to produce the permanent reflector atom densities in Table 3-9. This was done to conserve the total mass of the permanent reflector. The flat-to-flat dimension of each hexagon should be set equal to 36.09848 cm, consistent with the 14.212 inches in Table 2-1.

3.3.4 2-D Subhex Model

The 2-D subhex model uses the same hexagonal geometry as described in Section 3.3.3, except that each hexagonal fuel or reflector element is now modeled as seven separate "subhexes," as shown in Figure 3-6, with the flat-to-flat dimension of each subhex being 13.64394 cm. An added designator for subhex number is now used along with ring number and hex within ring number (as shown in Figure 3-4) to place subhex fuel and reflector types precisely in the 2-D geometric model. The subhex numbers 1 through 7 are located within every hexagonal element with the pattern shown in Figure 3-7. The atom density types used in the 2-D subhex model are given in Table 3-11. In this table, Figure 3-4 should be used to reference the ring and hex numbers, and Figure 3-7 should be used to reference the subhex numbers. The atom densities for each atom density type are given in Table 3-12. The nuclear analysts should use the same model for the permanent reflector in this subhex model as was used in the hexagonal model. Figure 3-7 and Table 3-11 assume that the permanent reflector is modeled by 20 columns in the 1/3 core layout. The atom densities for the subhexes in the replaceable and permanent reflectors are given in Table 3-13.

The temperature distribution and control rod locations are defined in Table 3-14. The temperature distribution in the 2-D radial subhex model is the same as that presented in the previous section. In one-third geometry, the control rods are located as shown in Figure 3-7. Appropriately shielded control rod cross sections and atom densities should be added to these subhex locations based upon the higher order cell calculations discussed in Section 3.2.4. As in the previous section, the moisture ingress cases assume 1000 kg of water in the core, with the following hydrogen and oxygen atom densities :

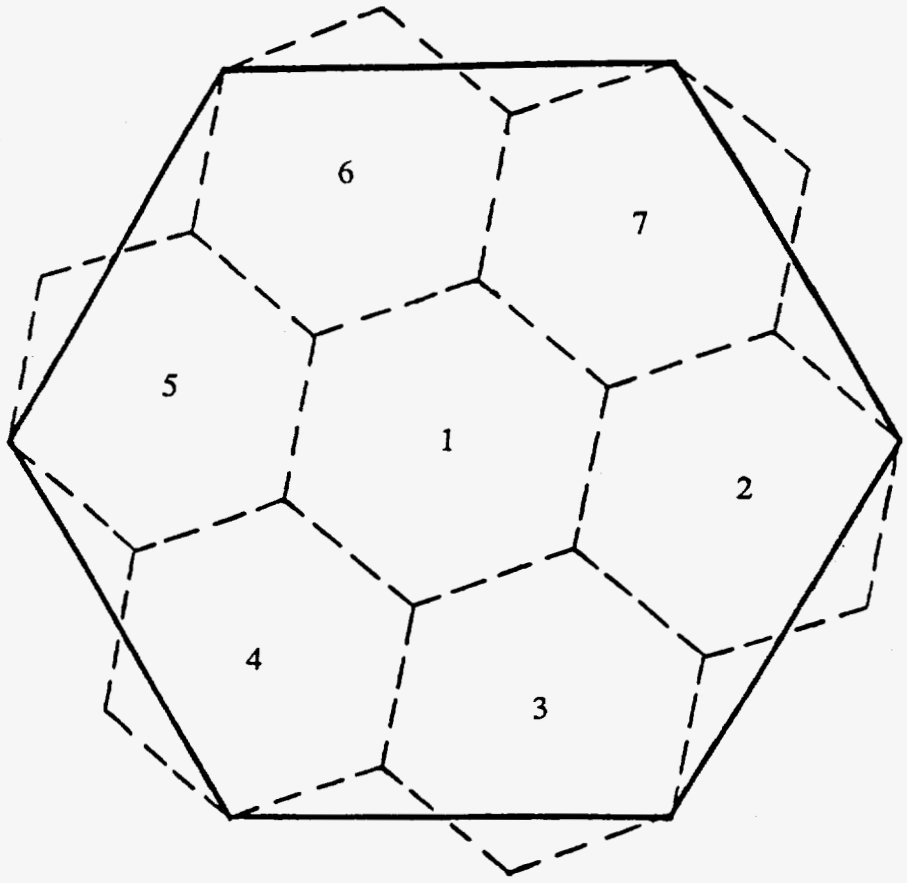

FIGURE 3-6 SUBHEX GEOMETRY USED TO MODEL AN ELEMENT

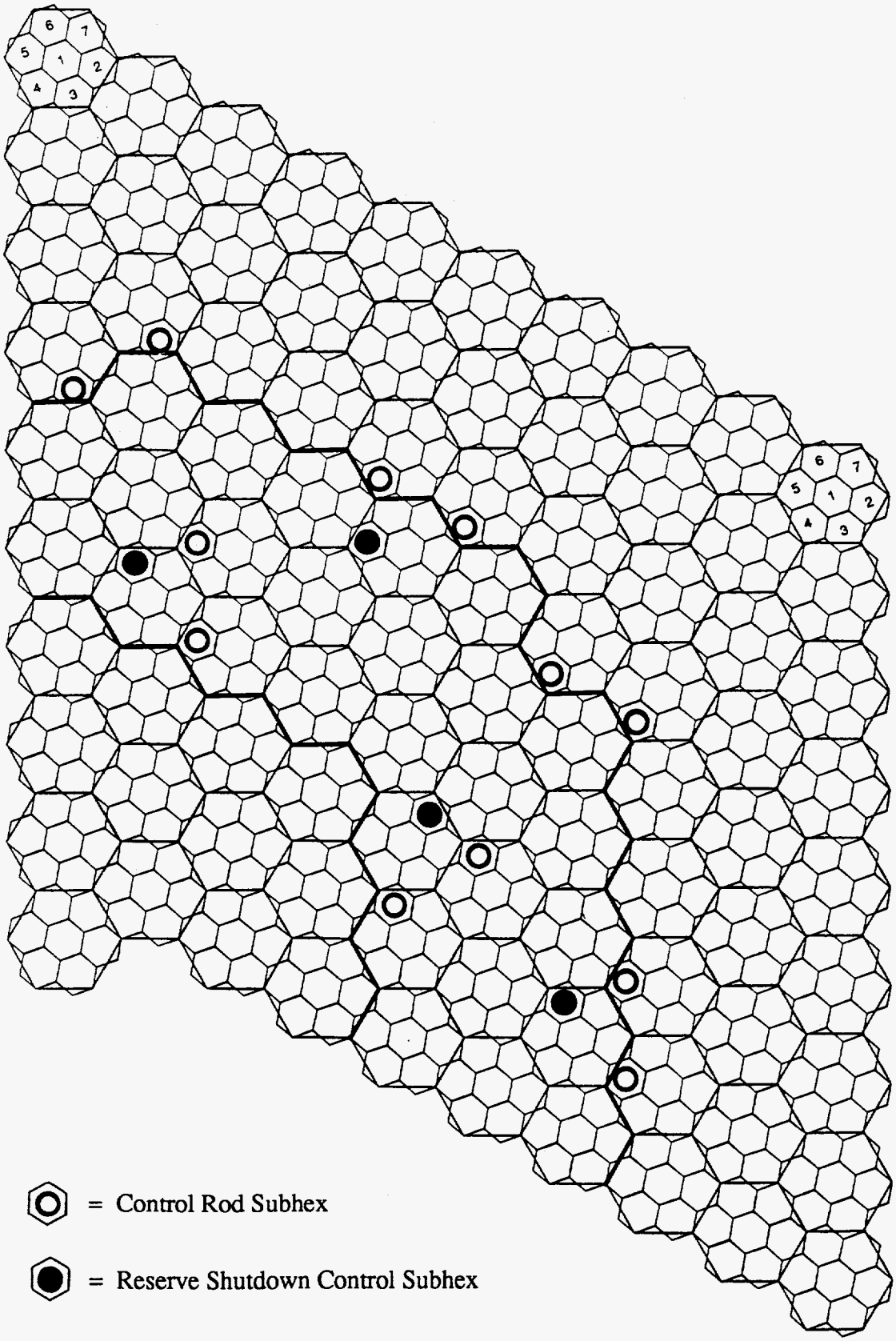

FIGURE 3-7 GEOMETRY FOR SUBHEX BENCHMARKS

TABLE 3-11

CORE ATOM DENSITY TYPES FOR 2-D SUBHEX BENCHMARK

Atom Den. Type	Reload Segment	Ring	Subhex Type	Hexes	Subhexes
1	A	5	Standard	1, 5	All
				3	1, 2, 3, 4, 6, 7
				7	1, 2, 3, 4, 5, 7
2	A	5	Control	3	5
				7	6
3	A	6	Standard	2, 4, 6, 10	All
				8	1, 2, 3, 4, 5, 7
4	A	6	Control	8	6
5	A	7	Standard	2, 4, 6, 9	All
				11	1, 2, 3, 4, 5, 7
6	A	7	RSC	11	6
7	B	5	Standard	4, 8	All
				2	1, 2, 3, 4, 5, 7
				6	1, 2, 3, 4, 5, 6
8	B	5	RSC	2	6
				6	7
9	B	6	Standard	1, 5, 7, 9	All
				3	1, 2, 3, 4, 6, 7
10	B	6	Control	3	5
11	B	7	Standard	3, 8, 10, 12	All
				5	1, 2, 3, 4, 6, 7
12	B	7	RSC	5	5

TABLE 3-12

CORE ATOM DENSITIES FOR 2-D SUBHEX BENCHMARK

Atom Den. Type	1	2	3	4	5	6
Reload Segment	A	A	A	A	A	A
Ring	5	5	6	6	7	7
Subhex Type	Standard	Control Rod	Standard	Control Rod	Standard	RSC
Nuclide						
Fissile U-235	8.16980E-06	1.58378E-06	1.18043E-05	2.28835E-06	1.06549E-05	2.06554E-06
Fissile U-238	3.26738E-05	6.33408E-06	4.72093E-05	9.15190E-06	4.26126E-05	8.26080E-06
Fertile U-235	5.98109E-07	1.15948E-07	4.30101E-07	8.33784E-08	4.34901E-07	8.43090E-08
Fertile U-238	8.24680E-05	1.59871E-05	5.93028E-05	1.14963E-05	5.99647E-05	1.16246E-05
B-10 (FBP)	0.00000E+00	0.00000E+00	0.00000E+00	0.00000E+00	0.00000E+00	0.00000E+00
B-impurity	2.03294E-08	1.20429E-08	2.02990E-08	1.20370E-08	2.03261E-08	1.37454E-08
Carbon (total)	6.34149E-02	3.75660E-02	6.33199E-02	3.75476E-02	6.34046E-02	4.28767E-02
Oxygen	2.01980E-04	3.91555E-05	1.93562E-04	3.75236E-05	1.85283E-04	3.59185E-05
Silicon	3.54782E-04	6.87773E-05	3.92920E-04	7.61707E-05	3.67533E-04	7.12492E-05

Atom Den. Type	7	8	9	10	11	12
Reload Segment	B	B	B	B	B	B
Ring	5	5	6	6	7	7
Subhex Type	Standard	RSC	Standard	Control Rod	Standard	RSC
Nuclide						
Fissile U-235	1.24539E-05	2.41429E-06	1.79942E-05	3.48833E-06	1.62422E-05	3.14867E-06
Fissile U-238	4.98074E-05	9.65557E-06	7.19651E-05	1.39510E-05	6.49580E-05	1.25926E-05
Fertile U-235	5.98109E-07	1.15948E-07	4.30101E-07	8.33784E-08	4.34901E-07	8.43090E-08
Fertile U-238	8.24680E-05	1.59871E-05	5.93028E-05	1.14963E-05	5.99647E-05	1.16246E-05
B-10 (LBP)	2.59600E-06	2.59600E-06	2.59600E-06	2.59600E-06	2.59600E-06	2.59600E-06
B-impurity	2.02211E-08	1.37245E-08	2.01427E-08	1.20062E-08	2.01850E-08	1.37175E-08
Carbon (total)	6.30768E-02	4.28116E-02	6.28323E-02	3.74515E-02	6.29643E-02	4.27898E-02
Oxygen	2.36891E-04	4.59232E-05	2.44004E-04	4.73021E-05	2.30813E-04	4.47449E-05
Silicon	4.54343E-04	8.80780E-05	5.36773E-04	1.04058E-04	4.97379E-04	9.64209E-05

TABLE 3-14

TEMPERATURES AND CONTROL RODS FOR 2-D SUBHEX BENCHMARK

Core Component	Location			Temperature (K)	
	Ring	Hex	Subhex	Cold	Hot
Inner reflector	1 to 3	All	All	300	900
Inner reflector	4	All	All	300	1050
Inner fuel ring	5	All	All	300	971
Middle fuel ring	6	All	All	300	971
Outer fuel ring	7	2 to 6, 8 to 12	All	300	971
Outer reflector	7	1, 7	All	300	900
Outer reflector	8	2 to 7, 9 to 14	All	300	900
Outer reflector	8	1, 8	All	300	750
Outer reflector	9	2 to 8, 10 to 16	All	300	750
Permanent reflector	9	1, 9	All	300	600
Permanent reflector	10	All	All	300	600

Control Rod Location	Ring	Hex	Subhex
Fuel - Segment A	5	3	5
Segment A	5	7	6
Segment B	6	3	5
Segment A	6	8	6
Outer reflector	7	1	3
Outer reflector	7	7	4
Outer reflector	8	2	3
Outer reflector	8	5	4
Outer reflector	8	6	4
Outer reflector	8	9	4
Outer reflector	8	12	5
Outer reflector	8	13	5

Core Component	Hydrogen	Oxygen
Removable reflector	1.057E-04	5.286E-05
Active core	8.894E-04	4.447E-04

3.3.5 3-D Hexagonal Model

The 3-D hexagonal model uses the same radial geometry as the 2-D hexagonal model presented in Section 3.3.3, except with the axial dimension added. The axial geometry for the upper reflector, 10 layers of fuel, and lower reflector in the 3-D model uses the same axial dimensions as used in Section 3.3.2 for the 1-D axial model (Figure 3-3).

The upper and lower reflector regions in the 3-D model should use the same atom densities as were defined in the 1-D axial model in Section 3.3.2. The 10 layers of fuel incorporate axial zoning of both the fissile heavy metal fuel particles and the FBP. The fertile heavy metal is not axially zoned. Therefore, the atom densities provided for the 2-D hexagonal model in Section 3.3.3 should be used for all 10 layers of fuel, except for the FBP and the U-235 and U-238 in the fissile particles, which must be multiplied by the axial zoning factors given in Table 3-13 for each axial fuel layer.

The control rod locations are also given Table 3-15. The control rod drives are designed so that at full retraction none of the natural boron compact material appears in the upper reflector region of the 3-D model. At full insertion, the boron compact resides completely in the 10 layers of fuel, but not in the upper or lower axial reflector regions.

The temperature distributions for the 3-D hexagonal model are as follows :

Case	Component Temperature
Cold	All regions at 300 K
Hot	Top reflector (above the core and radial reflectors) at 600 K Lower reflector (below the core and radial reflectors) at 900 K All core and radial reflector layers (over the height of the fueled core) use the radial temperatures defined in Section 3.3.3

Under moisture ingress conditions, the 3-D hexagonal model must include the following hydrogen and oxygen densities :

TABLE 3-15
AXIAL ZONING FACTORS AND CONTROL RODS
FOR 3-D HEXAGONAL BENCHMARK

Axial Layer	Fissile Particle U-235 and U-238 Zoning Factor	FBP B-10 Zoning Factor
1 (top)	0.769	0.80
2	0.769	0.80
3	0.962	1.15
4	1.154	1.15
5	1.154	1.20
6	1.154	1.20
7	1.154	1.05
8	0.962	1.05
9	0.962	0.80
10 (bottom)	0.962	0.80
	1.000	1.00

Axial Region	Control Rod Boron Present All-Rods-In	All-Rods-Out
Upper reflector	No	No
Fuel layer 1	Yes	No
Fuel layer 2	Yes	No
Fuel layer 3	Yes	No
Fuel layer 4	Yes	No
Fuel layer 5	Yes	No
Fuel layer 6	Yes	No
Fuel layer 7	Yes	No
Fuel layer 8	Yes	No
Fuel layer 9	Yes	No
Fuel layer 10	Yes	No
Lower reflector	No	No

Core Component	Hydrogen	Oxygen
Radial reflectors over entire height	1.057E-04	5.286E-05
Active core + axial reflectors	8.894E-04	4.447E-04

3.3.6 3-D Subhex Model

The 3-D subhex model extends the 2-D subhex model presented in Section 3.3.4 in exactly the same manner as the 3-D hexagonal model of Section 3.3.5 extended the analogous 2-D model of Section 3.3.3. The zoning factors, temperatures, and rod location definitions used in Section 3.3.5 should also be applied in the 3-D subhex model. As in Section 3.3.5, the process is as follows:

1. Use the axial dimensions and upper and lower reflector atom densities from Section 3.3.2.
2. Use the radial hexagonal layout and atom densities from Section 3.3.4 for the 10 layers of fuel.
3. Use the axial zoning factors defined in Section 3.3.5 as multipliers for the fissile particle U-235 and U-238 and the FBP B-10 atom densities in fuel layers 1 through 10.
4. Use the temperature, moisture ingress, and control rod data provided in Section 3.3.5.