Document ID: TEV-674
Revision ID: 1
Effective Date: 05/15/10

## Technical Evaluation Study

## Project No. 23843

# Power Cycles for the Generation of Electricity from a Next Generation Nuclear Plant

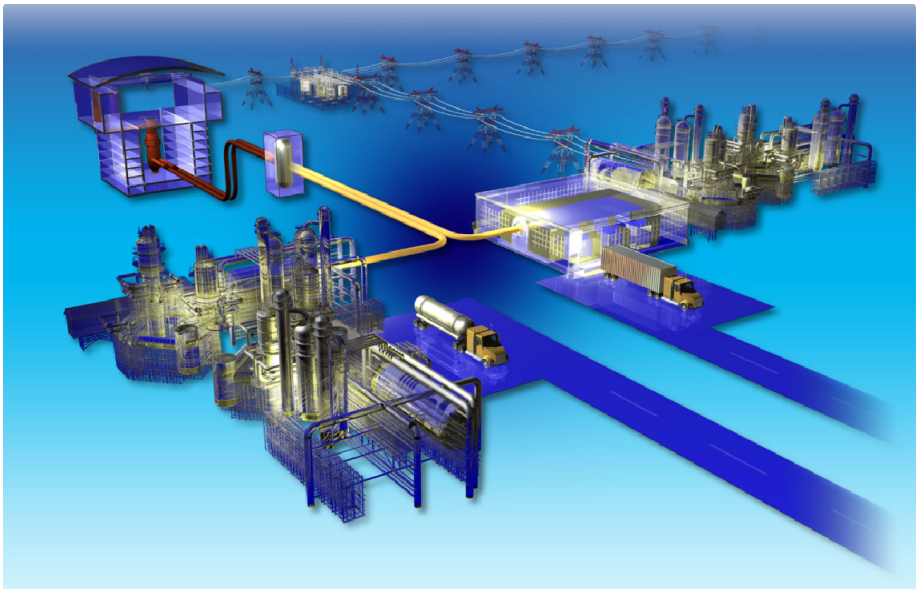

The INL is a U.S. Department of Energy National Laboratory
operated by Battelle Energy Alliance.

Idaho National Laboratory

| POWER CYCLES FOR THE GENERATION OF ELECTRICITY FROM A NEXT GENERATION NUCLEAR PLANT | Identifier: TEV-674<br>Revision: 1<br>Effective Date: 05/15/10 Page: 1 of 101 |
|---|---|

| NGNP Project | Technical Evaluation Study (TEV) | eCR Number: 577603 |
|---|---|---|

## Signatures

| Signature and Typed or Printed Name | Signature Code | Date (mm/dd/yyyy) | Organization/Discipline |
|---|---|---|---|
| Michael G. McKellar<br>M. G. McKellar | P | 5/15/2010 | NGNP Engineering Support |
| Richard D Boardman<br>R. D. Boardman | A | 5/5/2010 | NGNP Engineering Support |
| M. W. Patterson | C | 5/5/2010 | NGNP Engineering Technical Manager |

**P** For preparer of the document.

**A** For approval: This is for non-owner approvals that may be required as directed by a given program or project. This signature may not be applicable for all uses of this form.

**C** For documented review and concurrence.

**Note** Applicable QLD: REC-000101

## REVISION LOG

| Rev. | Date | Affected Pages | Revision Description |
|---|---|---|---|
| 0 | 11/03/09 | All | Newly issued document. |
| 1 | 05/15/10 | All | URS comments incorporated & economics |
| | | | |
| | | | |
| | | | |
| | | | |
| | | | |
| | | | |
| | | | |
| | | | |
| | | | |
| | | | |
| | | | |

# EXECUTIVE SUMMARY

This technical evaluation (TEV) has been prepared as part of a study for the Next Generation Nuclear Plant (NGNP) Project to evaluate integration of high-temperature gas-cooled reactor (HTGR) technology with conventional chemical processes. This TEV addresses the integration of an HTGR with power cycles, with the main product being electricity.

An HTGR can produce steam, high-temperature helium, and/or electricity. In conventional processes these products are generated by the combustion of fossil fuels such as coal and natural gas, resulting in significant emissions of greenhouse gases such as carbon dioxide ($CO_2$). Heat or electricity produced in an HTGR could be used to supply process heat or electricity to conventional processes without generating any greenhouse gases. This report describes how nuclear-generated heat could be used to generate electricity and provides a preliminary economic analysis of nuclear-integrated electric power generation.

The following list identifies the major conclusions drawn evaluating the nuclear-integrated electric power generation:

- A 600 MWt HTGR can generate 239 MWe with a Rankine steam cycle and 274 MWe with a combined Brayton gas/Rankine steam cycle
- A natural gas combined cycle (NGCC) can generate 320 MWe from 600 MWt generated from combusting natural gas
- The NGCC generates 2,843 tons/day of $CO_2$
- The HTGR generates 0 tons/day of $CO_2$

The following table outlines the cost of electric power production necessary for a 12% internal rate of return (IRR) for the Rankine steam cycle and combined Rankine/Brayton cycle.

Table ES 1. Electric power production economic results summary for a 12% IRR.

| Technology | Electricity Price (¢/kWe-hr) |
|---|---|
| Rankine Steam Cycle | 9.57 |
| Combined Rankine/Brayton Cycle | 8.46 |
| **Average U.S. Retail Prices (November 2009)[4]** | |
| Residential | 11.33 |
| Commercial | 9.82 |
| Industrial | 6.44 |

## CONTENTS

EXECUTIVE SUMMARY ..... 3

1. INTRODUCTION ..... 7

2. MODELING OVERVIEW ..... 8

   2.1 General Considerations ..... 8

   2.2 Rankine Steam Cycle ..... 10

   2.3 Brayton Gas Cycle ..... 12

   2.4 Combined Brayton/Rankine Cycle ..... 16

3. MODELING RESULTS ..... 16

   3.1 General Results ..... 16

   3.2 Rankine Cycle Results ..... 19

   3.3 Brayton Cycle ..... 21

   3.4 Combined Brayton/Rankine Cycle ..... 21

   3.5 Other Power Conversion Work ..... 21

4. ECONOMIC MODELING ..... 22

   4.1 Capital Cost Estimation ..... 23

   4.2 Estimation of Revenue ..... 32

   4.1 Estimation of Manufacturing Costs ..... 32

   4.2 Economic Comparison ..... 33

      4.2.1 Cash Flow ..... 34
      4.2.2 Internal Rate of Return ..... 35

5. ECONOMIC MODELING RESULTS ..... 36

6. CONCLUSIONS AND RECOMMENDATONS ..... 38

7. REFERENCES ..... 38

8. APPENDIXES ..... 39

Appendix A Power Cycle Process Flow Diagrams ..... 40

Appendix B 600-MWt NGCC Combustion ..... 73

Appendix C 55%-to-45% Debt-to-Equity Ratio Results ..... 76

Appendix D Cost Estimate Support Data Recapitulation ..... 78

# 1. INTRODUCTION

This technical evaluation (TEV) has been prepared as part of a study for the Next Generation Nuclear Plant (NGNP) Project to evaluate integration of high-temperature gas-cooled reactor (HTGR) technology with conventional chemical processes. The NGNP Project is being conducted under U.S. Department of Energy (DOE) direction to meet a national strategic need identified in the *National Energy Policy* to promote reliance on safe, clean, economic nuclear energy and to establish a greenhouse-gas-free technology for the production of hydrogen. The NGNP represents an integration of high-temperature reactor technology with advanced hydrogen, electricity, and process heat production capabilities, thereby meeting the mission need identified by DOE. The strategic goal of the NGNP Project is to broaden the environmental and economic benefits of nuclear energy in the U.S. economy by demonstrating its applicability to market sectors not being served by light water reactors.

An HTGR produces steam, high-temperature helium, or electricity. A summary of these products and a brief description is shown in Table 1. In conventional processes these products are generated by the combustion of fossil fuels such as coal and natural gas, resulting in significant emissions of greenhouse gases such as $CO_2$. Heat or electricity produced in an HTGR could be used to supply process heat or electricity to conventional processes without generating any greenhouse gases. The use of an HTGR to supply process heat or electricity to a conventional process is referred to as a nuclear-integrated process. This report describes how nuclear-generated heat or electricity could be integrated into conventional processes and provides a preliminary economic analysis to show which nuclear-integrated processes compare favorably with conventional processes.

Table 1. Assumed project outputs of an HTGR.

| HTGR Product | Product Description |
|---|---|
| Steam | 540 to 593°C and 17 to 24 MPa |
| High-Temperature Helium | Up to 700°C and 9.1 MPa |
| Electricity | Generated by Rankine cycle with thermal efficiency of 40% |

The Advanced Process and Decision Systems Department at Idaho National Laboratory (INL) has spent several years developing detailed process simulations of chemical and thermodynamic processes. The processes included power cycles combined with a variety of nuclear reactors. These simulations have been developed using HYSYS Process and ASPEN PLUS—state-of-the-art, steady-state, thermodynamic, and chemical process simulators developed by Hyprotech and ASPEN. This study makes extensive use of these models and the modeling capability at INL to evaluate potential HTGR power cycles.

The purpose of this TEV is to present the results of three potential power conversion systems. These power cycles will be integrated with industrial processes to investigate potential integration possibilities and their economic value. Along with the results from

the power conversion models, an economic exercise was performed on two of the cycles—Rankine steam and a combined Rankine steam/Brayton gas cycle to estimate the cost of power production. The model results of the Rankine power conversion model are integrated with other industrial process applications to estimate the overall economic cost of these processes integrated to a HTGR. The results from these integrations are outlined in other TEVs.

This TEV assumes familiarity with HYSYS Process and APSEN PLUS software, so a detailed explanation of the software capabilities, thermodynamic packages, unit operation models, and solver routines is beyond the scope of this TEV. Also assumed is a familiarity with thermodynamic, heat exchange, and heat recuperation systems; hence, a thorough explanation of these technologies is also considered to be beyond the scope of this TEV.

For the nuclear-integrated cases, the estimates of capital costs and operating and maintenance costs assumed the nuclear plant was an "$n^{th}$ of a kind", (NOAK). In other words, the estimates were based on the costs expected after the HTGR technology is integrated into an industrial application more than 10 times. The economic modeling calculations were based on two capital cost scenarios: a current best estimate of $2,000/kWt *["INL/BEA Pre-Conceptual Design Report name"]* and a target of $1,400/$kW_{th}$ *[personal communications with Larry Demick]* where $kW_{th}$ is the thermal rating of the plant. In comparison, light water nuclear reactor costs are approximately $1,250/$kW_{th}$. Based on the two capital cost scenarios for HTGR technology, the nominal capital cost for a 600 $MW_{th}$ HTGR would be $1.2 billion; the target capital cost would be $840 million.

# 2. MODELING OVERVIEW

## 2.1 General Considerations

This section describes several power cycles that are used to generate electricity. The major difference between nuclear and non-nuclear power cycles is the heat source. For conventional plants fossil fuels are the heat source, whereas nuclear fission is the heat source for a nuclear plant. A secondary difference is the type of cycle. Some fossil fuel power cycles are open cycles in which the reacted gases are exhausted to the atmosphere. Nuclear power cycles are closed cycles.

One of the primary functions of a nuclear reactor is to produce electricity. A power cycle generally consists of four stages: (1) heat addition, (2) power generation through expansion, (3) heat rejection, and (4) compression. When the working fluid of the power cycle directly cools the core of the nuclear plant, it is called a direct cycle. If the working fluid of the power cycle and the primary cooling loop of the reactor core are separate, it is called an indirect cycle. In an indirect cycle, heat from the core is provided to the power cycle by means of a

steam generator or intermediate heat exchanger (IHX). Direct power cycles can provide more electrical power from heat generated by the core, but the power cycle components are contaminated with radioactive materials.

Optimal thermodynamic performance of a cycle is measured by its thermal efficiency. The thermal efficiency is defined as the electrical power output divided by the heat input, or:

$$\eta_{th} = \frac{\dot{W}_{elec}}{\dot{Q}_{in}} \tag{1}$$

A power cycle is thus based on the thermodynamic concept of a heat engine. Power may be produced from a heat engine that is placed between a high-temperature source and a low-temperature sink as shown in Figure 1. The work of the heat engine is defined as:

$$\dot{W} = \dot{Q}_H - \dot{Q}_L \tag{2}$$

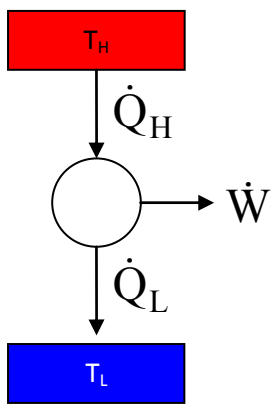


Figure 1. Heat engine between hot source and cold sink.

Heat is transferred from the high-temperature source to the heat engine and heat is rejected from the heat engine to the low temperature sink. The thermal efficiency of a heat engine can be shown as:

$$\eta_{th} = \frac{\dot{Q}_H - \dot{Q}_L}{\dot{Q}_H} \tag{3}$$

In real situations, a temperature difference is needed to transfer the heat from the source to the heat engine and from the heat engine to the heat sink. However, if those differences were made to go to zero, an ideal or maximum efficiency could

be determined. The maximum efficiency is called the Carnot efficiency and is a function of source and sink temperatures only, as in:

$$\eta_{Carnot} = \frac{T_H - T_L}{T_H} \tag{4}$$

In this TEV, three power cycles were analyzed: Rankine steam cycle, Brayton gas cycle, and a combined Rankine/Brayton cycle. The following assumptions were made for all of the cycles analyzed:

- Reactor heat output is 600 MWt
- Outlet temperature of the reactor is 750°C
- Turbines and compressors of the cycles have 90% isentropic efficiencies
- Circulators and pumps have 75% isentropic efficiencies
- IHXs have minimum approach temperatures of 20°C
- Steam generators have minimum approach temperatures of 50°C
- All other heat exchangers in the power cycles have minimum approach temperatures of 10°C
- Pressure drops across the components are 1% of the inlet pressure to the component.

In addition, a more realistic process model was developed for the Rankine model based on a supercritical Rankine steam cycle developed by Babcock and Wilcox.[1] This model uses higher pressure drops throughout the system in particular through the steam generator, turbine efficiencies that are more in line with industry specifications, and turbine seal leakages.

The purpose of these models is to provide a reasonable thermal efficiency for electric production. The models are theoretical and are not developed for actual power cycle design.

## 2.2 Rankine Steam Cycle

The Rankine steam cycle is the most basic thermodynamic power cycle. The simplest cycle consists of a steam generator, a turbine, a condenser, and a pump as shown in Figure 2. The working fluid is water; low-pressure water is pumped to a high pressure. Heat is transferred to the water through a steam generator to produce high-pressure steam. The steam expands through the turbine to produce flow work or power which is converted to electricity in a generator. The low-pressure saturated steam/water is condensed to liquid water in the condenser.

The efficiency for this cycle is defined as the power difference between the turbine and the pump divided by the heat input from the steam generator as in:

$$\eta_{th} = \frac{\dot{W}_{Turbine} - \dot{W}_{Pump}}{\dot{Q}_{Steam\,Generator}} \tag{5}$$

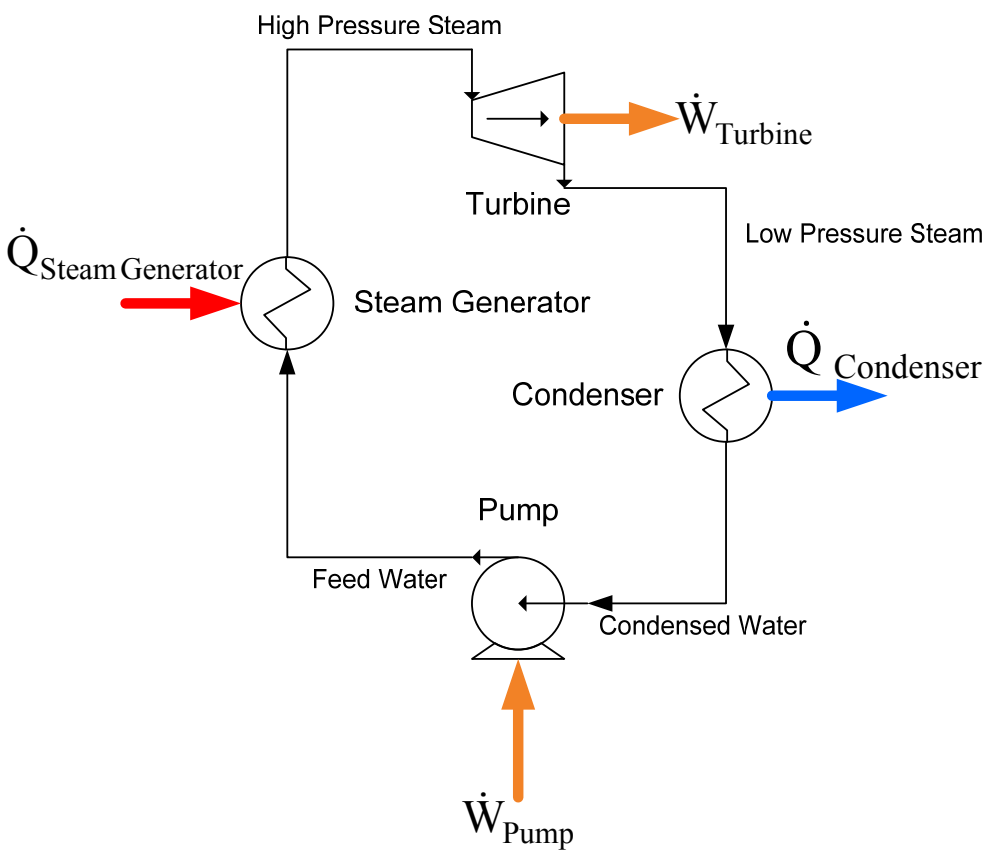


Figure 2. Basic Rankine steam cycle.

The cycle efficiency can be improved through heat recuperation in which partially expanded streams from the turbine exchange heat with the stream exiting the pump or feed water stream using exchangers labeled as feed water heaters. The efficiency can also be improved by reheating the partially expanded stream in the steam generator before it is further expanded in the turbine. Figure 3 shows a Rankine steam cycle with feed water heaters and a set of turbines. The partially expanded streams are split from the primary turbine stream to supply heat to the steam generator's feed water. These streams are mixed with the exit stream of the low-pressure turbine before the condenser. The power cycle is separated from the heat of the reactor through one circulation loop: the primary helium loop. The purpose of the separation is to prevent tritium migration to the components of the power cycle. The thermal efficiency of the Rankine cycle for this work is defined as:

$$\eta_{th} = \frac{\sum \dot{W}_{Turbine} - \sum \dot{W}_{Pumps} - \sum \dot{W}_{Circulator}}{\dot{Q}_{Reactor}} \tag{6}$$

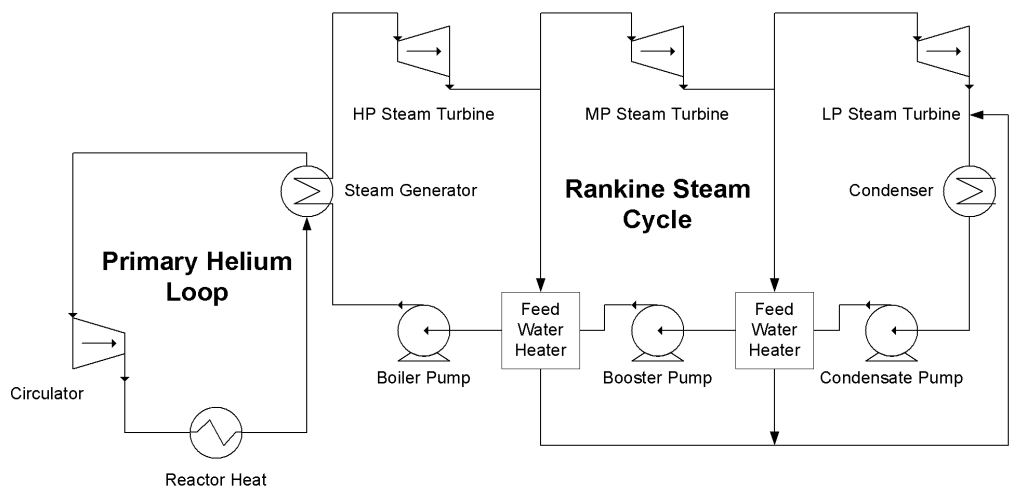


Figure 3. Rankine steam cycle with feed water heaters.

## 2.3 Brayton Gas Cycle

The basic Brayton gas cycle is shown in Figure 4. The high-pressure working gas is expanded in a turbine to produce power. The low-pressure warm gas is cooled in an ambient cooler, which reduces the power of compression. The low-pressure cold gas is compressed to the high-pressure of the system. Often the turbine and

the compressor are mechanically connected through a single shaft. The thermal efficiency of the cycle is presented as:

$$\eta_{th} = \frac{\dot{W}_{Turbine} - \dot{W}_{Compressor}}{\dot{Q}_{Gas\,Heater}} \tag{7}$$

As with the Rankine steam cycle, the thermal efficiency may be improved through partial expansion with reheat and recuperation. For an indirect cycle, the gas heater is the heat from the reactor, and not only is the compression in the Brayton cycle considered, but also the compression of the circulator within the primary loop. Figure 5 shows the cycle analyzed for this report, which includes both reheat and recuperation. The reactor outlet flow is split into two streams, each going to an intermediate heat exchanger (IHX). Both gas turbines have inlet temperatures of 730°C. The thermal efficiency for the Brayton cycle as shown in Figure 5 is:

$$\eta_{th} = \frac{\sum \dot{W}_{Turbines} - \sum \dot{W}_{Pumps} - \sum \dot{W}_{Circulator}}{\dot{Q}_{Reactor}} \tag{8}$$

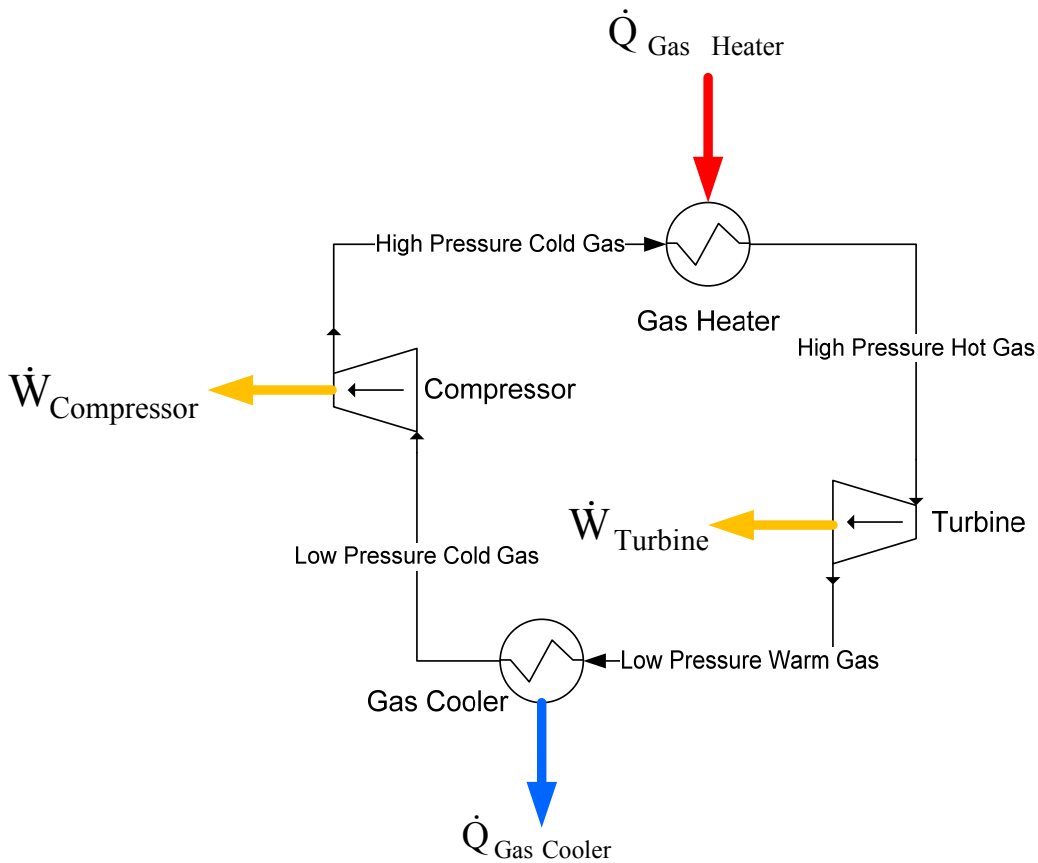


Figure 4. Simple Brayton cycle.

The process model developed for the Brayton cycle predicts that recuperation causes the temperature of the primary loop exiting the IHX to be over 600°C. The process heat available at that temperature is over 400 MWt and the actual heat used for the Brayton cycle is nearly 200 MWt. The 92 MWe generated for the cycle results in a thermal efficiency of 46.7%. This power cycle may be used for heat process applications that can use a 600°C heat source and some electric power. The nature of recuperation requires that all 730°C pass through the power cycle, and only 100 MWe can be produced for the 600 MWt from the reactor.

The compression process is a two-stage process with coolers before each compressor. The high pressure of the working fluid of the Brayton cycle is 7 MPa, the same as the pressure of the primary cooling loop of the reactor. This allows for minimal pressure difference across the IHXs. The working fluid in the cycle is helium, the same as the primary cooling loop for the reactor. The recuperating heat exchanger heats the gas exiting the compressors and cools the gas leaving the turbines. This has a two-fold advantage in that it reduces the amount of cooling needed from the coolers and heat needed before expansion.

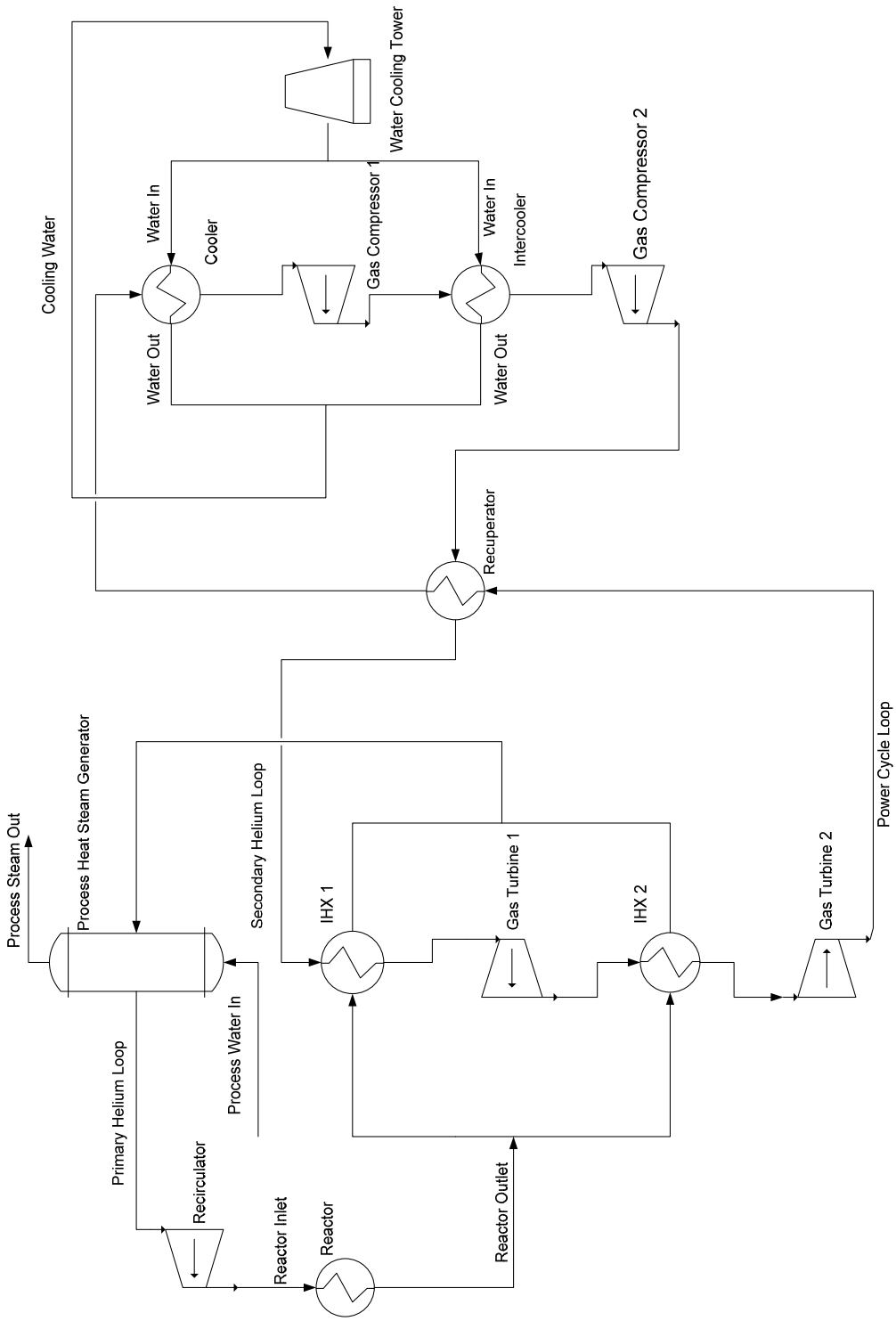


Figure 5. Brayton gas cycle with reheat and recuperation.

### 2.4 Combined Brayton/Rankine Cycle

By observing the Brayton cycle, one can use the rejected process heat for another power cycle. The Rankine cycle discussed above only needs 550°C steam from a steam generator, and the Brayton cycle analyzed above can provide that steam. Figure 6 shows the combined cycle in which the Rankine cycle uses the 400 MWt heat that remains after passing through the Brayton cycle. The advantage of the combined cycle is that all the heat from the reactor may be converted to electricity at a higher thermal efficiency than the Rankine cycle alone, or the fraction of process heat to electricity production may be sized according to need. The pressure and temperature conditions are the same as previously described for each power cycle. The thermal efficiency is found by:

$$\eta_{th} = \frac{\sum \dot{W}_{Turbine} - \sum \dot{W}_{Compressor} - \sum \dot{W}_{Pump} - \sum \dot{W}_{Circulator}}{\dot{Q}_{Re\,actor}} \quad (9)$$

## 3. MODELING RESULTS

### 3.1 General Results

A summary of the power cycle processes is shown in Figure 7, which depicts the use of water and fuel as well as the productions of electricity, process heat, and $CO_2$ for both non-nuclear and nuclear power cycles. A 600 MWt HTGR provides heat for the nuclear-integrated power cycles.

The nuclear power cycles are compared to a natural gas combined cycle (NGCC) power generation process. In this analysis the NGCC produces electricity from 600 MWt produced by the combustion of natural gas. The NGCC produces the most power resulting in less water usage because of the high temperature of the combustion products. The Rankine and combined Brayton/Rankine cycles match well with the NGCC cycle. The other two cycles offer process heat as well as electricity and therefore do not compare directly. The nuclear power cycles have no $CO_2$ emissions. Table 2 is a summary of the power cycles. Diagrams and a detailed description of Rankine and combined Brayton/Rankine cycle models are provided in Appendix A. Diagrams and a simplified description of the combustion model for the NGCC are provided in Appendix B.

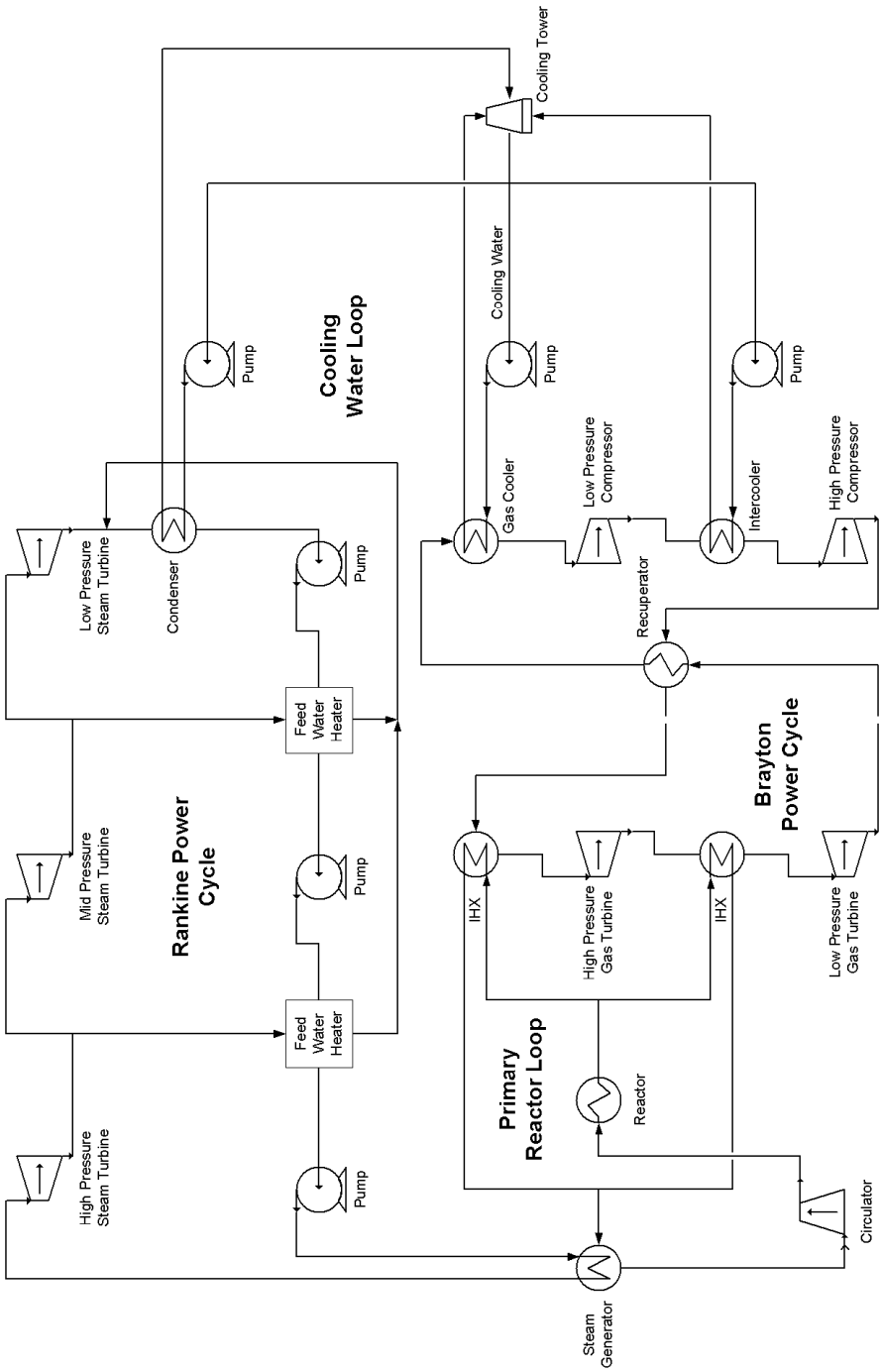


Figure 6. Combined Brayton/Rankine power cycle.

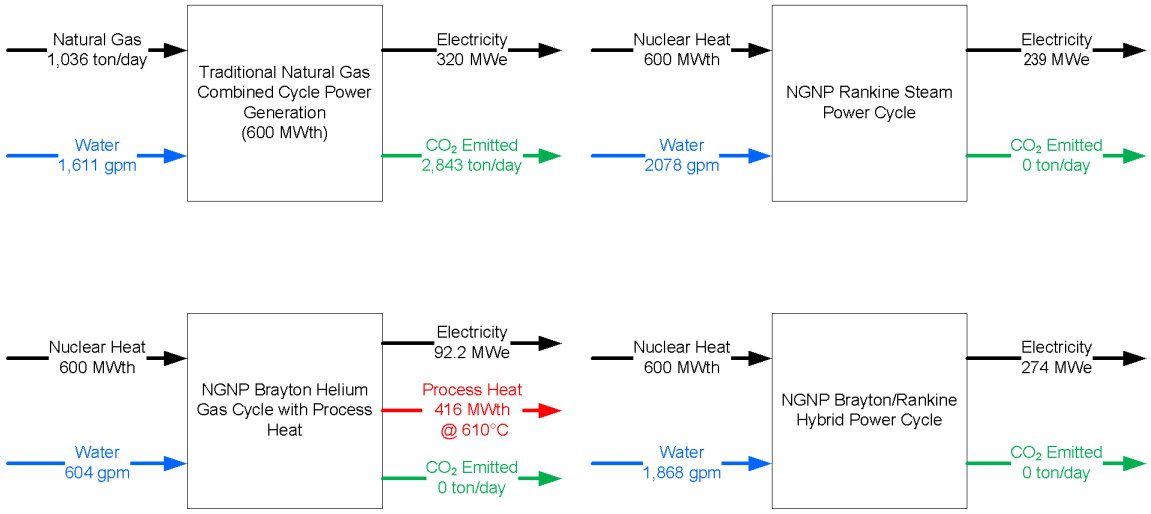


Figure 7. Result summary of nuclear and non-nuclear power cycle process models.

Table 2. Summary of power cycle results.

| | NGCC 100% Electricity | Rankine 100% Electricity | Brayton | Combined Brayton/ Rankine 100% Electricity | Combined Brayton/ Rankine 50% Electricity 50% Process Heat |
|---|---|---|---|---|---|
| **Inputs** | | | | | |
| Natural Gas Feed Rate (ton/day) | 1,036 | 0 | 0 | 0 | 0 |
| #600 MWt HTGRs Required | N/A | 1 | 1 | 1 | 1 |
| **Outputs** | | | | | |
| Electricity (MWe) | 320 | 239.2 | 92 | 274 | 137 |
| Thermal Cycle Efficience | 53.4% | 39.9% | 46.7% | 45.7% | 45.7% |
| Process Heat (MWt) | N/A | N/A | 416 | N/A | 300 |
| Temperature of Process Heat | N/A | N/A | 610°C | N/A | 730°C |
| **Utility Summary** | | | | | |
| Total Power (MW) | 320.4 | 239.2 | 92.2 | 274.3 | 137.2 |
| Turbines | N/A | 257.2 | 191.8 | 357.4 | 178.7 |
| Compressors | N/A | N/A | -94.6 | -62.0 | -31.0 |
| Pumps | N/A | -10.5 | N/A | -6.1 | -3.1 |
| Circulators | N/A | -5.8 | -4.41 | -13.4 | -6.7 |
| Cooling Towers | N/A | -1.6 | -0.5 | -1.5 | -0.7 |
| Total Water (gpm) | -1,611 | -2,078 | -604 | -1,868 | -934 |
| **$CO_2$ Emissions** | | | | | |
| Emitted (ton/day $CO_2$) | 2,843 | 0 | 0 | 0 | 0 |

### 3.2 Rankine Cycle Results

A Rankine steam cycle with seven feed water heaters was the process selected for this work. As shown in Figure 8, there are three turbines (high, mid-range, and low pressure), and seven feed water heaters for heat recuperation. Feed Water Heater 4 is an open heater that exchanges its heat by mixing, thus allowing for aeration of the working fluid. Between each stage of expansion, some of the flow is used for the feed water heaters along with the turbines. At the outlet of the high-pressure turbine, the stream is reheated in the steam generator. This model is based on a Rankine cycle design found in Reference 1.

As shown in Table 2 above, the cycle generates 239 MWe from 600 MWt reactor heat, resulting in a thermal process efficiency of 39.9%. The helium loops are at a pressure of 7 MPa with 50°C temperature differences across the IHX and across the steam generator. Because of material constraints on the steam generator, the temperature of the steam exiting the steam generator and entering the high-pressure turbine is 514°C with a pressure of 24 MPa. Details of the process model are found with the process flow diagrams in Appendix A.

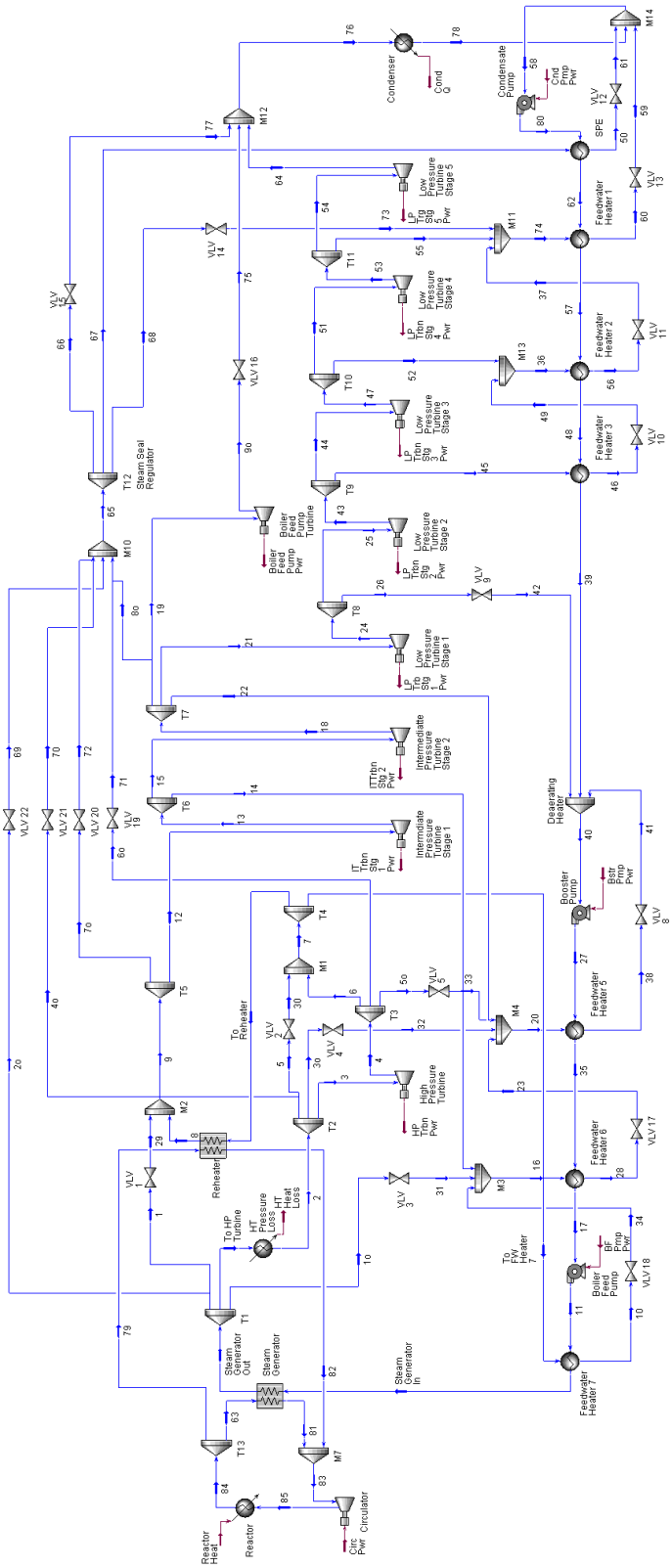


Figure 8. Process flow diagram of Rankine steam power cycle.

## 3.3 Brayton Cycle

Table 3 gives the results of a parametric study of the effects of reheat and recuperation. One also must consider that this cycle must reject 400 MWt of heat at 600°C for the cycle to obtain a net thermal efficiency of 46.7%.

Table 3. A comparison of Brayton cycles.

| | Reheat from Gas Heater | Recuperation | Thermal Efficiency ($\eta_{th}$) |
|---|---|---|---|
| Simple Brayton cycle | No | No | 28.2% |
| Brayton with recuperation | No | Yes | 33.8% |
| Brayton with recuperation and reheat | Yes | Yes | 46.7% |
| Carnot | NA | NA | 71.8% |
| 66% of Carnot | NA | NA | 44.4% |

## 3.4 Combined Brayton/Rankine Cycle

The electricity generated in this cycle for a 600 MWt reactor is 274 MWe resulting in a thermal efficiency of 45.7%. A final case was considered in which 50% of the reactor heat is used to make electricity and 50% is used for process heat. The combined cycle connected to a HTGR produces 137 MWe of electricity and 300 MWt of process heat at 730°C if only 50% of the heat is used to generate electricity.

## 3.5 Other Power Conversion Work

Westinghouse and AREVA performed a power conversion trade study in which the risks of a variety of power conversion systems were considered.[2,4] Both used a HTGR with an outlet reactor temperature of 900°C. Rankine steam cycles, Brayton gas cycles, combined cycles (CCGT), and supercritical $CO_2$ cycles (SSCO2), were considered. Also direct and indirect versions of these cycles were analyzed. Cycle efficiencies ranged from 38% to 50%. Table 4 is a summary of the results.

General Atomics found at reactor outlet temperature of 850°C that an indirect combined cycle had a cycle efficiencies of 48.6% compared to an indirect Rankine cycle efficiency of 42.6%.[3] Mitsubishi Heavy Industries did a detailed performance assessment on the direct sub-critical steam cycle for a 750°C reactor outlet temperature. They found that net plant efficiency is 44.3%.[4]

The power cycles developed for this report have cycle efficiencies that compare to General Atomics, AREVA, Westinghouse, and Mitsubishi.

Table 4. Power conversion cycle efficiencies study results by Westinghouse and AREVA.[2,4]

| Power Conversion Cycle | | | Cycle Efficiency | |
|---|---|---|---|---|
| | | | AREVA | Westinghouse |
| **Brayton** | Direct | | 47.6% | 42.3% |
| | Indirect | | 44.5% | 38.3% |
| **CCGT** | Direct | | | 45.1% |
| | Indirect | | 47.9% | 43.1% |
| **Rankine** | Direct | Supercritical | 46.9% | |
| | | Subcritical | 42.8% | 41.2% |
| | Indirect | | 39.8% | 39.2% |
| **SSCO2** | | | 47.4% | |
| | | Cascaded | 49.8% | |

# 4. ECONOMIC MODELING

The economic viability of the electric power generation process was assessed using standard economic evaluation methods. The economics were evaluated for a Rankine steam cycle combined with a HTGR and a combined Rankine/Brayton process. The total capital investment (TCI), based on the total equipment costs, along with the variable and fixed operating costs were first calculated for each case. The present worth of the annual cash flows (after taxes) is then calculated for the TCI, as well as the TCI at +50% and -30% of the HTGR cost, with the debt-to-equity ratios of 80% to 20%. The following sections describe the methods used to calculate the capital costs, fixed and variable operating costs, and the methods used for the economic assessments. All calculations assume the full usage of a 600 MWt reactor for dedicated power production.

The Association for the Advancement of Cost Engineering (AACE) International recognizes five classes of estimates. The level of project definition for this study was determined to be an AACE International Class 5 Estimate. Though, the baseline case is actually more in line with the AACE International Class 4 Estimate, which is associated with equipment factoring, parametric modeling, historical relationship factors, and broad unit cost data, the HTGR project definition falls under an AACE International Class 5 Estimate, associated with less than 2 percent project definition, and based on preliminary design methodology. Since the HTGR is a larger portion of the total capital investment, an overall Class 5 Estimate was assumed. Based on the AACE International contingency guidelines as presented in DOE/FETC-99/1100 it would appear that the overall project contingency for the non nuclear portion of the capital should be in the range of 30 to 50 percent, 30 to 40 percent for Class 4 and 50% for Class 5. However, because the cost estimates were scaled based on estimated, quoted, and actual project costs, the overall non-nuclear project contingency should be more in the range of 15 to 20 percent. 18% was selected based on DOE/NETL-2007/1281.

## 4.1 Capital Cost Estimation

The capital costs and operation and maintenance information is based on the DOE National Energy Technology Laboratory (NETL) report, *Cost and Performance Baseline for Fossil Energy Plants*.[5] It was assumed that the power cycles developed for these plants would be similar to the power cycles developed for a high-temperature gas-cooled reactor (HTGR). The costs from this report are 2006 dollars. The analysis is performed using 2009 dollars; therefore, the Chemical Engineering Plant Cost Index (CEPCI) was used to adjust the costs to 2009 dollars.

The cycles analyzed for this economic report are the Rankine Steam cycle and the combined Brayton/Rankine cycle. The Rankine information is found in Case 11 of Reference 5, where a pulverized coal system is combined with a supercritical Rankine power cycle without $CO_2$ capture. The combined Rankine/Brayton cycle information is from the integrated gasification combined cycle (IGCC) cases where power is derived from a high-temperature gas turbine and a bottoming Rankine steam cycle. The combined Rankine/Brayton cycle in this report has a closed Brayton cycle for the high-temperature section and the IGCC cases from the NETL have an open gas turbine. In this report, the differences were considered negligible because the higher temperature cost aspect of the IGCC turbine is assumed to be close to the addition of compressors for the closed Brayton cycle. The equipment costs found in the report are based on 2006 dollars, so the CEPCI was used to bring those costs to 2009 dollars. Also, the installed capital costs of the power cycles were scaled with a six-tenths ratio by the electrical power output capacity that would be expected from a 600 MWt HTGR. Tables 5 through 8 show the equipment costs for the Rankine and combined cycles.

Table 9 shows the 2009 costs and the cost of the power cycles scaled to a 600 MWt reactor. The Rankine costs show that the steam generator is about half the cost of the power cycle because the steam generator in a pulverized coal plant must handle a dirtier combustion gas. Although the costs include a steam generator, only the costs of the cycles without the steam generator will be considered when analyzing the overall cost of combining an industrial process with a reactor. In those analyses, the steam generator will be included in the cost of the nuclear reactor. With that in mind, the installed capital cost of a Rankine power cycle connected to a dedicated 600 MWt HTGR is $148,362,000. The installed capital cost of the combined Rankine/Brayton power cycle is $160,267,000.

Table 5. 2006 capital costs for Rankine steam cycle.[5]

| Supercritical Pulverized Coal (PC) w/o $CO_2$ Capture<br>Plant Size (MWe) | 550<br>Equipment Cost | Thermal Efficiency<br>Material Cost | Labor Direct | 39.1%<br>Bare Erected Cost |
|---|---|---|---|---|
| **FEEDWATER & MISC. BOP SYSTEMS** | | | | |
| Feedwater System | $17,490,000 | $- | $5,725,000 | $23,215,000 |
| Water Makeup and Pretreating | $4,278,000 | $- | $1,376,000 | $5,654,000 |
| Other Feedwater Subsystems | $5,404,000 | $- | $2,293,000 | $7,697,000 |
| Service Water Systems | $844,000 | $- | $456,000 | $1,300,000 |
| Other Boiler Plant Systems | $6,403,000 | $- | $6,264,000 | $12,667,000 |
| **PC BOILER** | | | | |
| PC Boiler & Accessories | $148,766,000 | $- | $83,888,000 | $232,654,000 |
| **STEAM TURBINE GENERATOR** | | | | |
| Steam TG & Accessories | $48,728,000 | $- | $6,532,000 | $55,260,000 |
| Turbine Plant Auxiliaries | $334,000 | $- | $716,000 | $1,050,000 |
| Condenser & Auxiliaries | $6,405,000 | $- | $2,204,000 | $8,609,000 |
| Steam Piping | $16,354,000 | $- | $8,078,000 | $24,432,000 |
| TG Foundations | $- | $1,042,000 | $1,658,000 | $2,700,000 |
| **COOLING WATER SYSTEM** | | | | |
| Cooling Towers | $8,669,000 | $- | $2,702,000 | $11,371,000 |
| Circulating Water Pumps | $1,765,000 | $- | $111,000 | $1,876,000 |
| Circ. Water System Auxiliaries | $515,000 | $- | $69,000 | $584,000 |
| Circ Water Piping | $- | $4,150,000 | $3,958,000 | $8,108,000 |
| Make-up Water System | $457,000 | $- | $605,000 | $1,062,000 |
| Component Cooling Water Sys | $411,000 | $- | $324,000 | $735,000 |
| Circ. Water System Foundations & Structures | $- | $2,403,000 | $3,844,000 | $6,247,000 |
| **ACCESSORY ELECTRIC PLANT** | | | | |
| Generator Equipment | $1,524,000 | $- | $249,000 | $1,773,000 |
| Station Service Equipment | $2,578,000 | $- | $882,000 | $3,460,000 |
| Switchgear & Motor Control | $3,063,000 | $- | $525,000 | $3,588,000 |
| Conduit & Cable Tray | $- | $1,967,000 | $6,693,000 | $8,660,000 |
| Wire & Cable | $- | $3,568,000 | $7,051,000 | $10,619,000 |
| Protective Equipment | $243,000 | $- | $861,000 | $1,104,000 |
| Standby Equipment | $1,176,000 | $- | $28,000 | $1,204,000 |
| Main Power Transformers | $6,950,000 | $- | $165,000 | $7,115,000 |
| Electrical Foundations | $- | $297,000 | $735,000 | $1,032,000 |
| **INSTRUMENT AND CONTROL** | | | | |
| Control Boards, Panels & Racks | $413,000 | $- | $258,000 | $671,000 |
| Computer & Accessories | $4,172,000 | $- | $760,000 | $4,932,000 |
| Instrument Wiring & Tubing | $2,305,000 | $- | $4,674,000 | $6,979,000 |
| Other I & C Equipment | $1,179,000 | $- | $2,787,000 | $3,966,000 |
| **BUILDING & STRUCTURES** | | | | |
| Boiler Building | $- | $7,843,000 | $6,990,000 | $14,833,000 |
| Turbine Building | $- | $11,220,000 | $10,597,000 | $21,817,000 |
| Circulation Water Pumphouse | $- | $159,000 | $128,000 | $287,000 |
| Water Treatment Buildings | $- | $565,000 | $471,000 | $1,036,000 |
| **TOTAL COST** | | | | |
| With Steam Generator | **$290,426,000** | **$33,214,000** | **$174,657,000** | **$498,297,000** |
| Without Steam Generator | **$135,257,000** | **$25,371,000** | **$77,515,000** | **$238,143,000** |

Table 6. 2006 capital costs for IGCC Case 1.[5]

| IGCC w/o $CO_2$ Capture GEE ™ Radiant Only | | | | |
|---|---|---|---|---|
| Plant Size (MWe) | 640 | | | |
| Thermal Efficiency | 38.2% | | | |
| | Equipment Cost | Material Cost | Labor Direct | Bare Erected Cost |
| **FEEDWATER & MISC. BOP SYSTEMS** | | | | |
| Feedwater System | $3,484,000 | $6,058,000 | $3,201,000 | $12,743,000 |
| Water Makeup and Pretreating | $532,000 | $55,000 | $297,000 | $884,000 |
| Other Feedwater Subsystems | $1,924,000 | $652,000 | $587,000 | $3,163,000 |
| Service Water Systems | $306,000 | $625,000 | $2,172,000 | $3,103,000 |
| Other Boiler Plant Systems | $1,646,000 | $632,000 | $1,567,000 | $3,845,000 |
| **COMBUSTION TURBINE/ACCESSORIES** | | | | |
| Combustion Turbine Generator | $82,000,000 | $- | $5,071,000 | $87,071,000 |
| Syngas Expander | $5,440,000 | $- | $760,000 | $6,200,000 |
| Combustion Turbine Foundations | $- | $752,000 | $838,000 | $1,590,000 |
| **HRSG, DUCTING & STACK** | | | | |
| Heat Recovery Steam Generator | $34,012,000 | $- | $4,840,000 | $38,852,000 |
| Ductwork | $- | $1,579,000 | $1,144,000 | $2,723,000 |
| Stack | $3,127,000 | $- | $1,175,000 | $4,302,000 |
| HRSG, Ducting & Stack Foundations | $- | $622,000 | $602,000 | $1,224,000 |
| **STEAM TURBINE GENERATOR** | | | | |
| Steam TG & Accessories | $29,570,000 | $- | $5,065,000 | $34,635,000 |
| Turbine Plant Auxiliaries | $204,000 | $- | $467,000 | $671,000 |
| Condenser & Auxiliaries | $5,181,000 | $- | $1,496,000 | $6,677,000 |
| Steam Piping | $5,510,000 | $- | $3,883,000 | $9,393,000 |
| TG Foundations | $- | $1,003,000 | $1,707,000 | $2,710,000 |
| **COOLING WATER SYSTEM** | | | | |
| Cooling Towers | $4,704,000 | $- | $1,034,000 | $5,738,000 |
| Circulating Water Pumps | $1,481,000 | $- | $95,000 | $1,576,000 |
| Circ. Water System Auxiliaries | $122,000 | $- | $17,000 | $139,000 |
| Circ. Water Piping | $- | $5,160,000 | $1,316,000 | $6,476,000 |
| Make-up Water System | $299,000 | $- | $424,000 | $723,000 |
| Component Cooling Water Sys | $594,000 | $711,000 | $502,000 | $1,807,000 |
| Circ. Water System Foundations & Structures | $- | $1,785,000 | $3,057,000 | $4,842,000 |
| **ACCESSORY ELECTRIC PLANT** | | | | |
| Generator Equipment | $921,000 | $- | $918,000 | $1,839,000 |
| Station Service Equipment | $3,646,000 | $- | $342,000 | $3,988,000 |
| Switchgear & Motor Control | $6,967,000 | $- | $1,277,000 | $8,244,000 |
| Conduit & Cable Tray | $- | $3,315,000 | $10,762,000 | $14,077,000 |
| Wire & Cable | $- | $6,088,000 | $4,095,000 | $10,183,000 |
| Protective Equipment | $- | $640,000 | $2,427,000 | $3,067,000 |
| Standby Equipment | $218,000 | $- | $222,000 | $440,000 |
| Main Power Transformers | $11,408,000 | $- | $142,000 | $11,550,000 |
| Electrical Foundations | $- | $153,000 | $404,000 | $557,000 |

Table 6. (continued).

| IGCC w/o $CO_2$ Capture GEE ™ Radiant Only | | | | |
|---|---|---|---|---|
| Plant Size (MWe) | 640 | | | |
| Thermal Efficiency | 38.2% | | | |
| | Equipment Cost | Material Cost | Labor Direct | Bare Erected Cost |
| **INSTRUMENT AND CONTROL** | | | | |
| Other Major Component Control | $932,000 | $- | $648,000 | $1,580,000 |
| Control Boards, Panels & Racks | $214,000 | $- | $143,000 | $357,000 |
| Computer & Accessories | $4,969,000 | $- | $166,000 | $5,135,000 |
| Instrument Wiring & Tubing | $- | $1,767,000 | $3,697,000 | $5,464,000 |
| Other I & C Equipment | $3,322,000 | $- | $1,681,000 | $5,003,000 |
| **BUILDINGS & STRUCTURES** | | | | |
| Combustion Turbine Area | $- | $221,000 | $127,000 | $348,000 |
| Steam Turbine Building | $- | $2,410,000 | $3,479,000 | $5,889,000 |
| Circulation Water Pumphouse | $- | $158,000 | $85,000 | $243,000 |
| Water Treatment Building | $- | $423,000 | $418,000 | $841,000 |
| **TOTAL COST** | | | | |
| With Steam Generator | **$212,733,000** | **$34,809,000** | **$72,350,000** | **$319,892,000** |
| Without Steam Generator | **$173,948,000** | **$31,976,000** | **$63,022,000** | **$268,946,000** |

Table 7. 2006 capital costs for IGCC Case 2.[5]

| IGCC w/o $CO_2$ Capture Conoco IPhillips E-Gas | | | | |
|---|---|---|---|---|
| Plant Size (MWe) | 623 | | | |
| Thermal Efficiency | 39% | | | |
| | Equipment Cost | Material Cost | Labor Direct | Bare Erected Cost |
| **FEEDWATER & MISC. BOP SYSTEMS** | | | | |
| Feedwater System | $3,088,000 | $5,369,000 | $2,836,000 | $11,293,000 |
| Water Makeup and Pretreating | $502,000 | $52,000 | $280,000 | $834,000 |
| Other Feedwater Subsystems | $1,705,000 | $578,000 | $521,000 | $2,804,000 |
| Service Water Systems | $289,000 | $590,000 | $2,049,000 | $2,928,000 |
| Other Boiler Plant Systems | $1,553,000 | $596,000 | $1,478,000 | $3,627,000 |
| **COMBUSTION TURBINE/ACCESSORIES** | | | | |
| Combustion Turbine Generator | $82,000,000 | $- | $5,071,000 | $87,071,000 |
| Syngas Expander | $- | $- | $- | $- |
| Combustion Turbine Foundations | $- | $684,000 | $762,000 | $1,446,000 |
| **HRSG, DUCTING & STACK** | | | | |
| Heat Recovery Steam Generator | $33,926,000 | $- | $4,828,000 | $38,754,000 |
| Ductwork | $- | $1,577,000 | $1,143,000 | $2,720,000 |
| Stack | $3,123,000 | $- | $1,174,000 | $4,297,000 |
| HRSG, Ducting & Stack Foundations | $- | $622,000 | $601,000 | $1,223,000 |
| **STEAM TURBINE GENERATOR** | | | | |
| Steam TG & Accessories | $28,109,000 | $- | $4,930,000 | $33,039,000 |
| Turbine Plant Auxiliaries | $198,000 | $- | $455,000 | $653,000 |
| Condenser & Auxiliaries | $4,660,000 | $- | $1,421,000 | $6,081,000 |
| Steam Piping | $5,233,000 | $- | $3,687,000 | $8,920,000 |
| TG Foundations | $- | $953,000 | $1,621,000 | $2,574,000 |

Table 7. (continued).

| IGCC w/o $CO_2$ Capture Conoco IPhillips E-Gas | | | | |
|---|---|---|---|---|
| Plant Size (MWe) | 623 | | | |
| Thermal Efficiency | 39% | | | |
| | Equipment Cost | Material Cost | Labor Direct | Bare Erected Cost |
| **COOLING WATER SYSTEM** | | | | |
| Cooling Towers | $4,397,000 | $- | $967,000 | $5,364,000 |
| Circulating Water Pumps | $1,383,000 | $- | $86,000 | $1,469,000 |
| Circ. Water System Auxiliaries | $116,000 | $- | $17,000 | $133,000 |
| Circ. Water Piping | $- | $4,910,000 | $1,253,000 | $6,163,000 |
| Make-up Water System | $284,000 | $- | $403,000 | $687,000 |
| Component Cooling Water Sys | $579,000 | $693,000 | $490,000 | $1,762,000 |
| Circ. Water System Foundations & Structures | $- | $1,699,000 | $2,909,000 | $4,608,000 |
| **ACCESSORY ELECTRIC PLANT** | | | | |
| Generator Equipment | $901,000 | $- | $899,000 | $1,800,000 |
| Station Service Equipment | $3,498,000 | $- | $328,000 | $3,826,000 |
| Switchgear & Motor Control | $6,686,000 | $- | $1,226,000 | $7,912,000 |
| Conduit & Cable Tray | $- | $3,181,000 | $10,327,000 | $13,508,000 |
| Wire & Cable | $- | $5,842,000 | $3,930,000 | $9,772,000 |
| Protective Equipment | $- | $624,000 | $2,365,000 | $2,989,000 |
| Standby Equipment | $215,000 | $- | $218,000 | $433,000 |
| Main Power Transformers | $11,308,000 | $- | $138,000 | $11,446,000 |
| Electrical Foundations | $- | $149,000 | $394,000 | $543,000 |
| **INSTRUMENT AND CONTROL** | | | | |
| Other Major Component Control | $924,000 | $- | $643,000 | $1,567,000 |
| Control Boards, Panels & Racks | $212,000 | $- | $142,000 | $354,000 |
| Computer & Accessories | $4,928,000 | $- | $164,000 | $5,092,000 |
| Instrument Wiring & Tubing | $- | $1,752,000 | $3,666,000 | $5,418,000 |
| Other I & C Equipment | $3,294,000 | $- | $1,666,000 | $4,960,000 |
| **BUILDINGS & STRUCTURES** | | | | |
| Combustion Turbine Area | $- | $221,000 | $127,000 | $348,000 |
| Steam Turbine Building | $- | $2,309,000 | $3,334,000 | $5,643,000 |
| Circulation Water Pumphouse | $- | $156,000 | $84,000 | $240,000 |
| Water Treatment Building | $- | $399,000 | $395,000 | $794,000 |
| **TOTAL COST** | | | | |
| With Steam Generator | **$203,111,000** | **$32,956,000** | **$69,028,000** | **$305,095,000** |
| Without Steam Generator | **$164,509,000** | **$30,161,000** | **$59,804,000** | **$254,474,000** |

Table 8. 2006 capital costs for IGCC Case 3.[5]

| IGCC w/o $CO_2$ Capture Shell™ | | | | |
|---|---|---|---|---|
| Plant Size (MWe) | 636 | | | |
| Thermal Efficiency | 41% | | | |
| | Equipment Cost | Material Cost | Labor Direct | Bare Erected Cost |
| **FEEDWATER & MISC. BOP SYSTEMS** | | | | |
| Feedwater System | $3,370,000 | $5,859,000 | $3,095,000 | $12,324,000 |
| Water Makeup and Pretreating | $505,000 | $53,000 | $282,000 | $840,000 |
| Other Feedwater Subsystems | $1,861,000 | $631,000 | $568,000 | $3,060,000 |
| Service Water Systems | $291,000 | $594,000 | $2,063,000 | $2,948,000 |
| Other Boiler Plant Systems | $1,563,000 | $600,000 | $1,487,000 | $3,650,000 |
| **COMBUSTION TURBINE/ACCESSORIES** | | | | |
| Combustion Turbine Generator | $82,000,000 | $- | $5,071,000 | $87,071,000 |
| Syngas Expander | $- | $- | $- | $- |
| Combustion Turbine Foundations | $- | $684,000 | $762,000 | $1,446,000 |
| **HRSG, DUCTING & STACK** | | | | |
| Heat Recovery Steam Generator | $34,073,000 | $- | $4,848,000 | $38,921,000 |
| Ductwork | $- | $1,603,000 | $1,191,000 | $2,794,000 |
| Stack | $3,174,000 | $- | $1,193,000 | $4,367,000 |
| HRSG, Ducting & Stack Foundations | $- | $632,000 | $611,000 | $1,243,000 |
| **STEAM TURBINE GENERATOR** | | | | |
| Steam TG & Accessories | $28,510,000 | $- | $4,862,000 | $33,372,000 |
| Turbine Plant Auxiliaries | $196,000 | $- | $450,000 | $646,000 |
| Condenser & Auxiliaries | $4,511,000 | $- | $1,442,000 | $5,953,000 |
| Steam Piping | $5,308,000 | $- | $3,741,000 | $9,049,000 |
| TG Foundations | $- | $966,000 | $1,645,000 | $2,611,000 |
| **COOLING WATER SYSTEM** | | | | |
| Cooling Towers | $4,206,000 | $- | $924,000 | $5,130,000 |
| Circulating Water Pumps | $1,317,000 | $- | $79,000 | $1,396,000 |
| Circ. Water System Auxiliaries | $117,000 | $- | $17,000 | $134,000 |
| Circ. Water Piping | $- | $4,978,000 | $1,270,000 | $6,248,000 |
| Make-up Water System | $288,000 | $- | $409,000 | $697,000 |
| Component Cooling Water Sys | $582,000 | $697,000 | $492,000 | $1,771,000 |
| Circ. Water System Foundations & Structures | $- | $1,723,000 | $2,949,000 | $4,672,000 |
| **ACCESSORY ELECTRIC PLANT** | | | | |
| Generator Equipment | $905,000 | $- | $902,000 | $1,807,000 |
| Station Service Equipment | $3,411,000 | $- | $320,000 | $3,731,000 |
| Switchgear & Motor Control | $6,519,000 | $- | $1,195,000 | $7,714,000 |
| Conduit & Cable Tray | $- | $310,000 | $10,070,000 | $10,380,000 |
| Wire & Cable | $- | $5,697,000 | $3,832,000 | $9,529,000 |
| Protective Equipment | $- | $627,000 | $2,378,000 | $3,005,000 |
| Standby Equipment | $215,000 | $- | $219,000 | $434,000 |
| Main Power Transformers | $10,280,000 | $- | $139,000 | $10,419,000 |

Table 8. (continued).

| IGCC w/o $CO_2$ Capture Shell™ | | | | |
|---|---|---|---|---|
| **Plant Size (MWe)** | **636** | | | |
| **Thermal Efficiency** | **41%** | | | |
| | **Equipment Cost** | **Material Cost** | **Labor Direct** | **Bare Erected Cost** |
| Electrical Foundations | $- | $150,000 | $396,000 | $546,000 |
| **INSTRUMENT AND CONTROL** | | | | |
| Other Major Component Control | $932,000 | $- | $649,000 | $1,581,000 |
| Control Boards, Panels & Racks | $214,000 | $- | $143,000 | $357,000 |
| Computer & Accessories | $4,973,000 | $- | $166,000 | $5,139,000 |
| Instrument Wiring & Tubing | $- | $1,768,000 | $3,700,000 | $5,468,000 |
| Other I & C Equipment | $3,324,000 | $- | $1,682,000 | $5,006,000 |
| **BUILDINGS & STRUCTURES** | | | | |
| Combustion Turbine Area | $- | $221,000 | $127,000 | $348,000 |
| Steam Turbine Building | $- | $2,337,000 | $3,373,000 | $5,710,000 |
| Circulation Water Pumphouse | $- | $157,000 | $84,000 | $241,000 |
| Water Treatment Building | $- | $402,000 | $398,000 | $800,000 |
| **TOTAL COST** | | | | |
| With Steam Generator | **$202,645,000** | **$30,689,000** | **$69,224,000** | **$302,558,000** |
| Without Steam Generator | **$163,835,000** | **$27,854,000** | **$59,894,000** | **$251,583,000** |

Table 9. Installed capital costs of power cycles adjusted total cost to 2009 dollars and scaled to 600 MWt HTGR.

| Cycle | Total Cost (2009 $) | Thermal Efficiency | Power Output (kWe) |
|---|---|---|---|
| **Rankine Cycle** | | | |
| PC w/o $CO_2$ Capture Super Critical Rankine Cycle | | 39.1% | 550 |
| with Steam Generator | $510,664,000 | | |
| without Steam Generator | $244,053,675 | | |
| Super Critical Rankine Cycle Scaled to 600 MWt HTGR | | **40%** | **240** |
| with Steam Generator | **$310,437,286** | | |
| without Steam Generator | **$148,362,255** | | |
| **Combined Rankine/Brayton Cycle** | | | |
| Case 1: IGCC w/o $CO_2$ Capture GEE™ Radiant Only | | 38.2% | 640 |
| with Steam Generator | $327,831,673 | | |
| without Steam Generator | $275,621,201 | | |
| Case 1: Combined Rankine/Brayton Power Cycle Scaled to 600 MWt HTGR | | 45.7% | 274 |
| with Steam Generator | $197,149,483 | | |
| without Steam Generator | $165,751,456 | | |
| Case 2: IGCC w/o $CO_2$ Capture Conoco Phillips E-Gas™ | | 39.3% | 623 |
| with Steam Generator | $312,667,414 | | |
| without Steam Generator | $260,790,008 | | |

| Cycle | Total Cost (2009 $) | Thermal Efficiency | Power Output (kWe) |
|---|---|---|---|
| Case 2: Combined Rankine/Brayton Power Cycle Scaled to 600 MWt HTGR | | 45.7% | 274 |
| with Steam Generator | $191,063,191 | | |
| without Steam Generator | $159,362,213 | | |
| Case 3: IGCC w/o $CO_2$ Shell™ | | 41.1% | 636 |
| with Steam Generator | $310,067,446 | | |
| without Steam Generator | $257,827,254 | | |
| Case 3: Combined Rankine/Brayton Power Cycle Scaled to 600 MWt HTGR | | 45.7% | 274 |
| with Steam Generator | $187,230,829 | | |
| without Steam Generator | $155,686,162 | | |
| Average Combine Rankine/Brayton Power Cycle Scaled to 600 MWt HTGR | | **45.7%** | **274** |
| with Steam Generator | **$191,814,501** | | |
| without Steam Generator | **$160,266,610** | | |

The capital costs presented are for inside the battery limits and exclude costs for administrative offices, storage areas, utilities, and other essential and nonessential auxiliary facilities. The estimate presented is a study (factored) estimate that has a probable error up to ±30%[6]. Fixed capital costs were estimated from literature estimates and scaled estimates (capacity, year, and material) from previous quotes. Capacity adjustments were based on the six-tenths factor rule:

$$C_2 = C_1\left(\frac{q_2}{q_1}\right)^n \tag{10}$$

where $C_1$ is the cost of the equipment item at capacity $q_1$, $C_2$ is the cost of the equipment at capacity $q_2$, and n is the exponential factor, which typically has a value of 0.6.[7] It was assumed that the number of trains did not have an impact on cost scaling. Cost indices were used to adjust equipment prices from previous years to values in July of 2009 using the CEPCI. Costs for HTGRs were scaled directly based on capacity—the six-tenths factor rule was not used.

Table 10. CEPCI data.

| Year | CEPCI | Year | CEPCI |
|---|---|---|---|
| 1990 | 357.6 | 2000 | 394.1 |
| 1991 | 361.3 | 2001 | 394.3 |
| 1992 | 358.2 | 2002 | 395.6 |
| 1993 | 359.2 | 2003 | 402 |
| 1994 | 368.1 | 2004 | 444.2 |
| 1995 | 381.1 | 2005 | 468.2 |
| 1996 | 381.7 | 2006 | 499.6 |
| 1997 | 386.5 | 2007 | 525.4 |
| 1998 | 389.5 | 2008 | 575.4 |
| 1999 | 390.6 | July 2009 | 512 |

An engineering fee of 10% and a project contingency of 18% were assumed to determine the total capital investment. Neither engineering fees nor contingencies were applied to the HTGR costs, but the fees were applied to the power cycle costs. Tables 11 and 12 present the capital cost estimate breakdown for the power generation cycles. For the Rankine steam cycle case, 15.8% of the total capital investment is the power cycle. The combined Rankine/Brayton cycle makes up 16.9% of the total capital investment.

Cost estimators at the INL performed a capital cost analyses for a number of nuclear integrated industrial processes. The power cycle capital costs are a part of many of these analyses. In appendix D is the capital cost analyses for ammonia production. Based on this analysis and scaled to a 600 MWt reactor, the total capital costs of the reactor and power cycle are $1,025,100,000 and $189,900,000. The total capital cost is $1,215,000,000.

Table 11. Total capital investment, power production, Rankine steam cycle case ($).

| | Installed Cost | Engineering Fee | Contingency | Total Capital Cost |
|---|---|---|---|---|
| Nuclear Reactor | | | | $1,025,000,000 |
| Nuclear Power Cycle | $148,362,255 | $14,836,226 | $29,375,726 | $192,574,207 |
| **Total Capital Investment** | | | | **$1,217,574,207** |
| **Total Capital Investment (+50% HTGR)** | | | | **$1,730,074,207** |
| **Total Capital Investment (-30% HTGR)** | | | | **$910,074,207** |

Table 12. Total capital investment, power production, Rankine/Brayton power cycle case ($).

| | Installed Cost | Engineering Fee | Contingency | Total Capital Cost |
|---|---|---|---|---|
| Nuclear Reactor | | | | $1,025,000,000 |
| Nuclear Power Cycle | $160,266,610 | $16,026,661 | $31,732,789 | $208,026,060 |
| **Total Capital Investment** | | | | **$1,233,026,060** |
| **Total Capital Investment (+50% HTGR)** | | | | **$1,745,526,060** |
| **Total Capital Investment (-30% HTGR)** | | | | **$925,526,060** |

## 4.2 Estimation of Revenue

Yearly revenues were estimated for the Rankine and combined Rankine/Brayton power cycle cases. Revenues were estimated for low, average, and high prices for electricity.

Table 13. Annual revenues, Rankine power cycle case.

| | Price | | Generated | | Annual Revenue |
|---|---|---|---|---|---|
| Electricity – Low | 1.50 | $/(kWe-day) | 240 | MWe | **$120,888,000** |
| Electricity – Avg. | 2.125 | $/(kWe-day) | 240 | MWe | **$171,258,000** |
| Electricity – High | 2.75 | $/(kWe-day) | 240 | MWe | **$221,628,000** |

Table 14. Annual revenues, combined Rankine/Brayton cycle case.

| | Price | | Generated | | Annual Revenue |
|---|---|---|---|---|---|
| Electricity – Low | 1.50 | $/(kWe-day) | 274 | MWe | **$138,182,540** |
| Electricity – Avg. | 2.125 | $/(kWe-day) | 274 | MWe | **$195,758,598** |
| Electricity – High | 2.75 | $/(kWe-day) | 274 | MWe | **$253,334,656** |

## 4.1 Estimation of Manufacturing Costs

Manufacturing cost is the sum of direct and indirect manufacturing costs. Direct manufacturing costs for this project include the cost of raw materials, utilities, and operating labor and maintenance. Indirect manufacturing costs include estimates for the cost of overhead and insurance and taxes.[6]

Labor costs are assumed to be 1.15% of the total capital investment. Maintenance costs were assumed to be 3% of the total capital investment.[9] The power cycles

were not included in the TCI for operation and maintenance costs, as they were calculated separately. Taxes and insurance were assumed to be 1.5% of the total capital investment, excluding the HTGR, an overhead of 65% of the labor and maintenance costs was assumed, and royalties were assumed to be 1% of the coal or natural gas cost.[9] Availability of the nuclear plant was assumed to be 92%.

Based on Reference 5 and the process model, the number of staff for the combined Rankine/Brayton cycle is seven per shift considering four shifts. The water needed to cool the cycle is 1,868 gallons per minute, and a power output of 274 MWe.

Seven men are needed per shift for the Rankine cycle, with 1,943 gallons of water per minute to cool the cycle, and a power output of 240 MWe. All operation and maintenance costs are based on a 600 MWt HTGR.

Table 15. Annual manufacturing costs, Rankine case.

| | Price | | Consumed | | Annual Cost |
|---|---|---|---|---|---|
| Direct Costs | | | | | |
| Materials | | | | | |
| Nuclear Fuel | 4.22 | $/MWt-h | 600 | MWt | $20,416,590 |
| Operation and Maintenance | | | | | $8,276,996 |
| Indirect Costs | | | | | |
| Insurance and Taxes | | | | | $2,888,613 |
| **Manufacturing Costs** | | | | | **$31,582,198** |

Table 16. Annual manufacturing costs, combined Rankine/Brayton case.

| | Price | | Consumed | | Annual Cost |
|---|---|---|---|---|---|
| Direct Costs | | | | | |
| Materials | | | | | |
| Nuclear Fuel | 4.22 | $/MWt-h | 600 | MWt | $20,416,590 |
| Operation and Maintenance | | | | | $8,276,996 |
| Indirect Costs | | | | | |
| Insurance and Taxes | | | | | $3,120,391 |
| **Manufacturing Costs** | | | | | **$31,813,976** |

## 4.2 Economic Comparison

To assess the economics of the power cycle cases, several economic indicators were calculated: the internal rate of return (IRR) for low, average, and high hydrogen selling prices, and the electricity price necessary for a return of 12%. The following assumptions were made for the economic analyses:

- The plant startup year is 2014
- A construction period of 5 years for the nuclear plant, which begins in 2009
  - All reactors will come online at the same time
  - Percent capital invested for the HTGR is 20% per year
- Plant startup time is 1 year
  - Operating costs are 85% of the total value during startup
  - Revenues are 60% of the total value during startup
- The analysis period for the economic evaluation assumes an economic life of 30 years, excluding construction time (the model is built to accommodate up to 40 years)
- An inflation rate of 2.5%
- Debt-to-equity ratios of 80%-to-20% and 55%-to-45% are calculated; however, results are only presented for 80%-to-20% as this would be most consistent for an NOAK plant
  - The interest rate on debt is to be 8%
  - The repayment term on the loan is to be 15 years
- The effective income tax rate is 38.9%
  - State tax is 6%
  - Federal tax is 35%
- Modified Accelerated Cost-Recovery System (MACRS) depreciation.

### 4.2.1 Cash Flow

To assess the IRR and present worth (PW) of each scenario, it is necessary to calculate the after tax cash flow. To calculate the after tax cash flow (ATCF) it is necessary to first calculate the revenues ($R_k$), cash outflows ($E_k$), sum of all noncash or book, costs such as depreciation ($d_k$), net income before taxes (NIBT), the effective income tax rate (t), and the income taxes ($T_k$) for each year (k). The taxable income is

revenue minus the sum of all cash outflow and noncash costs. Therefore the income taxes per year are defined as:

$$T_k = t(R_k - E_k - d_k) \tag{11}$$

Depreciation for the economic calculations was calculated using a standard MACRS depreciation method with a property class of 15 years. Depreciation was assumed for the total capital investment over the 5-year construction schedule, including inflation. Table 17 presents the recovery rates for a 15-year property class:

Table 17. MACRS depreciation.

| Year | Recovery Rate | Year | Recovery Rate |
|---|---|---|---|
| 1 | 0.05 | 9 | 0.0591 |
| 2 | 0.09 | 10 | 0.059 |
| 3 | 0.0855 | 11 | 0.0591 |
| 4 | 0.077 | 12 | 0.059 |
| 5 | 0.0693 | 13 | 0.0591 |
| 6 | 0.0623 | 14 | 0.059 |
| 7 | 0.059 | 15 | 0.0591 |
| 8 | 0.059 | 16 | 0.0295 |

The after tax cash flow is then the sum of the before tax cash flow (BTCF) minus the income taxes owed. Note that the expenditures for capital are not taxed but are included in the BTCF each year there is a capital expenditure (Ck), which includes the equity capital and the debt principle. The before tax cash flow is defined as follows:

$$BTCF_k = R_k - E_k - C_k \tag{12}$$

The ATCF can then be defined as:

$$ATCF_k = BTCF_k - T_k \tag{13}$$

### 4.2.2 Internal Rate of Return

The IRR method is the most widely used rate-of-return method for performing engineering economic analyses. This method solves for the interest rate that equates the equivalent worth of an alternative's cash inflows to the equivalent worth of cash outflows (after tax cash flow) (i.e., the interest rate at which the PW is zero). The resulting interest is

the IRR (i'). For the project to be economically viable, the calculated IRR must be greater than the desired minimum annual rate of return (MARR).

$$PW(i'\%) = \sum_{k=0}^{N} ATCF_k (1+i')^{-k} = 0 \tag{14}$$

IRR calculations were performed for an 80%-to-20% debt-to-equity ratio (results for the 55%-to-45% ratio can be found in Appendix C for Rankine steam power cycle and for combined Rankine/Brayton power cycle) for +50% TCI and -30%TCI for the electricity at low, average, and high prices. In addition, the price of electricity necessary for an IRR of 12% and a present worth of zero was calculated for each case at each debt-to-equity ratio. The IRR and price of electricity required (for an IRR of 12%) was solved for using the Goal Seek function in Excel.

# 5. ECONOMIC MODELING RESULTS

Table 18 presents the results for an 80%-to-20% debt-to-equity ratio for the Rankine and combined Rankine/Brayton cycle. Figure 9 depicts the associated IRR results for the Rankine case and Figure 10 is for the combined Rankine/Brayton case. The cost of electricity from a HTGR via a Rankine power cycle for an 80% debt to 20% equity and a 12% IRR is $2.30/kWe-day or 9.57¢/kWe-hr, and for the combined Rankine/Brayton cycle, $2.03/kWe-day or 8.46¢/kWe-hr. Based on the U.S. Energy Information Administration, the average retail price of electricity in November 2009 was 11.33¢/kWe-hr to residential, 9.82¢/kWe-hr to commercial, and 6.44¢/kWe-hr to industrial consumers.[9] A HTGR producing electricity is economical. One can also see that by increasing the power cycle efficiency from 40 to 45.7% can reduce the cost of electricity production by 11.7%.

Table 18. IRR results for the cost of electricity from a HTGR.

| | TCI -30% HTGR | | TCI | | TCI +50% HTGR | |
|---|---|---|---|---|---|---|
| | IRR | ($/kW-day) | IRR | ($/kW-day) | IRR | ($/kW-day) |
| Rankine Cycle | *$910,074,207* | | *$1,217,574,207* | | *$1,730,074,207* | |
| | 9.08 | $1.50 | 6.08 | $1.50 | 3.03 | $1.50 |
| | 14.73 | $2.13 | 10.84 | $2.13 | 6.99 | $2.13 |
| | 19.59 | $2.75 | 14.88 | $2.75 | 10.29 | $2.75 |
| | 12.0 | $1.81 | 12.00 | $2.30 | 12.00 | $3.11 |
| Combined Rankine/Brayton Cycle | *$925,526,060* | | *$1,233,026,060* | | *$1,745,526,060* | |
| | 10.92 | $1.50 | 7.69 | $1.50 | 4.41 | $1.50 |
| | 16.92 | $2.13 | 12.70 | $2.13 | 8.55 | $2.13 |
| | 22.09 | $2.75 | 17.02 | $2.75 | 12.04 | $2.75 |
| | 12.00 | $1.60 | 12.00 | $2.03 | 12.00 | $2.74 |

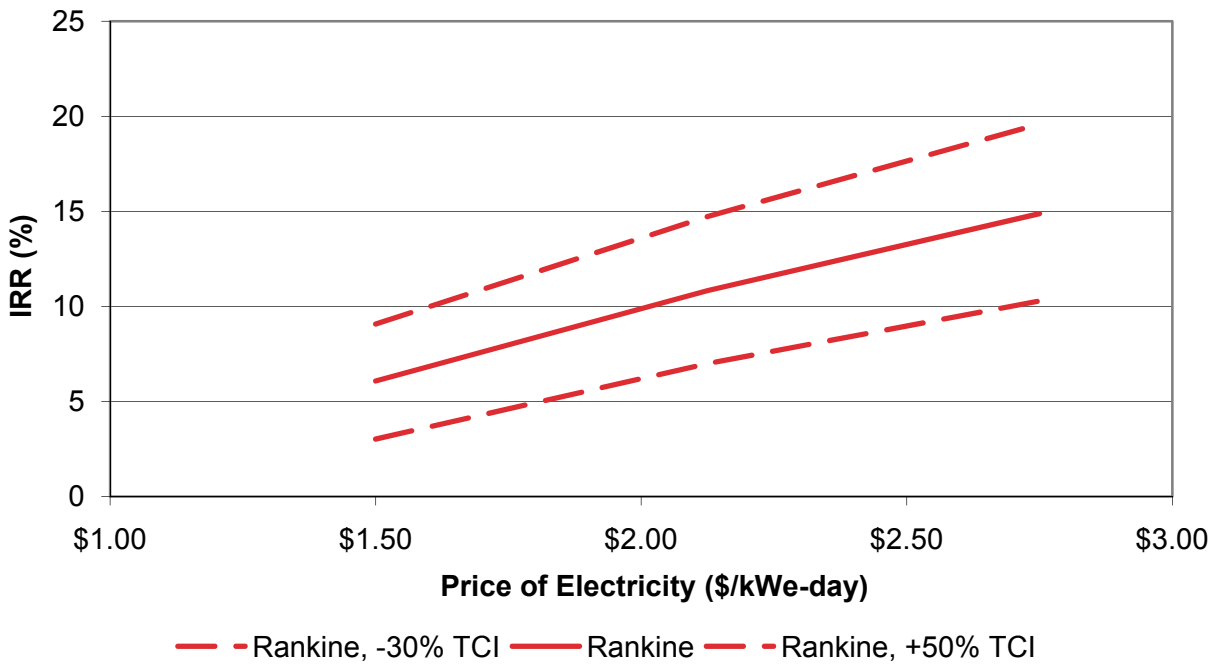


Figure 9. Rankine IRR economic results.

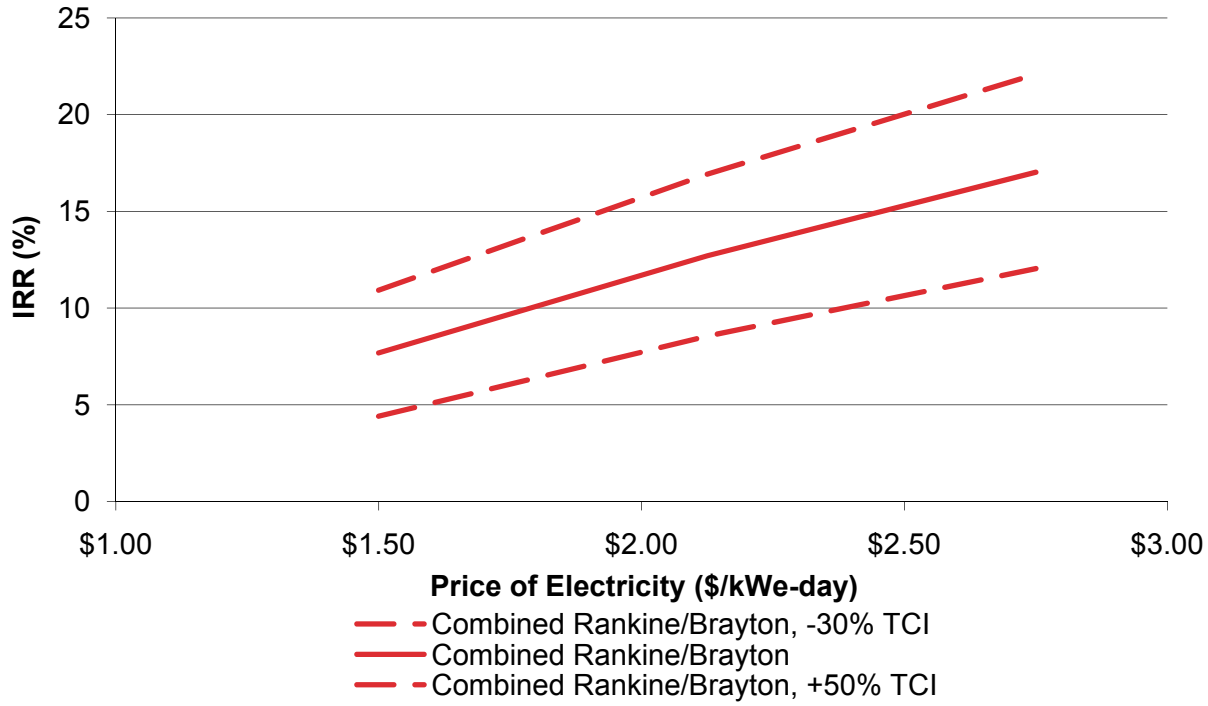


Figure 10. Combined Rankine/Brayton cycle IRR economic results.

# 6. CONCLUSIONS AND RECOMMENDATONS

The following conclusions may be made from a 600 MWt HTGR with a 750°C outlet:

- Net power conversion efficiencies vary from 40% to 46.7% at a reactor outlet temperature of 750°C
- The Rankine steam cycle at a thermal efficiency of 40% was selected to be used with other HTGR process heat applications because it has more realistic assumptions in its development
- 84.2% of the capital cost of the electric power generation by way of the Rankine cycle is the reactor
- At a 12% IRR, the cost of power production is 9.57¢/kWe-hr using a Rankine cycle and 8.46¢/kWe-hr using a combined Rankine/Brayton cycle
- The high water usage is from the condenser of the power cycle.

It is recommended to:

- Perform a literature review to see how well the cycles in the report compare to other power conversion cycles developed for HTGRs
- Investigate the economics of electric power generation considering other power conversion cycles for HTGRs
- Investigate further economic and HTGR integration with other industrial processes at higher reactor outlet temperatures
- Investigate a super critical CO2 cycle
- Study to see if a reduction in water usage will occur if another type of cooling is used for the condenser of the power cycle.

# 7. REFERENCES

1. Stultz, Steven C. and John B. Kitto, eds. 2005, *Steam: Its Generation and Use*, Edition 41, The Babcock and Wilcox Company, Chapter 2, p. 2–16, 2005.

2. Shultz, Richard R., 2007, “NGNP Engineering White Paper: Power Conversion System Trade Study,” INL/EXT-07-12727, April 2007.

3. General Atomics, 2008, “Power Conversion System Alternatives and Selection Study,” Report 911131 Rev.0, December 2008.

4. AREVA, 2008, "NGNP with Hydrogen Production Conceptual Design Studies Power Conversion System Study," Doc. # 12-9094881-001, September 30, 2008.

5. Klara, Julianne M., 2007, "Cost and Performance Baseline for Fossil Energy Plants Study, Volume 1: Bituminous Coal and Natural Gas to Electricity," DOE/NETL-2007/1287, May 2007.

6. Perry, Robert H., Don W. Green, *Perry's Chemical Engineers' Handbook*, 7th Edition, McGraw-Hill, 1997.

7. Peters, Max S., and Klaus D. Timmerhaus, 1991, *Plant Design and Economics for Chemical Engineers*, 4th Edition, 1991.

8. NETL, *Shell Gasifier IGCC Base Cases*, PED-IGCC-98-002, Pittsburgh: NETL, 2000.

9. Jones, David S. J., and Peter R. Rujado, 2006, *Handbook of Petroleum Processing*, Dordrecht, Spring 2006.

10. EIA, 2010, "Independent Statistics and Analysis, Average Retail Price of Electricity to Ultimate Customers by End-Use Sector, by State," U.S. Energy Information Administration, March 15, 2010, http://www.eia.doe.gov/cneaf/electricity/epm/table5_6_a.html, Web page accessed April 2010.

# 8. APPENDIXES

Appendix A, Power Cycle Process Flow Diagrams

Appendix B, 600-MWt NGCC Combustion

Appendix C, 55%-to-44% Debt-to-Equity Ratio Results

Appendix D, Cost Estimate Support Data Recapitulation

# Appendix A
# Power Cycle Process Flow Diagrams

The model of the power cycles and results in Appendix A were developed using HYSYS.Plant Version 2.2.2 (Build 3806) from Hyprotech Ltd. on a desktop computer running Microsoft Windows XP Professional Version 2002 Service Pack 3.

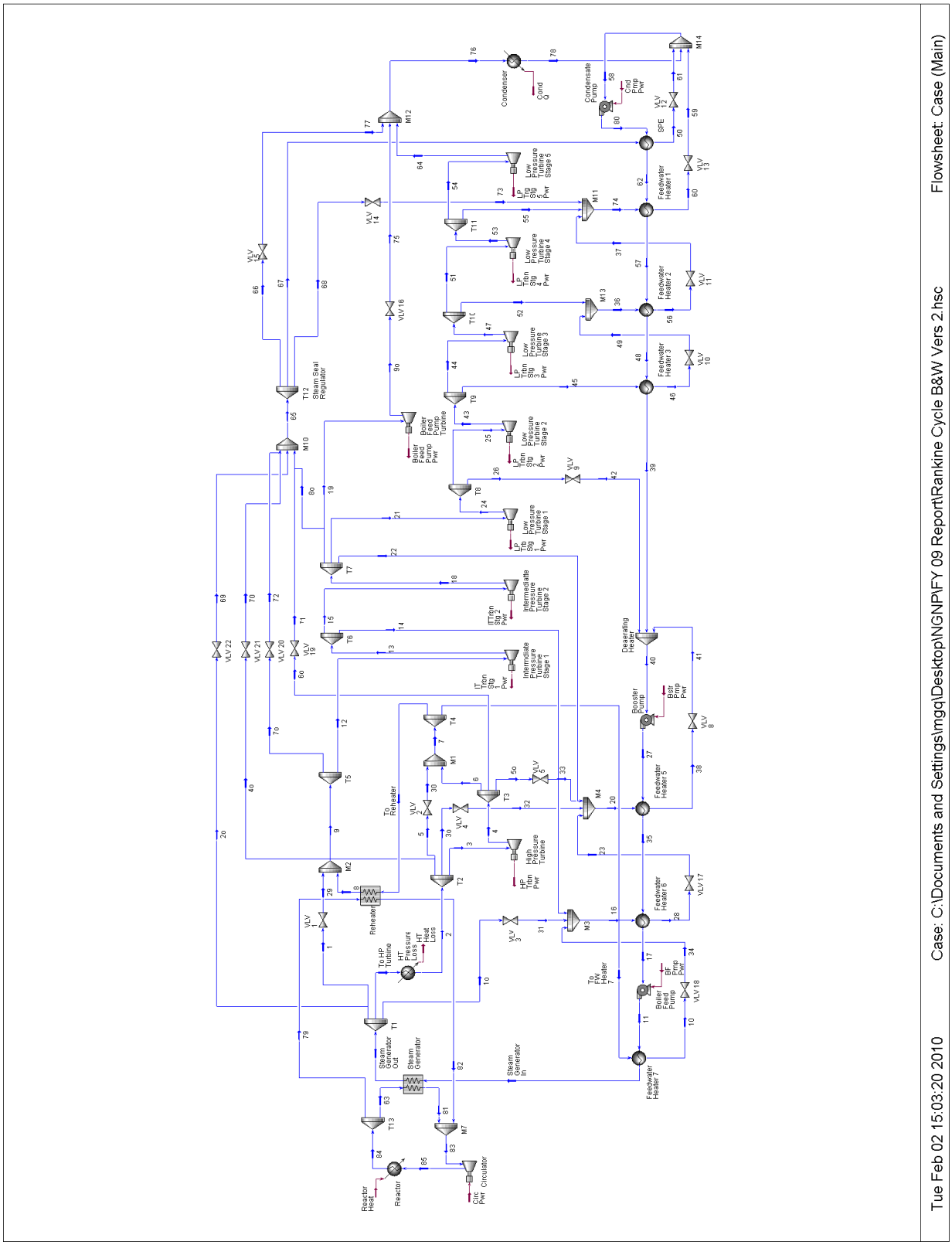
Tue Feb 02 15:03:20 2010
Case: C:\Documents and Settings\mgq\Desktop\NGNP\FY 09 Report\Rankine Cycle B&W Vers 2.hsc
Flowsheet: Case (Main)
Condenser
Condensate Pump
Feedwater Heater 1
Feedwater Heater 2
Feedwater Heater 3
Low Pressure Turbine Stage 1
Low Pressure Turbine Stage 2
Low Pressure Turbine Stage 3
Low Pressure Turbine Stage 4
Low Pressure Turbine Stage 5
Steam Seal Regulator
Boiler Feed Pump Turbine
Intermediate Pressure Turbine Stage 1
Intermediate Pressure Turbine Stage 2
Deaerating Heater
Booster Pump
Feedwater Heater 5
Feedwater Heater 6
Feedwater Heater 7
High Pressure Turbine
Reheater
To Reheater
To HP Turbine
HT Pressure Loss
HT Heat Loss
Steam Generator Out
Steam Generator
Steam Generator In
Boiler Feed Pump
To FW Heater 7
Reactor
Reactor Heat
Circulator
Clc Pwr

HYPROTECH

INL
Calgary, Alberta
CANADA

| | |
|---|---|
| Case Name: | C:\Documents and Settings\mgq\Desktop\NGNP\FY 09 Report\Rankine |
| Unit Set: | NGNP |
| Date/Time: | Tue Feb 02 15:24:12 2010 |

# Workbook: Case (Main)

## Material Streams

| Name | | Steam Generator Out | 1o | 2o | 1 | To HP Turbine |
|---|---|---|---|---|---|---|
| Vapour Fraction | | 1.0000 | 1.0000 | 1.0000 | 1.0000 | 1.0000 |
| Temperature | (C) | 537.78 * | 537.78 | 537.78 | 537.78 | 537.78 |
| Pressure | (MPa) | 24.132 | 24.132 | 24.132 | 24.132 | 24.132 |
| Molar Flow | (kgmole/s) | 14.252 | 3.9496e-003 | 1.8830e-003 | 2.1270e-002 | 14.225 |
| Mass Flow | (kg/s) | 256.76 * | 7.1153e-002 | 3.3923e-002 | 0.38318 | 256.27 |
| Liquid Volume Flow | (m3/h) | 926.2 | 0.2567 | 0.1224 | 1.382 | 924.4 |
| Heat Flow | (kW) | -3.246e+006 | -899.6 | -428.9 | -4845 | -3.240e+006 |
| Name | | 2 | 3o | 4o | 5 | 3 |
| Vapour Fraction | | 1.0000 | 1.0000 | 1.0000 | 1.0000 | 1.0000 |
| Temperature | (C) | 514.35 | 514.35 | 514.35 | 514.35 | 514.35 |
| Pressure | (MPa) | 23.787 | 23.787 | 23.787 | 23.787 | 23.787 |
| Molar Flow | (kgmole/s) | 14.225 | 2.7470e-002 | 1.2746e-002 | 0.11653 | 14.069 |
| Mass Flow | (kg/s) | 256.27 | 0.49487 | 0.22962 | 2.0992 | 253.45 |
| Liquid Volume Flow | (m3/h) | 924.4 | 1.785 | 0.8283 | 7.572 | 914.2 |
| Heat Flow | (kW) | -3.258e+006 | -6292 | -2919 | -2.669e+004 | -3.222e+006 |
| Name | | 4 | 5o | 6o | 6 | 7 |
| Vapour Fraction | | 1.0000 | 1.0000 | 1.0000 | 1.0000 | 1.0000 |
| Temperature | (C) | 283.29 | 283.29 | 283.29 | 283.29 | 284.25 |
| Pressure | (MPa) | 4.9291 * | 4.9291 | 4.9291 | 4.9291 | 4.9291 |
| Molar Flow | (kgmole/s) | 14.069 | 3.5144e-002 | 1.7658e-002 | 14.016 | 14.132 |
| Mass Flow | (kg/s) | 253.45 | 0.63312 | 0.31811 | 252.50 | 254.59 |
| Liquid Volume Flow | (m3/h) | 914.2 | 2.284 | 1.147 | 910.8 | 918.4 |
| Heat Flow | (kW) | -3.295e+006 | -8231 | -4136 | -3.283e+006 | -3.309e+006 |
| Name | | To Reheater | To FW Heater 7 | 8 | 9 | 10 |
| Vapour Fraction | | 1.0000 | 1.0000 | 1.0000 | 1.0000 | 0.0000 |
| Temperature | (C) | 284.25 | 284.25 | 537.78 * | 537.60 | 218.69 |
| Pressure | (MPa) | 4.9291 | 4.9291 | 4.4395 | 4.4395 | 4.6795 |
| Molar Flow | (kgmole/s) | 12.667 | 1.4655 | 12.667 | 12.688 | 1.4655 |
| Mass Flow | (kg/s) | 228.19 | 26.400 | 228.19 | 228.58 | 26.400 |
| Liquid Volume Flow | (m3/h) | 823.2 | 95.23 | 823.2 | 824.5 | 95.23 |
| Heat Flow | (kW) | -2.966e+006 | -3.432e+005 | -2.830e+006 | -2.835e+006 | -3.950e+005 |
| Name | | 11 | Steam Generator In | 17 | 7o | 12 |
| Vapour Fraction | | 0.0000 | 0.0000 | 0.0000 | 1.0000 | 1.0000 |
| Temperature | (C) | 213.13 | 254.11 | 206.56 * | 537.60 | 537.60 |
| Pressure | (MPa) | 29.303 * | 27.579 | 3.2405 | 4.4395 | 4.4395 |
| Molar Flow | (kgmole/s) | 14.252 | 14.252 | 14.252 | 9.1931e-003 | 12.679 |
| Mass Flow | (kg/s) | 256.76 | 256.76 | 256.76 | 0.16561 | 228.41 |
| Liquid Volume Flow | (m3/h) | 926.2 | 926.2 | 926.2 | 0.5974 | 823.9 |
| Heat Flow | (kW) | -3.847e+006 | -3.795e+006 | -3.858e+006 | -2054 | -2.833e+006 |
| Name | | 13 | 14 | 15 | 16 | 18 |
| Vapour Fraction | | 1.0000 | 1.0000 | 1.0000 | 0.4556 | 1.0000 |
| Temperature | (C) | 419.21 | 419.21 | 419.21 | 212.24 | 322.65 |
| Pressure | (MPa) | 1.9767 * | 1.9767 | 1.9767 | 1.9767 | 0.98043 * |
| Molar Flow | (kgmole/s) | 12.679 | 0.82452 | 11.854 | 2.2939 | 11.854 |
| Mass Flow | (kg/s) | 228.41 | 14.854 | 213.56 | 41.325 | 213.56 |
| Liquid Volume Flow | (m3/h) | 823.9 | 53.58 | 770.4 | 149.1 | 770.4 |
| Heat Flow | (kW) | -2.886e+006 | -1.877e+005 | -2.698e+006 | -5.836e+005 | -2.738e+006 |

HYPROTECH

INL
Calgary, Alberta
CANADA

| | |
|---|---|
| Case Name: | C:\Documents and Settings\mgq\Desktop\NGNP\FY 09 Report\Rankine |
| Unit Set: | NGNP |
| Date/Time: | Tue Feb 02 15:24:12 2010 |

# Workbook: Case (Main) (continued)

## Material Streams (continued)

| Name | | 19 | 8o | 21 | 22 | 9o |
|---|---|---|---|---|---|---|
| Vapour Fraction | | 1.0000 | 1.0000 | 1.0000 | 1.0000 | 0.9400 |
| Temperature | (C) | 322.65 | 322.65 | 322.65 | 322.65 | 42.804 |
| Pressure | (MPa) | 0.98043 | 0.98043 | 0.98043 | 0.98043 | 8.4660e-003 * |
| Molar Flow | (kgmole/s) | 0.75043 | 9.1023e-003 | 10.336 | 0.75868 | 0.75043 |
| Mass Flow | (kg/s) | 13.519 | 0.16398 | 186.21 | 13.668 | 13.519 |
| Liquid Volume Flow | (m3/h) | 48.77 | 0.5915 | 671.7 | 49.30 | 48.77 |
| Heat Flow | (kW) | -1.733e+005 | -2102 | -2.387e+006 | -1.752e+005 | -1.824e+005 |
| Name | | 20 | 24 | 25 | 26 | 27 |
| Vapour Fraction | | 0.3069 | 1.0000 | 1.0000 | 1.0000 | 0.0000 |
| Temperature | (C) | 179.18 | 224.65 | 224.65 | 224.65 | 133.87 |
| Pressure | (MPa) | 0.98043 | 0.35025 * | 0.35025 | 0.35025 | 3.6197 * |
| Molar Flow | (kgmole/s) | 3.1152 | 10.336 | 9.9462 | 0.39002 | 14.252 |
| Mass Flow | (kg/s) | 56.121 | 186.21 | 179.18 | 7.0262 | 256.76 |
| Liquid Volume Flow | (m3/h) | 202.4 | 671.7 | 646.4 | 25.35 | 926.2 |
| Heat Flow | (kW) | -8.155e+005 | -2.422e+006 | -2.330e+006 | -9.138e+004 | -3.945e+006 |
| Name | | 28 | 29 | 30 | 31 | 32 |
| Vapour Fraction | | 0.0000 | 1.0000 | 1.0000 | 1.0000 | 1.0000 |
| Temperature | (C) | 182.50 * | 432.04 | 404.88 | 414.75 | 374.13 |
| Pressure | (MPa) | 1.8581 | 4.4395 | 4.9291 | 1.9767 | 0.98043 |
| Molar Flow | (kgmole/s) | 2.2939 | 2.1270e-002 | 0.11653 | 3.9496e-003 | 2.7470e-002 |
| Mass Flow | (kg/s) | 41.325 | 0.38318 | 2.0992 | 7.1153e-002 | 0.49487 |
| Liquid Volume Flow | (m3/h) | 149.1 | 1.382 | 7.572 | 0.2567 | 1.785 |
| Heat Flow | (kW) | -6.257e+005 | -4845 | -2.669e+004 | -899.6 | -6292 |
| Name | | 33 | 35 | 38 | 39 | 40 |
| Vapour Fraction | | 1.0000 | 0.0000 | 0.0000 | 0.0000 | 0.0000 |
| Temperature | (C) | 234.97 | 172.34 | 140.67 * | 111.95 | 133.34 |
| Pressure | (MPa) | 0.98043 | 3.4129 | 0.95079 | 0.35000 | 0.35000 * |
| Molar Flow | (kgmole/s) | 3.5144e-002 | 14.252 | 3.1152 | 10.747 | 14.252 |
| Mass Flow | (kg/s) | 0.63312 | 256.76 | 56.121 | 193.61 | 256.76 |
| Liquid Volume Flow | (m3/h) | 2.284 | 926.2 | 202.4 | 698.4 | 926.2 |
| Heat Flow | (kW) | -8231 | -3.900e+006 | -8.606e+005 | -2.994e+006 | -3.946e+006 |
| Name | | 41 | 42 | 43 | 44 | 45 |
| Vapour Fraction | | 0.0040 | 1.0000 | 1.0000 | 1.0000 | 1.0000 |
| Temperature | (C) | 138.84 | 224.64 | 176.66 | 176.66 | 176.66 |
| Pressure | (MPa) | 0.35000 | 0.35000 | 0.19857 * | 0.19857 | 0.19857 |
| Molar Flow | (kgmole/s) | 3.1152 | 0.39002 | 9.9462 | 9.5578 | 0.38839 |
| Mass Flow | (kg/s) | 56.121 | 7.0262 | 179.18 | 172.18 | 6.9969 |
| Liquid Volume Flow | (m3/h) | 202.4 | 25.35 | 646.4 | 621.1 | 25.24 |
| Heat Flow | (kW) | -8.606e+005 | -9.138e+004 | -2.347e+006 | -2.255e+006 | -9.163e+004 |
| Name | | 46 | 47 | 48 | 49 | 51 |
| Vapour Fraction | | 0.0000 | 1.0000 | 0.0000 | 0.0000 | 1.0000 |
| Temperature | (C) | 97.543 | 124.23 | 91.987 | 97.559 | 124.23 |
| Pressure | (MPa) | 0.18685 * | 9.9491e-002 * | 0.36724 | 9.9491e-002 | 9.9491e-002 |
| Molar Flow | (kgmole/s) | 0.38839 | 9.5578 | 10.747 | 0.38839 | 9.1612 |
| Mass Flow | (kg/s) | 6.9969 | 172.18 | 193.61 | 6.9969 | 165.04 |
| Liquid Volume Flow | (m3/h) | 25.24 | 621.1 | 698.4 | 25.24 | 595.3 |
| Heat Flow | (kW) | -1.086e+005 | -2.272e+006 | -3.011e+006 | -1.086e+005 | -2.178e+006 |

HYPROTECH

INL
Calgary, Alberta
CANADA

| | |
|---|---|
| Case Name: | C:\Documents and Settings\mgq\Desktop\NGNP\FY 09 Report\Rankine |
| Unit Set: | NGNP |
| Date/Time: | Tue Feb 02 15:24:12 2010 |

# Workbook: Case (Main) (continued)

## Material Streams (continued)

| Name | | 52 | 53 | 54 | 55 | 56 |
|---|---|---|---|---|---|---|
| Vapour Fraction | | 1.0000 | 0.9923 | 0.9923 | 0.9923 | 0.0000 |
| Temperature | (C) | 124.23 | 77.902 | 77.902 | 77.902 | 76.231 |
| Pressure | (MPa) | 9.9491e-002 | 4.3437e-002 * | 4.3437e-002 | 4.3437e-002 | 9.3493e-002 * |
| Molar Flow | (kgmole/s) | 0.39653 | 9.1612 | 8.5944 | 0.56684 | 0.78492 |
| Mass Flow | (kg/s) | 7.1434 | 165.04 | 154.83 | 10.212 | 14.140 |
| Liquid Volume Flow | (m3/h) | 25.77 | 595.3 | 558.5 | 36.84 | 51.01 |
| Heat Flow | (kW) | -9.425e+004 | -2.195e+006 | -2.059e+006 | -1.358e+005 | -2.209e+005 |
| Name | | 57 | 60 | 61 | 62 | 64 |
| Vapour Fraction | | 0.0000 | 0.0000 | 0.0435 | 0.0000 | 0.9393 |
| Temperature | (C) | 70.675 | 41.220 | 38.624 | 35.664 | 38.627 |
| Pressure | (MPa) | 0.36896 | 4.0817e-002 * | 6.7728e-003 | 0.38620 | 6.7728e-003 * |
| Molar Flow | (kgmole/s) | 10.747 | 1.3870 | 8.2752e-003 | 10.747 | 8.5944 |
| Mass Flow | (kg/s) | 193.61 | 24.986 | 0.14908 | 193.61 | 154.83 |
| Liquid Volume Flow | (m3/h) | 698.4 | 90.13 | 0.5378 | 698.4 | 558.5 |
| Heat Flow | (kW) | -3.029e+006 | -3.941e+005 | -2337 | -3.058e+006 | -2.090e+006 |
| Name | | 65 | 66 | 67 | 68 | 69 |
| Vapour Fraction | | 1.0000 | 1.0000 | 1.0000 | 1.0000 | 1.0000 |
| Temperature | (C) | 345.21 | 345.21 | 345.21 | 345.21 | 407.48 |
| Pressure | (MPa) | 0.98043 | 0.98043 | 0.98043 | 0.98043 | 0.98043 |
| Molar Flow | (kgmole/s) | 5.0582e-002 | 7.0930e-003 | 8.2752e-003 | 3.5214e-002 | 1.8830e-003 |
| Mass Flow | (kg/s) | 0.91124 | 0.12778 | 0.14908 | 0.63438 | 3.3923e-002 |
| Liquid Volume Flow | (m3/h) | 3.287 | 0.4609 | 0.5378 | 2.288 | 0.1224 |
| Heat Flow | (kW) | -1.164e+004 | -1632 | -1904 | -8104 | -428.9 |
| Name | | 70 | 71 | 72 | 73 | 74 |
| Vapour Fraction | | 1.0000 | 1.0000 | 1.0000 | 1.0000 | 0.4347 |
| Temperature | (C) | 374.13 | 234.97 | 519.59 | 336.78 | 77.903 |
| Pressure | (MPa) | 0.98043 | 0.98043 | 0.98043 | 4.3437e-002 | 4.3437e-002 |
| Molar Flow | (kgmole/s) | 1.2746e-002 | 1.7658e-002 | 9.1931e-003 | 3.5214e-002 | 1.3870 |
| Mass Flow | (kg/s) | 0.22962 | 0.31811 | 0.16561 | 0.63438 | 24.986 |
| Liquid Volume Flow | (m3/h) | 0.8283 | 1.147 | 0.5974 | 2.288 | 90.13 |
| Heat Flow | (kW) | -2919 | -4136 | -2054 | -8104 | -3.648e+005 |
| Name | | 75 | 76 | 77 | 78 | 34 |
| Vapour Fraction | | 0.9435 | 0.9398 | 1.0000 | 0.0000 | 0.0172 |
| Temperature | (C) | 38.629 | 38.627 | 336.45 | 34.162 | 212.24 |
| Pressure | (MPa) | 6.7728e-003 | 6.7728e-003 | 6.7728e-003 | 6.7728e-003 | 1.9767 |
| Molar Flow | (kgmole/s) | 0.75043 | 9.3519 | 7.0930e-003 | 9.3519 | 1.4655 |
| Mass Flow | (kg/s) | 13.519 | 168.48 | 0.12778 | 168.48 | 26.400 |
| Liquid Volume Flow | (m3/h) | 48.77 | 607.7 | 0.4609 | 607.7 | 95.23 |
| Heat Flow | (kW) | -1.824e+005 | -2.274e+006 | -1632 | -2.662e+006 | -3.950e+005 |
| Name | | 23 | 36 | 37 | 50 | 58 |
| Vapour Fraction | | 0.0079 | 0.5139 | 0.0000 | 0.0000 | 0.0000 |
| Temperature | (C) | 179.18 | 99.448 | 76.240 | 62.922 | 35.095 |
| Pressure | (MPa) | 0.98043 | 9.9491e-002 | 4.3437e-002 | 0.91149 | 6.7728e-003 |
| Molar Flow | (kgmole/s) | 2.2939 | 0.78492 | 0.78492 | 8.2752e-003 | 10.747 |
| Mass Flow | (kg/s) | 41.325 | 14.140 | 14.140 | 0.14908 | 193.61 |
| Liquid Volume Flow | (m3/h) | 149.1 | 51.01 | 51.01 | 0.5378 | 698.4 |
| Heat Flow | (kW) | -6.257e+005 | -2.029e+005 | -2.209e+005 | -2337 | -3.059e+006 |

| | | |
|---|---|---|
| HYPROTECH | INL<br>Calgary, Alberta<br>CANADA | Case Name: C:\Documents and Settings\mgq\Desktop\NGNP\FY 09 Report\Rankine<br>Unit Set: NGNP<br>Date/Time: Tue Feb 02 15:24:12 2010 |

# Workbook: Case (Main) (continued)

## Material Streams (continued)

| Name | | 59 | 80 | 63 | 79 | 81 |
|---|---|---|---|---|---|---|
| Vapour Fraction | | 0.0046 | 0.0000 | 1.0000 | 1.0000 | 1.0000 |
| Temperature | (C) | 38.628 | 35.142 | 750.00 | 750.00 | 305.92 * |
| Pressure | (MPa) | 6.7728e-003 | 0.40343 | 7.0400 | 7.0400 | 6.9700 |
| Molar Flow | (kgmole/s) | 1.3870 | 10.747 | 59.490 | 15.785 | 59.490 |
| Mass Flow | (kg/s) | 24.986 | 193.61 | 238.14 | 63.187 | 238.14 |
| Liquid Volume Flow | (m3/h) | 90.13 | 698.4 | 6910 | 1834 | 6910 |
| Heat Flow | (kW) | -3.941e+005 | -3.059e+006 | 9.007e+005 | 2.390e+005 | 3.518e+005 |

| Name | | 82 | 83 | 84 | 85 |
|---|---|---|---|---|---|
| Vapour Fraction | | 1.0000 | 1.0000 | 1.0000 | 1.0000 |
| Temperature | (C) | 334.25 * | 311.86 | 750.00 * | 316.04 |
| Pressure | (MPa) | 6.9700 | 6.9700 | 7.0400 | 7.0700 * |
| Molar Flow | (kgmole/s) | 15.785 | 75.275 | 75.275 | 75.275 |
| Mass Flow | (kg/s) | 63.187 | 301.32 | 301.32 | 301.32 |
| Liquid Volume Flow | (m3/h) | 1834 | 8744 | 8744 | 8744 |
| Heat Flow | (kW) | 1.026e+005 | 4.544e+005 | 1.140e+006 | 4.610e+005 |

## Compositions

| Name | Steam Generator Out | 1o | 2o | 1 | To HP Turbine |
|---|---|---|---|---|---|
| Comp Mole Frac (H2O) | 1.00000 * | 1.00000 | 1.00000 | 1.00000 | 1.00000 |
| Comp Mole Frac (Helium) | 0.00000 * | 0.00000 | 0.00000 | 0.00000 | 0.00000 |

| Name | 2 | 3o | 4o | 5 | 3 |
|---|---|---|---|---|---|
| Comp Mole Frac (H2O) | 1.00000 | 1.00000 | 1.00000 | 1.00000 | 1.00000 |
| Comp Mole Frac (Helium) | 0.00000 | 0.00000 | 0.00000 | 0.00000 | 0.00000 |

| Name | 4 | 5o | 6o | 6 | 7 |
|---|---|---|---|---|---|
| Comp Mole Frac (H2O) | 1.00000 | 1.00000 | 1.00000 | 1.00000 | 1.00000 |
| Comp Mole Frac (Helium) | 0.00000 | 0.00000 | 0.00000 | 0.00000 | 0.00000 |

| Name | To Reheater | To FW Heater 7 | 8 | 9 | 10 |
|---|---|---|---|---|---|
| Comp Mole Frac (H2O) | 1.00000 | 1.00000 | 1.00000 | 1.00000 | 1.00000 |
| Comp Mole Frac (Helium) | 0.00000 | 0.00000 | 0.00000 | 0.00000 | 0.00000 |

| Name | 11 | Steam Generator In | 17 | 7o | 12 |
|---|---|---|---|---|---|
| Comp Mole Frac (H2O) | 1.00000 | 1.00000 | 1.00000 | 1.00000 | 1.00000 |
| Comp Mole Frac (Helium) | 0.00000 | 0.00000 | 0.00000 | 0.00000 | 0.00000 |

| Name | 13 | 14 | 15 | 16 | 18 |
|---|---|---|---|---|---|
| Comp Mole Frac (H2O) | 1.00000 | 1.00000 | 1.00000 | 1.00000 | 1.00000 |
| Comp Mole Frac (Helium) | 0.00000 | 0.00000 | 0.00000 | 0.00000 | 0.00000 |

| Name | 19 | 8o | 21 | 22 | 9o |
|---|---|---|---|---|---|
| Comp Mole Frac (H2O) | 1.00000 | 1.00000 | 1.00000 | 1.00000 | 1.00000 |
| Comp Mole Frac (Helium) | 0.00000 | 0.00000 | 0.00000 | 0.00000 | 0.00000 |

| Name | 20 | 24 | 25 | 26 | 27 |
|---|---|---|---|---|---|
| Comp Mole Frac (H2O) | 1.00000 | 1.00000 | 1.00000 | 1.00000 | 1.00000 |
| Comp Mole Frac (Helium) | 0.00000 | 0.00000 | 0.00000 | 0.00000 | 0.00000 |

| Name | 28 | 29 | 30 | 31 | 32 |
|---|---|---|---|---|---|
| Comp Mole Frac (H2O) | 1.00000 | 1.00000 | 1.00000 | 1.00000 | 1.00000 |
| Comp Mole Frac (Helium) | 0.00000 | 0.00000 | 0.00000 | 0.00000 | 0.00000 |

| Name | 33 | 35 | 38 | 39 | 40 |
|---|---|---|---|---|---|
| Comp Mole Frac (H2O) | 1.00000 | 1.00000 | 1.00000 | 1.00000 | 1.00000 |
| Comp Mole Frac (Helium) | 0.00000 | 0.00000 | 0.00000 | 0.00000 | 0.00000 |

| Name | 41 | 42 | 43 | 44 | 45 |
|---|---|---|---|---|---|
| Comp Mole Frac (H2O) | 1.00000 | 1.00000 | 1.00000 | 1.00000 | 1.00000 |
| Comp Mole Frac (Helium) | 0.00000 | 0.00000 | 0.00000 | 0.00000 | 0.00000 |

| Name | 46 | 47 | 48 | 49 | 51 |
|---|---|---|---|---|---|
| Comp Mole Frac (H2O) | 1.00000 | 1.00000 | 1.00000 | 1.00000 | 1.00000 |
| Comp Mole Frac (Helium) | 0.00000 | 0.00000 | 0.00000 | 0.00000 | 0.00000 |

Hyprotech Ltd. HYSYS.Plant v2.2.2 (Build 3806) Page 4 of 10

Licensed to: INL

* Specified by user.

| | | |
|---|---|---|
| HYPROTECH | INL<br>Calgary, Alberta<br>CANADA | Case Name: C:\Documents and Settings\mgq\Desktop\NGNP\FY 09 Report\Rankin<br>Unit Set: NGNP<br>Date/Time: Tue Feb 02 15:24:12 2010 |

# Workbook: Case (Main) (continued)

## Compositions (continued)

| Name | 52 | 53 | 54 | 55 | 56 |
|---|---|---|---|---|---|
| Comp Mole Frac (H2O) | 1.00000 | 1.00000 | 1.00000 | 1.00000 | 1.00000 |
| Comp Mole Frac (Helium) | 0.00000 | 0.00000 | 0.00000 | 0.00000 | 0.00000 |
| Name | 57 | 60 | 61 | 62 | 64 |
| Comp Mole Frac (H2O) | 1.00000 | 1.00000 | 1.00000 | 1.00000 | 1.00000 |
| Comp Mole Frac (Helium) | 0.00000 | 0.00000 | 0.00000 | 0.00000 | 0.00000 |
| Name | 65 | 66 | 67 | 68 | 69 |
| Comp Mole Frac (H2O) | 1.00000 | 1.00000 | 1.00000 | 1.00000 | 1.00000 |
| Comp Mole Frac (Helium) | 0.00000 | 0.00000 | 0.00000 | 0.00000 | 0.00000 |
| Name | 70 | 71 | 72 | 73 | 74 |
| Comp Mole Frac (H2O) | 1.00000 | 1.00000 | 1.00000 | 1.00000 | 1.00000 |
| Comp Mole Frac (Helium) | 0.00000 | 0.00000 | 0.00000 | 0.00000 | 0.00000 |
| Name | 75 | 76 | 77 | 78 | 34 |
| Comp Mole Frac (H2O) | 1.00000 | 1.00000 | 1.00000 | 1.00000 | 1.00000 |
| Comp Mole Frac (Helium) | 0.00000 | 0.00000 | 0.00000 | 0.00000 | 0.00000 |
| Name | 23 | 36 | 37 | 50 | 58 |
| Comp Mole Frac (H2O) | 1.00000 | 1.00000 | 1.00000 | 1.00000 | 1.00000 |
| Comp Mole Frac (Helium) | 0.00000 | 0.00000 | 0.00000 | 0.00000 | 0.00000 |
| Name | 59 | 80 | 63 | 79 | 81 |
| Comp Mole Frac (H2O) | 1.00000 | 1.00000 * | 0.00000 | 0.00000 | 0.00000 |
| Comp Mole Frac (Helium) | 0.00000 | 0.00000 * | 1.00000 | 1.00000 | 1.00000 |
| Name | 82 | 83 | 84 | 85 | |
| Comp Mole Frac (H2O) | 0.00000 | 0.00000 | 0.00000 * | 0.00000 | |
| Comp Mole Frac (Helium) | 1.00000 | 1.00000 | 1.00000 * | 1.00000 | |

## Energy Streams

| Name | HT Heat Loss | HP Trbn Pwr | IT Trbn Stg 1 Pwr | ITTrbn Stg 2 Pwr | Boiler Feed Pump Pw |
|---|---|---|---|---|---|
| Heat Flow (kW) | 1.804e+004 | 7.296e+004 | 5.290e+004 | 4.007e+004 | 9044 |
| Name | LP Trb Stg 1 Pwr | Bstr Pmp Pwr | LP Trbn Stg 2 Pwr | LP Trbn Stg 3 Pwr | LP Trbn Stg 4 Pwr |
| Heat Flow (kW) | 3.442e+004 | 1216 | 1.618e+004 | 1.690e+004 | 1.717e+004 |
| Name | LP Trg Stg 5 Pwr | Cond Q | BF Pmp Pwr | Cnd Pmp Pwr | Reactor Heat |
| Heat Flow (kW) | 3.123e+004 | 3.882e+005 | 1.052e+004 | 102.4 | 6.787e+005 |
| Name | Circ Pwr | | | | |
| Heat Flow (kW) | 6614 | | | | |

## Expanders

| Name | High Pressure Turbin | Intermdiate Pressure | Intermediatte Pressu | Boiler Feed Pump Tu | Low Pressure Turbin |
|---|---|---|---|---|---|
| Feed Pressure (MPa) | 23.79 | 4.440 | 1.977 | 0.9804 | 0.9804 |
| Product Pressure (MPa) | 4.929 * | 1.977 * | 0.9804 * | 8.466e-003 * | 0.3503 * |
| Molar Flow (kgmole/s) | 14.07 | 12.68 | 11.85 | 0.7504 | 10.34 |
| Energy (kW) | 7.296e+004 | 5.290e+004 | 4.007e+004 | 9044 | 3.442e+004 |
| Adiabatic Efficiency | 77 * | 86 * | 93 * | 80 * | 75 * |
| Polytropic Efficiency | 74 | 85 | 92 | 77 | 73 |
| Name | Low Pressure Turbin | Low Pressure Turbin | Low Pressure Turbin | Low Pressure Turbin | |
| Feed Pressure (MPa) | 0.3503 | 0.1986 | 9.949e-002 | 4.344e-002 | |
| Product Pressure (MPa) | 0.1986 * | 9.949e-002 * | 4.344e-002 * | 6.773e-003 * | |
| Molar Flow (kgmole/s) | 9.946 | 9.558 | 9.161 | 8.594 | |
| Energy (kW) | 1.618e+004 | 1.690e+004 | 1.717e+004 | 3.123e+004 | |
| Adiabatic Efficiency | 75 * | 75 * | 75 * | 75 * | |
| Polytropic Efficiency | 74 | 73 | 74 | 74 | |

Hyprotech Ltd. HYSYS.Plant v2.2.2 (Build 3806) Page 5 of 10

Licensed to: INL

* Specified by user.

| | | |
|---|---|---|
| HYPROTECH | INL<br>Calgary, Alberta<br>CANADA | Case Name: C:\Documents and Settings\mgq\Desktop\NGNP\FY 09 Report\Rankine<br>Unit Set: NGNP<br>Date/Time: Tue Feb 02 15:24:12 2010 |

# Workbook: Case (Main) (continued)

## Pumps

| Name | | Boiler Feed Pump | Booster Pump | Condensate Pump | | |
|---|---|---|---|---|---|---|
| Delta P | (MPa) | 26.06 | 3.270 | 0.3967 | | |
| Energy | (kW) | 1.052e+004 | 1216 | 102.4 | | |
| Feed Pressure | (MPa) | 3.241 | 0.3500 * | 6.773e-003 | | |
| Product Pressure | (MPa) | 29.30 * | 3.620 * | 0.4034 | | |
| Molar Flow | (kgmole/s) | 14.25 | 14.25 | 10.75 | | |
| Adiabatic Efficiency | (%) | 75.00 * | 75.00 * | 75.00 * | | |

## Heat Exchangers

| Name | | Feedwater Heater 7 | Feedwater Heater 6 | Feedwater Heater 5 | Feedwater Heater 3 | Feedwater Heater 2 |
|---|---|---|---|---|---|---|
| Duty | (kW) | 5.186e+004 | 4.212e+004 | 4.516e+004 | 1.701e+004 | 1.799e+004 |
| Tube Inlet Temperature | (C) | 213.1 | 172.3 | 133.9 | 91.99 | 70.68 |
| Tube Outlet Temperature | (C) | 254.1 | 206.6 * | 172.3 | 112.0 | 91.99 |
| Shell Inlet Temperature | (C) | 284.3 | 212.2 | 179.2 | 176.7 | 99.45 |
| Shell Outlet Temperature | (C) | 218.7 | 182.5 * | 140.7 * | 97.54 | 76.23 |
| UA | (W/C) | 2.295e+006 | 2.675e+006 | 2.585e+006 | 1.074e+006 | 1.234e+006 |
| LMTD | (C) | 22.60 | 15.74 | 17.47 | 15.85 | 14.57 |
| Duty | (kW) | 5.186e+004 | 4.212e+004 | 4.516e+004 | 1.701e+004 | 1.799e+004 |
| Name | | Feedwater Heater 1 | SPE | | | |
| Duty | (kW) | 2.931e+004 | 432.9 | | | |
| Tube Inlet Temperature | (C) | 35.66 | 35.14 | | | |
| Tube Outlet Temperature | (C) | 70.68 | 35.66 | | | |
| Shell Inlet Temperature | (C) | 77.90 | 345.2 | | | |
| Shell Outlet Temperature | (C) | 41.22 | 62.92 | | | |
| UA | (W/C) | 1.648e+006 | 3464 | | | |
| LMTD | (C) | 17.79 | 125.0 | | | |
| Duty | (kW) | 2.931e+004 | 432.9 | | | |

## LNGs

| Name | | Steam Generator | Reheater | | | |
|---|---|---|---|---|---|---|
| Number of Sides | | 2 * | 2 * | | | |
| LMTD | (C) | 107.6 * | 113.9 * | | | |
| UA (Calculated) | (W/C) | 5.100e+006 | 1.197e+006 | | | |
| Hot Pinch Temperature | (C) | 335.5 | 334.3 | | | |
| Cold Pinch Temperature | (C) | 285.5 | 284.3 | | | |
| Exchanger Cold Duty | (kW) | 5.490e+005 | 1.364e+005 | | | |

## Coolers

| Name | | HT Pressure Loss | Condenser | | | |
|---|---|---|---|---|---|---|
| Duty | (kW) | 1.804e+004 | 3.882e+005 | | | |
| Feed Temperature | (C) | 537.8 | 38.63 | | | |
| Product Temperature | (C) | 514.4 | 34.16 | | | |

## Unit Ops

| Operation Name | Operation Type | Feeds | Products | Ignored | Calc. Level |
|---|---|---|---|---|---|
| T1 | Tee | Steam Generator Out | 1o | No | 500.0 * |
| | | | 2o | | |
| | | | 1 | | |
| | | | To HP Turbine | | |
| T2 | Tee | 2 | 3o | No | 500.0 * |
| | | | 4o | | |
| | | | 5 | | |
| | | | 3 | | |
| T3 | Tee | 4 | 5o | No | 500.0 * |
| | | | 6o | | |

| | |
|---|---|
| INL<br>Calgary, Alberta<br>CANADA | Case Name: C:\Documents and Settings\mgq\Desktop\NGNP\FY 09 Report\Rankine<br>Unit Set: NGNP<br>Date/Time: Tue Feb 02 15:24:12 2010 |

## Workbook: Case (Main) (continued)

### Unit Ops (continued)

| Operation Name | Operation Type | Feeds | Products | Ignored | Calc. Level |
|---|---|---|---|---|---|
| T3 | Tee | | 6 | No | 500.0 * |
| T4 | Tee | 7 | To Reheater<br>To FW Heater 7 | No | 500.0 * |
| T5 | Tee | 9 | 7o<br>12 | No | 500.0 * |
| T6 | Tee | 13 | 14<br>15 | No | 500.0 * |
| T7 | Tee | 18 | 19<br>8o<br>21<br>22 | No | 500.0 * |
| T8 | Tee | 24 | 25<br>26 | No | 500.0 * |
| T9 | Tee | 43 | 44<br>45 | No | 500.0 * |
| T10 | Tee | 47 | 51<br>52 | No | 500.0 * |
| T11 | Tee | 53 | 54<br>55 | No | 500.0 * |
| T12 | Tee | 65 | 66<br>67<br>68 | No | 500.0 * |
| T13 | Tee | 84 | 79<br>63 | No | 500.0 * |
| HT Pressure Loss | Cooler | To HP Turbine | 2<br>HT Heat Loss | No | 500.0 * |
| Condenser | Cooler | 76 | 78<br>Cond Q | No | 500.0 * |
| High Pressure Turbine | Expander | 3 | 4<br>HP Trbn Pwr | No | 500.0 * |
| Intermdiate Pressure Turbine | Expander | 12 | 13<br>IT Trbn Stg 1 Pwr | No | 500.0 * |
| Intermediatte Pressure Turbi | Expander | 15 | 18<br>ITTrbn Stg 2 Pwr | No | 500.0 * |
| Boiler Feed Pump Turbine | Expander | 19 | 9o<br>Boiler Feed Pump Pwr | No | 500.0 * |
| Low Pressure Turbine Stage | Expander | 21 | 24<br>LP Trb Stg 1 Pwr | No | 500.0 * |
| Low Pressure Turbine Stage | Expander | 25 | 43<br>LP Trbn Stg 2 Pwr | No | 500.0 * |
| Low Pressure Turbine Stage | Expander | 44 | 47<br>LP Trbn Stg 3 Pwr | No | 500.0 * |
| Low Pressure Turbine Stage | Expander | 51 | 53<br>LP Trbn Stg 4 Pwr | No | 500.0 * |
| Low Pressure Turbine Stage | Expander | 54 | 64<br>LP Trg Stg 5 Pwr | No | 500.0 * |
| M1 | Mixer | 6<br>30 | 7 | No | 500.0 * |
| M2 | Mixer | 8<br>29 | 9 | No | 500.0 * |
| M3 | Mixer | 31<br>34<br>14 | 16 | No | 500.0 * |
| M4 | Mixer | 22 | 20 | No | 500.0 * |

Hyprotech Ltd. HYSYS.Plant v2.2.2 (Build 3806) Page 7 of 10

Licensed to: INL * Specified by user.

| | | |
|---|---|---|
| INL<br>Calgary, Alberta<br>CANADA | Case Name: | C:\Documents and Settings\mgq\Desktop\NGNP\FY 09 Report\Rankine |
| | Unit Set: | NGNP |
| | Date/Time: | Tue Feb 02 15:24:12 2010 |

## Workbook: Case (Main) (continued)

### Unit Ops (continued)

| Operation Name | Operation Type | Feeds | Products | Ignored | Calc. Level |
|---|---|---|---|---|---|
| M4 | Mixer | 32 | | No | 500.0 * |
| | | 33 | | | |
| | | 23 | | | |
| Deaerating Heater | Mixer | 39 | 40 | No | 500.0 * |
| | | 41 | | | |
| | | 42 | | | |
| M10 | Mixer | 8o | 65 | No | 500.0 * |
| | | 69 | | | |
| | | 70 | | | |
| | | 71 | | | |
| | | 72 | | | |
| M11 | Mixer | 55 | 74 | No | 500.0 * |
| | | 73 | | | |
| | | 37 | | | |
| M12 | Mixer | 75 | 76 | No | 500.0 * |
| | | 64 | | | |
| | | 77 | | | |
| M13 | Mixer | 52 | 36 | No | 500.0 * |
| | | 49 | | | |
| M14 | Mixer | 61 | 58 | No | 500.0 * |
| | | 59 | | | |
| | | 78 | | | |
| M7 | Mixer | 81 | 83 | No | 500.0 * |
| | | 82 | | | |
| Reactor | Heater | 85 | 84 | No | 500.0 * |
| | | Reactor Heat | | | |
| Feedwater Heater 7 | Heat Exchanger | 11 | Steam Generator In | No | 500.0 * |
| | | To FW Heater 7 | 10 | | |
| Feedwater Heater 6 | Heat Exchanger | 35 | 17 | No | 500.0 * |
| | | 16 | 28 | | |
| Feedwater Heater 5 | Heat Exchanger | 27 | 35 | No | 500.0 * |
| | | 20 | 38 | | |
| Feedwater Heater 3 | Heat Exchanger | 48 | 39 | No | 500.0 * |
| | | 45 | 46 | | |
| Feedwater Heater 2 | Heat Exchanger | 57 | 48 | No | 500.0 * |
| | | 36 | 56 | | |
| Feedwater Heater 1 | Heat Exchanger | 62 | 57 | No | 500.0 * |
| | | 74 | 60 | | |
| SPE | Heat Exchanger | 80 | 62 | No | 500.0 * |
| | | 67 | 50 | | |
| Boiler Feed Pump | Pump | 17 | 11 | No | 500.0 * |
| | | BF Pmp Pwr | | | |
| Booster Pump | Pump | 40 | 27 | No | 500.0 * |
| | | Bstr Pmp Pwr | | | |
| Condensate Pump | Pump | 58 | 80 | No | 500.0 * |
| | | Cnd Pmp Pwr | | | |
| VLV 1 | Valve | 1 | 29 | No | 500.0 * |
| VLV 2 | Valve | 5 | 30 | No | 500.0 * |
| VLV 3 | Valve | 1o | 31 | No | 500.0 * |
| VLV 4 | Valve | 3o | 32 | No | 500.0 * |
| VLV 5 | Valve | 5o | 33 | No | 500.0 * |
| VLV 8 | Valve | 38 | 41 | No | 500.0 * |
| VLV 9 | Valve | 26 | 42 | No | 500.0 * |
| VLV 10 | Valve | 46 | 49 | No | 500.0 * |

| | |
|---|---|
| INL<br>Calgary, Alberta<br>CANADA | Case Name: C:\Documents and Settings\mgq\Desktop\NGNP\FY 09 Report\Rankine<br>Unit Set: NGNP<br>Date/Time: Tue Feb 02 15:24:12 2010 |

## Workbook: Case (Main) (continued)

### Unit Ops (continued)

| Operation Name | Operation Type | Feeds | Products | Ignored | Calc. Level |
|---|---|---|---|---|---|
| VLV 11 | Valve | 56 | 37 | No | 500.0 * |
| VLV 12 | Valve | 50 | 61 | No | 500.0 * |
| VLV 22 | Valve | 2o | 69 | No | 500.0 * |
| VLV 21 | Valve | 4o | 70 | No | 500.0 * |
| VLV 19 | Valve | 6o | 71 | No | 500.0 * |
| VLV 20 | Valve | 7o | 72 | No | 500.0 * |
| VLV 14 | Valve | 68 | 73 | No | 500.0 * |
| VLV 16 | Valve | 9o | 75 | No | 500.0 * |
| VLV 15 | Valve | 66 | 77 | No | 500.0 * |
| VLV 18 | Valve | 10 | 34 | No | 500.0 * |
| VLV 17 | Valve | 28 | 23 | No | 500.0 * |
| VLV 13 | Valve | 60 | 59 | No | 500.0 * |
| Steam Generator | LNG | 63<br>Steam Generator In | 81<br>Steam Generator Out | No | 500.0 * |
| Reheater | LNG | 79<br>To Reheater | 82<br>8 | No | 500.0 * |
| Circulator | Compressor | 83<br>Circ Pwr | 85 | No | 500.0 * |
| Efficiency | Spreadsheet | | | No | 500.0 * |

## Spreadsheet: Efficiency

Units Set: NGNP

### CONNECTIONS

#### Imported Variables

| Cell | Object | Variable Description | Value |
|---|---|---|---|
| B1 | Energy Stream: Reactor Heat | Heat Flow | 6.787e+005 kW |
| B2 | Energy Stream: HP Trbn Pwr | Power | 7.296e+004 kW |
| B3 | Energy Stream: IT Trbn Stg 1 Pwr | Power | 5.290e+004 kW |
| B4 | Energy Stream: ITTrbn Stg 2 Pwr | Power | 4.007e+004 kW |
| B5 | Energy Stream: Boiler Feed Pump Pwr | Power | 9044 kW |
| B6 | Energy Stream: LP Trb Stg 1 Pwr | Power | 3.442e+004 kW |
| B7 | Energy Stream: LP Trbn Stg 2 Pwr | Power | 1.618e+004 kW |
| B8 | Energy Stream: LP Trbn Stg 3 Pwr | Power | 1.690e+004 kW |
| B9 | Energy Stream: LP Trbn Stg 4 Pwr | Power | 1.717e+004 kW |
| B10 | Energy Stream: LP Trg Stg 5 Pwr | Power | 3.123e+004 kW |
| D1 | Energy Stream: Circ Pwr | Power | 6614 kW |
| D2 | Energy Stream: Cnd Pmp Pwr | Power | 102.4 kW |
| D3 | Energy Stream: BF Pmp Pwr | Power | 1.052e+004 kW |
| D4 | Energy Stream: Bstr Pmp Pwr | Power | 1216 kW |

#### Exported Variables' Formula Results

| Cell | Object | Variable Description | Value |
|---|---|---|---|

### PARAMETERS

#### Exportable Variables

| Cell | Visible Name | Variable Description | Variable Type | Value |
|---|---|---|---|---|
| D5 | D5: | | Power | 2.724e+005 kW |
| D6 | D6: | | --- | 0.4014 |

#### User Variables

Hyprotech Ltd. HYSYS.Plant v2.2.2 (Build 3806) Page 9 of 10

Licensed to: INL * Specified by user.

HYPROTECH

INL
Calgary, Alberta
CANADA

| | |
|---|---|
| Case Name: | C:\Documents and Settings\mgq\Desktop\NGNP\FY 09 Report\Rankine |
| Unit Set: | NGNP |
| Date/Time: | Tue Feb 02 15:24:12 2010 |

## Spreadsheet: Efficiency (continued)

Units Set: NGNP

### FORMULAS

| Cell | Formula | Result |
|---|---|---|
| D5 | =B2+B3+B4+B5+B6+B7+B8+B9+B10-D2-D3-D4-D1 | 2.724e+005 kW |
| D6 | =D5/B1 | 0.4014 |

### Spreadsheet

| | A | B | C | D | | |
|---|---|---|---|---|---|---|
| 1 | Reactor Heat * | 6.787e+005 kW | Circulator Pwr * | 6614 kW | | |
| 2 | HP Trbn Pwr * | 7.296e+004 kW | Cnd Pmp Pwr * | 102.4 kW | | |
| 3 | IT Trbn Stg 1 Pwr * | 5.290e+004 kW | BF Pmp Pwr * | 1.052e+004 kW | | |
| 4 | IT Trbn Stg 2 Pwr * | 4.007e+004 kW | Bst Pmp Pwr * | 1216 kW | | |
| 5 | BF Pmp Trbn Pwr * | 9044 kW | Total Power Out * | 2.724e+005 kW | | |
| 6 | LP Trbn Stg 1 Pwr * | 3.442e+004 kW | Thermal Efficiency * | 0.4014 | | |
| 7 | LP Trbn Stg 2 Pwr * | 1.618e+004 kW | | | | |
| 8 | LP Trbn Stg 3 Pwr * | 1.690e+004 kW | | | | |
| 9 | LP Trbn Stg 4 Pwr * | 1.717e+004 kW | | | | |
| 10 | LP Trbn Stg 5 Pwr * | 3.123e+004 kW | | | | |

# BRAYTON POWER CYCLE

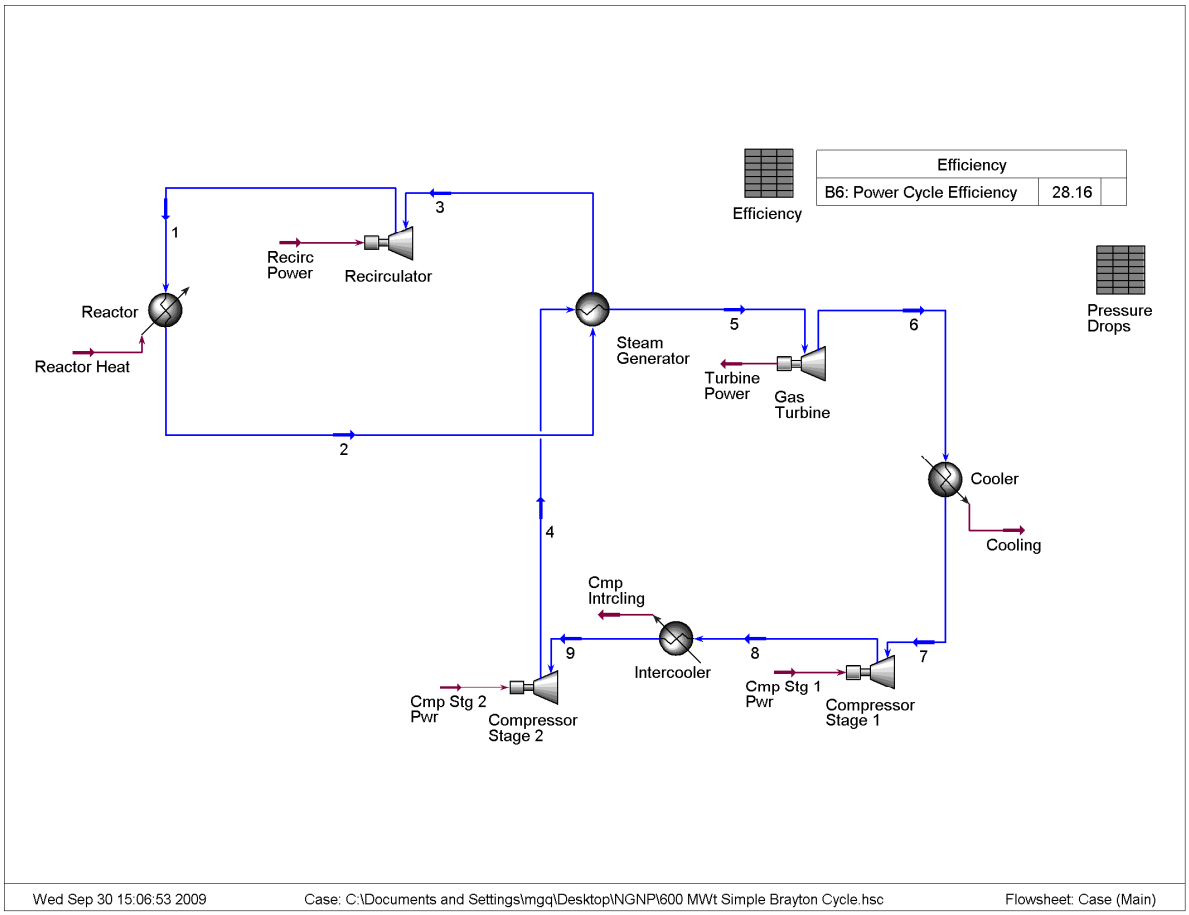

HYPROTECH

INL
Calgary, Alberta
CANADA

| | |
|---|---|
| Case Name: | C:\Documents and Settings\mgq\Desktop\NGNP\600 MWt Simple Bray |
| Unit Set: | NewUser2 |
| Date/Time: | Wed Sep 30 15:17:40 2009 |

# Workbook: Case (Main)

## Streams

| Name | | 1 | 2 | 3 | 4 | 5 |
|---|---|---|---|---|---|---|
| Vapour Fraction | | 1.0000 | 1.0000 | 1.0000 | 1.0000 | 1.0000 |
| Temperature | (F) | 611.60 * | 1382.0 * | 600.19 * | 347.00 | 1346.0 |
| Pressure | (psia) | 1025.4 | 1015.3 * | 1005.1 | 1015.3 * | 1005.1 |
| Molar Flow | (lbmole/hr) | 5.3551e+005 | 5.3551e+005 | 5.3551e+005 | 4.1918e+005 | 4.1918e+005 |
| Mass Flow | (lb/hr) | 2.1436e+006 | 2.1436e+006 | 2.1436e+006 | 1.6780e+006 | 1.6780e+006 |
| Liquid Volume Flow | (barrel/day) | 1.183e+006 | 1.183e+006 | 1.183e+006 | 9.261e+005 | 9.261e+005 |
| Heat Flow | (hp) | 5.654e+005 | 1.370e+006 | 5.533e+005 | 2.262e+005 | 1.043e+006 |
| Molar Enthalpy | (Btu/lbmole) | 2686 | 6509 | 2629 | 1373 | 6330 |
| Name | | 6 | 7 | 8 | 9 | Reactor Heat |
| Vapour Fraction | | 1.0000 | 1.0000 | 1.0000 | 1.0000 | --- |
| Temperature | (F) | 569.24 | 95.000 * | 327.31 | 95.000 * | --- |
| Pressure | (psia) | 197.25 * | 195.28 | 434.78 * | 430.43 | --- |
| Molar Flow | (lbmole/hr) | 4.1918e+005 | 4.1918e+005 | 4.1918e+005 | 4.1918e+005 | --- |
| Mass Flow | (lb/hr) | 1.6780e+006 | 1.6780e+006 | 1.6780e+006 | 1.6780e+006 | --- |
| Liquid Volume Flow | (barrel/day) | 9.261e+005 | 9.261e+005 | 9.261e+005 | 9.261e+005 | --- |
| Heat Flow | (hp) | 4.038e+005 | 1.579e+004 | 2.071e+005 | 1.707e+004 | 8.046e+005 * |
| Molar Enthalpy | (Btu/lbmole) | 2451 | 95.87 | 1257 | 103.6 | --- |
| Name | | Recirc Power | Turbine Power | Cooling | Cmp Intrcling | Cmp Stg 1 Pwr |
| Vapour Fraction | | --- | --- | --- | --- | --- |
| Temperature | (F) | --- | --- | --- | --- | --- |
| Pressure | (psia) | --- | --- | --- | --- | --- |
| Molar Flow | (lbmole/hr) | --- | --- | --- | --- | --- |
| Mass Flow | (lb/hr) | --- | --- | --- | --- | --- |
| Liquid Volume Flow | (barrel/day) | --- | --- | --- | --- | --- |
| Heat Flow | (hp) | 1.205e+004 | 6.391e+005 | 3.880e+005 | 1.900e+005 | 1.913e+005 |
| Molar Enthalpy | (Btu/lbmole) | --- | --- | --- | --- | --- |
| Name | | Cmp Stg 2 Pwr | | | | |
| Vapour Fraction | | --- | | | | |
| Temperature | (F) | --- | | | | |
| Pressure | (psia) | --- | | | | |
| Molar Flow | (lbmole/hr) | --- | | | | |
| Mass Flow | (lb/hr) | --- | | | | |
| Liquid Volume Flow | (barrel/day) | --- | | | | |
| Heat Flow | (hp) | 2.092e+005 | | | | |
| Molar Enthalpy | (Btu/lbmole) | --- | | | | |

## Composition

| Name | 1 | 2 | 3 | 4 | 5 |
|---|---|---|---|---|---|
| Comp Mole Frac (H2O) | 0.00000 | 0.00000 * | 0.00000 | 0.00000 | 0.00000 * |
| Comp Mole Frac (Helium) | 1.00000 | 1.00000 * | 1.00000 | 1.00000 | 1.00000 * |
| Comp Mole Frac (Nitrogen) | 0.00000 | 0.00000 * | 0.00000 | 0.00000 | 0.00000 * |
| Comp Mole Frac (Oxygen) | 0.00000 | 0.00000 * | 0.00000 | 0.00000 | 0.00000 * |
| Comp Mole Frac (Hydrogen) | 0.00000 | 0.00000 * | 0.00000 | 0.00000 | 0.00000 * |
| Name | 6 | 7 | 8 | 9 | |
| Comp Mole Frac (H2O) | 0.00000 | 0.00000 | 0.00000 | 0.00000 | |
| Comp Mole Frac (Helium) | 1.00000 | 1.00000 | 1.00000 | 1.00000 | |
| Comp Mole Frac (Nitrogen) | 0.00000 | 0.00000 | 0.00000 | 0.00000 | |
| Comp Mole Frac (Oxygen) | 0.00000 | 0.00000 | 0.00000 | 0.00000 | |
| Comp Mole Frac (Hydrogen) | 0.00000 | 0.00000 | 0.00000 | 0.00000 | |



Licensed to: INL

* Specified by user.

| | | |
|---|---|---|
| INL<br>Calgary, Alberta<br>CANADA | Case Name: | C:\Documents and Settings\mgq\Desktop\NGNP\600 MWt Simple Bray |
| | Unit Set: | NewUser2 |
| | Date/Time: | Wed Sep 30 15:17:40 2009 |

## Workbook: Case (Main) (continued)

### Coolers

| Name | | Cooler | Intercooler | | | |
|---|---|---|---|---|---|---|
| Duty | (hp) | 3.880e+005 | 1.900e+005 | | | |
| Feed Temperature | (F) | 569.2 | 327.3 | | | |
| Product Temperature | (F) | 95.00 * | 95.00 * | | | |

### Heat Exchangers

| Name | | Steam Generator | | | | |
|---|---|---|---|---|---|---|
| Duty | (hp) | 8.167e+005 | | | | |
| UA | (Btu/F-hr) | 1.867e+007 | | | | |
| LMTD | (F) | 111.3 | | | | |
| Minimum Approach | (F) | 36.00 | | | | |

### Compressors

| Name | | Recirculator | Compressor Stage 1 | Compressor Stage 2 | | |
|---|---|---|---|---|---|---|
| Adiabatic Efficiency | | 75 | 90 * | 90 * | | |
| Polytropic Efficiency | | 75 | 91 | 92 | | |
| Energy | (hp) | 1.205e+004 | 1.913e+005 | 2.092e+005 | | |
| Feed Pressure | (psia) | 1005 | 195.3 | 430.4 | | |
| Product Pressure | (psia) | 1025 | 434.8 * | 1015 * | | |

### Expanders

| Name | | Gas Turbine | | | | |
|---|---|---|---|---|---|---|
| Adiabatic Efficiency | | 90 * | | | | |
| Polytropic Efficiency | | 87 | | | | |
| Feed Pressure | (psia) | 1005 | | | | |
| Product Pressure | (psia) | 197.3 * | | | | |
| Energy | (hp) | 6.391e+005 | | | | |

### Heaters

| Name | | Reactor | | | | |
|---|---|---|---|---|---|---|
| Duty | (hp) | 8.046e+005 * | | | | |
| Feed Temperature | (F) | 611.6 * | | | | |
| Product Temperature | (F) | 1382 * | | | | |

### Unit Ops

| Operation Name | Operation Type | Feeds | Products | Ignored | Calc. Level |
|---|---|---|---|---|---|
| Reactor | Heater | 1<br>Reactor Heat | 2 | No | 500.0 * |
| Recirculator | Compressor | 3<br>Recirc Power | 1 | No | 500.0 * |
| Compressor Stage 1 | Compressor | 7<br>Cmp Stg 1 Pwr | 8 | No | 500.0 * |
| Compressor Stage 2 | Compressor | 9<br>Cmp Stg 2 Pwr | 4 | No | 500.0 * |
| Steam Generator | Heat Exchanger | 4<br>2 | 5<br>3 | No | 500.0 * |
| ADJ-1 | Adjust | | | No | 3500 * |
| Gas Turbine | Expander | 5 | 6<br>Turbine Power | No | 500.0 * |
| Cooler | Cooler | 6 | 7<br>Cooling | No | 500.0 * |
| Intercooler | Cooler | 8 | 9<br>Cmp Intrcling | No | 500.0 * |
| Efficiency | Spreadsheet | | | No | 500.0 * |
| Pressure Drops | Spreadsheet | | | No | 500.0 * |

| | |
|---|---|
| INL<br>Calgary, Alberta<br>CANADA | Case Name: C:\Documents and Settings\mgq\Desktop\NGNP\600 MWt Simple Bray<br>Unit Set: NewUser2<br>Date/Time: Wed Sep 30 15:17:40 2009 |

## Spreadsheet: Efficiency

Units Set: NGNP

### CONNECTIONS

#### Imported Variables

| Cell | Object | Variable Description | Value |
|---|---|---|---|
| B1 | Energy Stream: Reactor Heat | Heat Flow | 6.000e+005 kW |
| B2 | Energy Stream: Recirc Power | Power | 8984 kW |
| B3 | Energy Stream: Turbine Power | Power | 4.766e+005 kW |
| B4 | Energy Stream: Cmp Stg 1 Pwr | Power | 1.427e+005 kW |
| B5 | Energy Stream: Cmp Stg 2 Pwr | Power | 1.560e+005 kW |

#### Exported Variables' Formula Results

| Cell | Object | Variable Description | Value |
|---|---|---|---|

### PARAMETERS

#### Exportable Variables

| Cell | Visible Name | Variable Description | Variable Type | Value |
|---|---|---|---|---|
| B6 | B6: Power Cycle Efficiency | Power Cycle Efficiency | --- | 28.16 |

#### User Variables

### FORMULAS

| Cell | Formula | Result |
|---|---|---|
| B6 | =(-B2+B3-B4-B5)/B1*100 | 28.16 |

#### Spreadsheet

| | A | B | C | D | | |
|---|---|---|---|---|---|---|
| 1 | Reactor Heat * | 6.000e+005 kW * | | | | |
| 2 | Recirc Power * | 8984 kW | | | | |
| 3 | Turbine Power * | 4.766e+005 kW | | | | |
| 4 | Cmp Stg 1 Pwr * | 1.427e+005 kW | | | | |
| 5 | Cmp Stg 2 Pwr * | 1.560e+005 kW | | | | |
| 6 | Power Cycle Efficiency * | 28.16 | | | | |
| 7 | | | | | | |
| 8 | | | | | | |
| 9 | | | | | | |
| 10 | | | | | | |

## Spreadsheet: Pressure Drops

Units Set: NGNP

### CONNECTIONS

#### Imported Variables

| Cell | Object | Variable Description | Value |
|---|---|---|---|
| B1 | Material Stream: 4 | Pressure | 7.0000 MPa |
| B3 | Material Stream: 6 | Pressure | 1.3600 MPa |
| B5 | Material Stream: 8 | Pressure | 2.9977 MPa |

#### Exported Variables' Formula Results

| Cell | Object | Variable Description | Value |
|---|---|---|---|
| B2 | Steam Generator | Tube Side Pressure Drop | 7.000e-002 MPa |
| B4 | Cooler | Pressure Drop | 1.360e-002 MPa |
| B6 | Intercooler | Pressure Drop | 2.998e-002 MPa |

Hyprotech Ltd. HYSYS.Plant v2.2.2 (Build 3806) Page 3 of 4

Licensed to: INL

* Specified by user.

| | |
|---|---|
| INL<br>Calgary, Alberta<br>CANADA | Case Name: C:\Documents and Settings\mgq\Desktop\NGNP\600 MWt Simple Bray<br>Unit Set: NewUser2<br>Date/Time: Wed Sep 30 15:17:40 2009 |

## Spreadsheet: Pressure Drops (continued)

Units Set: NGNP

### PARAMETERS

#### Exportable Variables

| Cell | Visible Name | Variable Description | Variable Type | Value |
|---|---|---|---|---|
| B2 | B2: Tube Side Pressure Drop | Tube Side Pressure Drop | Delta Pressure | 7.000e-002 MPa |
| B4 | B4: Pressure Drop | Pressure Drop | Delta Pressure | 1.360e-002 MPa |
| B6 | B6: Pressure Drop | Pressure Drop | Delta Pressure | 2.998e-002 MPa |
| D1 | D1: | | --- | 1.000e-002 |

#### User Variables

### FORMULAS

| Cell | Formula | Result |
|---|---|---|
| B2 | =D1*B1 | 7.000e-002 MPa |
| B4 | =D1*B3 | 1.360e-002 MPa |
| B6 | =D1*B5 | 2.998e-002 MPa |

### Spreadsheet

| | A | B | C | D | | |
|---|---|---|---|---|---|---|
| 1 | Pres @ 4 * | 7.0000 MPa * | Pressure drop fraction * | 1.000e-002 * | | |
| 2 | Steam Gen dP * | 7.000e-002 MPa | | | | |
| 3 | Pres @ 6 * | 1.3600 MPa * | | | | |
| 4 | Cooler dP * | 1.360e-002 MPa | | | | |
| 5 | Pres @ 8 * | 2.9977 MPa * | | | | |
| 6 | Intclr dP * | 2.998e-002 MPa | | | | |
| 7 | | | | | | |
| 8 | | | | | | |
| 9 | | | | | | |
| 10 | | | | | | |

Hyprotech Ltd. HYSYS.Plant v2.2.2 (Build 3806) Page 4 of 4

Licensed to: INL

* Specified by user.

# BRAYTON HIGH EFFICIENCY CYCLE

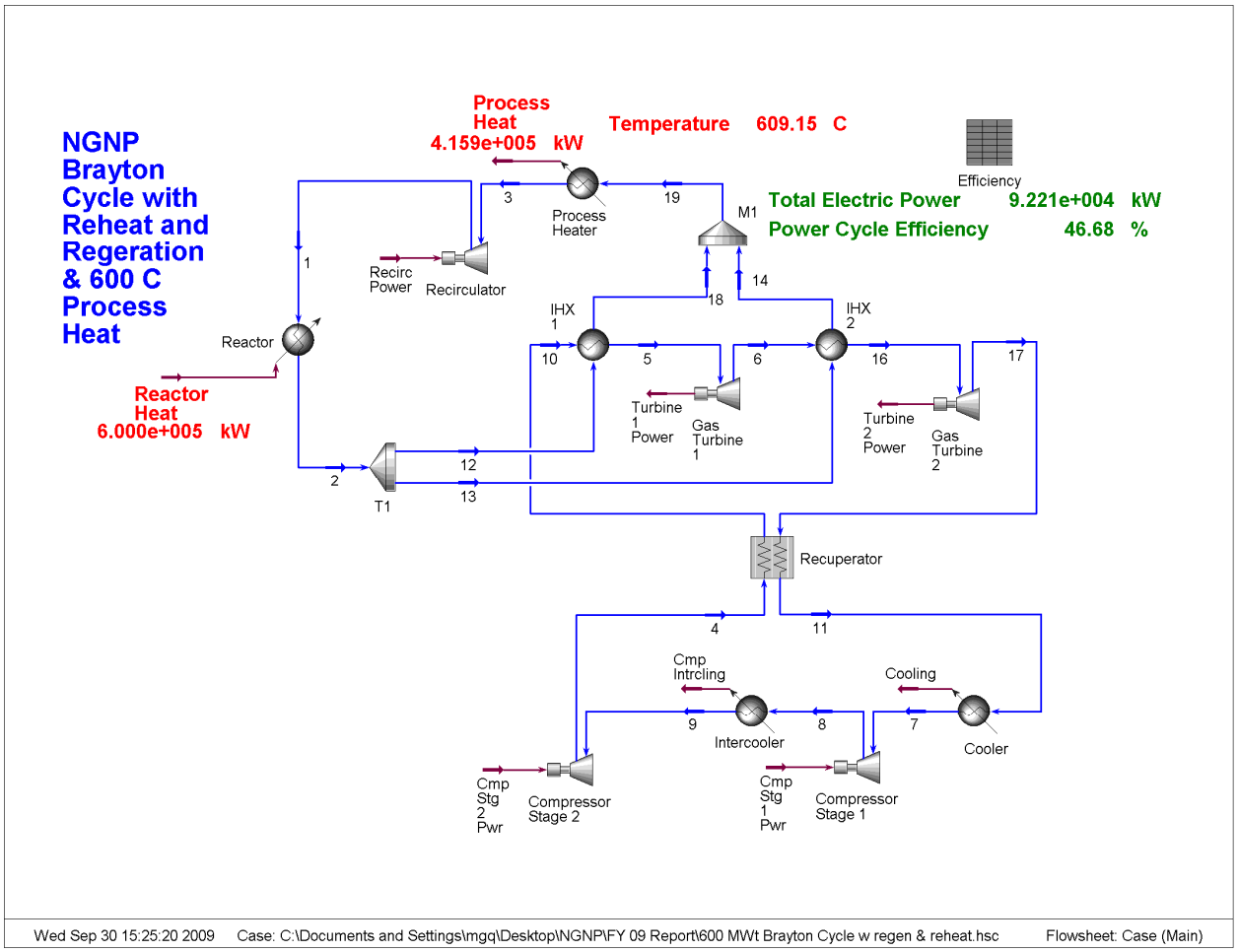

HYPROTECH

INL
Calgary, Alberta
CANADA

| | |
|---|---|
| Case Name: | C:\Documents and Settings\mgq\Desktop\NGNP\FY 09 Report\600 MV |
| Unit Set: | NGNP1 |
| Date/Time: | Wed Sep 30 15:26:10 2009 |

# Workbook: Case (Main)

## Streams

| Name | | 1 | 2 | 3 | 4 | 5 |
|---|---|---|---|---|---|---|
| Vapour Fraction | | 1.0000 | 1.0000 | 1.0000 | 1.0000 | 1.0000 |
| Temperature | (C) | 322.00 | 750.00 * | 312.55 * | 98.792 | 730.00 * |
| Pressure | (MPa) | 7.0700 * | 7.0000 | 6.8607 | 7.0000 * | 6.8607 |
| Molar Flow | (kgmole/h) | 2.4291e+005 | 2.4291e+005 | 2.4291e+005 | 1.2140e+005 | 1.2140e+005 |
| Mass Flow | (kg/s) | 270.10 | 270.10 | 270.10 | 134.99 | 134.99 |
| Liquid Volume Flow | (m3/h) | 7837 | 7837 | 7837 | 3917 | 3917 |
| Heat Flow | (kW) | 4.216e+005 | 1.022e+006 | 4.082e+005 | 5.433e+004 | 4.965e+005 |
| Molar Enthalpy | (kJ/kgmole) | 6248 | 1.514e+004 | 6050 | 1611 | 1.472e+004 |
| Name | | 6 | 7 | 8 | 9 | 11 |
| Vapour Fraction | | 1.0000 | 1.0000 | 1.0000 | 1.0000 | 1.0000 |
| Temperature | (C) | 546.44 | 35.000 * | 104.04 | 35.000 * | 109.19 |
| Pressure | (MPa) | 3.8820 * | 2.9109 | 4.6100 * | 4.5639 | 2.9403 |
| Molar Flow | (kgmole/h) | 1.2140e+005 | 1.2140e+005 | 1.2140e+005 | 1.2140e+005 | 1.2140e+005 |
| Mass Flow | (kg/s) | 134.99 | 134.99 | 134.99 | 134.99 | 134.99 |
| Liquid Volume Flow | (m3/h) | 3917 | 3917 | 3917 | 3917 | 3917 |
| Heat Flow | (kW) | 3.669e+005 | 8108 | 5.713e+004 | 8729 | 6.013e+004 |
| Molar Enthalpy | (kJ/kgmole) | 1.088e+004 | 240.4 | 1694 | 258.8 | 1783 |
| Name | | 12 | 13 | 14 | 16 | 17 |
| Vapour Fraction | | 1.0000 | 1.0000 | 1.0000 | 1.0000 | 1.0000 |
| Temperature | (C) | 750.00 | 750.00 | 566.50 * | 730.00 * | 641.69 |
| Pressure | (MPa) | 7.0000 | 7.0000 | 6.9300 | 3.8432 | 2.9700 * |
| Molar Flow | (kgmole/h) | 1.2145e+005 | 1.2145e+005 | 1.2145e+005 | 1.2140e+005 | 1.2140e+005 |
| Mass Flow | (kg/s) | 135.05 | 135.05 | 135.05 | 134.99 | 134.99 |
| Liquid Volume Flow | (m3/h) | 3919 | 3919 | 3919 | 3917 | 3917 |
| Heat Flow | (kW) | 5.108e+005 | 5.108e+005 | 3.821e+005 | 4.956e+005 | 4.334e+005 |
| Molar Enthalpy | (kJ/kgmole) | 1.514e+004 | 1.514e+004 | 1.133e+004 | 1.470e+004 | 1.285e+004 |
| Name | | 10 | 18 | 19 | Reactor Heat | Recirc Power |
| Vapour Fraction | | 1.0000 | 1.0000 | 1.0000 | --- | --- |
| Temperature | (C) | 631.69 | 651.79 | 609.15 | --- | --- |
| Pressure | (MPa) | 6.9300 | 6.9300 | 6.9300 | --- | --- |
| Molar Flow | (kgmole/h) | 1.2140e+005 | 1.2145e+005 | 2.4291e+005 | --- | --- |
| Mass Flow | (kg/s) | 134.99 | 135.05 | 270.10 | --- | --- |
| Liquid Volume Flow | (m3/h) | 3917 | 3919 | 7837 | --- | --- |
| Heat Flow | (kW) | 4.276e+005 | 4.419e+005 | 8.240e+005 | 6.000e+005 * | 1.340e+004 |
| Molar Enthalpy | (kJ/kgmole) | 1.268e+004 | 1.310e+004 | 1.221e+004 | --- | --- |
| Name | | Cooling | Cmp Intrcling | Cmp Stg 1 Pwr | Cmp Stg 2 Pwr | Turbine 1 Power |
| Vapour Fraction | | --- | --- | --- | --- | --- |
| Temperature | (C) | --- | --- | --- | --- | --- |
| Pressure | (MPa) | --- | --- | --- | --- | --- |
| Molar Flow | (kgmole/h) | --- | --- | --- | --- | --- |
| Mass Flow | (kg/s) | --- | --- | --- | --- | --- |
| Liquid Volume Flow | (m3/h) | --- | --- | --- | --- | --- |
| Heat Flow | (kW) | 5.202e+004 | 4.840e+004 | 4.902e+004 | 4.560e+004 | 1.296e+005 |
| Molar Enthalpy | (kJ/kgmole) | --- | --- | --- | --- | --- |
| Name | | Turbine 2 Power | Process Heat | | | |
| Vapour Fraction | | --- | --- | | | |
| Temperature | (C) | --- | --- | | | |
| Pressure | (MPa) | --- | --- | | | |
| Molar Flow | (kgmole/h) | --- | --- | | | |
| Mass Flow | (kg/s) | --- | --- | | | |
| Liquid Volume Flow | (m3/h) | --- | --- | | | |
| Heat Flow | (kW) | 6.218e+004 | 4.159e+005 | | | |
| Molar Enthalpy | (kJ/kgmole) | --- | --- | | | |

| | | |
|---|---|---|
| HYPROTECH | INL<br>Calgary, Alberta<br>CANADA | Case Name: C:\Documents and Settings\mgq\Desktop\NGNP\FY 09 Report\600 MV<br>Unit Set: NGNP1<br>Date/Time: Wed Sep 30 15:26:10 2009 |

# Workbook: Case (Main) (continued)

## Composition

| Name | 1 | 2 | 3 | 4 | 5 |
|---|---|---|---|---|---|
| Comp Mole Frac (H2O) | 0.00000 | 0.00000 * | 0.00000 | 0.00000 | 0.00000 * |
| Comp Mole Frac (Helium) | 1.00000 | 1.00000 * | 1.00000 | 1.00000 | 1.00000 * |
| Comp Mole Frac (Nitrogen) | 0.00000 | 0.00000 * | 0.00000 | 0.00000 | 0.00000 * |
| Comp Mole Frac (Oxygen) | 0.00000 | 0.00000 * | 0.00000 | 0.00000 | 0.00000 * |
| Comp Mole Frac (Hydrogen) | 0.00000 | 0.00000 * | 0.00000 | 0.00000 | 0.00000 * |

| Name | 6 | 7 | 8 | 9 | 11 |
|---|---|---|---|---|---|
| Comp Mole Frac (H2O) | 0.00000 | 0.00000 | 0.00000 | 0.00000 | 0.00000 |
| Comp Mole Frac (Helium) | 1.00000 | 1.00000 | 1.00000 | 1.00000 | 1.00000 |
| Comp Mole Frac (Nitrogen) | 0.00000 | 0.00000 | 0.00000 | 0.00000 | 0.00000 |
| Comp Mole Frac (Oxygen) | 0.00000 | 0.00000 | 0.00000 | 0.00000 | 0.00000 |
| Comp Mole Frac (Hydrogen) | 0.00000 | 0.00000 | 0.00000 | 0.00000 | 0.00000 |

| Name | 12 | 13 | 14 | 16 | 17 |
|---|---|---|---|---|---|
| Comp Mole Frac (H2O) | 0.00000 * | 0.00000 * | 0.00000 | 0.00000 | 0.00000 |
| Comp Mole Frac (Helium) | 1.00000 * | 1.00000 * | 1.00000 | 1.00000 | 1.00000 |
| Comp Mole Frac (Nitrogen) | 0.00000 * | 0.00000 * | 0.00000 | 0.00000 | 0.00000 |
| Comp Mole Frac (Oxygen) | 0.00000 * | 0.00000 * | 0.00000 | 0.00000 | 0.00000 |
| Comp Mole Frac (Hydrogen) | 0.00000 * | 0.00000 * | 0.00000 | 0.00000 | 0.00000 |

| Name | 10 | 18 | 19 | | |
|---|---|---|---|---|---|
| Comp Mole Frac (H2O) | 0.00000 * | 0.00000 | 0.00000 | | |
| Comp Mole Frac (Helium) | 1.00000 * | 1.00000 | 1.00000 | | |
| Comp Mole Frac (Nitrogen) | 0.00000 * | 0.00000 | 0.00000 | | |
| Comp Mole Frac (Oxygen) | 0.00000 * | 0.00000 | 0.00000 | | |
| Comp Mole Frac (Hydrogen) | 0.00000 * | 0.00000 | 0.00000 | | |

## Compressors

| Name | | Recirculator | Compressor Stage 1 | Compressor Stage 2 | | |
|---|---|---|---|---|---|---|
| Energy | (kW) | 1.340e+004 | 4.902e+004 | 4.560e+004 | | |
| Adiabatic Efficiency | | 75 * | 90 * | 90 * | | |
| Polytropic Efficiency | | 75 | 91 | 91 | | |

## Turbines

| Name | | Gas Turbine 1 | Gas Turbine 2 | | | |
|---|---|---|---|---|---|---|
| Energy | (kW) | 1.296e+005 | 6.218e+004 | | | |
| Adiabatic Efficiency | | 90 * | 90 * | | | |
| Polytropic Efficiency | | 89 | 90 | | | |

## Coolers

| Name | | Cooler | Intercooler | Process Heater | | |
|---|---|---|---|---|---|---|
| Duty | (kW) | 5.202e+004 | 4.840e+004 | 4.159e+005 | | |

## Heaters

| Name | | Reactor | | | | |
|---|---|---|---|---|---|---|
| Duty | (kW) | 6.000e+005 * | | | | |

## Heat Exchangers

| Name | | IHX 1 | IHX 2 | | | |
|---|---|---|---|---|---|---|
| Duty | (kW) | 6.888e+004 | 1.287e+005 | | | |
| UA | (kJ/C-h) | 1.236e+007 | 2.313e+007 | | | |
| LMTD | (C) | 20.05 | 20.03 | | | |
| Minimum Approach | (C) | 20.00 | 20.00 | | | |

Hyprotech Ltd. HYSYS.Plant v2.2.2 (Build 3806) Page 2 of 6

Licensed to: INL

* Specified by user.

| | | |
|---|---|---|
| HYPROTECH | INL<br>Calgary, Alberta<br>CANADA | Case Name: C:\Documents and Settings\mgq\Desktop\NGNP\FY 09 Report\600 MV<br>Unit Set: NGNP1<br>Date/Time: Wed Sep 30 15:26:10 2009 |

# Workbook: Case (Main) (continued)

## Recuperator

| Name | | Recuperator | | | | |
|---|---|---|---|---|---|---|
| Exchanger Cold Duty | (kW) | 3.733e+005 | | | | |
| LMTD | (C) | 10.19 * | | | | |
| UA (Calculated) | (kJ/C-h) | 1.319e+008 | | | | |
| Minimum Approach | (C) | 10.00 | | | | |

## Unit Ops

| Operation Name | Operation Type | Feeds | Products | Ignored | Calc. Level |
|---|---|---|---|---|---|
| Reactor | Heater | 1<br>Reactor Heat | 2 | No | 500.0 * |
| Recirculator | Compressor | 3<br>Recirc Power | 1 | No | 500.0 * |
| Compressor Stage 1 | Compressor | 7<br>Cmp Stg 1 Pwr | 8 | No | 500.0 * |
| Compressor Stage 2 | Compressor | 9<br>Cmp Stg 2 Pwr | 4 | No | 500.0 * |
| IHX 1 | Heat Exchanger | 10<br>12 | 5<br>18 | No | 500.0 * |
| IHX 2 | Heat Exchanger | 6<br>13 | 16<br>14 | No | 500.0 * |
| ADJ-1 | Adjust | | | No | 3500 * |
| ADJ-2 | Adjust | | | No | 3500 * |
| Gas Turbine 1 | Expander | 5 | 6<br>Turbine 1 Power | No | 500.0 * |
| Gas Turbine 2 | Expander | 16 | 17<br>Turbine 2 Power | No | 500.0 * |
| Cooler | Cooler | 11 | 7<br>Cooling | No | 500.0 * |
| Intercooler | Cooler | 8 | 9<br>Cmp Intrcling | No | 500.0 * |
| Process Heater | Cooler | 19 | 3<br>Process Heat | No | 500.0 * |
| Pressure Drops | Spreadsheet | | | No | 500.0 * |
| Efficiency | Spreadsheet | | | No | 500.0 * |
| T1 | Tee | 2 | 12<br>13 | No | 500.0 * |
| M1 | Mixer | 14<br>18 | 19 | No | 500.0 * |
| Recuperator | LNG | 4<br>17 | 10<br>11 | No | 500.0 * |

# Spreadsheet: Efficiency

Units Set: NGNP

## CONNECTIONS

### Imported Variables

| Cell | Object | Variable Description | Value |
|---|---|---|---|
| B1 | Heat Exchanger: IHX 1 | Exchanger Cold Duty | 6.888e+004 kW |
| B2 | Heat Exchanger: IHX 2 | Exchanger Cold Duty | 1.287e+005 kW |
| B4 | Energy Stream: Turbine 1 Power | Power | 1.296e+005 kW |
| B5 | Energy Stream: Turbine 2 Power | Power | 6.218e+004 kW |
| B6 | Energy Stream: Cmp Stg 1 Pwr | Power | 4.902e+004 kW |
| B7 | Energy Stream: Cmp Stg 2 Pwr | Power | 4.560e+004 kW |
| B8 | Energy Stream: Recirc Power | Power | 1.340e+004 kW |

HYPROTECH

INL
Calgary, Alberta
CANADA

| | |
|---|---|
| Case Name: | C:\Documents and Settings\mgq\Desktop\NGNP\FY 09 Report\600 MV |
| Unit Set: | NGNP1 |
| Date/Time: | Wed Sep 30 15:26:10 2009 |

## Spreadsheet: Efficiency (continued)

Units Set: NGNP

### CONNECTIONS

#### Imported Variables

| Cell | Object | Variable Description | Value |
|---|---|---|---|
| D1 | Energy Stream: Reactor Heat | Heat Flow | 6.000e+005 kW |

#### Exported Variables' Formula Results

| Cell | Object | Variable Description | Value |
|---|---|---|---|

### PARAMETERS

#### Exportable Variables

| Cell | Visible Name | Variable Description | Variable Type | Value |
|---|---|---|---|---|
| B3 | B3: Total Heat into Power Cycle | Total Heat into Power Cycle | Energy | 1.975e+005 kW |
| B9 | B9: Total Electric Power | Total Electric Power | Power | 9.221e+004 kW |
| B10 | B10: Power Cycle Efficiency | Power Cycle Efficiency | Percent | 46.68 |
| C5 | C5: | | Energy | 1.975e+005 kW |
| C8 | C8: | | Power | 4410 kW |
| C9 | C9: | | Power | 1.975e+005 kW |
| D2 | D2: Fraction of Reactor Heat for Power Cycle | Fraction of Reactor Heat for Power Cycle | --- | 0.3292 |
| D3 | D3: | | Power | 1.918e+005 kW |
| D4 | D4: | | Power | 9.463e+004 kW |
| D6 | D6: | | --- | -0.5000 |
| D7 | D7: | | --- | 500.0 |

#### User Variables

### FORMULAS

| Cell | Formula | Result |
|---|---|---|
| B3 | =B1+B2 | 1.975e+005 kW |
| B9 | =B4+B5-B6-B7-D2*B8-D7 | 9.221e+004 kW |
| B10 | =B9/B3*100 | 46.68 |
| C5 | =B1+B2 | 1.975e+005 kW |
| C8 | =D2*B8 | 4410 kW |
| C9 | =B9/(B10/100) | 1.975e+005 kW |
| D2 | =B3/D1 | 0.3292 |
| D3 | =B4+B5 | 1.918e+005 kW |
| D4 | =B6+B7 | 9.463e+004 kW |
| D7 | =-D6*1000 | 500.0 |

### Spreadsheet

| | A | B | C | D |
|---|---|---|---|---|
| 1 | IHX 1 Heat * | 6.888e+004 kW | Reactor Heat * | 6.000e+005 kW * |
| 2 | IHX 2 Heat * | 1.287e+005 kW | r Heat for Power Cycle * | 0.3292 |
| 3 | Heat into Power Cycle * | 1.975e+005 kW | Total Turbine * | 1.918e+005 kW |
| 4 | Turbine 1 Power * | 1.296e+005 kW | Total Compressor * | 9.463e+004 kW |
| 5 | Turbine 2 Power * | 6.218e+004 kW | 1.975e+005 kW | |
| 6 | Compressor 1 Power * | 4.902e+004 kW | | -0.5000 * |
| 7 | Compressor 2 Power * | 4.560e+004 kW | Cooling Tower Power * | 500.0 |
| 8 | Recirc Power * | 1.340e+004 kW | 4410 kW | |
| 9 | Total Electric Power * | 9.221e+004 kW | 1.975e+005 kW | |
| 10 | Power Cycle Efficiency * | 46.68 | | |

Hyprotech Ltd. HYSYS.Plant v2.2.2 (Build 3806) Page 4 of 6

Licensed to: INL

* Specified by user.

| | | |
|---|---|---|
| INL<br>Calgary, Alberta<br>CANADA | Case Name: | C:\Documents and Settings\mgq\Desktop\NGNP\FY 09 Report\600 MV |
| | Unit Set: | NGNP1 |
| | Date/Time: | Wed Sep 30 15:26:10 2009 |

## Spreadsheet: Pressure Drops

Units Set: NGNP

### CONNECTIONS

#### Imported Variables

| Cell | Object | Variable Description | Value |
|---|---|---|---|
| B1 | Material Stream: 4 | Pressure | 7.0000 MPa |
| B3 | Material Stream: 10 | Pressure | 6.9300 MPa |
| B5 | Material Stream: 6 | Pressure | 3.8820 MPa |
| B7 | Material Stream: 17 | Pressure | 2.9700 MPa |
| B9 | Material Stream: 11 | Pressure | 2.9403 MPa |
| D3 | Material Stream: 8 | Pressure | 4.6100 MPa |
| D5 | Material Stream: 19 | Pressure | 6.9300 MPa |

#### Exported Variables' Formula Results

| Cell | Object | Variable Description | Value |
|---|---|---|---|
| B2 | Recuperator | Side Pressure Drop (Side Pressure Drop_1) | 7.000e-002 MPa |
| B4 | IHX 1 | Tube Side Pressure Drop | 6.930e-002 MPa |
| B6 | IHX 2 | Tube Side Pressure Drop | 3.882e-002 MPa |
| B8 | Recuperator | Side Pressure Drop (Side Pressure Drop_2) | 2.970e-002 MPa |
| B10 | Cooler | Pressure Drop | 2.940e-002 MPa |
| D4 | Intercooler | Pressure Drop | 4.610e-002 MPa |
| D6 | Process Heater | Pressure Drop | 6.930e-002 MPa |

### PARAMETERS

#### Exportable Variables

| Cell | Visible Name | Variable Description | Variable Type | Value |
|---|---|---|---|---|
| B2 | B2: Side Pressure Drop (Side Pressure Drop_1 | Side Pressure Drop (Side Pressure Drop_1) | Delta Pressure | 7.000e-002 MPa |
| B4 | B4: Tube Side Pressure Drop | Tube Side Pressure Drop | Delta Pressure | 6.930e-002 MPa |
| B6 | B6: Tube Side Pressure Drop | Tube Side Pressure Drop | Delta Pressure | 3.882e-002 MPa |
| B8 | B8: Side Pressure Drop (Side Pressure Drop_2 | Side Pressure Drop (Side Pressure Drop_2) | Delta Pressure | 2.970e-002 MPa |
| B10 | B10: Pressure Drop | Pressure Drop | Delta Pressure | 2.940e-002 MPa |
| D1 | D1: | | --- | 1.000e-002 |
| D4 | D4: Pressure Drop | Pressure Drop | Delta Pressure | 4.610e-002 MPa |
| D6 | D6: Pressure Drop | Pressure Drop | Delta Pressure | 6.930e-002 MPa |
| D7 | D7: | | --- | <empty> |

#### User Variables

### FORMULAS

| Cell | Formula | Result |
|---|---|---|
| B2 | =B1*D1 | 7.000e-002 MPa |
| B4 | =D1*B3 | 6.930e-002 MPa |
| B6 | =D1*B5 | 3.882e-002 MPa |
| B8 | =D1*B7 | 2.970e-002 MPa |
| B10 | =D1*B9 | 2.940e-002 MPa |
| D4 | =D1*D3 | 4.610e-002 MPa |
| D6 | =D5*D1 | 6.930e-002 MPa |

### Spreadsheet

| | A | B | C | D | | |
|---|---|---|---|---|---|---|
| 1 | Prs @ 4 * | 7.0000 MPa * | dP frct * | 1.000e-002 * | | |
| 2 | Rgn Shl dP * | 7.000e-002 MPa | | | | |
| 3 | Prs @ 10 * | 6.9300 MPa | Prs @ 8 * | 4.6100 MPa * | | |
| 4 | StmGn1 tb dP * | 6.930e-002 MPa | IntrClr dP * | 4.610e-002 MPa | | |
| 5 | Prs @ 6 * | 3.8820 MPa * | Prs @ 19 * | 6.9300 MPa | | |
| 6 | StmGn2 tb dP * | 3.882e-002 MPa | Prcs Htr dP * | 6.930e-002 MPa | | |

Hyprotech Ltd. HYSYS.Plant v2.2.2 (Build 3806) Page 5 of 6

Licensed to: INL

* Specified by user.

HYPROTECH

INL
Calgary, Alberta
CANADA

| | |
|---|---|
| Case Name: | C:\Documents and Settings\mgq\Desktop\NGNP\FY 09 Report\600 MV |
| Unit Set: | NGNP1 |
| Date/Time: | Wed Sep 30 15:26:10 2009 |

## Spreadsheet: Pressure Drops (continued)

Units Set: NGNP

### Spreadsheet

| | | | | | | |
|---|---|---|---|---|---|---|
| 7 | Prs @ 17 * | 2.9700 MPa * | | <empty> * | | |
| 8 | Rgn tb dP * | 2.970e-002 MPa | | | | |
| 9 | Prs@ 11 * | 2.9403 MPa | | | | |
| 10 | Clr dP * | 2.940e-002 MPa | | | | |

## COMBINED RANKINE/BRAYTON CYCLE

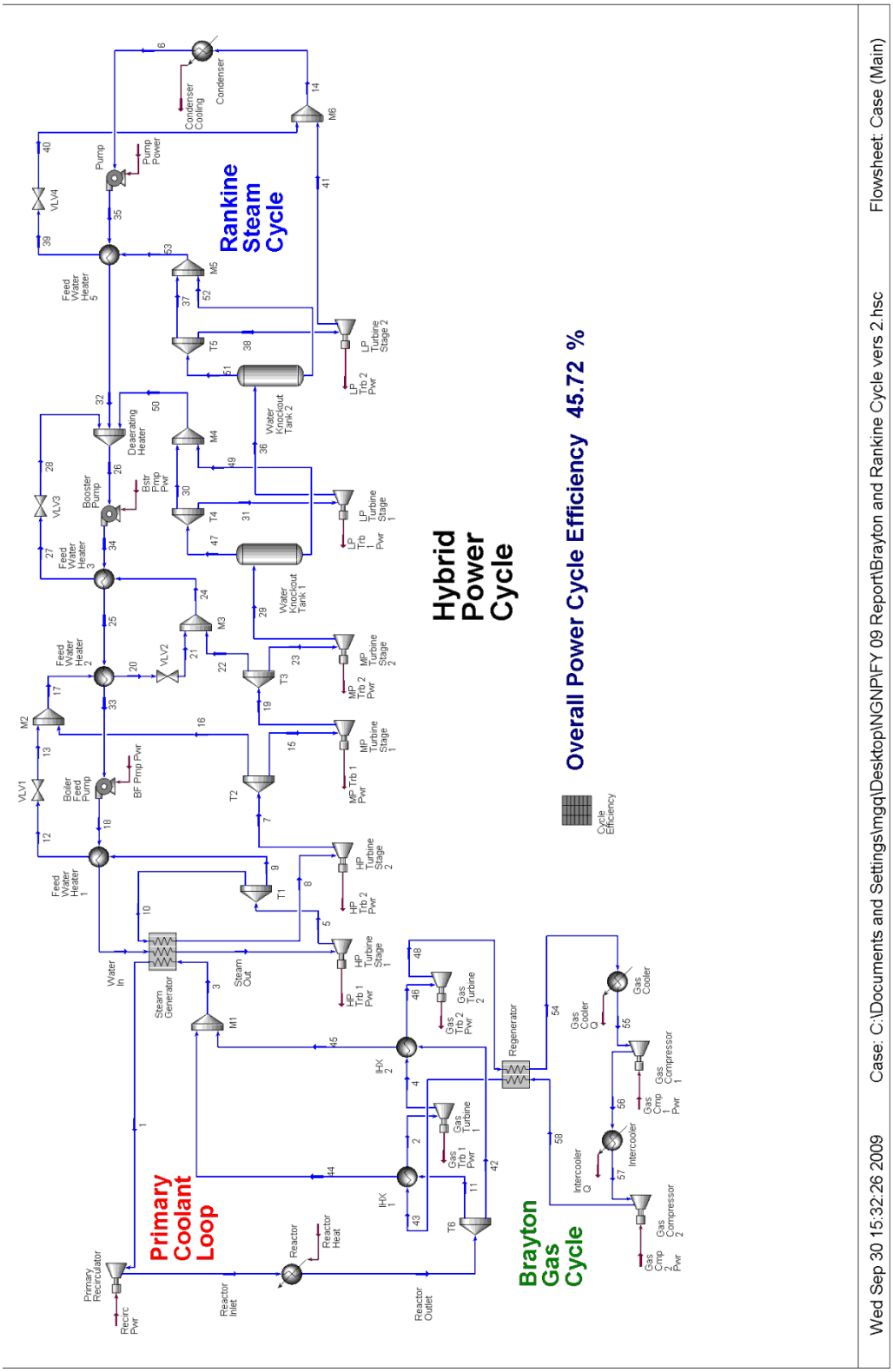

| | |
|---|---|
| INL<br>Calgary, Alberta<br>CANADA | Case Name: C:\Documents and Settings\mgq\Desktop\NGNP\FY 09 Report\Brayton<br>Unit Set: NGNP1<br>Date/Time: Wed Sep 30 15:37:13 2009 |

## Workbook: Case (Main) (continued)

### Streams (continued)

| Name | | 12 | 13 | 14 | 15 | 16 |
|---|---|---|---|---|---|---|
| Vapour Fraction | | 0.0000 | 0.0053 | 0.8605 | 1.0000 | 1.0000 |
| Temperature | (C) | 221.09 | 219.17 | 38.957 | 445.27 | 445.27 |
| Pressure | (MPa) | 4.4367 | 2.2600 | 6.8948e-003 | 2.2600 | 2.2600 |
| Molar Flow | (kgmole/h) | 3063.6 | 3063.6 | 24032 | 27770 | 3206.0 |
| Mass Flow | (kg/s) | 15.331 | 15.331 | 120.26 | 138.97 | 16.044 |
| Liquid Volume Flow | (m3/h) | 55.30 | 55.30 | 433.8 | 501.3 | 57.87 |
| Heat Flow | (kW) | -2.292e+005 | -2.292e+005 | -1.646e+006 | -1.748e+006 | -2.018e+005 |
| Molar Enthalpy | (kJ/kgmole) | -2.693e+005 | -2.693e+005 | -2.466e+005 | -2.266e+005 | -2.266e+005 |

| Name | | 17 | 18 | 19 | 20 | 21 |
|---|---|---|---|---|---|---|
| Vapour Fraction | | 0.6464 | 0.0000 | 1.0000 | 0.0000 | 0.0004 |
| Temperature | (C) | 219.17 | 211.09 | 274.36 | 159.14 | 159.20 |
| Pressure | (MPa) | 2.2600 | 24.482 | 0.60500 * | 2.2540 | 0.60500 |
| Molar Flow | (kgmole/h) | 6269.6 | 34040 | 27770 | 6269.6 | 6269.6 |
| Mass Flow | (kg/s) | 31.374 | 170.34 | 138.97 | 31.374 | 31.374 |
| Liquid Volume Flow | (m3/h) | 113.2 | 614.5 | 501.3 | 113.2 | 113.2 |
| Heat Flow | (kW) | -4.311e+005 | -2.554e+006 | -1.794e+006 | -4.785e+005 | -4.785e+005 |
| Molar Enthalpy | (kJ/kgmole) | -2.475e+005 | -2.701e+005 | -2.326e+005 | -2.747e+005 | -2.747e+005 |

| Name | | 22 | 23 | 24 | 25 | 26 |
|---|---|---|---|---|---|---|
| Vapour Fraction | | 1.0000 | 1.0000 | 0.3194 | 0.0000 | 0.0000 |
| Temperature | (C) | 274.36 | 274.36 | 159.20 | 149.14 | 93.622 |
| Pressure | (MPa) | 0.60500 | 0.60500 | 0.60500 | 15.840 | 8.6582e-002 |
| Molar Flow | (kgmole/h) | 2531.3 | 25239 | 8800.9 | 34040 | 34040 |
| Mass Flow | (kg/s) | 12.667 | 126.30 | 44.041 | 170.34 | 170.34 |
| Liquid Volume Flow | (m3/h) | 45.69 | 455.6 | 158.9 | 614.5 | 614.5 |
| Heat Flow | (kW) | -1.636e+005 | -1.631e+006 | -6.420e+005 | -2.604e+006 | -2.648e+006 |
| Molar Enthalpy | (kJ/kgmole) | -2.326e+005 | -2.326e+005 | -2.626e+005 | -2.754e+005 | -2.800e+005 |

| Name | | 27 | 28 | 29 | 30 | 31 |
|---|---|---|---|---|---|---|
| Vapour Fraction | | 0.0000 | 0.0194 | 0.9939 | 1.0000 | 1.0000 |
| Temperature | (C) | 105.62 | 95.622 | 95.623 | 95.623 | 95.623 |
| Pressure | (MPa) | 0.60315 | 8.6582e-002 | 8.6582e-002 * | 8.6582e-002 | 8.6582e-002 |
| Molar Flow | (kgmole/h) | 8800.9 | 8800.9 | 25239 | 1053.6 | 24032 |
| Mass Flow | (kg/s) | 44.041 | 44.041 | 126.30 | 5.2723 | 120.26 |
| Liquid Volume Flow | (m3/h) | 158.9 | 158.9 | 455.6 | 19.02 | 433.8 |
| Heat Flow | (kW) | -6.823e+005 | -6.823e+005 | -1.675e+006 | -6.985e+004 | -1.593e+006 |
| Molar Enthalpy | (kJ/kgmole) | -2.791e+005 | -2.791e+005 | -2.389e+005 | -2.387e+005 | -2.387e+005 |

| Name | | 32 | 33 | 34 | 35 | 36 |
|---|---|---|---|---|---|---|
| Vapour Fraction | | 0.0000 | 0.0000 | 0.0000 | 0.0000 | 0.9674 |
| Temperature | (C) | 66.035 | 208.95 | 95.621 | 38.788 | 76.033 |
| Pressure | (MPa) | 8.6582e-002 | 15.682 | 16.000 * | 8.7392e-002 | 4.0200e-002 * |
| Molar Flow | (kgmole/h) | 24032 | 34040 | 34040 | 24032 | 24032 |
| Mass Flow | (kg/s) | 120.26 | 170.34 | 170.34 | 120.26 | 120.26 |
| Liquid Volume Flow | (m3/h) | 433.8 | 614.5 | 614.5 | 433.8 | 433.8 |
| Heat Flow | (kW) | -1.884e+006 | -2.557e+006 | -2.644e+006 | -1.898e+006 | -1.607e+006 |
| Molar Enthalpy | (kJ/kgmole) | -2.822e+005 | -2.704e+005 | -2.796e+005 | -2.843e+005 | -2.407e+005 |

| Name | | 37 | 38 | 39 | 40 | 41 |
|---|---|---|---|---|---|---|
| Vapour Fraction | | 1.0000 | 1.0000 | 0.0000 | 0.0179 | 0.9328 |
| Temperature | (C) | 76.033 | 76.033 | 49.046 | 38.954 | 38.955 |
| Pressure | (MPa) | 4.0200e-002 | 4.0200e-002 | 3.9749e-002 | 6.8948e-003 | 6.8948e-003 * |
| Molar Flow | (kgmole/h) | 1115.9 | 22132 | 1899.6 | 1899.6 | 22132 |
| Mass Flow | (kg/s) | 5.5842 | 110.75 | 9.5060 | 9.5060 | 110.75 |
| Liquid Volume Flow | (m3/h) | 20.14 | 399.5 | 34.29 | 34.29 | 399.5 |
| Heat Flow | (kW) | -7.418e+004 | -1.471e+006 | -1.496e+005 | -1.496e+005 | -1.497e+006 |
| Molar Enthalpy | (kJ/kgmole) | -2.393e+005 | -2.393e+005 | -2.835e+005 | -2.835e+005 | -2.435e+005 |

HYPROTECH

INL
Calgary, Alberta
CANADA

| | |
|---|---|
| Case Name: | C:\Documents and Settings\mgq\Desktop\NGNP\FY 09 Report\Braytor |
| Unit Set: | NGNP1 |
| Date/Time: | Wed Sep 30 15:37:13 2009 |

# Workbook: Case (Main) (continued)

## Streams (continued)

| Name | | 47 | 49 | 50 | 51 | 52 |
|---|---|---|---|---|---|---|
| Vapour Fraction | | 1.0000 | 0.0000 | 0.8727 | 1.0000 | 0.0000 |
| Temperature | (C) | 95.623 | 95.623 | 95.623 | 76.033 | 76.033 |
| Pressure | (MPa) | 8.6582e-002 | 8.6582e-002 | 8.6582e-002 | 4.0200e-002 | 4.0200e-002 |
| Molar Flow | (kgmole/h) | 25085 | 153.66 | 1207.2 | 23248 | 783.71 |
| Mass Flow | (kg/s) | 125.53 | 0.76893 | 6.0413 | 116.34 | 3.9219 |
| Liquid Volume Flow | (m3/h) | 452.8 | 2.774 | 21.79 | 419.7 | 14.15 |
| Heat Flow | (kW) | -1.663e+006 | -1.195e+004 | -8.180e+004 | -1.545e+006 | -6.127e+004 |
| Molar Enthalpy | (kJ/kgmole) | -2.387e+005 | -2.799e+005 | -2.439e+005 | -2.393e+005 | -2.814e+005 |

| Name | | 53 | 11 | 42 | 44 | 45 |
|---|---|---|---|---|---|---|
| Vapour Fraction | | 0.5874 | 1.0000 | 1.0000 | 1.0000 | 1.0000 |
| Temperature | (C) | 76.033 | 750.00 | 750.00 | 634.72 | 665.28 * |
| Pressure | (MPa) | 4.0200e-002 | 7.0000 | 7.0000 | 6.9300 | 6.9300 |
| Molar Flow | (kgmole/h) | 1899.6 | 1.2145e+005 | 1.2145e+005 | 1.2145e+005 | 1.2145e+005 |
| Mass Flow | (kg/s) | 9.5060 | 135.05 | 135.05 | 135.05 | 135.05 |
| Liquid Volume Flow | (m3/h) | 34.29 | 3919 | 3919 | 3919 | 3919 |
| Heat Flow | (kW) | -1.354e+005 | 5.108e+005 | 5.108e+005 | 4.300e+005 | 4.514e+005 |
| Molar Enthalpy | (kJ/kgmole) | -2.567e+005 | 1.514e+004 | 1.514e+004 | 1.274e+004 | 1.338e+004 |

| Name | | 2 | 4 | 43 | 46 | 48 |
|---|---|---|---|---|---|---|
| Vapour Fraction | | 1.0000 | 1.0000 | 1.0000 | 1.0000 | 1.0000 |
| Temperature | (C) | 730.00 * | 626.07 | 588.57 | 730.00 * | 608.57 |
| Pressure | (MPa) | 6.8607 | 5.0500 * | 6.9300 | 5.0112 | 3.4900 * |
| Molar Flow | (kgmole/h) | 99040 | 99040 | 99040 | 99040 | 99040 |
| Mass Flow | (kg/s) | 110.13 | 110.13 | 110.13 | 110.13 | 110.13 |
| Liquid Volume Flow | (m3/h) | 3196 | 3196 | 3196 | 3196 | 3196 |
| Heat Flow | (kW) | 4.051e+005 | 3.452e+005 | 3.242e+005 | 4.046e+005 | 3.348e+005 |
| Molar Enthalpy | (kJ/kgmole) | 1.472e+004 | 1.255e+004 | 1.179e+004 | 1.471e+004 | 1.217e+004 |

| Name | | 54 | 55 | 56 | 57 | 58 |
|---|---|---|---|---|---|---|
| Vapour Fraction | | 1.0000 | 1.0000 | 1.0000 | 1.0000 | 1.0000 |
| Temperature | (C) | 104.79 | 35.000 * | 92.129 | 35.000 * | 84.442 |
| Pressure | (MPa) | 3.4546 | 3.4252 | 5.0400 * | 4.9939 | 7.0000 * |
| Molar Flow | (kgmole/h) | 99040 | 99040 | 99040 | 99040 | 99040 |
| Mass Flow | (kg/s) | 110.13 | 110.13 | 110.13 | 110.13 | 110.13 |
| Liquid Volume Flow | (m3/h) | 3196 | 3196 | 3196 | 3196 | 3196 |
| Heat Flow | (kW) | 4.669e+004 | 6772 | 3.993e+004 | 7253 | 3.612e+004 |
| Molar Enthalpy | (kJ/kgmole) | 1697 | 246.2 | 1451 | 263.6 | 1313 |

| Name | | 59 |
|---|---|---|
| Vapour Fraction | | 0.0000 * |
| Temperature | (C) | 95.622 |
| Pressure | (MPa) | 8.6582e-002 |
| Molar Flow | (kgmole/h) | 199.83 |
| Mass Flow | (kg/s) | 1.0000 * |
| Liquid Volume Flow | (m3/h) | 3.607 |
| Heat Flow | (kW) | -1.554e+004 |
| Molar Enthalpy | (kJ/kgmole) | -2.799e+005 |

## Composition

| Name | Reactor Inlet | Reactor Outlet | 1 | 3 | Water In |
|---|---|---|---|---|---|
| Comp Mole Frac (H2O) | 0.00000 * | 0.00000 | 0.00000 | 0.00000 | 1.00000 * |
| Comp Mole Frac (Helium) | 1.00000 * | 1.00000 | 1.00000 | 1.00000 | 0.00000 * |
| Comp Mole Frac (Hydrogen) | 0.00000 * | 0.00000 | 0.00000 | 0.00000 | 0.00000 * |
| Comp Mole Frac (Oxygen) | 0.00000 * | 0.00000 | 0.00000 | 0.00000 | 0.00000 * |
| Comp Mole Frac (Nitrogen) | 0.00000 * | 0.00000 | 0.00000 | 0.00000 | 0.00000 * |

| | | |
|---|---|---|
| INL<br>Calgary, Alberta<br>CANADA | Case Name: | C:\Documents and Settings\mgq\Desktop\NGNP\FY 09 Report\Brayton |
| | Unit Set: | NGNP1 |
| | Date/Time: | Wed Sep 30 15:37:13 2009 |

## Workbook: Case (Main) (continued)

### Composition (continued)

| Name | Steam Out | 5 | 6 | 7 | 8 |
|---|---|---|---|---|---|
| Comp Mole Frac (H2O) | 1.00000 | 1.00000 | 1.00000 | 1.00000 | 1.00000 |
| Comp Mole Frac (Helium) | 0.00000 | 0.00000 | 0.00000 | 0.00000 | 0.00000 |
| Comp Mole Frac (Hydrogen) | 0.00000 | 0.00000 | 0.00000 | 0.00000 | 0.00000 |
| Comp Mole Frac (Oxygen) | 0.00000 | 0.00000 | 0.00000 | 0.00000 | 0.00000 |
| Comp Mole Frac (Nitrogen) | 0.00000 | 0.00000 | 0.00000 | 0.00000 | 0.00000 |
| Name | 9 | 10 | 12 | 13 | 14 |
| Comp Mole Frac (H2O) | 1.00000 | 1.00000 | 1.00000 | 1.00000 | 1.00000 |
| Comp Mole Frac (Helium) | 0.00000 | 0.00000 | 0.00000 | 0.00000 | 0.00000 |
| Comp Mole Frac (Hydrogen) | 0.00000 | 0.00000 | 0.00000 | 0.00000 | 0.00000 |
| Comp Mole Frac (Oxygen) | 0.00000 | 0.00000 | 0.00000 | 0.00000 | 0.00000 |
| Comp Mole Frac (Nitrogen) | 0.00000 | 0.00000 | 0.00000 | 0.00000 | 0.00000 |
| Name | 15 | 16 | 17 | 18 | 19 |
| Comp Mole Frac (H2O) | 1.00000 | 1.00000 | 1.00000 | 1.00000 | 1.00000 |
| Comp Mole Frac (Helium) | 0.00000 | 0.00000 | 0.00000 | 0.00000 | 0.00000 |
| Comp Mole Frac (Hydrogen) | 0.00000 | 0.00000 | 0.00000 | 0.00000 | 0.00000 |
| Comp Mole Frac (Oxygen) | 0.00000 | 0.00000 | 0.00000 | 0.00000 | 0.00000 |
| Comp Mole Frac (Nitrogen) | 0.00000 | 0.00000 | 0.00000 | 0.00000 | 0.00000 |
| Name | 20 | 21 | 22 | 23 | 24 |
| Comp Mole Frac (H2O) | 1.00000 | 1.00000 | 1.00000 | 1.00000 | 1.00000 |
| Comp Mole Frac (Helium) | 0.00000 | 0.00000 | 0.00000 | 0.00000 | 0.00000 |
| Comp Mole Frac (Hydrogen) | 0.00000 | 0.00000 | 0.00000 | 0.00000 | 0.00000 |
| Comp Mole Frac (Oxygen) | 0.00000 | 0.00000 | 0.00000 | 0.00000 | 0.00000 |
| Comp Mole Frac (Nitrogen) | 0.00000 | 0.00000 | 0.00000 | 0.00000 | 0.00000 |
| Name | 25 | 26 | 27 | 28 | 29 |
| Comp Mole Frac (H2O) | 1.00000 | 1.00000 | 1.00000 | 1.00000 | 1.00000 |
| Comp Mole Frac (Helium) | 0.00000 | 0.00000 | 0.00000 | 0.00000 | 0.00000 |
| Comp Mole Frac (Hydrogen) | 0.00000 | 0.00000 | 0.00000 | 0.00000 | 0.00000 |
| Comp Mole Frac (Oxygen) | 0.00000 | 0.00000 | 0.00000 | 0.00000 | 0.00000 |
| Comp Mole Frac (Nitrogen) | 0.00000 | 0.00000 | 0.00000 | 0.00000 | 0.00000 |
| Name | 30 | 31 | 32 | 33 | 34 |
| Comp Mole Frac (H2O) | 1.00000 | 1.00000 | 1.00000 | 1.00000 | 1.00000 |
| Comp Mole Frac (Helium) | 0.00000 | 0.00000 | 0.00000 | 0.00000 | 0.00000 |
| Comp Mole Frac (Hydrogen) | 0.00000 | 0.00000 | 0.00000 | 0.00000 | 0.00000 |
| Comp Mole Frac (Oxygen) | 0.00000 | 0.00000 | 0.00000 | 0.00000 | 0.00000 |
| Comp Mole Frac (Nitrogen) | 0.00000 | 0.00000 | 0.00000 | 0.00000 | 0.00000 |
| Name | 35 | 36 | 37 | 38 | 39 |
| Comp Mole Frac (H2O) | 1.00000 | 1.00000 | 1.00000 | 1.00000 | 1.00000 |
| Comp Mole Frac (Helium) | 0.00000 | 0.00000 | 0.00000 | 0.00000 | 0.00000 |
| Comp Mole Frac (Hydrogen) | 0.00000 | 0.00000 | 0.00000 | 0.00000 | 0.00000 |
| Comp Mole Frac (Oxygen) | 0.00000 | 0.00000 | 0.00000 | 0.00000 | 0.00000 |
| Comp Mole Frac (Nitrogen) | 0.00000 | 0.00000 | 0.00000 | 0.00000 | 0.00000 |
| Name | 40 | 41 | 47 | 49 | 50 |
| Comp Mole Frac (H2O) | 1.00000 | 1.00000 | 1.00000 | 1.00000 | 1.00000 |
| Comp Mole Frac (Helium) | 0.00000 | 0.00000 | 0.00000 | 0.00000 | 0.00000 |
| Comp Mole Frac (Hydrogen) | 0.00000 | 0.00000 | 0.00000 | 0.00000 | 0.00000 |
| Comp Mole Frac (Oxygen) | 0.00000 | 0.00000 | 0.00000 | 0.00000 | 0.00000 |
| Comp Mole Frac (Nitrogen) | 0.00000 | 0.00000 | 0.00000 | 0.00000 | 0.00000 |
| Name | 51 | 52 | 53 | 11 | 42 |
| Comp Mole Frac (H2O) | 1.00000 | 1.00000 | 1.00000 | 0.00000 | 0.00000 |
| Comp Mole Frac (Helium) | 0.00000 | 0.00000 | 0.00000 | 1.00000 | 1.00000 |
| Comp Mole Frac (Hydrogen) | 0.00000 | 0.00000 | 0.00000 | 0.00000 | 0.00000 |
| Comp Mole Frac (Oxygen) | 0.00000 | 0.00000 | 0.00000 | 0.00000 | 0.00000 |
| Comp Mole Frac (Nitrogen) | 0.00000 | 0.00000 | 0.00000 | 0.00000 | 0.00000 |

| | | |
|---|---|---|
| HYPROTECH | INL<br>Calgary, Alberta<br>CANADA | Case Name: C:\Documents and Settings\mgq\Desktop\NGNP\FY 09 Report\Brayton<br>Unit Set: NGNP1<br>Date/Time: Wed Sep 30 15:37:13 2009 |

# Workbook: Case (Main) (continued)

## Composition (continued)

| Name | 44 | 45 | 2 | 4 | 43 |
|---|---|---|---|---|---|
| Comp Mole Frac (H2O) | 0.00000 | 0.00000 | 0.00000 * | 0.00000 | 0.00000 |
| Comp Mole Frac (Helium) | 1.00000 | 1.00000 | 1.00000 * | 1.00000 | 1.00000 |
| Comp Mole Frac (Hydrogen) | 0.00000 | 0.00000 | 0.00000 * | 0.00000 | 0.00000 |
| Comp Mole Frac (Oxygen) | 0.00000 | 0.00000 | 0.00000 * | 0.00000 | 0.00000 |
| Comp Mole Frac (Nitrogen) | 0.00000 | 0.00000 | 0.00000 * | 0.00000 | 0.00000 |

| Name | 46 | 48 | 54 | 55 | 56 |
|---|---|---|---|---|---|
| Comp Mole Frac (H2O) | 0.00000 | 0.00000 | 0.00000 | 0.00000 | 0.00000 |
| Comp Mole Frac (Helium) | 1.00000 | 1.00000 | 1.00000 | 1.00000 | 1.00000 |
| Comp Mole Frac (Hydrogen) | 0.00000 | 0.00000 | 0.00000 | 0.00000 | 0.00000 |
| Comp Mole Frac (Oxygen) | 0.00000 | 0.00000 | 0.00000 | 0.00000 | 0.00000 |
| Comp Mole Frac (Nitrogen) | 0.00000 | 0.00000 | 0.00000 | 0.00000 | 0.00000 |

| Name | 57 | 58 | 59 |
|---|---|---|---|
| Comp Mole Frac (H2O) | 0.00000 | 0.00000 | 1.00000 * |
| Comp Mole Frac (Helium) | 1.00000 | 1.00000 | 0.00000 * |
| Comp Mole Frac (Hydrogen) | 0.00000 | 0.00000 | 0.00000 * |
| Comp Mole Frac (Oxygen) | 0.00000 | 0.00000 | 0.00000 * |
| Comp Mole Frac (Nitrogen) | 0.00000 | 0.00000 | 0.00000 * |

## LNGs

| Name | | Steam Generator | Regenerator |
|---|---|---|---|
| Exchanger Cold Duty | (kW) | 4.732e+005 | 2.881e+005 |
| UA (Calculated) | (kJ/C-h) | 2.089e+007 | 5.144e+007 |
| LMTD | (C) | 81.56 * | 20.16 * |
| Minimum Approach | (C) | 50.00 | 20.00 |

## Heaters

| Name | | Reactor |
|---|---|---|
| Duty | (kW) | 6.000e+005 * |

## Heat Exchangers

| Name | | Feed Water Heater 1 | Feed Water Heater 2 | Feed Water Heater 3 | Feed Water Heater 5 | IHX 2 |
|---|---|---|---|---|---|---|
| Duty | (kW) | 3.004e+004 | 4.741e+004 | 4.027e+004 | 1.417e+004 | 5.942e+004 |
| UA | (kJ/C-h) | 4.435e+006 | 6.224e+006 | 5.886e+006 | 2.561e+006 | 7.497e+006 |
| LMTD | (C) | 24.38 | 27.42 | 24.63 | 19.92 | 28.53 |
| Minimum Approach | (C) | 10.00 | 10.00 | 10.00 | 9.999 | 20.00 |

| Name | | IHX 1 |
|---|---|---|
| Duty | (kW) | 8.084e+004 |
| UA | (kJ/C-h) | 9.305e+006 |
| LMTD | (C) | 31.28 |
| Minimum Approach | (C) | 20.00 |

## Coolers

| Name | | Condenser | Gas Cooler | Intercooler |
|---|---|---|---|---|
| Duty | (kW) | 2.516e+005 | 3.992e+004 | 3.267e+004 |

## Pumps

| Name | | Pump | Boiler Feed Pump | Booster Pump |
|---|---|---|---|---|
| Delta P | (kPa) | 80.57 | 8800 | 1.591e+004 |
| Energy | (kW) | 12.96 | 2317 | 3772 |
| Feed Pressure | (MPa) | 6.826e-003 | 15.68 | 8.658e-002 |
| Product Pressure | (MPa) | 8.739e-002 | 24.48 | 16.00 * |
| Molar Flow | (kgmole/h) | 2.403e+004 | 3.404e+004 | 3.404e+004 |

| | | |
|---|---|---|
| HYPROTECH | INL<br>Calgary, Alberta<br>CANADA | Case Name: C:\Documents and Settings\mgq\Desktop\NGNP\FY 09 Report\Braytor<br>Unit Set: NGNP1<br>Date/Time: Wed Sep 30 15:37:13 2009 |

# Workbook: Case (Main) (continued)

## Expanders

| Name | | HP Turbine Stage 1 | HP Turbine Stage 2 | MP Turbine Stage 1 | MP Turbine Stage 2 | LP Turbine Stage 1 |
|---|---|---|---|---|---|---|
| Feed Pressure | (MPa) | 24.00 | 4.437 | 2.260 | 0.6050 | 8.658e-002 |
| Product Pressure | (MPa) | 4.500 * | 2.260 * | 0.6050 * | 8.658e-002 * | 4.020e-002 * |
| Molar Flow | (kgmole/h) | 3.404e+004 | 3.098e+004 | 2.777e+004 | 2.524e+004 | 2.403e+004 |
| Energy | (kW) | 6.616e+004 | 3.217e+004 | 4.604e+004 | 4.424e+004 | 1.341e+004 |
| Adiabatic Efficiency | | 90 * | 90 * | 90 * | 90 * | 90 * |
| Polytropic Efficiency | | 88 | 89 | 88 | 89 | 90 |

| Name | | LP Turbine Stage 2 | Gas Turbine 1 | Gas Turbine 2 | | |
|---|---|---|---|---|---|---|
| Feed Pressure | (MPa) | 4.020e-002 | 6.861 | 5.011 | | |
| Product Pressure | (MPa) | 6.895e-003 * | 5.050 * | 3.490 * | | |
| Molar Flow | (kgmole/h) | 2.213e+004 | 9.904e+004 | 9.904e+004 | | |
| Energy | (kW) | 2.563e+004 | 5.987e+004 | 6.982e+004 | | |
| Adiabatic Efficiency | | 90 * | 90 * | 90 * | | |
| Polytropic Efficiency | | 90 | 89 | 89 | | |

## Compressors

| Name | | Primary Recirculator | Gas Compressor 1 | Gas Compressor 2 | | |
|---|---|---|---|---|---|---|
| Feed Pressure | (MPa) | 6.860 | 3.425 | 4.994 | | |
| Product Pressure | (MPa) | 7.070 * | 5.040 * | 7.000 * | | |
| Molar Flow | (kgmole/h) | 2.429e+005 | 9.904e+004 | 9.904e+004 | | |
| Energy | (kW) | 1.344e+004 | 3.316e+004 | 2.887e+004 | | |
| Adiabatic Efficiency | | 75 * | 90 * | 90 * | | |
| Polytropic Efficiency | | 75 | 91 | 91 | | |

## Unit Ops

| Operation Name | Operation Type | Feeds | Products | Ignored | Calc. Level |
|---|---|---|---|---|---|
| Reactor | Heater | Reactor Inlet<br>Reactor Heat | Reactor Outlet | No | 500.0 * |
| Primary Recirculator | Compressor | 1<br>Recirc Pwr | Reactor Inlet | No | 500.0 * |
| Gas Compressor 1 | Compressor | 55<br>Gas Cmp 1 Pwr | 56 | No | 500.0 * |
| Gas Compressor 2 | Compressor | 57<br>Gas Cmp 2 Pwr | 58 | No | 500.0 * |
| Steam Generator | LNG | 3<br>Water In<br>10 | 1<br>Steam Out<br>8 | No | 500.0 * |
| Regenerator | LNG | 48<br>58 | 54<br>43 | No | 500.0 * |
| ADJ-1 | Adjust | | | No | 3500 * |
| ADJ-3 | Adjust | | | No | 3500 * |
| ADJ-2 | Adjust | | | No | 3500 * |
| ADJ-4 | Adjust | | | No | 3500 * |
| HP Turbine Stage 1 | Expander | Steam Out | 5<br>HP Trb 1 Pwr | No | 500.0 * |
| HP Turbine Stage 2 | Expander | 8 | 7<br>HP Trb 2 Pwr | No | 500.0 * |
| MP Turbine Stage 1 | Expander | 15 | 19<br>MP Trb 1 Pwr | No | 500.0 * |
| MP Turbine Stage 2 | Expander | 23 | 29<br>MP Trb 2 Pwr | No | 500.0 * |
| LP Turbine Stage 1 | Expander | 31 | 36<br>LP Trb 1 Pwr | No | 500.0 * |
| LP Turbine Stage 2 | Expander | 38 | 41<br>LP Trb 2 Pwr | No | 500.0 * |

Hyprotech Ltd. HYSYS.Plant v2.2.2 (Build 3806) Page 6 of 9

Licensed to: INL

* Specified by user.

| | | |
|---|---|---|
| HYPROTECH | INL<br>Calgary, Alberta<br>CANADA | Case Name: C:\Documents and Settings\mgq\Desktop\NGNP\FY 09 Report\Braytor<br>Unit Set: NGNP1<br>Date/Time: Wed Sep 30 15:37:13 2009 |

## Workbook: Case (Main) (continued)

### Unit Ops (continued)

| Operation Name | Operation Type | Feeds | Products | Ignored | Calc. Level |
|---|---|---|---|---|---|
| Gas Turbine 1 | Expander | 2 | 4<br>Gas Trb 1 Pwr | No | 500.0 * |
| Gas Turbine 2 | Expander | 46 | 48<br>Gas Trb 2 Pwr | No | 500.0 * |
| T1 | Tee | 5 | 9<br>10 | No | 500.0 * |
| T2 | Tee | 7 | 15<br>16 | No | 500.0 * |
| T3 | Tee | 19 | 22<br>23 | No | 500.0 * |
| T4 | Tee | 47 | 30<br>31 | No | 500.0 * |
| T5 | Tee | 51 | 37<br>38 | No | 500.0 * |
| T6 | Tee | Reactor Outlet | 11<br>42 | No | 500.0 * |
| Feed Water Heater 1 | Heat Exchanger | 18<br>9 | Water In<br>12 | No | 500.0 * |
| Feed Water Heater 2 | Heat Exchanger | 25<br>17 | 33<br>20 | No | 500.0 * |
| Feed Water Heater 3 | Heat Exchanger | 34<br>24 | 25<br>27 | No | 500.0 * |
| Feed Water Heater 5 | Heat Exchanger | 35<br>53 | 32<br>39 | No | 500.0 * |
| IHX 2 | Heat Exchanger | 4<br>42 | 46<br>45 | No | 500.0 * |
| IHX 1 | Heat Exchanger | 43<br>11 | 2<br>44 | No | 500.0 * |
| Condenser | Cooler | 14 | 6<br>Condenser Cooling | No | 500.0 * |
| Gas Cooler | Cooler | 54 | 55<br>Gas Cooler Q | No | 500.0 * |
| Intercooler | Cooler | 56 | 57<br>Intercooler Q | No | 500.0 * |
| Pump | Pump | 6<br>Pump Power | 35 | No | 500.0 * |
| Boiler Feed Pump | Pump | 33<br>BF Pmp Pwr | 18 | No | 500.0 * |
| Booster Pump | Pump | 26<br>Bstr Pmp Pwr | 34 | No | 500.0 * |
| Cycle Efficiency | Spreadsheet | | | No | 500.0 * |
| M6 | Mixer | 40<br>41 | 14 | No | 500.0 * |
| M2 | Mixer | 13<br>16 | 17 | No | 500.0 * |
| M3 | Mixer | 21<br>22 | 24 | No | 500.0 * |
| Deaerating Heater | Mixer | 28<br>32<br>50 | 26 | No | 500.0 * |
| M4 | Mixer | 30<br>49 | 50 | No | 500.0 * |
| M5 | Mixer | 37<br>52 | 53 | No | 500.0 * |

| | |
|---|---|
| INL<br>Calgary, Alberta<br>CANADA | Case Name: C:\Documents and Settings\mgq\Desktop\NGNP\FY 09 Report\Brayton<br>Unit Set: NGNP1<br>Date/Time: Wed Sep 30 15:37:13 2009 |

## Workbook: Case (Main) (continued)

### Unit Ops (continued)

| Operation Name | Operation Type | Feeds | Products | Ignored | Calc. Level |
|---|---|---|---|---|---|
| M1 | Mixer | 44<br>45 | 3 | No | 500.0 * |
| VLV1 | Valve | 12 | 13 | No | 500.0 * |
| VLV2 | Valve | 20 | 21 | No | 500.0 * |
| VLV3 | Valve | 27 | 28 | No | 500.0 * |
| VLV4 | Valve | 39 | 40 | No | 500.0 * |
| Water Knockout Tank 1 | Separator | 29 | 49<br>47 | No | 500.0 * |
| Water Knockout Tank 2 | Separator | 36 | 52<br>51 | No | 500.0 * |

## Spreadsheet: Cycle Efficiency

Units Set: NGNP

### CONNECTIONS

#### Imported Variables

| Cell | Object | Variable Description | Value |
|---|---|---|---|
| B2 | Energy Stream: Reactor Heat | Heat Flow | 6.000e+005 kW |
| B3 | Energy Stream: Recirc Pwr | Power | 1.344e+004 kW |
| D2 | Heat Exchanger: IHX 1 | Exchanger Cold Duty | 8.084e+004 kW |
| D3 | Heat Exchanger: IHX 2 | Exchanger Cold Duty | 5.942e+004 kW |
| D4 | Energy Stream: Gas Trb 1 Pwr | Power | 5.987e+004 kW |
| D5 | Energy Stream: Gas Trb 2 Pwr | Power | 6.982e+004 kW |
| D6 | Energy Stream: Gas Cmp 1 Pwr | Power | 3.316e+004 kW |
| D7 | Energy Stream: Gas Cmp 2 Pwr | Power | 2.887e+004 kW |
| F3 | Energy Stream: HP Trb 1 Pwr | Power | 6.616e+004 kW |
| F4 | Energy Stream: HP Trb 2 Pwr | Power | 3.217e+004 kW |
| F5 | Energy Stream: MP Trb 1 Pwr | Power | 4.604e+004 kW |
| F6 | Energy Stream: MP Trb 2 Pwr | Power | 4.424e+004 kW |
| F7 | Energy Stream: LP Trb 1 Pwr | Power | 1.341e+004 kW |
| F8 | Energy Stream: LP Trb 2 Pwr | Power | 2.563e+004 kW |
| F9 | Energy Stream: Pump Power | Power | 12.96 kW |
| F10 | Energy Stream: Bstr Pmp Pwr | Power | 3772 kW |
| F11 | Energy Stream: BF Pmp Pwr | Power | 2317 kW |
| F2 | LNG: Steam Generator | Exchanger Cold Duty | 4.732e+005 kW |
| A7 | Material Stream: 26 | Temperature | 93.622 C |

#### Exported Variables' Formula Results

| Cell | Object | Variable Description | Value |
|---|---|---|---|
| A8 | 59 | Temperature | 95.622 C |

### PARAMETERS

#### Exportable Variables

| Cell | Visible Name | Variable Description | Variable Type | Value |
|---|---|---|---|---|
| A8 | A8: Temperature | Temperature | Temperature | 95.622 C |
| B4 | B4: Hybrid Cycle Efficiency | Hybrid Cycle Efficiency | Percent | 45.72 |
| B5 | B5: | | Power | 2.758e+005 kW |
| B6 | B6: | | --- | 1459 |
| B10 | B10: | | Power | 3.574e+005 kW |
| B11 | B11: | | Power | 6.203e+004 kW |
| B12 | B12: | | Power | 6101 kW |
| D8 | D8: Brayton Cycle Efficiency | Brayton Cycle Efficiency | Percent | 48.25 |

Hyprotech Ltd. HYSYS.Plant v2.2.2 (Build 3806) Page 8 of 9

Licensed to: INL

* Specified by user.

| | |
|---|---|
| INL<br>Calgary, Alberta<br>CANADA | Case Name: C:\Documents and Settings\mgq\Desktop\NGNP\FY 09 Report\Braytor<br>Unit Set: NGNP1<br>Date/Time: Wed Sep 30 15:37:13 2009 |

## Spreadsheet: Cycle Efficiency (continued)

Units Set: NGNP

### PARAMETERS

#### Exportable Variables

| Cell | Visible Name | Variable Description | Variable Type | Value |
|---|---|---|---|---|
| F12 | F12: | | --- | 46.82 |

#### User Variables

### FORMULAS

| Cell | Formula | Result |
|---|---|---|
| A8 | =A7+2.0 | 95.622 C |
| B4 | =(D4+D5-D6-D7+F3+F4+F5+F6+F7+F8-F9-F10-F11-B3-B6)/B2*100 | 45.72 |
| B5 | =D4+D5-D6-D7+F3+F4+F5+F6+F7+F8-F9-F10-F11-B3 | 2.758e+005 kW |
| B10 | =D4+D5+F3+F4+F5+F6+F7+F8 | 3.574e+005 kW |
| B11 | =D6+D7 | 6.203e+004 kW |
| B12 | =F9+F10+F11 | 6101 kW |
| D8 | =(D4+D5-D6-D7)/(D2+D3)*100 | 48.25 |
| F12 | =(F3+F4+F5+F6+F7+F8-F9-F10-F11)/F2*100 | 46.82 |

### Spreadsheet

| | A | B | C | D | E | F |
|---|---|---|---|---|---|---|
| 1 | Primary Cycle * | | Brayton Cycle * | | Rankine Cycle * | |
| 2 | Reactor Heat * | 6.000e+005 kW * | IHX 1 Duty * | 8.084e+004 kW | Steam Generator Duty * | 4.732e+005 kW |
| 3 | Recirc Power * | 1.344e+004 kW | IHX 2 Duty * | 5.942e+004 kW | Turbine 1 * | 6.616e+004 kW |
| 4 | Hybrid Cycle Efficiency * | 45.72 | Gas Trb 1 Pwr * | 5.987e+004 kW | Turbine 2 * | 3.217e+004 kW |
| 5 | Total Electric Power * | 2.758e+005 kW | Gas Trb 2 Pwr * | 6.982e+004 kW | Turbine 3 * | 4.604e+004 kW |
| 6 | CT Power * | 1459 * | Gas Cmp 1 Pwr * | 3.316e+004 kW | Turbine 4 * | 4.424e+004 kW |
| 7 | 93.622 C | | Gas Cmp 2 Pwr * | 2.887e+004 kW | Turbine 5 * | 1.341e+004 kW |
| 8 | 95.622 C | | rayton Cycle Efficiency * | 48.25 | Turbine 6 * | 2.563e+004 kW |
| 9 | | | | | Pump 1 * | 12.96 kW |
| 10 | Turbine Power * | 3.574e+005 kW | | | Pump 2 * | 3772 kW |
| 11 | Compressor * | 6.203e+004 kW | | | Pump 3 * | 2317 kW |
| 12 | Pumps * | 6101 kW | | | ankine Cycle Efficiency * | 46.82 |
| 13 | | | | | | |
| 14 | | | | | | |
| 15 | | | | | | |

Hyprotech Ltd. HYSYS.Plant v2.2.2 (Build 3806) Page 9 of 9

Licensed to: INL

* Specified by user.

# Appendix B
# 600-MWt NGCC Combustion

The model of the NGCC combustion and results in Appendix B were developed using HYSYS.Plant Version 2.2.2 (Build 3806) from Hyprotech Ltd. on a desktop computer running Microsoft Windows XP Professional Version 2002 Service Pack 3.

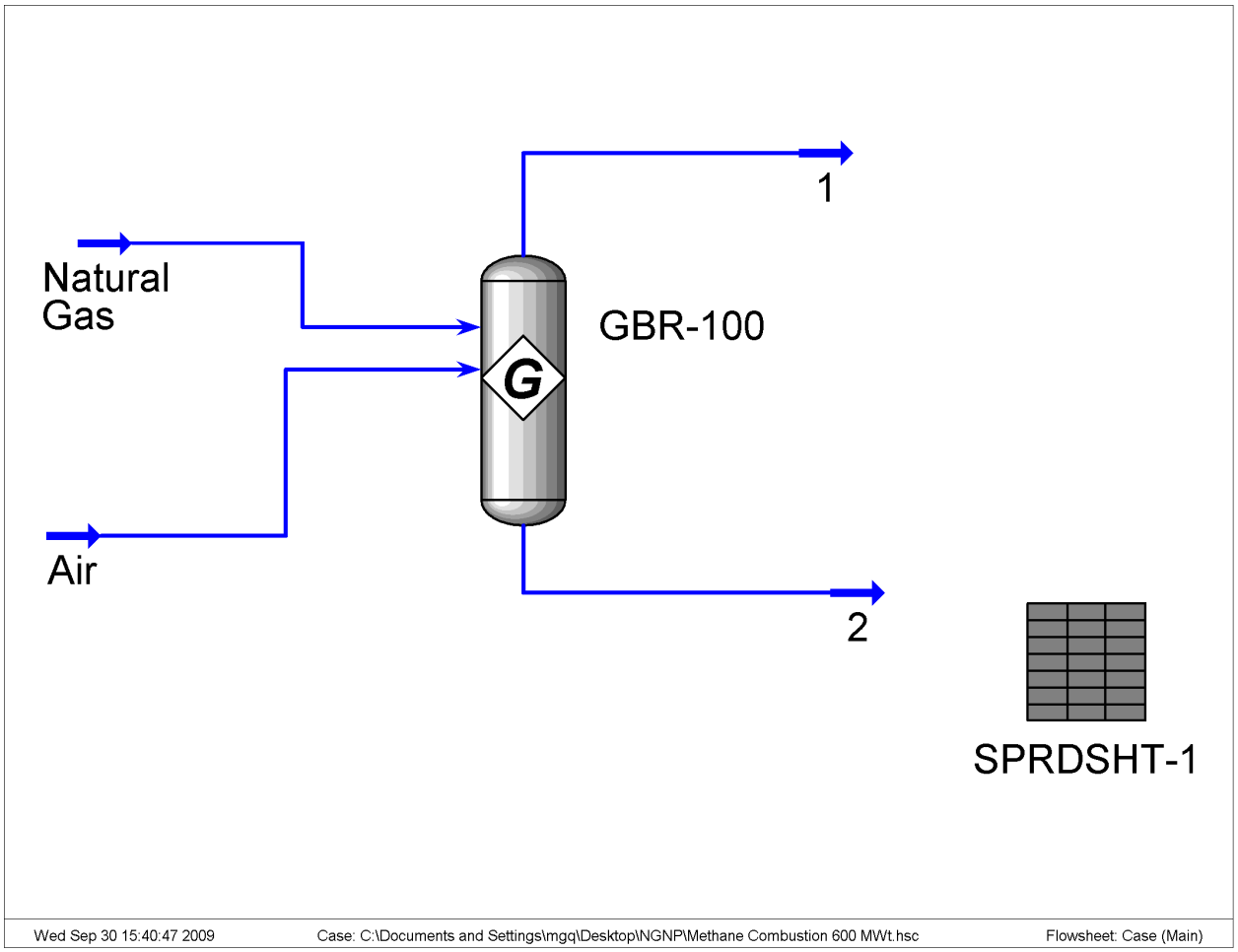

HYPROTECH

INL
Calgary, Alberta
CANADA

| | |
|---|---|
| Case Name: | C:\Documents and Settings\mgq\Desktop\NGNP\Methane Combustion |
| Unit Set: | NGNP1 |
| Date/Time: | Wed Sep 30 15:44:34 2009 |

# Workbook: Case (Main)

## Streams

| Name | | Natural Gas | Air | 1 | 2 | |
|---|---|---|---|---|---|---|
| Vapour Fraction | | 1.0000 | 1.0000 | 1.0000 | 0.0000 | |
| Temperature | (C) | 21.111 * | 21.111 * | 1015.3 | 1015.3 | |
| Pressure | (MPa) | 0.10133 * | 0.10133 * | 0.10133 | 0.10133 | |
| Molar Flow | (kgmole/h) | 2044.1 | 47417 | 48677 | 0.00000 | |
| Mass Flow | (kg/s) | 9.1094 | 380.00 * | 389.11 | 0.00000 | |
| Liquid Volume Flow | (m3/h) | 109.5 | 1581 | 1643 | 0.0000 | |
| Heat Flow | (kW) | -4.262e+004 | -1604 | -4.422e+004 | 0.0000 | |
| Molar Enthalpy | (kJ/kgmole) | -7.506e+004 | -121.8 | -3271 | -3271 | |

## Composition

| Name | Natural Gas | Air | 1 | 2 | |
|---|---|---|---|---|---|
| Comp Mole Frac (Methane) | 1.00000 * | 0.00000 * | 0.00000 | 0.00000 | |
| Comp Mole Frac (Nitrogen) | 0.00000 * | 0.79000 * | 0.76136 | 0.76136 | |
| Comp Mole Frac (Oxygen) | 0.00000 * | 0.21000 * | 0.10433 | 0.10433 | |
| Comp Mole Frac (CO) | 0.00000 * | 0.00000 * | 0.00000 | 0.00000 | |
| Comp Mole Frac (NO2) | 0.00000 * | 0.00000 * | 0.00000 | 0.00000 | |
| Comp Mole Frac (Helium) | 0.00000 * | 0.00000 * | 0.00000 | 0.00000 | |
| Comp Mole Frac (NO) | 0.00000 * | 0.00000 * | 0.00028 | 0.00028 | |
| Comp Mole Frac (N2O4) | 0.00000 * | 0.00000 * | 0.00805 | 0.00805 | |
| Comp Mole Frac (N2O) | 0.00000 * | 0.00000 * | 0.00000 | 0.00000 | |
| Comp Mole Frac (CO2) | 0.00000 * | 0.00000 * | 0.04199 | 0.04199 | |
| Comp Mole Frac (H2O) | 0.00000 * | 0.00000 * | 0.08399 | 0.08399 | |

## Gibbs Reactors

| Name | | GBR-100 | | | | |
|---|---|---|---|---|---|---|
| Separator Type | | 0 * | | | | |
| Vessel Temperature | (C) | 1015.3 | | | | |
| Vessel Pressure | (MPa) | 0.10133 | | | | |
| Vapour Molar Flow | (kgmole/h) | 4.868e+004 | | | | |
| Liquid Molar Flow | (kgmole/h) | 0.0000 | | | | |

## Unit Ops

| Operation Name | Operation Type | Feeds | Products | Ignored | Calc. Level |
|---|---|---|---|---|---|
| GBR-100 | Gibbs Reactor | Natural Gas | 2 | No | 500.0 * |
| | | Air | 1 | | |
| SPRDSHT-1 | Spreadsheet | | | No | 500.0 * |

# Spreadsheet: SPRDSHT-1

Units Set: NGNP

## CONNECTIONS

### Imported Variables

| Cell | Object | Variable Description | Value |
|---|---|---|---|
| B1 | Material Stream: Natural Gas | Mass Higher Heating Value | 5.515e+004 kJ/kg |

### Exported Variables' Formula Results

| Cell | Object | Variable Description | Value |
|---|---|---|---|
| B3 | Natural Gas | Mass Flow | 9.1094 kg/s |

HYPROTECH

INL
Calgary, Alberta
CANADA

| | |
|---|---|
| Case Name: | C:\Documents and Settings\mgq\Desktop\NGNP\Methane Combustion |
| Unit Set: | NGNP1 |
| Date/Time: | Wed Sep 30 15:44:34 2009 |

## Spreadsheet: SPRDSHT-1 (continued)

Units Set: NGNP

### PARAMETERS

#### Exportable Variables

| Cell | Visible Name | Variable Description | Variable Type | Value |
|---|---|---|---|---|
| B2 | B2: | | Energy | 5.024e+005 kW |
| B3 | B3: Mass Flow | Mass Flow | Mass Flow | 9.1094 kg/s |
| B4 | B4: | | --- | 0.5340 |
| B5 | B5: | | Energy | 2.683e+005 kW |

#### User Variables

### FORMULAS

| Cell | Formula | Result |
|---|---|---|
| B2 | =B5/B4 | 5.024e+005 kW |
| B3 | =B2/B1 | 9.1094 kg/s |

### Spreadsheet

| | A | B | C | D | | |
|---|---|---|---|---|---|---|
| 1 | Natural Gas HHV * | 5.515e+004 kJ/kg | | | | |
| 2 | Thermal Power * | 5.024e+005 kW | | | | |
| 3 | Mass Flow * | 9.1094 kg/s | | | | |
| 4 | Efficiency * | 0.5340 * | | | | |
| 5 | Electric Power * | 2.683e+005 kW * | | | | |
| 6 | | | | | | |
| 7 | | | | | | |
| 8 | | | | | | |
| 9 | | | | | | |
| 10 | | | | | | |

# Appendix C
# 55%-to-45% Debt-to-Equity Ratio Results

Table C-1. IRR results for the cost of electricity from a HTGR.

| | TCI -30% HTGR | | TCI | | TCI +50% HTGR | |
|---|---|---|---|---|---|---|
| | IRR | ($/kW-day) | IRR | ($/kW-day) | IRR | ($/kW-day) |
| Rankine Cycle | *$910,074,207* | | *$1,217,574,207* | | *$1,730,074,207* | |
| | 8.51 | $1.50 | 6.02 | $1.50 | 3.40 | $1.50 |
| | 13.02 | $2.13 | 9.94 | $2.13 | 6.79 | $2.13 |
| | 16.77 | $2.75 | 13.15 | $2.75 | 9.50 | $2.75 |
| | 12.00 | $1.97 | 12.00 | $2.51 | 12.00 | $3.42 |
| Combined Rankine/Brayton Cycle | *$925,526,060* | | *$1,233,026,060* | | *$1,745,526,060* | |
| | 10.01 | $1.50 | 7.36 | $1.50 | 4.59 | $1.50 |
| | 14.72 | $2.13 | 11.43 | $2.13 | 8.08 | $2.13 |
| | 18.66 | $2.75 | 14.81 | $2.75 | 10.92 | $2.75 |
| | 12.00 | $1.75 | 12.00 | $2.22 | 12.00 | $3.02 |

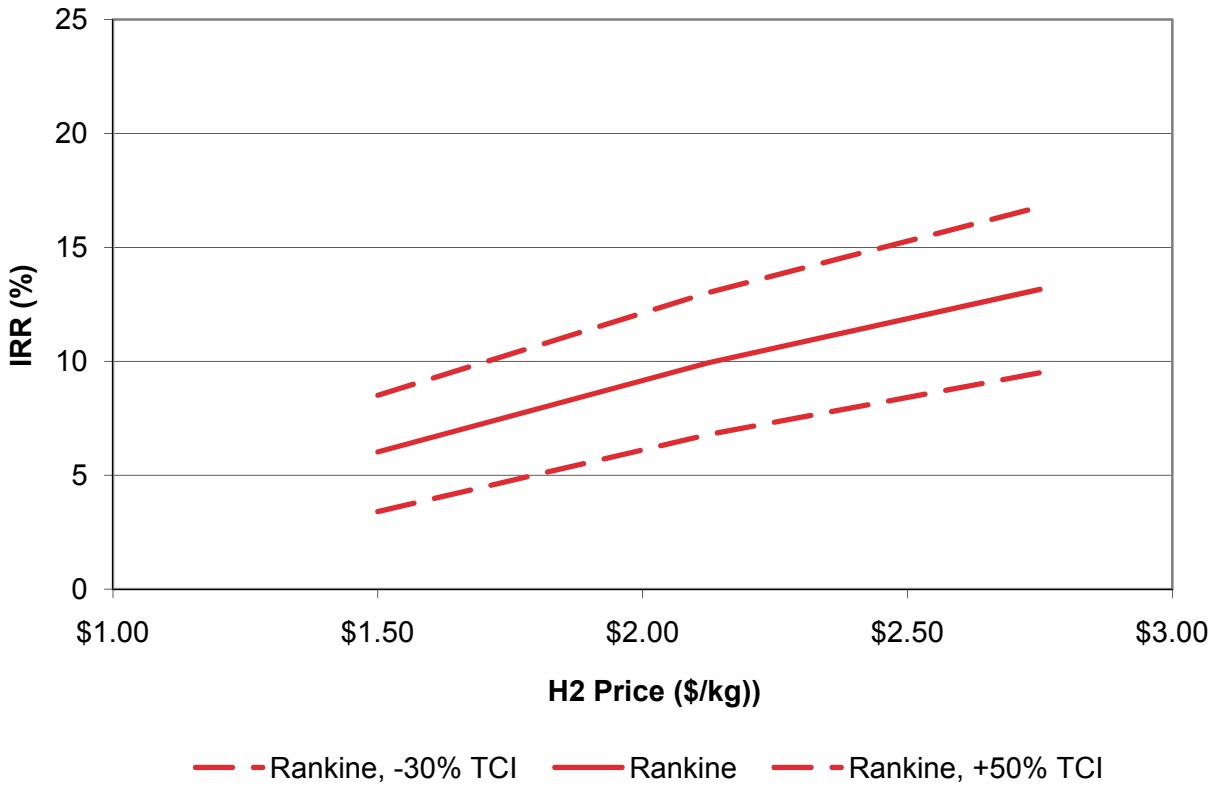


Figure C-1. Rankine IRR economic results.

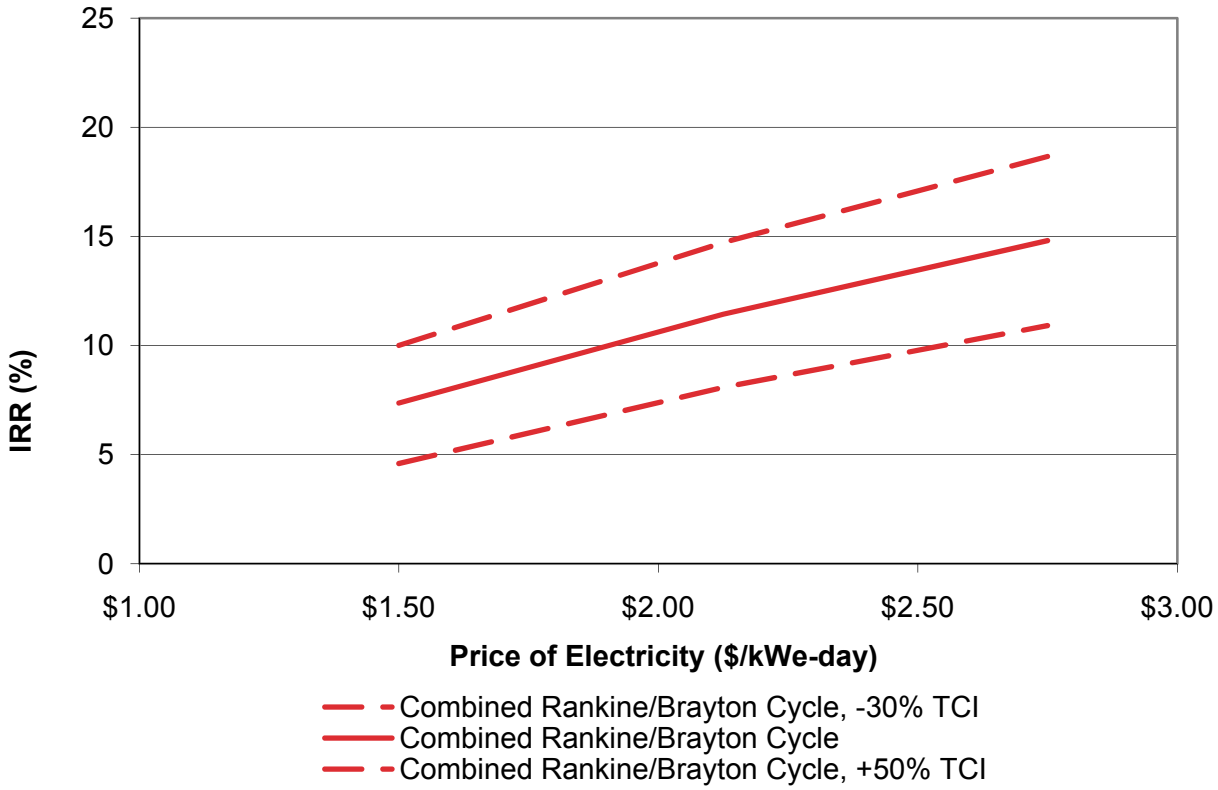


Figure C-2. Combined Rankine/Brayton cycle IRR economic results.

# Appendix D
# Cost Estimate Support Data Recapitulation

Appendix D is a cost estimate of the nuclear assisted production of ammonia using high temperature steam electrolysis without an air separation unit. The cost estimate was performed by a team of cost estimators at the INL. The capital cost of electric production can be found by summing the HTGR, and Rankine power cycle costs for the production of 879 MWe of electricity.

NGNP HTSE Ammonia w/o ASU Summary

Project Name: NGNP Process Integration
Process: HTSE Ammonia w/o ASU
Estimate Number: MA36-O

Client: M. Patterson
Prepared By: B. Wallace, R. Honsinger, J. Martin
Estimate Type: Class 5

| Process Component | Subtotal From Detail Sheets | Engineering % | Engineering | Contingency % | Contingency | Total Cost |
|---|---|---|---|---|---|---|
| High Temperature Gas Reactor (HTGR) | $ 4,201,101,415 | 0% | $ - | 0% | $ - | $ 4,201,101,415 |
| Rankine Power Cycle | $ 615,345,051 | 10% | $ 61,534,505 | 18% | $ 121,838,320 | $ 798,717,876 |
| High Temperature Steam Electrolysis (HTSE) | $ 363,429,475 | 10% | $ 36,342,947 | 18% | $ 71,959,036 | $ 471,731,458 |
| N2 Generation | $ 17,287,060 | 10% | $ 1,728,706 | 18% | $ 3,422,838 | $ 22,438,603 |
| CO2 Generation | $ 15,022,364 | 10% | $ 1,502,236 | 18% | $ 2,974,428 | $ 19,499,029 |
| Methanation | $ 9,518,338 | 10% | $ 951,834 | 18% | $ 1,884,631 | $ 12,354,803 |
| Ammonia Synthesis | $ 297,160,814 | 10% | $ 29,716,081 | 18% | $ 58,837,841 | $ 385,714,736 |
| Urea Synthesis | $ 288,347,019 | 10% | $ 28,834,702 | 18% | $ 57,092,710 | $ 374,274,430 |
| Nitric Acid Synthesis | $ 272,169,749 | 10% | $ 27,216,975 | 18% | $ 53,889,610 | $ 353,276,334 |
| Ammonium Nitrate Synthesis | $ 173,948,476 | 10% | $ 17,394,848 | 18% | $ 34,441,798 | $ 225,785,122 |
| Steam Turbines | $ 49,012,114 | 10% | $ 4,901,211 | 18% | $ 9,704,398 | $ 63,617,723 |
| Heat Recovery Steam Generator (HRSG) | $ - | 10% | $ - | 18% | $ - | $ - |
| Cooling Towers | $ 5,735,762 | 10% | $ 573,576 | 18% | $ 1,135,681 | $ 7,445,019 |
| **Total Cost - HTSE Ammonia w/o ASU** | | | | | | $ 6,935,956,549 |
| **Total Cost Rounded to the Nearest $10M** | | | | | | $ 6,940,000,000 |

| | Remarks |
|---|---|
| Checked By: SNW | |
| Approved By: | |

4/20/2010

Page 1 of 1

*Rev. 03-04-10*
Battelle Energy Alliance, LLC

## COST ESTIMATE SUPPORT DATA RECAPITULATION

Project Title: NGNP Process Integration – HTSE Ammonia without ASU
Estimator: B. W. Wallace/CEP, R. R. Honsinger/CEP, J. B. Martin/CCT
Date: April 20, 2010
Estimate Type: Class 5
File: MA36-O
Approved By:

Page 1 of 9

I. **PURPOSE:** *Brief description of the intent of how the estimate is to be used (i.e., for engineering study, comparative analysis, request for funding, proposal, etc.).*

It is expected that the capital costs identified in these estimates will be used in a model producing an economic analysis for each specific integrated application and subsequently will be considered in a related feasibility study.

II. **SCOPE OF WORK:** *Brief statement of the project's objective. Thorough overview and description of the proposed project. Identify work to be accomplished, as well as any specific work to be excluded.*

A. **Objective:**
Develop Class 5 estimates as defined by the Association for Advancement of Cost Engineering (AACEi) that will identify the current capital cost associated with high-temperature gas reactors (HTGRs) integrated with a nuclear ammonia without an air separation unit process.

B. **Included:**
The scope of work required to achieve this objective includes the following:

1. Engineering
2. The allowance provided for the HTGR represents a complete and operable system. All elements required for construction of this nuclear reactor capability, including an initial steam generator, security systems, contingency, and owner's costs are included in the turn-key allowance. Owner's costs are included only in the case of the reactor capability. It is considered that the total value represents all inside of battery limits (ISBL) elements, outside of battery limits (OSBL) elements, site development, and all ancillary control and operational functions and capabilities.
3. Construction of a new integrated refinery capability to produce ammonia that consists of the following:
   a. Overnight island-type costs for HTGRs
   b. High-temperature steam electrolysis (HTSE) hydrogen production unit
   c. $H_2$ combustor ($N_2$ generation)
   d. Natural gas combustor ($CO_2$ generation)
   e. Methanation
   f. Ammonia synthesis
   g. Urea synthesis
   h. Nitric acid synthesis

i. Ammonium nitrate synthesis
j. Steam turbines, internal to process
k. Heat recovery steam generator, internal to process
l. Cooling towers, internal to process
m. Allowances for Balance of Plant (BOP)/offsite/OSBL, including the following:
   (1.) Site development/improvements
   (2.) Provisions for general and administrative buildings and structures
   (3.) Provisions for OSBL piping
   (4.) Provisions for OSBL instrumentation and control
   (5.) Provisions for OSBL electrical
   (6.) Provisions for facility supply and OSBL water systems
   (7.) Provisions for site development/improvements
   (8.) Project/construction management.

C. **Excluded**:
This scope of work specifically excludes the following elements:
1. Licensing and permitting costs
2. Operational costs
3. Land costs
4. Sales taxes
5. Royalties
6. Owner's fees and owner's costs, except those included for the HTGR
7. The allowance provided for the HTGR capability excludes all costs associated with materials development, or costs that would not be appropriately associated with an nth of a kind (NOAK) reactor/facility.

III. **ESTIMATE METHODOLOGY**: *Overall methodology and rationale of how the estimate was developed (i.e., parametric, forced detail, bottoms up, etc.). Total dollars/hours and rough order magnitude (ROM) allocations of the methodologies used to develop the cost estimate.*

Consistent with the AACEi Class 5 estimates, the level of definition and engineering development available at the time they were prepared, their intended use in a feasibility study, and the time and resources available for their completion, the costs included in this estimate have been developed using parametric evaluations. These evaluations have used publicly available and published project costs to represent similar islands utilized in this project. Analysis and selection of the published costs used have been performed by the project technical lead and Cost Estimating. Suitability for use in this effort was determined considering the correctness and completeness of the data available, the manner in which total capital costs were represented, the age of the previously performed work, and the similarity to the capacity/trains required by this project. The specific sources, selected and used in this cost estimate, are identified in the capital cost estimate detail sheets. Adjustments have been made to these published costs using escalation factors identified in the Chemical Engineering Price Cost Index. Scaling of the published island costs has been

**COST ESTIMATE SUPPORT DATA RECAPITULATION**
– Continued –
Project Title: NGNP Process Integration – HTSE Ammonia without ASU
File: MA36-O Page 3 of 9

accomplished using the six-tenths capacity factoring method. Costs included for the HTGR, power cycles, and HTSE, have been identified and provided by the respective BEA subject matter experts. The total cost for each of these items has been linearly calculated from the respective base unit costs. Any normalization to provide for geographic factors was considered using geographic factors available from RS Means Construction Cost Data references. Cost-estimating relationships have been used to identify allowances to complete the costs.

It was identified to the Next Generation Nuclear Plant (NGNP) Process Integration team that the methodology employed by NGNP to develop the nuclear capability included constituents of parametric modeling, vendor quotes, actual costs, and proprietary costing databases. These preconceptual design estimates were reviewed by NGNP Project Engineering for credibility with regard to assumptions and bases of estimate and performed multiple studies to reconcile variations in the scope and assumptions within the three estimates.

BOP/OSBL costs were determined by the project team, considering data provided by Shell Gasifier IGCC Base Case report NETL 2000, *Conceptual Cost Estimating Manual* Second Edition by John S. Page, and additional adjusted sources. Because the allowances identified did not show significant variability, the allowances identified in the NETL 2000 report were chosen for this effort in order to minimize the mixing of data sources.

IV. **BASIS OF THE ESTIMATE**: *Overall explanation of sources for resource pricing and schedules.*

A. **Quantification Basis**: *The source for the measurable quantities in the estimate that can be used in support of earned value management. Source documents may include drawings, design reports, engineers' notes, and other documentation upon which the estimate is originated.*

All islands and capacities have been provided to Cost Estimating by the project respective expert.

B. **Planning Basis**: *The source for the execution and strategies of the work that can be used to support the project execution plan, acquisition strategy, schedules, and market conditions and other documentation upon which the estimate is originated.*

1. All islands and HTGRs represent NOAK projects.
2. Projects will be constructed and operated by commercial entities.
3. All projects, with the exception of the Steam-Assisted Gravity Drainage Project, will be located in the U.S. Gulf Coast refinery region.
4. Costs are presented as overnight costs.
5. The cost estimate does not consider or address funding or labor resource restrictions. Sufficient funding and labor resources will be available in a manner that allows optimum usage of the funding and resources as estimated and scheduled.

**COST ESTIMATE SUPPORT DATA RECAPITULATION**

– Continued –

Project Title: NGNP Process Integration – HTSE Ammonia without ASU

File: MA36-O Page 4 of 9

C. **Cost Basis**: *The source for the costing on the estimate that can be used in support of earned value management, funding profiles, and schedule of values. Sources may include published costing references, judgment, actual costs, preliminary quotes or other documentation upon which the estimate is originated.*

1. All costs are represented as current value costs. Factors for forward-looking escalation and inflation factors are not included in this estimate.
2. Where required, published cost factors, as identified in the Chemical Engineering Plant Cost Index, will be applied to previous years' values to determine current year values.
3. Geographic location factors, as identified in RS Means Construction Cost Data reference manual, were considered for each source cost.
4. The cost provided for the HTGR reflects internal BEA cost data that was developed for the HTGR and presented to the NGNP Process Integration team by L. Demmick. Considered in the cost is a pre-conceptual cost estimate prepared by three separate contractor teams. All contractor teams proposed 4-unit NOAK plants with thermal power levels between 2,000 $MW_t$ and 2,400 $MW_t$ at a cost of roughly $4B, including owner's cost. This equates to $1,667 to $2,000 per $kW_t$. For the purposes of this report, the nominal cost of an HTGR will be set at the upper end of this range, $2,000 per $kW_t$. This is a complete turnkey cost and includes engineering and construction of a NOAK HTGR, the power cycle, and contingency. The total HTGR cost for each process is calculated linearly as $1,708,333 per MWth of required capacity, excluding the cost of the power cycles.
5. The cost included for the power cycle was provided by the INL project team expert. The power cycle cost is based on the definition of a 240-MWe capacity and $618,176 per MWe. The total power cycle cost for each process is calculated linearly as $618,176 per MWe of required capacity. BOP, engineering, and contingency costs are added to the base cost.
6. The cost included for HTSE was provided by the INL project team expert. The total HTSE cost for each process is calculated linearly as $36,120,156 per kg/s of required capacity. BOP, engineering, and contingency costs are added to the base cost.
7. Apt, Jay, et al., *An Engineering-Economic Analysis of Syngas Storage*, NETL, July 2008.
8. AACEi, *Recommended Practices*, website, visited November 16, 2009, http://www.aacei.org/technical/rp.shtml.
9. Brown, L. C., et al., "Alternative Flowsheets for the Sulfur-Iodine Thermochemical Hydrogen Cycle," *General Atomics*, February 2003.
10. CEPCI, *Chemical Engineering Magazine*, "Chemical Engineering Plant Cost Index," November 2009: 64.
11. Choi, 1996, Choi, Gerald N., et al, *Design/Economics of a Once-Through Natural Gas Fischer-Tropsch Plant with Power Co-Production*, Bechtel, 1996.
12. Dooley, J., et al, *Carbon Dioxide Capture and Geologic Storage*, Battelle, April 2006.

**COST ESTIMATE SUPPORT DATA RECAPITULATION**

– Continued –

Project Title: NGNP Process Integration – HTSE Ammonia without ASU

File: MA36-O Page 5 of 9


13. Douglas, Fred R., et al., *Conduction Technical and Economic Evaluations – as Applied for the Process and Utility Industries*, AACEi, April 1991.
14. FLUOR/UOP, 2004, Mak, John Y., et al., *Synthesis Gas Purification in Gasification to Ammonia/Urea Complex*, FLUOR/UOP, 2004.
15. Friedland, Robert J., et al., *Hydrogen Production Through Electrolysis*, NREL, June 2002.
16. Gray, 2004, Gray, David, et al, *Polygeneration of SNG, Hydrogen, Power, and Carbon Dioxide from Texas Lignite*, MTR-04, 2004-18, NETL, December 2004.
17. Harvego, E. A., et al., *Economic Analysis of a Nuclear Reactor Powered High-Temperature Electrolysis Hydrogen Production Plant*, INL, August 2008.
18. Harvego, E. A., et al., *Economic Analysis of the Reference Design for a Nuclear-Driven High-Temperature-Electrolysis Hydrogen Production Plant*, INL, January 2008.
19. Ivy, Johanna, *Summary of Electrolytic Hydrogen Production*, NREL September 2004.
20. Ibsen, Kelly, et al., *Equipment Design and Cost Estimation for Small Modular Biomass Systems, Synthesis Gas Cleanup, and Oxygen Separation Equipment*, NREL, May 2006.
21. Klett, Michael G., et al., *The Cost of Mercury Removal in an IGCC Plant*, NETL, September 2002.
22. Kreutz, 2008, Kreutz, Thomas G., et al, "Fischer-Tropsch Fuels from Coal and Biomass," *25th Annual International Pittsburgh Coal Conference*, Pittsburgh, Princeton University, October 2008.
23. Loh, H. P., et al., *Process Equipment Cost Estimation*, DOE/NETL-2002/1169, NETL, 2002.
24. NETL, 2000, Shelton, W., et al., *Shell Gasifier IGCC Base Cases*, PED-IGCC-98-002, NETL, June 2000.
25. NETL, 2007a, Van Bibber, Lawrence, *Baseline Technical and Economic Assessment of a Commercial Scale Fischer-Tropsch Liquids Facility*, DOE/NETL-207/1260, NETL, April 2007.
26. NETL, 2007b, Woods, Mark C., et al., *Cost and Performance Baseline for Fossil Energy Plants*, NETL, August 2007.
27. NREL, 2005, Saur, Genevieve, *Wind-To-Hydrogen Project: Electrolyzer Capital Cost Study*, NREL, December 2008.
28. O'Brien, J. E., et al., *High-Temperature Electrolysis for Large-Scale Hydrogen and Syngas Production from Nuclear Energy – System Simulation and Economics*, INL, May 2009.
29. O'Brien, J. E., et al., *Parametric Study of Large-Scale Production of Syngas via High-Temperature Co-Electrolysis*, INL, January 2009.
30. Page, John S., *Conceptual Cost Estimating Manual – 2nd ed.*, Houston: Gulf Publishing Company, 1996.
31. Pietlock, Bernard A., et al., *Developing Location Factors by Factoring- as Applied in Architecture, Engineering, Procurement, and Construction*, AACEi, October 2006.

32. Ramsden, Todd, et al., *Current (2005) Hydrogen Production from Central Grid Electrolysis*, NREL, May 2008.
33. Ramsden, Todd, et al., *Longer-Term (2025) Hydrogen Production from Central Grid Electrolysis*, NREL, May 2008.
34. Richardson Construction Estimating Standards, *Process Plant Cooling Towers*, Cost Data Online, September 16, 2009, website, visited December 15, 2009, http://www.costdataonline.com/.
35. Sohal, M. S., et al., *Challenges in Generating Hydrogen by High Temperature Electrolysis Using Solid Oxide Cells*, INL, March 2008.
36. Steinberg, Meyer, *Conversion of Coal to Substitute Natural Gas (SNG)*, HCE, 2005.
37. Udengaard, 2008, Udengaard, Niels R., et al., *Convert Coal, petcoke into valuable SNG*, Haldor Topsoe, April 2008.
38. van der Ploeg, H. J., et al., *The Shell Coal Gasification Process for the US Industry*, Shell, October 2004.
39. WorleyParsons, 2002, Rameshni, Mahin, *Cost Effective Options to Expand SRU Capacity Using Oxygen*, WorleyParsons, May 2002.

V. **ESTIMATE QUALITY ASSURANCE**: *A listing of all estimate reviews that have taken place and the actions taken from those reviews.*

A review of the cost estimate was held on January 14, 2010, with the project team and the cost estimators. This review allowed for the project team to review and comment, in detail, on the perceived scope, basis of estimates, assumptions, project risks, and resources that make up this cost estimate. Comments from this review have been incorporated into this estimate to reflect a project team consensus of this document.

VI. **ASSUMPTIONS**: *Condition statements accepted or supposed true without proof of demonstration; statements adding clarification to scope. An assumption has a direct impact on total estimated cost.*

**General Assumptions:**

A. All costs are represented in 2009 values.
B. Costs that were included from sources representing years prior to 2009 have been normalized to 2009 values using the Chemical Engineering Plant Cost Index. This index was selected due to its widespread recognition and acceptance and its specific orientation toward work associated with chemical and refinery plants.
C. Capital costs are based on process islands. The majority of these islands are interchangeable, after factoring for the differing capacities, flowsheet-to-flowsheet.
D. All chemical processing and refinery processes will be located in the U.S. Gulf Coast region.
E. All costs considered to be BOP costs that can be specifically identified have been factored out of the reported source data and added into the estimate in a manner consistent with that identified in the NETL 2000 IGCC Base Cost report. Inclusion of the source costs in this manner normalizes all reported cost information to the bare-erected costs.

**COST ESTIMATE SUPPORT DATA RECAPITULATION**
– Continued –
Project Title: NGNP Process Integration – HTSE Ammonia without ASU
File: MA36-O Page 7 of 9

**HTGR:**

A. The linearly scalable cost included for an HTGR reflects an NOAK reactor with a 750°C-operating temperature.
B. HTGR is considered to be linearly scalable, by required capacity, per the direction of the project team. This allows the process integration feasibility studies to showcase the financial analysis of the process without the added burden of integer quantity 600-MWth HTGRs.
C. The allowance represents a turnkey condition for the reactor and its supporting infrastructure.
D. A high-temperature, high-pressure steam generator is included in the cost represented for HTGR.
E. A contingency allowance is included in the HTGR cost, but is not identified as a separate line item in this estimate. This allowance was identified and included by the NGNP HTGR project team.
F. Total cost range, including contingency, for HTGR is -50%, +100%.
G. Cost included for the power cycle reflects NOAK research and manufacturing developments to allow for assumed high pressures and temperatures.
H. The power cycle is considered to be linearly scalable, by required capacity, per the direction of the project team. This allows the process integration feasibility studies to showcase the financial analysis of the process.
I. The cost included for HTSE reflects NOAK research and manufacturing developments, which will increase the expected lifespan of the electrolysis cells.
J. The HTSE is considered to be linearly scalable, by required capacity, per the direction of the project team. This allows the process integration feasibility studies to showcase the financial analysis of the process.

**HTSE Ammonia without Air Separation Unit**

Some estimated island costs are based on figures from a verbal conversation with Casale, a leading world vendor of process industry services. These costs were used in cases where other acceptable costs were not available.

## VII. CONTINGENCY GUIDELINE IMPLEMENTATION:

**Contingency Methodologies:** *Explanation of methodology used in determining overall contingency. Identify any specific drivers or items of concern.*

At a project risk review on December 9, 2009, the project team discussed risks to the project. An 18% allowance for capital construction contingency has been included at an island level based on the discussion and is included in the summary sheet. The contingency level that was included in the island cost source documents and additional threats and opportunities identified here were considered during this review. The contingency identified was considered by the project team and included in Cost and Performance Baseline for Fossil Energy Plants DOE/NETL-2007/1281 and similar reports. Typically, contingency allowance provided in these reports ranged from 15% to 20%. Since much of

**COST ESTIMATE SUPPORT DATA RECAPITULATION**

– Continued –

Project Title: NGNP Process Integration – HTSE Ammonia without ASU

File: MA36-O Page 8 of 9

the data contained in this estimate has been derived from these reports, the project team has also chosen a level of contingency consistent with them.

While the level of contingency provided for the HTGR capability is not identified as a line item, the cost data provided to the NGNP Process Integration team was identified as including an appropriate allocation for contingency. No additional contingency has been added to this element.

A. **Threats**: *Uncertain events that are potentially negative or reduce the probability that the desired outcome will happen.*

1. The singularly largest threat to this estimate surrounds the lump sum cost included for the HTGR reactor(s). This is followed by the HTSE process, where applicable. While the overriding assumption is that these elements will be NOAK, currently, a complete HTGR has not been commissioned and the HTSE has been successfully developed in an integrated laboratory-scale model, but has not been completed in either pilot plant or production scales.
2. The level of project definition/development that was available at the time the estimate was prepared represents a substantial risk to the project and is likely to occur. The high level at which elements were considered and included has the potential to include additional elements that are within the work scope but not sufficiently provided for or addressed at this level.
3. The estimate methodology employed is one of a stochastic parametrically evaluated process. This process used publicly available published costs that were related to the process required, costs were normalized using price indices, and the cost was scaled to provide the required capacity. The cost-estimating relationships that were used represent typical costs for BOP allowances, but source cost data from which the initial island costs were derived were not completely descriptive of the elements included, not included, or simply referred to with different nomenclature or combined with other elements. While every effort has been made to correctly normalize and factor the costs for use in this effort, the risk exists that not all of these were correctly captured due to the varied information available.
4. This project is heavily dependent on metals, concrete, petroleum, and petroleum products. Competition for these commodities in today's environment due to global expansion, uncertainty, and product shortages affects the basic concepts of the supply and demand theories, thus increasing costs.
5. Impacts due to large quantities of materials, special alloy materials, fabrication capability, and labor availability could all represent conditions that may increase the total cost of the project.

**COST ESTIMATE SUPPORT DATA RECAPITULATION**

– Continued –

Project Title: NGNP Process Integration – HTSE Ammonia without ASU

File: MA36-O Page 9 of 9

B. **Opportunities**: *Uncertain events that could improve the results or improve the probability that the desired outcome will happen.*

1. Additional research and work performed with both vendors and potential owner/operators for a specific process or refinery may identify efficiencies and production means that have not been available for use in this analysis.
2. Recent historical data may identify and include technological advancements and efficiencies not included or reflected in the publicly available source data used in this effort.

**Note:** Contingency does not increase the overall accuracy of the estimate; it does, however, reduce the level of risk associated with the estimate. Contingency is intended to cover the inadequacies in the complete project scope definition, estimating methods, and estimating data. Contingency specifically excludes changes in project scope, unexpected work stoppages (e.g., strikes, disasters, and earthquakes) and excessive or unexpected inflation or currency fluctuations.

VIII. **OTHER COMMENTS/CONCERNS SPECIFIC TO THE ESTIMATE**:

None.

**Detail Item Report - High Temperature Gas Reactor (HTGR)**

| | | | |
|---|---|---|---|
| **Project Name:** | NGNP Process Integration | **Client:** | M. Patterson |
| **Process:** | HTSE Ammonia w/o ASU | **Prepared By:** | B. Wallace, R. Honsinger, J. Martin |
| **Estimate Number:** | MA36-O | **Estimate Type:** | Class 5 |

**Sources Considered:**

| Source | Reported Capacity | | Reported Trains | Report Cost Year | Reported Cost | Reporting Year Cost Per Train | Normalized Cost Per Train using CEPCI Index | Capacity Required | | Trains Reqd. | Capacity per Train | | Factored Cost per Train from Normalized Cost | Total Current Cost for Required Trains |
|---|---|---|---|---|---|---|---|---|---|---|---|---|---|---|
| INL Internal Cost Data (INL 2009) | 1 | MWth | | 2009 | $ 1,708,333 | $ 1,708,333 | $ 1,708,333 | 2,459 | MWth | | | | $ 4,201,101,415 | $ 4,201,101,415 |

**Source Selected:**

| Source | Reported Capacity | | Reported Trains | Report Cost Year | Reported Cost | Reporting Year Cost Per Train | Normalized Cost Per Train using CEPCI Index | Capacity Required | | Trains Reqd. | Capacity per Train | | Factored Cost per Train from Normalized Cost | Total Current Cost for Required Trains |
|---|---|---|---|---|---|---|---|---|---|---|---|---|---|---|
| INL Internal Cost Data (INL 2009) | 1 | MWth | | 2009 | $ 1,708,333 | $ 1,708,333 | $ 1,708,333 | 2,459 | MWth | | | | $ 4,201,101,415 | $ 4,201,101,415 |

**Balance of Plant:**

| Description | % of Total Cost | | | | | | Cost Per Train | Total Cost |
|---|---|---|---|---|---|---|---|---|
| Water Systems | 0.00% | | | | | | $ - | $ - |
| Civil/Structural/Buildings | 0.00% | | | | | | $ - | $ - |
| Piping | 0.00% | | | | | | $ - | $ - |
| Control and Instrumentation | 0.00% | | | | | | $ - | $ - |
| Electrical Systems | 0.00% | | | | | | $ - | $ - |
| | | | | | | Total Balance of Plant | $ - | $ - |
| | | | | | | Total Balance of Plant Plus the Selected Source | $ 4,201,101,415 | $ 4,201,101,415 |

**Basis of Estimate Notes:**

Single source cost point. This cost has been provided by the subcontracted subject matter expert L. Demick to the INL NGNP Process Integration team. This cost represents a complete turnkey cost. The cost of an HTGR reactor, as provided by L. Demick, is $2,000,000 per MWth required. This cost used has been reduced to $1,708,333 per MWth to exclude the cost of power cycles.

**Detail Item Report - Rankine Cycle - Case 11, Supercritical PC Case**

| | | | |
|---|---|---|---|
| **Project Name:** | NGNP Process Integration | **Client:** | M. Patterson |
| **Process:** | HTSE Ammonia w/o ASU | **Prepared By:** | B. Wallace, R. Honsinger, J. Martin |
| **Estimate Number:** | MA36-O | **Estimate Type:** | Class 5 |

**Sources Considered:**

| Source | Reported Capacity | | Reported Trains | Report Cost Year | Reported Cost | Reporting Year Cost Per Train | Normalized Cost Per Train using CEPCI Index | Capacity Required | | Trains Reqd. | Capacity per Train | | Factored Cost per Train from Normalized Cost | Total Current Cost for Required Trains |
|---|---|---|---|---|---|---|---|---|---|---|---|---|---|---|
| INL Internal Cost Data (INL 2009) | 240 | MWe | 1 | 2009 | $ 148,362,255 | $ 148,362,255 | $ 148,362,255 | 879 | MWe | 5 | 176 | MWe | $ 123,069,010 | $ 615,345,051 |

**Summary:**

| Source | Reported Capacity | | Reported Trains | Report Cost Year | Reported Cost | Reporting Year Cost Per Train | Normalized Cost Per Train using CEPCI Index | Capacity Required | | Trains Reqd. | Capacity per Train | | Factored Cost per Train from Normalized Cost | Total Current Cost for Required Trains |
|---|---|---|---|---|---|---|---|---|---|---|---|---|---|---|
| INL Internal Cost Data (INL 2009) | 240 | MWe | 1 | 2009 | $ 148,362,255 | $ 148,362,255 | $ 148,362,255 | 879 | MWe | 5 | 176 | MWe | $ 123,069,010 | $ 615,345,051 |

**Balance of Plant:**

| Description | % of Total Cost | | | | | | Cost Per Train | Total Cost |
|---|---|---|---|---|---|---|---|---|
| Water Systems | 0.00% | | | | | | $ - | $ - |
| Civil/Structural/Buildings | 0.00% | | | | | | $ - | $ - |
| Piping | 0.00% | | | | | | $ - | $ - |
| Control and Instrumentation | 0.00% | | | | | | $ - | $ - |
| Electrical Systems | 0.00% | | | | | | $ - | $ - |
| | | | | | | Total Balance of Plant | $ - | $ - |
| | | | | | | Total Balance of Plant Plus the Selected Source | $ 123,069,010 | $ 615,345,051 |

**Basis of Estimate Notes:**

Single source cost. The reported costs are from the INL project team expert. The reported cost represents a Rankine power cycle, excluding the steam generator. The cost is based on information found in NETL 2007b, which has been adjusted and customized for this project by the INL project team expert. The allowances listed under 'Balance of Plant' are based on NETL 2000. These allowance values are comparable to additional published estimating guides, such as Page 1996. The allowances have been adjusted and customized for this project based on estimator judgment. The reduced civil/structural/buildings allowance accounts for the buildings that are included in the Rankine power cycle cost. Water and electrical systems BOP allowances are included in the reported cost for the Rankine power cycle.

Detail Item Report - High Temperature Steam Electrolysis (HTSE)

| | | | |
|---|---|---|---|
| Project Name: | NGNP Process Integration | Client: | M. Patterson |
| Process: | HTSE Ammonia w/o ASU | Prepared By: | B. Wallace, R. Honsinger, J. Martin |
| Estimate Number: | MA36-O | Estimate Type: | Class 5 |

**Sources Considered:**

| Source | Reported Capacity | | Reported Trains | Report Cost Year | Reported Cost | Reporting Year Cost Per Train | Normalized Cost Per Train using CEPCI Index | Capacity Required | | Trains Reqd. | Capacity per Train | | Factored Cost per Train from Normalized Cost | Total Current Cost for Required Trains |
|---|---|---|---|---|---|---|---|---|---|---|---|---|---|---|
| INL Feasibility Study (INL 2009) | 1.00 | kg/s | 1 | 2009 | $ 36,120,156 | $ 36,120,156 | $ 36,120,156 | 7.51 | kg/s | | | | $ 271,216,026 | $ 271,216,026 |

**Source Selected:**

| Source | Reported Capacity | | Reported Trains | Report Cost Year | Reported Cost | Reporting Year Cost Per Train | Normalized Cost Per Train using CEPCI Index | Capacity Required | | Trains Reqd. | Capacity per Train | | Factored Cost per Train from Normalized Cost | Total Current Cost for Required Trains |
|---|---|---|---|---|---|---|---|---|---|---|---|---|---|---|
| INL Feasibility Study (INL 2009) | 1.00 | kg/s | 1 | 2009 | $ 36,120,156 | $ 36,120,156 | $ 36,120,156 | 7.51 | kg/s | | | | $ 271,216,026 | $ 271,216,026 |

**Balance of Plant:**

| Description | % of Total Cost | | | | | | | Cost Per Train | Total Cost |
|---|---|---|---|---|---|---|---|---|---|
| Water Systems | 7.10% | | | | | | | $ 19,256,338 | $ 19,256,338 |
| Civil/Structural/Buildings | 9.20% | | | | | | | $ 24,951,874 | $ 24,951,874 |
| Piping | 7.10% | | | | | | | $ 19,256,338 | $ 19,256,338 |
| Control and Instrumentation | 2.60% | | | | | | | $ 7,051,617 | $ 7,051,617 |
| Electrical Systems | 8.00% | | | | | | | $ 21,697,282 | $ 21,697,282 |
| | | | | | | | Total Balance of Plant | $ 92,213,449 | $ 92,213,449 |
| | | | | | | | Total Balance of Plant Plus the Selected Source | $ 363,429,475 | $ 363,429,475 |

**Rationale for Selection:**

Single source cost. The reported costs are from the INL project team expert. The allowances listed under 'Balance of Plant' are based on NETL 2000. These allowance values are comparable to additional published estimating guides, such as Page 1996.

Detail Item Report - N2 Generation

| | | | |
|---|---|---|---|
| Project Name: | NGNP Process Integration | Client: | M. Patterson |
| Process: | HTSE Ammonia w/o ASU | Prepared By: | B. Wallace, R. Honsinger, J. Martin |
| Estimate Number: | MA36-O | Estimate Type: | Class 5 |

Sources Considered:

| Source | Reported Capacity | | Reported Trains | Report Cost Year | Reported Cost | Reporting Year Cost Per Train | Normalized Cost Per Train using CEPCI Index | Capacity Required | | Trains Reqd. | Capacity per Train | | Factored Cost per Train from Normalized Cost | Total Current Cost for Required Trains |
|---|---|---|---|---|---|---|---|---|---|---|---|---|---|---|
| N2 Generator Cost (Wood 2009) | 239,265 | lb/hr | 1 | 2007 | $13,317,500 | $ 13,317,500 | $ 12,977,845 | 236,902 | lb/hr | 1 | 236,902 | lb/hr | $ 12,900,791 | $ 12,900,791 |

Source Selected:

| Source | Reported Capacity | | Reported Trains | Report Cost Year | Reported Cost | Reporting Year Cost Per Train | Normalized Cost Per Train using CEPCI Index | Capacity Required | | Trains Reqd. | Capacity per Train | | Factored Cost per Train from Normalized Cost | Total Current Cost for Required Trains |
|---|---|---|---|---|---|---|---|---|---|---|---|---|---|---|
| N2 Generator Cost (Wood 2009) | 239,265 | lb/hr | 1 | 2007 | $13,317,500 | $ 13,317,500 | $ 12,977,845 | 236,902 | lb/hr | 1 | 236,902 | lb/hr | $ 12,900,791 | $ 12,900,791 |

Balance of Plant:

| Description | % of Total Cost | | | | | | Cost Per Train | Total Cost |
|---|---|---|---|---|---|---|---|---|
| Water Systems | 7.10% | | | | | | $ 915,956 | $ 915,956 |
| Civil/Structural/Buildings | 9.20% | | | | | | $ 1,186,873 | $ 1,186,873 |
| Piping | 7.10% | | | | | | $ 915,956 | $ 915,956 |
| Control and Instrumentation | 2.60% | | | | | | $ 335,421 | $ 335,421 |
| Electrical Systems | 8.00% | | | | | | $ 1,032,063 | $ 1,032,063 |
| | | | | | | Total Balance of Plant | $ 4,386,269 | $ 4,386,269 |
| | | | | | | Total Balance of Plant Plus the Selected Source | $ 17,287,060 | $ 17,287,060 |

Rationale for Selection:

Single source cost point. The allowances listed under 'Balance of Plant' are based on NETL 2000. These allowance values are comparable to additional published estimating guides, such as Page 1996.

Detail Item Report - CO2 Generation

| | | | |
|---|---|---|---|
| **Project Name:** | NGNP Process Integration | **Client:** | M. Patterson |
| **Process:** | HTSE Ammonia w/o ASU | **Prepared By:** | B. Wallace, R. Honsinger, J. Martin |
| **Estimate Number:** | MA36-O | **Estimate Type:** | Class 5 |

**Sources Considered:**

| Source | Reported Capacity | | Reported Trains | Report Cost Year | Reported Cost | Reporting Year Cost Per Train | Normalized Cost Per Train using CEPCI Index | Capacity Required | | Trains Reqd. | Capacity per Train | | Factored Cost per Train from Normalized Cost | Total Current Cost for Required Trains |
|---|---|---|---|---|---|---|---|---|---|---|---|---|---|---|
| CO2 Compression - Subcritical | | | | | | | | | | | | | | |
| Princeton Report (Kreutz 2008) | 10 | MW | 1 | 2007 | $ 6,310,000 | $ 6,310,000 | $ 6,149,067 | 2 | MW | 1 | 2 | MW | $ 2,329,179 | $ 2,329,179 |
| CO2 Compression - Supercritical | | | | | | | | | | | | | | |
| Princeton Report (Kreutz 2008) | 13 | MW | 1 | 2007 | $ 9,520,000 | $ 9,520,000 | $ 9,277,198 | 0.3 | MW | 1 | 0.3 | MW | $ 987,887 | $ 987,887 |
| CO2 Generation | | | | | | | | | | | | | | |
| CO2 Generator (Wood 2009) | 184,095 | lb/hr | 1 | 2007 | $ 8,102,200 | $ 8,102,200 | $ 7,895,558 | 184,021 | lb/hr | 1 | 184,021 | lb/hr | $ 7,893,654 | $ 7,893,654 |

**Source Selected:**

| Source | Reported Capacity | | Reported Trains | Report Cost Year | Reported Cost | Reporting Year Cost Per Train | Normalized Cost Per Train using CEPCI Index | Capacity Required | | Trains Reqd. | Capacity per Train | | Factored Cost per Train from Normalized Cost | Total Current Cost for Required Trains |
|---|---|---|---|---|---|---|---|---|---|---|---|---|---|---|
| Kreutz 2008: Combined Subcritical and Supercritical Processes | | | | | | | | | | | | | $ 11,210,720 | $ 11,210,720 |

**Balance of Plant:**

| Description | % of Total Cost | | | | | | Cost Per Train | Total Cost |
|---|---|---|---|---|---|---|---|---|
| Water Systems | 7.10% | | | | | | $ 795,961 | $ 795,961 |
| Civil/Structural/Buildings | 9.20% | | | | | | $ 1,031,386 | $ 1,031,386 |
| Piping | 7.10% | | | | | | $ 795,961 | $ 795,961 |
| Control and Instrumentation | 2.60% | | | | | | $ 291,479 | $ 291,479 |
| Electrical Systems | 8.00% | | | | | | $ 896,858 | $ 896,858 |
| | | | | | | Total Balance of Plant | $ 3,811,645 | $ 3,811,645 |
| | | | | | | Total Balance of Plant Plus the Selected Source | $ 15,022,364 | $ 15,022,364 |

**Rationale for Selection:**

Single source cost point. The only CO2 generation source considered was Wood 2009. This cost was supplemented with CO2 compression costs from Kreutz 2008 to represent a full island cost. Both subcritical and supercritical process costs were included under the CO2 Compression heading. The allowances listed under 'Balance of Plant' are based on NETL 2000. These allowance values are comparable to additional published estimating guides, su as Page 1996.

**Detail Item Report - Methanation**

| | | | |
|---|---|---|---|
| **Project Name:** | NGNP Process Integration | **Client:** | M. Patterson |
| **Process:** | HTSE Ammonia w/o ASU | **Prepared By:** | B. Wallace, R. Honsinger, J. Martin |
| **Estimate Number:** | MA36-O | **Estimate Type:** | Class 5 |

**Sources Considered:**

| Source | Reported Capacity | | Reported Trains | Report Cost Year | Reported Cost | Reporting Year Cost Per Train | Normalized Cost Per Train using CEPCI Index | Capacity Required | | Trains Reqd. | Capacity per Train | | Factored Cost per Train from Normalized Cost | Total Current Cost for Required Trains |
|---|---|---|---|---|---|---|---|---|---|---|---|---|---|---|
| DOE FE Report (DOE 1978) | 1,000 | tpd | 1 | 1978 | $ 1,467,000 | $ 1,467,000 | $ 3,432,834 | 3,360 | tpd | 1 | 3,360 | tpd | $ 7,103,237 | $ 7,103,237 |

**Source Selected:**

| Source | Reported Capacity | | Reported Trains | Report Cost Year | Reported Cost | Reporting Year Cost Per Train | Normalized Cost Per Train using CEPCI Index | Capacity Required | | Trains Reqd. | Capacity per Train | | Factored Cost per Train from Normalized Cost | Total Current Cost for Required Trains |
|---|---|---|---|---|---|---|---|---|---|---|---|---|---|---|
| DOE FE Report (DOE 1978) | 1,000 | tpd | 1 | 1978 | $ 1,467,000 | $ 1,467,000 | $ 3,432,834 | 3,360 | tpd | 1 | 3,360 | tpd | $ 7,103,237 | $ 7,103,237 |

**Balance of Plant:**

| Description | % of Total Cost | | | | | | | Cost Per Train | Total Cost |
|---|---|---|---|---|---|---|---|---|---|
| Water Systems | 7.10% | | | | | | | $ 504,330 | $ 504,330 |
| Civil/Structural/Buildings | 9.20% | | | | | | | $ 653,498 | $ 653,498 |
| Piping | 7.10% | | | | | | | $ 504,330 | $ 504,330 |
| Control and Instrumentation | 2.60% | | | | | | | $ 184,684 | $ 184,684 |
| Electrical Systems | 8.00% | | | | | | | $ 568,259 | $ 568,259 |
| | | | | | | | Total Balance of Plant | $ 2,415,101 | $ 2,415,101 |
| | | | | | | | Total Balance of Plant Plus the Selected Source | $ 9,518,338 | $ 9,518,338 |

**Rationale for Selection:**

Single source island cost identified by the project technical lead. The allowances listed under 'Balance of Plant' are based on NETL 2000. These allowance values are comparable to additional published estimating guides, such Page 1996.

**Detail Item Report - Ammonia Synthesis**

| | | | |
|---|---|---|---|
| **Project Name:** | NGNP Process Integration | **Client:** | M. Patterson |
| **Process:** | HTSE Ammonia w/o ASU | **Prepared By:** | B. Wallace, R. Honsinger, J. Martin |
| **Estimate Number:** | MA36-O | **Estimate Type:** | Class 5 |

**Sources Considered:**

| Source | Reported Capacity | | Reported Trains | Report Cost Year | Reported Cost | Reporting Year Cost Per Train | Normalized Cost Per Train using CEPCI Index | Capacity Required | | Trains Reqd. | Capacity per Train | | Factored Cost per Train from Normalized Cost | Total Current Cost for Required Trains |
|---|---|---|---|---|---|---|---|---|---|---|---|---|---|---|
| Vendor - Verbal 2009 | 360 | tpd | 1 | 2009 | $ 44,000,000 | $ 44,000,000 | $ 44,000,000 | 3,360 | tpd | 2 | 1,680 | tpd | $ 110,880,901 | $ 221,761,801 |
| Economics Ammonia Coal Gasification (Morel 1977) | 1,000 | tpd | 1 | 1977 | $ 50,748,000 | $ 50,748,000 | $ 80,243,904 | 3,360 | tpd | 2 | 1,680 | tpd | $ 109,546,276 | $ 219,092,551 |
| Stamicarbon, Middle East Fertilizer Symposium, March 2009 | 4,297 | tpd | 1 | 2008 | $ 800,000,000 | $ 800,000,000 | $ 779,596,498 | 3,360 | tpd | 2 | 1,680 | tpd | $ 443,768,260 | $ 887,536,519 |
| Ammonia, Chem Systems, 1998 | 1,653 | tpd | 1 | 1998 | $ 160,000,000 | $ 160,000,000 | $ 210,320,924 | 3,360 | tpd | 2 | 1,680 | tpd | $ 212,375,463 | $ 424,750,926 |

**Source Selected:**

| Source | Reported Capacity | | Reported Trains | Report Cost Year | Reported Cost | Reporting Year Cost Per Train | Normalized Cost Per Train using CEPCI Index | Capacity Required | | Trains Reqd. | Capacity per Train | | Factored Cost per Train from Normalized Cost | Total Current Cost for Required Trains |
|---|---|---|---|---|---|---|---|---|---|---|---|---|---|---|
| Vendor - Verbal 2009 | 360 | tpd | 1 | 2009 | $ 44,000,000 | $ 44,000,000 | $ 44,000,000 | 3,360 | tpd | 2 | 1,680 | tpd | $ 110,880,901 | $ 221,761,801 |

**Balance of Plant:**

| Description | % of Total Cost | | | | | | | Cost Per Train | Total Cost |
|---|---|---|---|---|---|---|---|---|---|
| Water Systems | 7.10% | | | | | | | $ 7,872,544 | $ 15,745,088 |
| Civil/Structural/Buildings | 9.20% | | | | | | | $ 10,201,043 | $ 20,402,086 |
| Piping | 7.10% | | | | | | | $ 7,872,544 | $ 15,745,088 |
| Control and Instrumentation | 2.60% | | | | | | | $ 2,882,903 | $ 5,765,807 |
| Electrical Systems | 8.00% | | | | | | | $ 8,870,472 | $ 17,740,944 |
| | | | | | | | Total Balance of Plant | $ 37,699,506 | $ 75,399,012 |
| | | | | | | | Total Balance of Plant Plus the Selected Source | $ 148,580,407 | $ 297,160,814 |

**Rationale for Selection:**

The verbal cost was selected as recommended by the project team expert. The Stamicarbon information shows a roughly 350% increase in prices between 2003 and 2008 emphasizing the importance of using the most recent information available. The allowances listed under 'Balance of Plant' are based on NETL 2000. These allowance values are comparable to additional published estimating guides, such as Page 1996.

**Detail Item Report - Urea Synthesis**

| | | | |
|---|---|---|---|
| **Project Name:** | NGNP Process Integration | **Client:** | M. Patterson |
| **Process:** | HTSE Ammonia w/o ASU | **Prepared By:** | B. Wallace, R. Honsinger, J. Martin |
| **Estimate Number:** | MA36-O | **Estimate Type:** | Class 5 |

**Sources Considered:**

| Source | Reported Capacity | | Reported Trains | Report Cost Year | Reported Cost | Reporting Year Cost Per Train | Normalized Cost Per Train using CEPCI Index | Capacity Required | | Trains Reqd. | Capacity per Train | | Factored Cost per Train from Normalized Cost | Total Current Cost for Required Trains |
|---|---|---|---|---|---|---|---|---|---|---|---|---|---|---|
| Vendor - Verbal 2009 | 625 | tpd | 1 | 2009 | $ 85,000,000 | $ 85,000,000 | $ 85,000,000 | 2,939 | tpd | 1 | 2,939 | tpd | $ 215,184,342 | $ 215,184,342 |
| Perry's Chemical Engineering Handbook, 7th Edition | 200 | tpd | 1 | 1994 | $ 8,800,000 | $ 8,800,000 | $ 12,240,152 | 2,939 | tpd | 1 | 2,939 | tpd | $ 61,388,719 | $ 61,388,719 |
| PNNL | 4681 | tpd | 1 | 2009 | $ 182,000,000 | $ 182,000,000 | $ 182,000,000 | 2,939 | tpd | 1 | 2,939 | tpd | $ 137,653,721 | $ 137,653,721 |
| Stamicarbon, Middle East Fertilizer Symposium, March 2009 | 3,582 | tpd | 1 | 2008 | $ 550,000,000 | $ 550,000,000 | $ 535,972,592 | 2,939 | tpd | 1 | 2,939 | tpd | $ 475,978,115 | $ 475,978,115 |

**Source Selected:**

| Source | Reported Capacity | | Reported Trains | Report Cost Year | Reported Cost | Reporting Year Cost Per Train | Normalized Cost Per Train using CEPCI Index | Capacity Required | | Trains Reqd. | Capacity per Train | | Factored Cost per Train from Normalized Cost | Total Current Cost for Required Trains |
|---|---|---|---|---|---|---|---|---|---|---|---|---|---|---|
| Vendor - Verbal 2009 | 625 | tpd | 1 | 2009 | $ 85,000,000 | $ 85,000,000 | $ 85,000,000 | 2,939 | tpd | 1 | 2,939 | tpd | $ 215,184,342 | $ 215,184,342 |

**Balance of Plant:**

| Description | % of Total Cost | | | | | | | Cost Per Train | Total Cost |
|---|---|---|---|---|---|---|---|---|---|
| Water Systems | 7.10% | | | | | | | $ 15,278,088 | $ 15,278,088 |
| Civil/Structural/Buildings | 9.20% | | | | | | | $ 19,796,959 | $ 19,796,959 |
| Piping | 7.10% | | | | | | | $ 15,278,088 | $ 15,278,088 |
| Control and Instrumentation | 2.60% | | | | | | | $ 5,594,793 | $ 5,594,793 |
| Electrical Systems | 8.00% | | | | | | | $ 17,214,747 | $ 17,214,747 |
| | | | | | | | Total Balance of Plant | $ 73,162,676 | $ 73,162,676 |
| | | | | | | | Total Balance of Plant Plus the Selected Source | $ 288,347,019 | $ 288,347,019 |

**Rationale for Selection:**

The verbal cost was selected as recommended by the project team expert. The Stamicarbon information shows a roughly 350% increase in prices between 2003 and 2008 emphasizing the importance of using the most recent information available. The allowances listed under 'Balance of Plant' are based on NETL 2000. These allowance values are comparable to additional published estimating guides, such as Page 1996.

Detail Item Report - Nitric Acid Synthesis

| | | | |
|---|---|---|---|
| **Project Name:** | NGNP Process Integration | **Client:** | M. Patterson |
| **Process:** | HTSE Ammonia w/o ASU | **Prepared By:** | B. Wallace, R. Honsinger, J. Martin |
| **Estimate Number:** | MA36-O | **Estimate Type:** | Class 5 |

**Sources Considered:**

| Source | Reported Capacity | | Reported Trains | Report Cost Year | Reported Cost | Reporting Year Cost Per Train | Normalized Cost Per Train using CEPCI Index | Capacity Required | | Trains Reqd. | Capacity per Train | | Factored Cost per Train from Normalized Cost | Total Current Cost for Required Trains |
|---|---|---|---|---|---|---|---|---|---|---|---|---|---|---|
| Perry's Chemical Engineering Handbook, 7th Edition | 334 | tpd | 1 | 1994 | $ 6,600,000 | $ 6,600,000 | $ 9,180,114 | 5,192 | tpd | 6 | 865 | tpd | $ 16,252,129 | $ 97,512,774 |
| Fertilizer Manual | 359 | tpd | 1 | 1998 | $ 15,200,000 | $ 15,200,000 | $ 19,980,488 | 5,192 | tpd | 6 | 865 | tpd | $ 33,851,959 | $ 203,111,753 |

**Source Selected:**

| Source | Reported Capacity | | Reported Trains | Report Cost Year | Reported Cost | Reporting Year Cost Per Train | Normalized Cost Per Train using CEPCI Index | Capacity Required | | Trains Reqd. | Capacity per Train | | Factored Cost per Train from Normalized Cost | Total Current Cost for Required Trains |
|---|---|---|---|---|---|---|---|---|---|---|---|---|---|---|
| Fertilizer Manual | 359 | tpd | 1 | 1998 | $ 15,200,000 | $ 15,200,000 | $ 19,980,488 | 5,192 | tpd | 6 | 865 | tpd | $ 33,851,959 | $ 203,111,753 |

**Balance of Plant:**

| Description | % of Total Cost | | | | | | Cost Per Train | Total Cost |
|---|---|---|---|---|---|---|---|---|
| Water Systems | 7.10% | | | | | | $ 2,403,489 | $ 14,420,934 |
| Civil/Structural/Buildings | 9.20% | | | | | | $ 3,114,380 | $ 18,686,281 |
| Piping | 7.10% | | | | | | $ 2,403,489 | $ 14,420,934 |
| Control and Instrumentation | 2.60% | | | | | | $ 880,151 | $ 5,280,906 |
| Electrical Systems | 8.00% | | | | | | $ 2,708,157 | $ 16,248,940 |
| | | | | | | Total Balance of Plant | $ 11,509,666 | $ 69,057,996 |
| | | | | | | Total Balance of Plant Plus the Selected Source | $ 45,361,625 | $ 272,169,749 |

**Rationale for Selection:**

The Fertilizer Manual was selected for being both the newest cost point and the most conservative. The data from Perry's Chemical Engineering Handbook is based on earlier data from Peters and Timmerhaus, making it even less desirable. The allowances listed under 'Balance of Plant' are based on NETL 2000. These allowance values are comparable to additional published estimating guides, such as Page 1996.

Detail Item Report - Ammonium Nitrate Synthesis

| | | | |
|---|---|---|---|
| Project Name: | NGNP Process Integration | Client: | M. Patterson |
| Process: | HTSE Ammonia w/o ASU | Prepared By: | B. Wallace, R. Honsinger, J. Martin |
| Estimate Number: | MA36-O | Estimate Type: | Class 5 |

**Sources Considered:**

| Source | Reported Capacity | | Reported Trains | Report Cost Year | Reported Cost | Reporting Year Cost Per Train | Normalized Cost Per Train using CEPCI Index | Capacity Required | | Trains Reqd. | Capacity per Train | | Factored Cost per Train from Normalized Cost | Total Current Cost for Required Trains |
|---|---|---|---|---|---|---|---|---|---|---|---|---|---|---|
| Perry's Chemical Engineering Handbook, 7th Edition | 334 | tpd | 1 | 1994 | $ 6,000,000 | $ 6,000,000 | $ 8,345,558 | 3,779 | tpd | 3 | 1,260 | tpd | $ 18,507,052 | $ 55,521,157 |
| Fertilizer Manual | 1,395 | tpd | 1 | 1998 | $ 35,000,000 | $ 35,000,000 | $ 46,007,702 | 3,779 | tpd | 3 | 1,260 | tpd | $ 43,270,765 | $ 129,812,295 |
| EPA Report | 1,200 | tpd | 1 | 1981 | $ 9,480,000 | $ 9,480,000 | $ 13,434,154 | 3,779 | tpd | 3 | 1,260 | tpd | $ 13,831,044 | $ 41,493,133 |

**Source Selected:**

| Source | Reported Capacity | | Reported Trains | Report Cost Year | Reported Cost | Reporting Year Cost Per Train | Normalized Cost Per Train using CEPCI Index | Capacity Required | | Trains Reqd. | Capacity per Train | | Factored Cost per Train from Normalized Cost | Total Current Cost for Required Trains |
|---|---|---|---|---|---|---|---|---|---|---|---|---|---|---|
| Fertilizer Manual | 1,395 | tpd | 1 | 1998 | $ 35,000,000 | $ 35,000,000 | $ 46,007,702 | 3,779 | tpd | 3 | 1,260 | tpd | $ 43,270,765 | $ 129,812,295 |

**Balance of Plant:**

| Description | % of Total Cost | | | | | | Cost Per Train | Total Cost |
|---|---|---|---|---|---|---|---|---|
| Water Systems | 7.10% | | | | | | $ 3,072,224 | $ 9,216,673 |
| Civil/Structural/Buildings | 9.20% | | | | | | $ 3,980,910 | $ 11,942,731 |
| Piping | 7.10% | | | | | | $ 3,072,224 | $ 9,216,673 |
| Control and Instrumentation | 2.60% | | | | | | $ 1,125,040 | $ 3,375,120 |
| Electrical Systems | 8.00% | | | | | | $ 3,461,661 | $ 10,384,984 |
| | | | | | | Total Balance of Plant | $ 14,712,060 | $ 44,136,180 |
| | | | | | | Total Balance of Plant Plus the Selected Source | $ 57,982,825 | $ 173,948,476 |

**Rationale for Selection:**

The Fertilizer Manual was selected for being both the newest cost point and the most conservative. The data from Perry's Chemical Engineering Handbook is based on earlier data from Peters and Timmerhaus, making it even less desirable. The allowances listed under 'Balance of Plant' are based on NETL 2000. These allowance values are comparable to additional published estimating guides, such as Page 1996.

**Detail Item Report - Steam Turbines**

| | | | |
|---|---|---|---|
| **Project Name:** | NGNP Process Integration | **Client:** | M. Patterson |
| **Process:** | HTSE Ammonia w/o ASU | **Prepared By:** | B. Wallace, R. Honsinger, J. Martin |
| **Estimate Number:** | MA36-O | **Estimate Type:** | Class 5 |

**Sources Considered:**

| Source | Reported Capacity | | Reported Trains | Report Cost Year | Reported Cost | Reporting Year Cost Per Train | Normalized Cost Per Train using CEPCI Index | Capacity Required | | Trains Reqd. | Capacity per Train | | Factored Cost per Train from Normalized Cost | Total Current Cost for Required Trains |
|---|---|---|---|---|---|---|---|---|---|---|---|---|---|---|
| Steam Turbine and HRSG | | | | | | | | | | | | | | |
| Shell IGCC Base Cases (NETL 2000) | 189 | MW | 1 | 1999 | $ 50,671,000 | $ 50,671,000 | $ 66,419,744 | 159 | MW | 1 | 159 | MW | $ 59,899,366 | $ 59,899,366 |
| Steam Turbine | | | | | | | | | | | | | | |
| NETL Baseline Report (NETL 2007a) | 401 | MW | 4 | 2006 | $ 74,651,000 | $ 18,662,750 | $ 19,125,957 | 159 | MW | 1 | 159 | MW | $ 25,233,335 | $ 25,233,335 |
| Princeton Report (Kreutz 2008) | 275 | MW | 1 | 2007 | $ 66,700,000 | $ 66,700,000 | $ 64,998,858 | 159 | MW | 1 | 159 | MW | $ 46,806,721 | $ 46,806,721 |
| Shell IGCC Power Plant with CO2 Capture (NETL 2007b) | 230 | MW | 1 | 2006 | $ 44,515,000 | $ 44,515,000 | $ 45,619,856 | 159 | MW | 1 | 159 | MW | $ 36,576,204 | $ 36,576,204 |

**Source Selected:**

| Source | Reported Capacity | | Reported Trains | Report Cost Year | Reported Cost | Reporting Year Cost Per Train | Normalized Cost Per Train using CEPCI Index | Capacity Required | | Trains Reqd. | Capacity per Train | | Factored Cost per Train from Normalized Cost | Total Current Cost for Required Trains |
|---|---|---|---|---|---|---|---|---|---|---|---|---|---|---|
| Shell IGCC Power Plant with CO2 Capture (NETL 2007b) | 230 | MW | 1 | 2006 | $ 44,515,000 | $ 44,515,000 | $ 45,619,856 | 159 | MW | 1 | 159 | MW | $ 36,576,204 | $ 36,576,204 |

**Balance of Plant:**

| Description | % of Total Cost | | | | | | Cost Per Train | Total Cost |
|---|---|---|---|---|---|---|---|---|
| Water Systems | 7.10% | | | | | | $ 2,596,910 | $ 2,596,910 |
| Civil/Structural/Buildings | 9.20% | | | | | | $ 3,365,011 | $ 3,365,011 |
| Piping | 7.10% | | | | | | $ 2,596,910 | $ 2,596,910 |
| Control and Instrumentation | 2.60% | | | | | | $ 950,981 | $ 950,981 |
| Electrical Systems | 8.00% | | | | | | $ 2,926,096 | $ 2,926,096 |
| | | | | | | Total Balance of Plant | $ 12,435,909 | $ 12,435,909 |
| | | | | | | Total Balance of Plant Plus the Selected Source | $ 49,012,114 | $ 49,012,114 |

**Rationale for Selection:**

Shell IGCC PowerPlant with CO2 Capture (NETL 2007b) is a recently reported cost point that closely reflects this project's requirements. The Princeton Report (Kreutz 2008) source for the steam turbine cost point is the NETL 2007b report. The allowances listed under 'Balance of Plant' are based on NETL 2000. These allowance values are comparable to additional published estimating guides, such as Page 1996.

**Detail Item Report - HRSG**

| | | | |
|---|---|---|---|
| **Project Name:** | NGNP Process Integration | **Client:** | M. Patterson |
| **Process:** | HTSE Ammonia w/o ASU | **Prepared By:** | B. Wallace, R. Honsinger, J. Martin |
| **Estimate Number:** | MA36-O | **Estimate Type:** | Class 5 |

**Sources Considered:**

| Source | Reported Capacity | | Reported Trains | Report Cost Year | Reported Cost | Reporting Year Cost Per Train | Normalized Cost Per Train using CEPCI Index | Capacity Required | | Trains Reqd. | Capacity per Train | | Factored Cost per Train from Normalized Cost | Total Current Cost for Required Trains |
|---|---|---|---|---|---|---|---|---|---|---|---|---|---|---|
| Steam Turbine and HRSG | | | | | | | | | | | | | | |
| Shell IGCC Base Cases (NETL 2000) | 189 | MW | 1 | 1999 | $ 50,671,000 | $ 50,671,000 | $ 66,419,744 | - | MW | 1 | - | MW | $ - | $ - |
| HRSG | | | | | | | | | | | | | | |
| NETL Baseline Report (NETL 2007a) | 5,155,983 | lb/hr | 3 | 2006 | $ 27,581,000 | $ 9,193,667 | $ 9,421,852 | - | lb/hr | 1 | - | lb/hr | $ - | $ - |
| Princeton Report (Kreutz 2008) | 355 | MW | 1 | 2007 | $ 52,000,000 | $ 52,000,000 | $ 50,673,772 | - | MW | 1 | - | MW | $ - | $ - |
| Shell IGCC Power Plant with CO2 Capture (NETL 2007b) | 8,438,000 | lb/hr | 2 | 2006 | $ 45,291,000 | $ 22,645,500 | $ 23,207,558 | - | lb/hr | 1 | - | lb/hr | $ - | $ - |

**Source Selected:**

| Source | Reported Capacity | | Reported Trains | Report Cost Year | Reported Cost | Reporting Year Cost Per Train | Normalized Cost Per Train using CEPCI Index | Capacity Required | | Trains Reqd. | Capacity per Train | | Factored Cost per Train from Normalized Cost | Total Current Cost for Required Trains |
|---|---|---|---|---|---|---|---|---|---|---|---|---|---|---|
| Shell IGCC Power Plant with CO2 Capture (NETL 2007b) | 8,438,000 | lb/hr | 2 | 2006 | $ 45,291,000 | $ 22,645,500 | $ 23,207,558 | - | lb/hr | 1 | - | lb/hr | $ - | $ - |

**Balance of Plant:**

| Description | % of Total Cost | | | | | | Cost Per Train | Total Cost |
|---|---|---|---|---|---|---|---|---|
| Water Systems | 7.10% | | | | | | $ - | $ - |
| Civil/Structural/Buildings | 9.20% | | | | | | $ - | $ - |
| Piping | 7.10% | | | | | | $ - | $ - |
| Control and Instrumentation | 2.60% | | | | | | $ - | $ - |
| Electrical Systems | 8.00% | | | | | | $ - | $ - |
| | | | | | | Total Balance of Plant | $ - | $ - |
| | | | | | | Total Balance of Plant Plus the Selected Source | $ - | $ - |

**Rationale for Selection:**

Shell IGCC PowerPlant with CO2 Capture (NETL 2007b) is a recently reported cost point that closely reflects this project's requirements. The Princeton Report (Kreutz 2008) source for the steam turbine cost point is the NETL 2007b report. The allowances listed under 'Balance of Plant' are based on NETL 2000. These allowance values are comparable to additional published estimating guides, such as Page 1996.

**Detail Item Report - Cooling Towers**

| | | | |
|---|---|---|---|
| **Project Name:** | NGNP Process Integration | **Client:** | M. Patterson |
| **Process:** | HTSE Ammonia w/o ASU | **Prepared By:** | B. Wallace, R. Honsinger, J. Martin |
| **Estimate Number:** | MA36-O | **Estimate Type:** | Class 5 |

**Sources Considered:**

| Source | Reported Capacity | | Reported Trains | Report Cost Year | Reported Cost | Reporting Year Cost Per Train | Normalized Cost Per Train using CEPCI Index | Capacity Required | | Trains Reqd. | Capacity per Train | | Factored Cost per Train from Normalized Cost | Total Current Cost for Required Trains |
|---|---|---|---|---|---|---|---|---|---|---|---|---|---|---|
| Cooling Tower Depot | 182,142 | gpm | 5 | 2009 | $ 4,611,840 | $ 922,368 | $ 922,368 | 160,853 | gpm | 5 | 32,171 | gpm | $ 856,084 | $ 4,280,419 |

**Source Selected:**

| Source | Reported Capacity | | Reported Trains | Report Cost Year | Reported Cost | Reporting Year Cost Per Train | Normalized Cost Per Train using CEPCI Index | Capacity Required | | Trains Reqd. | Capacity per Train | | Factored Cost per Train from Normalized Cost | Total Current Cost for Required Trains |
|---|---|---|---|---|---|---|---|---|---|---|---|---|---|---|
| Cooling Tower Depot | 182,142 | gpm | 5 | 2009 | $ 4,611,840 | $ 922,368 | $ 922,368 | 160,853 | gpm | 5 | 32,171 | gpm | $ 856,084 | $ 4,280,419 |

**Balance of Plant:**

| Description | % of Total Cost | | | | | | Cost Per Train | Total Cost |
|---|---|---|---|---|---|---|---|---|
| Water Systems | 7.10% | | | | | | $ 60,782 | $ 303,910 |
| Civil/Structural/Buildings | 9.20% | | | | | | $ 78,760 | $ 393,799 |
| Piping | 7.10% | | | | | | $ 60,782 | $ 303,910 |
| Control and Instrumentation | 2.60% | | | | | | $ 22,258 | $ 111,291 |
| Electrical Systems | 8.00% | | | | | | $ 68,487 | $ 342,434 |
| | | | | | | Total Balance of Plant | $ 291,069 | $ 1,455,343 |
| | | | | | | Total Balance of Plant Plus the Selected Source | $ 1,147,152 | $ 5,735,762 |

**Rationale for Selection:**

Single source cost. Publically available current data. Calculated capital costs based on publically available cost data from a vendor regularly engaged in the building of cooling towers. The allowances listed under 'Balance of Pla are based on NETL 2000. These allowance values are comparable to additional published estimating guides, such as Page 1996.