Developing Energy Surety Microgrids for Military Applications

Mike Hightower
Energy Systems Analysis Department
Sandia National Laboratories
Phone: 505-844-5499
Email: mmhight@sandia.gov

Sandia is a multiprogram laboratory operated by Sandia Corporation, a Lockheed Martin Company, for the United States Department of Energy's National Nuclear Security Administration under contract DE-AC04-94AL85000.

Sandia National Laboratories

Typical Topology for Fixed Electric Power Installations

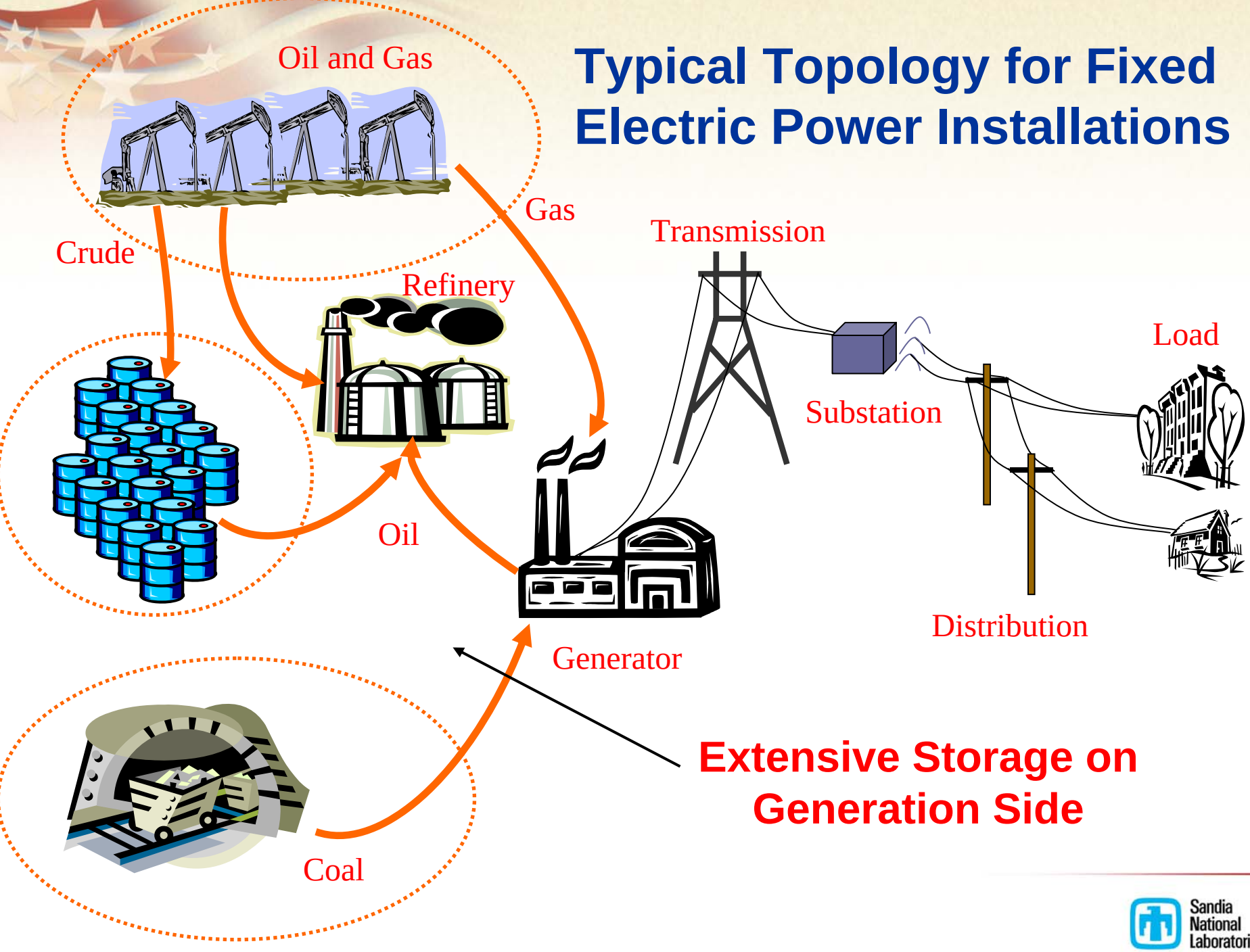

Extensive Storage on Generation Side

Sandia National Laboratories

Base Electric Power Reliability Issues

- **Power outages occurring as many as 300 times per year at some bases**
  - Low maintenance and understanding of back up generation
    - *Low probability of start when needed (60%)*
    - *Operations for extended periods limited*
- **Radial electric power feeder systems could provide redundancy but are not interconnected**
  - Poor understanding of base energy grid
- **Base substations often outside of base fence**
  - Often are common point of failure for all feeders
- **Lack of critical mission capability understanding, energy duration needed**
  - Various roles for base commander, tenent commanders, utility managers

Lack of Common Energy Security and Reliability Strategy

Sandia National Laboratories

Energy Infrastructure Security and Protection Issues and Challenges

Front

Common Energy Pipeline Security Approach

Back

Sandia National Laboratories

Energy System Reliability and Vulnerability Issues

- **Southwest Army base served by two feeders**
- **May 2002 forest fire takes out both feeders**
- **Base down for 16 hours**
  - Est. cost $3M
  - Loss of mission capability

- **Southwest semiconductor plant served by two feeders**
- **Forest fire takes out both feeders**
- **Chip fab shuts down for 3 months**
  - High-value customers cancel orders due to delay
  - Economic loss forces plant to shut down permanently

Sandia National Laboratories

Common DoD Electric Distribution Representation

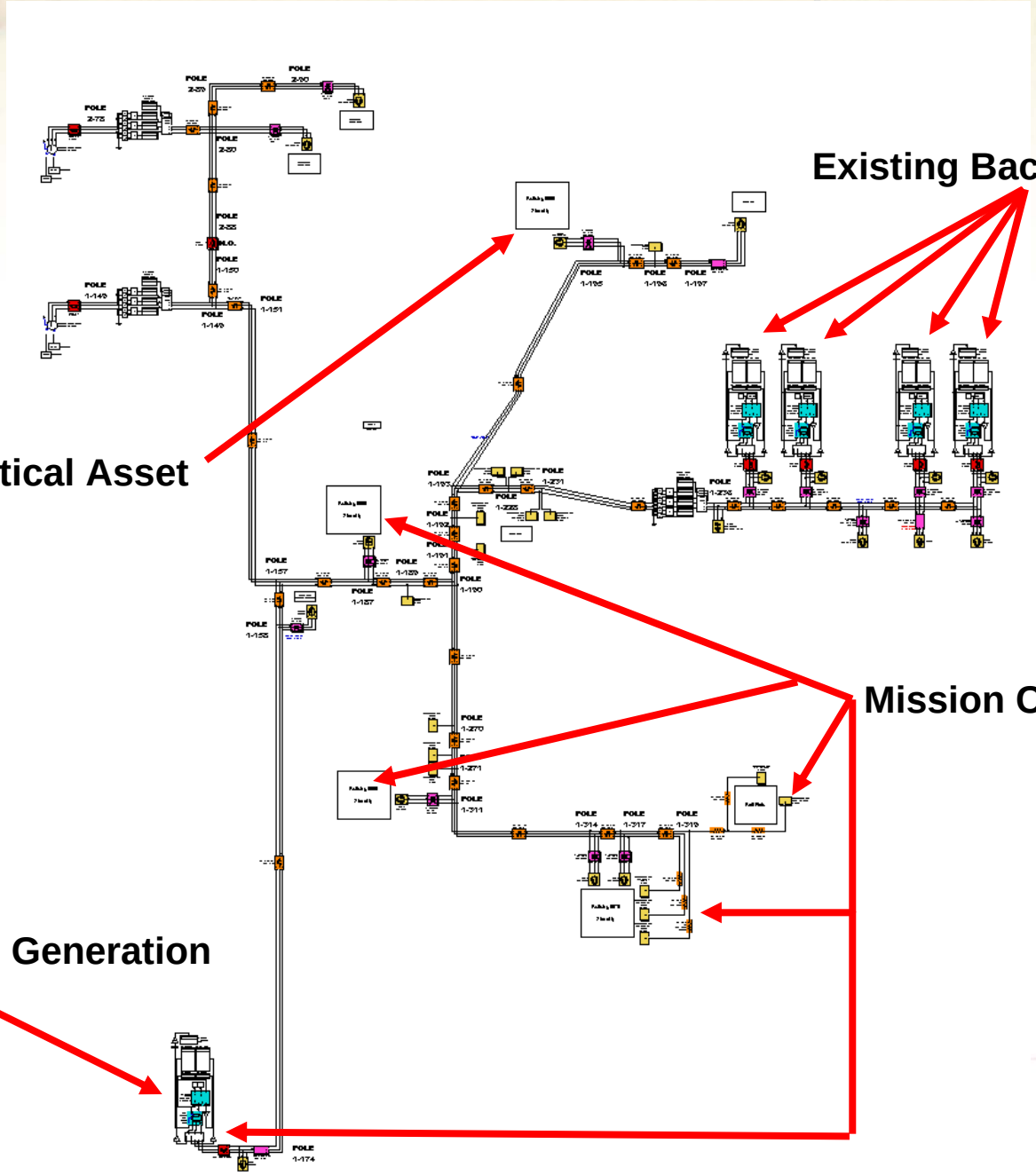

Sandia National Laboratories

Energy Surety Microgrid

With distributed generation and storage, electric power can be provided when the grid is down

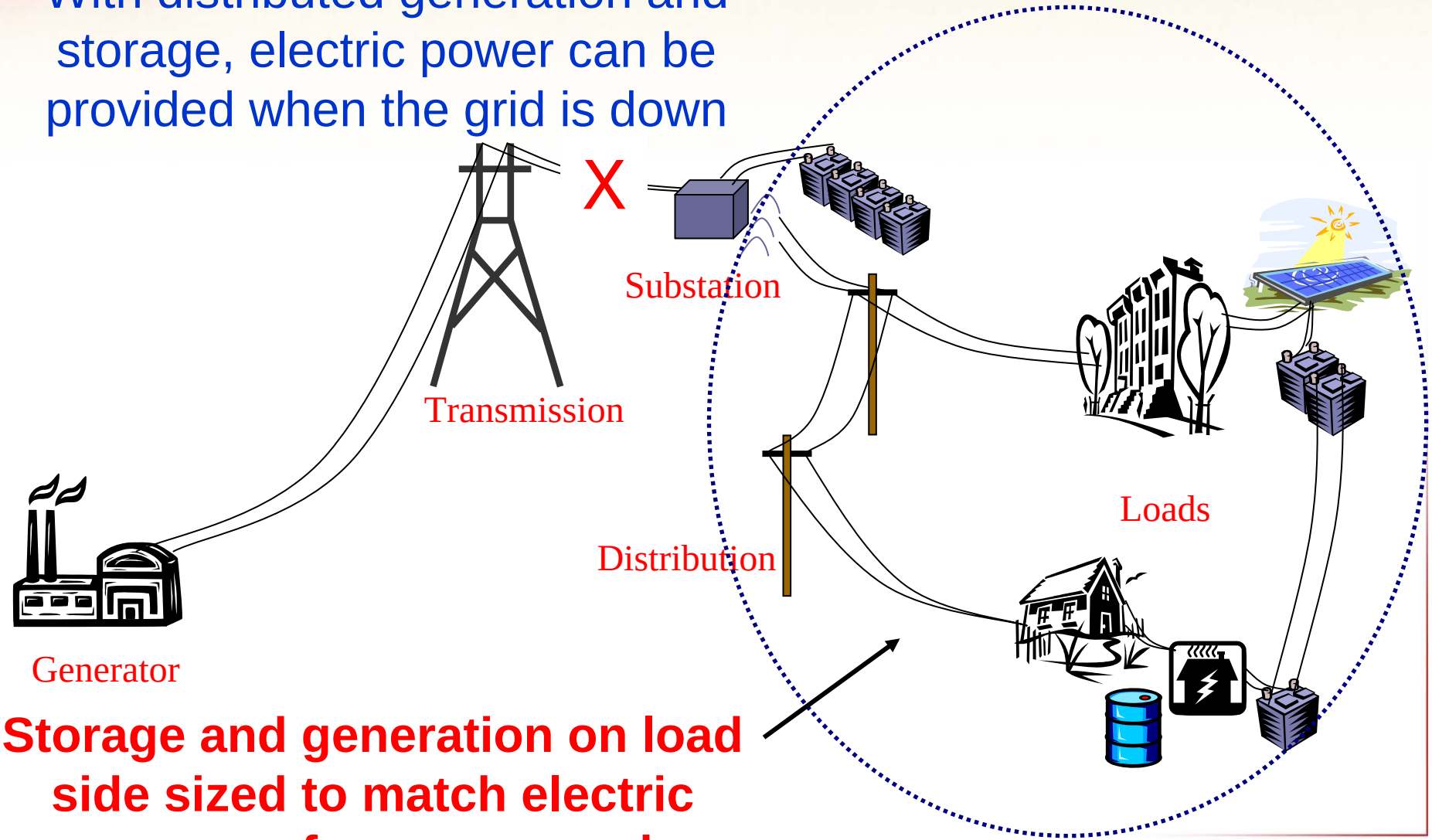

Storage and generation on load side sized to match electric power <u>performance</u> needs

Sandia National Laboratories

Renewable and Distributed Generation Supporting Microgrids and the Smart Grid

- Small combustion and µ-turbines
- Fuel cells
- IC engines
- Small hydro and wind
- Solar electric and solar thermal
- Energy storage (batteries, flywheels,…)
- Plug in hybrid vehicles

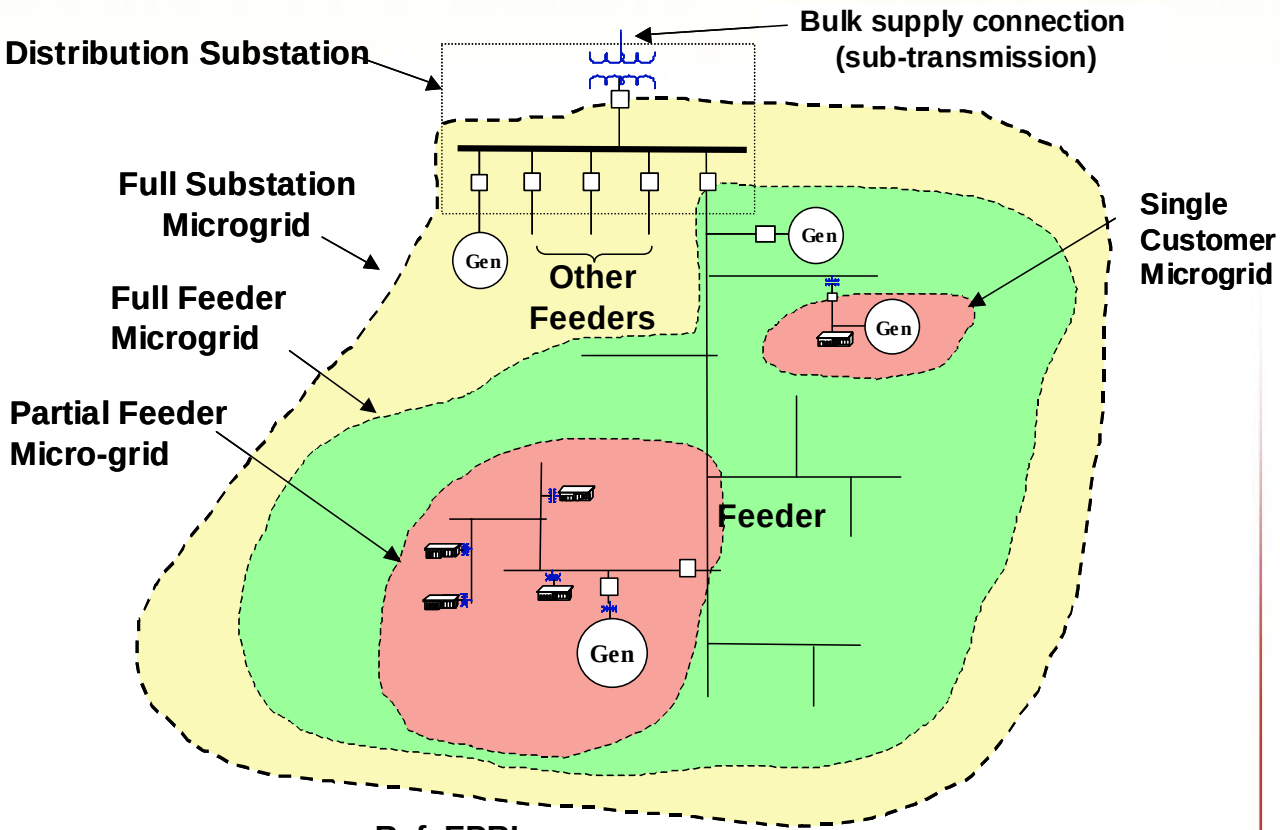

Ref. EPRI

Residential	Less than 10-kW, single-phase
Small Commercial	From 10-kW to 50-kW, typically three phase
Commercial	Greater than 50-kW up to 10MW

Sandia National Laboratories

Sandia Microgrid R&D Focus

- **Distributed generation and energy storage integration modeling to identify critical mission energy security requirements**
- **Microgrid system design and operations research and testing**
  - Load management and control strategies
  - Generation resource management for individual performance and power quality optimization
  - Control system cyber security
  - Safety requirements and systems to support grid-tied and islanded operations

Sandia Energy Futures Organization

6337
Solar Technologies
Jeff Nelson

6335
Solar Systems Department
Charlie Hanley, Acting

6333
Wind Energy Technology
Jose Zayas

6331
Geothermal Research
Douglas Blankenship

6336
Energy Infrastructure & DER
John Boyes

6332
Energy Systems Analysis
Juan Torres

6338
Fuels & Energy Transitions
Ellen Stechel

Sandia National Laboratories

Distributed Energy Technology Lab

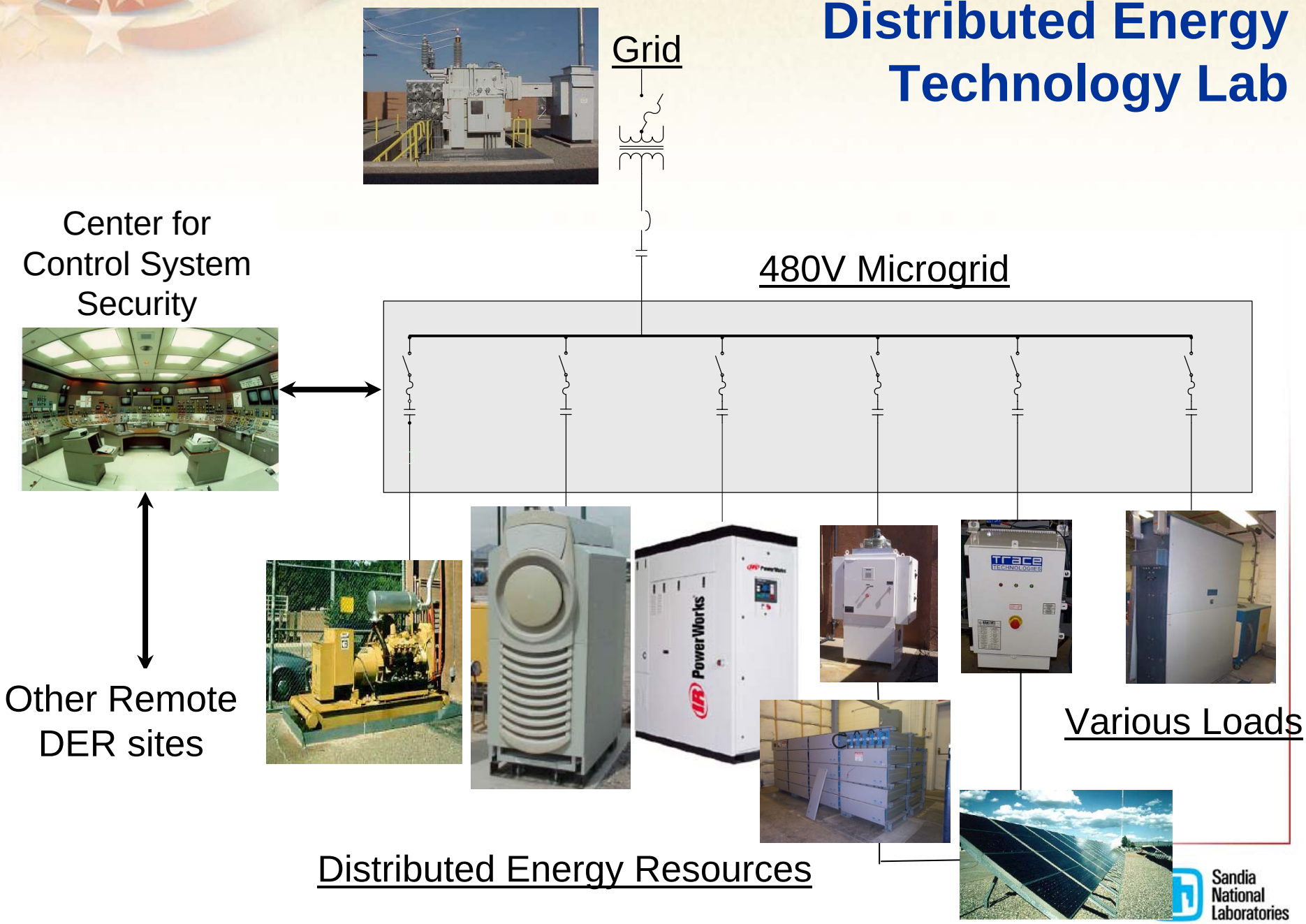

Complexity of Microgrids with Intelligence and Control

System for Supporting Advanced Distribution Infrastructure Operations

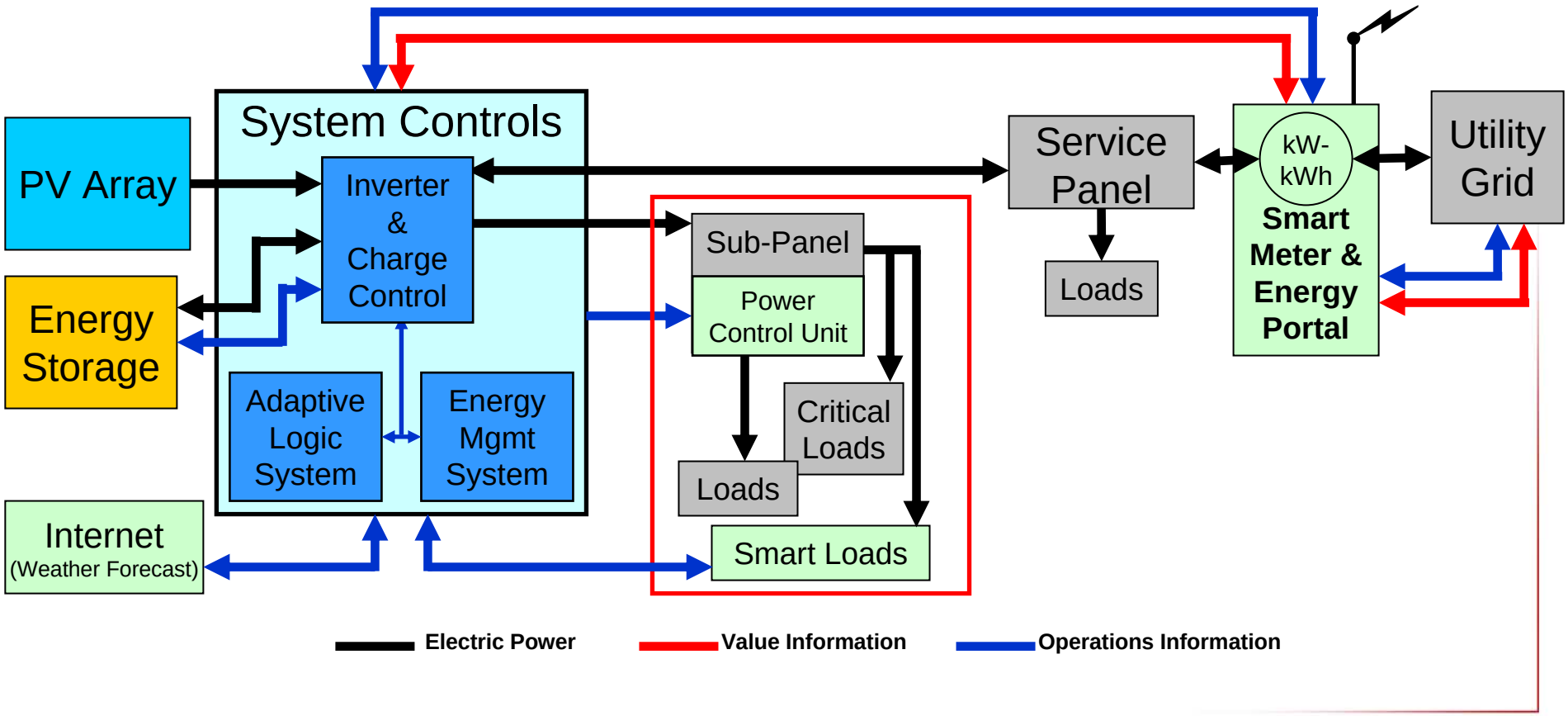

Sandia National Laboratories

Consequence Modeling

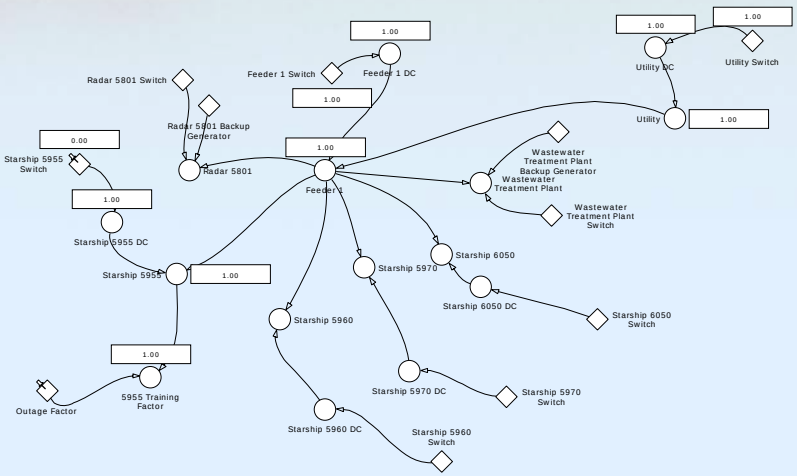

Electric System Model

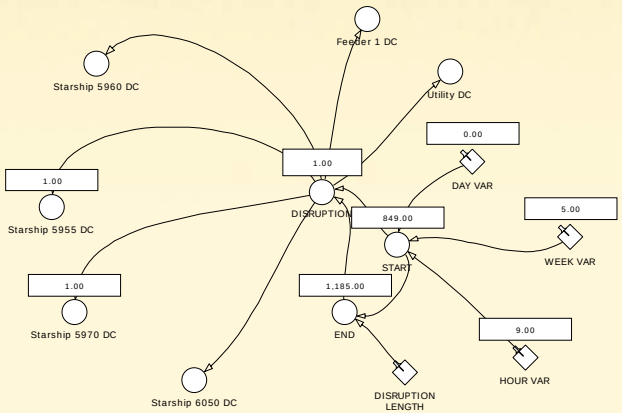

Interruption Control Model

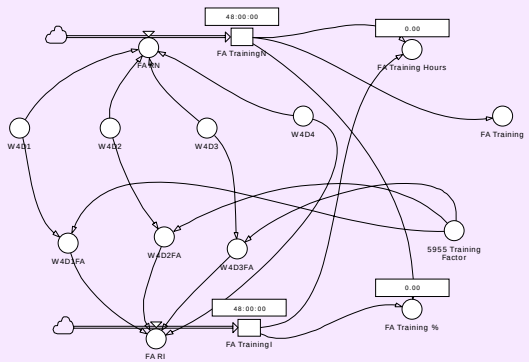

Mission Consequence Model

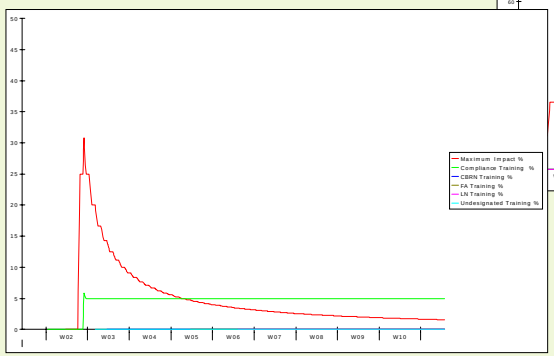

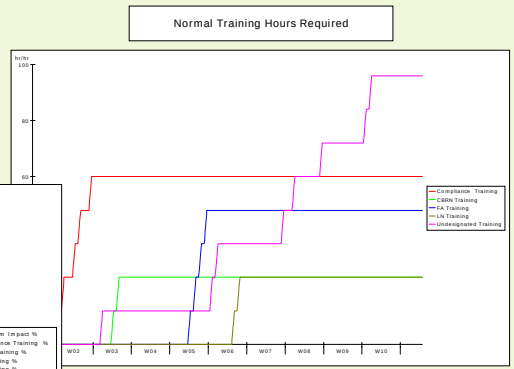

Mission Impacts

Sandia National Laboratories

Sandia Efforts with DoD on Microgrid Conceptual Designs and Implementaiton

- **Funding from DOE/OE and FEMP to conduct microgrid conceptual design efforts at military installations**
  - Reviews underway at Ft. Belvoir 300 Area, Ft. Devens, Ft. Sill, Maxwell AFB, and Indian Head NSWC
  - Efforts proceeding at Ft. Carson, Ft. Bliss, Camp Smith, and Pacific Missile Test Range (Kauai Test Facility)
  - Approximately $150K efforts with often DoD matching funds
  - Includes risk assessment and consequence modeling analysis for site-specific critical mission energy needs, power flow moding, and option and cost assessments
- **Provideing basic information for IMCOM or other types of installation upgrade funding proposals**

How to Improve Energy Surety at a Military Installation

- **Develop an effective energy surety strategy**
  - Include both physical and cyber security, such that upgrades actually improve system performance
- **Identify critical mission energy needs**
  - Buildings and durations can vary over time
- **Match energy system assets (<u>all</u> generation and storage) to meet critical mission energy performance needs**
  - Drives the location, size, and integration of resources
- **For flexibility and performance assurance, design for "grid-tied" and "islanded" system operations**
  - Has cost and reliability benefits, but safety and cyber issues

Sandia National Laboratories

Risk-based Assessment Approach for Energy Systems

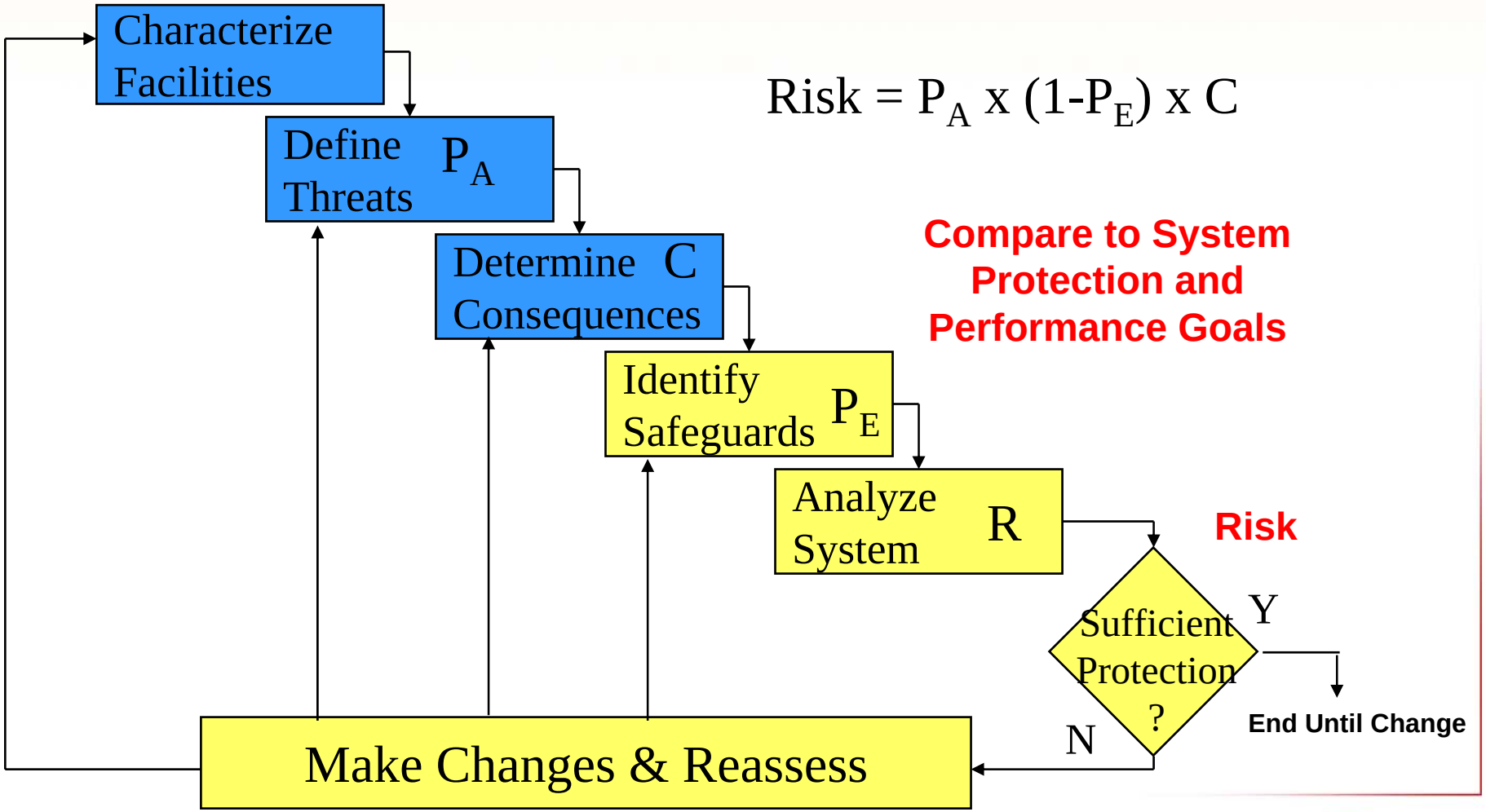

$$\text{Risk} = P_A \times (1-P_E) \times C$$

Compare to System Protection and Performance Goals

Risk

Sandia National Laboratories