NGNP and Hydrogen Production Preconceptual Design Report

SECTION 1: INTRODUCTION

Revision 0

APPROVALS

Function	Printed Name and Signature	Date
Author	Sten A. Caspersson Westinghouse Electric Company, LLC	May 22, 2007
Reviewer	Stanley E. Ritterbusch Westinghouse Electric Company, LLC	May 22, 2007
Approval	Edward J. Brabazon Shaw Environmental & Infrastructure, Inc.	May 22, 2007

Westinghouse Electric Company LLC
Nuclear Power Plants
Post Office Box 355
Pittsburgh, PA 15230-0355

©2007 Westinghouse Electric Company LLC
All Rights Reserved

LIST OF CONTRIBUTORS

Name and Organization	Date
Andrew Kadak Kadak Associates	May 2007
Jan van Ravenswaay M-Tech Industrial	May 2007
Michael Correia Pebble Bed Modular Reactor (Pty) Ltd	May 2007
Charles Bolthrunis Shaw Energy & Chemicals, Inc.	May 2007
Reiner Kuhr Shaw Stone & Webster Management Consultants, Inc.	May 2007
Peter Wells Shaw Environmental & Infrastructure, Inc.	May 2007
Dan Mears Technology Insights	May 2007
Fred Silady Technology Insights	May 2007
Valentina Shkolnik Westinghouse Electric Company, LLC	May 2007
Stanley E. Ritterbusch Westinghouse Electric Company, LLC	May 2007
Sten A. Caspersson Westinghouse Electric Company, LLC	May 2007

BACKGROUND INTELLECTUAL PROPERTY

Section	Title	Description
NONE		NONE

REVISION HISTORY

RECORD OF CHANGES

Revision No.	Revision Made by	Description	Date
0	Sten A. Caspersson Westinghouse Electric Company, LLC	Initial Issue	May 22, 2007

DOCUMENT TRACEABILITY

Created to support the following Document(s)	Document Number	Revision
NGNP and Hydrogen Production Preconceptual Design Report	NGNP-01-RPT-001	0

TABLE OF CONTENTS

LIST OF TABLES **1-5**
LIST OF FIGURES **1-5**
1 INTRODUCTION **1-6**
1.1 NGNP BACKGROUND **1-6**
1.2 BASIS FOR PRECONCEPTUAL DESIGN **1-9**
1.3 APPROACH **1-11**
1.4 KEY ASSUMPTIONS **1-15**
1.5 SPECIAL STUDIES SCOPE **1-16**
1.6 PCDR SCOPE AND ROADMAP **1-17**
1.7 RISKS AND APPROACH TO MITIGATION **1-21**
1.8 BENEFITS OF A PBMR NGNP **1-25**
1.9 PATH FORWARD **1-26**
1.9.1 PATH FORWARD PRIORITIES **1-26**
1.9.2 FUTURE STUDIES FOR THE START OF CONCEPTUAL DESIGN **1-26**
REFERENCES **1-34**
APPENDICES **1-35**
APPENDIX 1A FINAL DESIGN REVIEW PRESENTATION TO BEA - BACKGROUND AND OVERVIEW **1-35**
APPENDIX 1B FINAL DESIGN REVIEW PRESENTATION TO BEA - SUMMARY OF SPECIAL STUDIES **1-35**

LIST OF TABLES

Table 1.6-1: NGNP and Hydrogen Production Preconceptual Design Report 1-19
Table 1.6-2: Contents for Typical System or Plant Level Section 1-20
Table 1.7-1: Top Level Risks and Approach to Mitigation 1-21

LIST OF FIGURES

Figure 1.3-1: Rendering of PBMR DPP – National Strategic Project in South Africa 1-12
Figure 1.3-2: Cutaway of Main Power System for PBMR DPP..... 1-12
Figure 1.3-3: PBMR DPP Building Cutaway 1-13
Figure 1.3-4: PBMR DPP Long-Lead Components in Manufacturing 1-13
Figure 1.6-1: Requirements Flow Down to Preconceptual Design Development (PCDR Sections Identified) 1-18

1 INTRODUCTION

1.1 NGNP BACKGROUND

Over the past decade, the US has cooperated with other countries in the development of advanced nuclear energy systems that are envisioned to follow the Advanced Light Water Reactor (ALWR) systems that are now leading the resurgence of nuclear power. These advanced non-ALWR systems have been coined "Generation IV" (Gen IV) concepts. An international forum of these countries and a framework for cooperation have been established – the Generation IV International Forum (GIF).

The GIF model envisions that individual countries will take the lead for developing and demonstrating Gen IV nuclear systems in which they have particular interests, and that other countries will provide support through implementing agreements. The first of such implementing agreements have been recently signed. Early in the process, the US took the lead for developing the High Temperature Gas-Cooled Reactor (HTGR) – also referred to as the Very High Temperature Reactor (VHTR) within the GIF forum.

The HTGR technology offers enhanced safety features based on inherent material properties and passive design features, plus improved reliability, proliferation resistance, security and waste management capabilities. Further, the HTGR is evaluated to be competitive for a broad range of applications, including small-to-medium high efficiency power generation that is well suited for dry cooling, cogeneration and water desalination, plus unique high temperature process heat applications such as bulk hydrogen production. High pressure steam, well beyond the temperatures available with water reactor systems, can also be provided to displace natural gas for enhanced oil recovery and tar sands production - all without greenhouse gas emissions. Accordingly, HTGR plants can promote the utilization of indigenous coal and uranium resources and extend domestic oil and gas resources, thereby reducing dependence and costs associated with imported oil and natural gas.

Within the US, the Department of Energy (DOE) has focused the development of the HTGR technology through the Next Generation Nuclear Plant (NGNP) Demonstration Project which is the dominant part of the US Gen IV Program. From the start, the NGNP Project was centered at the Idaho National Laboratory (INL) and, initially, the goals were set for at least 1000ºC core outlet temperatures to drive Brayton cycle gas turbines and/or water splitting processes for the production of hydrogen.

Relatedly, in the 2003 State of the Union Address, President Bush launched a new National Hydrogen Fuel Initiative to provide domestically produced, clean-burning hydrogen to the transportation sector as an alternative to imported oil.

The NGNP Project was subjected to a critical review by a group of experts known as the Independent Technology Review Group (ITRG) over the period November 2003 through April 2004. The objective was to provide a critical review of the proposed NGNP Project and to

identify areas of R&D that needed attention. In the report, the ITRG observations and recommendations focused on overall design features and important technology uncertainties. A key recommendation was to reduce the core outlet temperature to the range of 900 to 950ºC and, hence, reduce the technology uncertainties to achieve a more timely deployment plan.

Energy Policy Act of 2005

In July of 2005, Congress passed the Energy Policy Act of 2005, which was signed into law by President Bush in August of 2005. Under Section 641, the Act states, "The Secretary shall establish a project to be known as the Next Generation Nuclear Plant Project." Guidelines for the NGNP Project designate that it shall be sited at INL and shall provide the capability for hydrogen production and/or electricity generation, using advanced technologies based on Generation IV concepts. INL was identified as the lead National Laboratory and directed to organize a consortium of industrial partners that would participate in the development of the NGNP and share in its cost, consistent with their roles in the Project. Major project elements were identified, including high-temperature hydrogen production, energy conversion technology, nuclear fuel, and materials, plus design of the reactor and the other elements of the plant.

Two phases were identified in the Act for the NGNP Project. The objectives identified for the first phase were:

- Select the technology
- Carry out research
- Determine whether it is appropriate to combine electricity generation and hydrogen production in a single demonstration plant
- Conduct initial demonstration plant design

During the second phase, a final design will be selected through a competitive process and the plant will be constructed, licensed and operated.

The Act calls for the maximum technical interchange and transfer of technologies and ideas into the Project, including the nuclear power industry, the chemical processing industry and relevant international efforts. With regard to the latter, the Act directs that the Secretary shall seek international cooperation, participation and financial contribution for the Project. For example, INL may contract for assistance from specialists or facilities from member countries of the GIF or other countries as deemed cost effective.

With regard to licensing, the NRC shall have such authority and, by August 2008, the Secretary and the Chairman of the NRC shall jointly submit to Congress a licensing strategy for the Project which will include:

- A description of ways in which current requirements relating to LWRs need to be adapted for the specific nuclear technology of the Project

- A description of the analytical tools that the NRC will have to develop to independently verify design and performance characteristics of components, equipment, systems or structures associated with the Project
- Other R&D activities that may be required by the NRC in order to review a license application for the Project
- An estimate of the budgetary requirements associated with the licensing strategy

The Secretary shall seek the active participation of the NRC throughout the duration of the Project.

With regard to funding, the Act authorizes $1.25 B for the period of fiscal years 2006 through 2015, and such sums as are necessary for each of fiscal years 2016 through 2021.

Overall Project Objectives

As presented in the Energy Policy Act of 2005, there is a national strategic need to foster further reliance on safe, clean, economical nuclear energy. The combination of these strategic objectives and the objectives of the National Hydrogen Fuel Initiative are uniquely supported with the NGNP Project. More broadly, the Project will enable the expanded use of nuclear energy as a greenhouse gas-free option for a broad range of process heat applications, including the production of hydrogen, thereby supporting DOE's broad strategic objectives for a diverse supply of clean energy options.

Accordingly, the primary objectives of the NGNP are to develop and demonstrate design, performance, operational, licensing and economic viability of HTGR and leading process heat technologies and, thereby, to support timely commercialization. Key near-term tradeoffs address:

- Balancing performance objectives, development risk and schedule for commercialization
- Assessing alternatives in design concepts to minimize development risks
- Establishing a reference commercial configuration for NGNP development and licensing

To realize such, the Project must demonstrate the commercial potential of the HTGR and the related technologies, establish the commercial vendor/owner/user infrastructure, and support the timely Design Certification by the NRC such that successful commercialization is assured. Toward that end, a public/private partnership is being formed to focus the development and deployment of the NGNP. The partners are DOE and an evolving NGNP Alliance of end-users, vendors and other private stakeholders. A cost/risk sharing model between the DOE and industry will assure a new commercialization phase for nuclear energy for production of process heat and bulk hydrogen - without carbon emissions.

All acronyms are defined in PCDR Appendix A.

1.2 BASIS FOR PRECONCEPTUAL DESIGN

In July 2006, DOE/INL issued a Request for Proposal (RFP) for Preconceptual Design and Engineering Services for the NGNP Project. The RFP was the culmination of planning and preparation conducted by the INL management team to establish high-level functions and requirements for the Project and a preliminary Project Management Plan.

Consistent with Energy Policy Act requirements for the first phase of the NGNP Project, the following key objectives were specified for the preconceptual design:

- Assist in focusing the technical scope and priorities for research and development activities for the NGNP.
- Provide a basis for subsequent development of the technical and functional specifications for the facilities for the NGNP.

The Statement of Work (SOW) specified in the RFP provided for an initial series of "Special Studies" that would address fundamental issues and tradeoffs. The following were specifically noted:

- Reactor Type (Pebble/Prism)
- Power Level and Key Operating Parameters
- Process Heat Transfer and Transport
- Power Conversion Concept
- Licensing Strategy
- Hydrogen Production

Based on the results of the Special Studies, a Preconceptual Design was to be developed to establish the basic geometry, layout and operating parameters of a single module NGNP demonstration plant that represents the optimal basis for serving as a "commercial scale prototype reactor" for electrical power generation, optimal hydrogen production and other industry applications of high-temperature process heat. The resulting design was to be documented in a Preconceptual Design Report (PCDR) that was outlined in the RFP.

Initial plant-level assessments of the resulting Preconceptual Design were specified, such as availability, maintainability, etc. Assessments of complexity and risk were also identified for inclusion.

A further emphasis of the SOW was the identification of R&D requirements and the associated schedule and cost requirements for the corresponding R&D program. A licensing assessment was identified to consider options for licensing a first-of-a-kind Generation IV advanced reactor in the U.S.

Based on the above, a schedule was to be developed for the design, construction, licensing and initial operation of the NGNP, plus the supporting R&D activities. Cost estimating requirements included design, licensing, R&D, equipment, construction, startup and operating costs. The cost estimating activity was also to include a lifecycle analysis of the economic viability of corresponding commercial plants.

Finally, the SOW requested inputs supporting the definition of follow-on development phases. Of particular note in this regard were:

- Proposed scope, schedule and cost for Conceptual Design
- Initial definition of the supporting R&D program, including schedule and cost.

1.3 APPROACH

In response to the RFP, three competing vendor teams submitted proposals, which have resulted subsequently in three contracts with INL for preconceptual design and engineering services for the NGNP Project. The first and primary contract was awarded to the Westinghouse NGNP Team on September 29, 2006. This Team builds upon the Westinghouse equity position with the Pebble Bed Modular Reactor (Pty) Ltd. that is underway with the deployment of the Pebble Bed Modular Reactor (PBMR) version of the HTGR concept in South Africa. This report and a companion Special Studies Report are the resultant products from this initial contract with the Westinghouse NGNP Team.

In addition to Westinghouse, the Team consists of Pebble Bed Modular Reactor (Pty) Ltd. and M-Tech Industrial (Pty) Ltd., both of South Africa; The Shaw Group (Shaw); Technology Insights; Air Products and Chemicals, Inc.; Nuclear Fuel Services, and Kadak Associates. The Team members have substantial experience and expertise in all of the areas to execute not only the preconceptual engineering services for the NGNP, but also to serve as the core Team to implement the Project through to detailed design, licensing, construction, startup and operations – with the commitment to follow-on commercialization.

PBMR Baseline for NGNP Success

The proposed PBMR-based NGNP builds upon the substantial and ongoing design, technology and licensing development plus related facility investments to build a PBMR Demonstration Power Plant (DPP) in South Africa – designated a National Strategic Project by the South African Government. The PBMR DPP is a 400 MWt / 165 MWe all-electric plant that utilizes the advanced Brayton power cycle. To date, over $500 million has been invested in the design, technology and related fuel and test facilities to advance the PBMR DPP. Approximately 700 full-time equivalent staff are currently engaged in South Africa and approximately 1200 people total are working on the PBMR DPP Project worldwide.

Long-lead component manufacturing is underway, start of construction is scheduled for early 2009 and commercial operation in 2014. Figure 1.3-1 through Figure 1.3-4 highlight the design concept, major components in manufacturing and the related fuel and test facilities. Note that the PBMR fuel manufacturing facility will be able to supply the initial core and early reloads for the NGNP and hence eliminate otherwise major costs and risks to the NGNP Project. The fuel supply strategy is elaborated in PCDR Section 5. Likewise the PBMR test facilities are elaborated in Section 16.

Figure 1.3-1: Rendering of PBMR DPP – National Strategic Project in South Africa

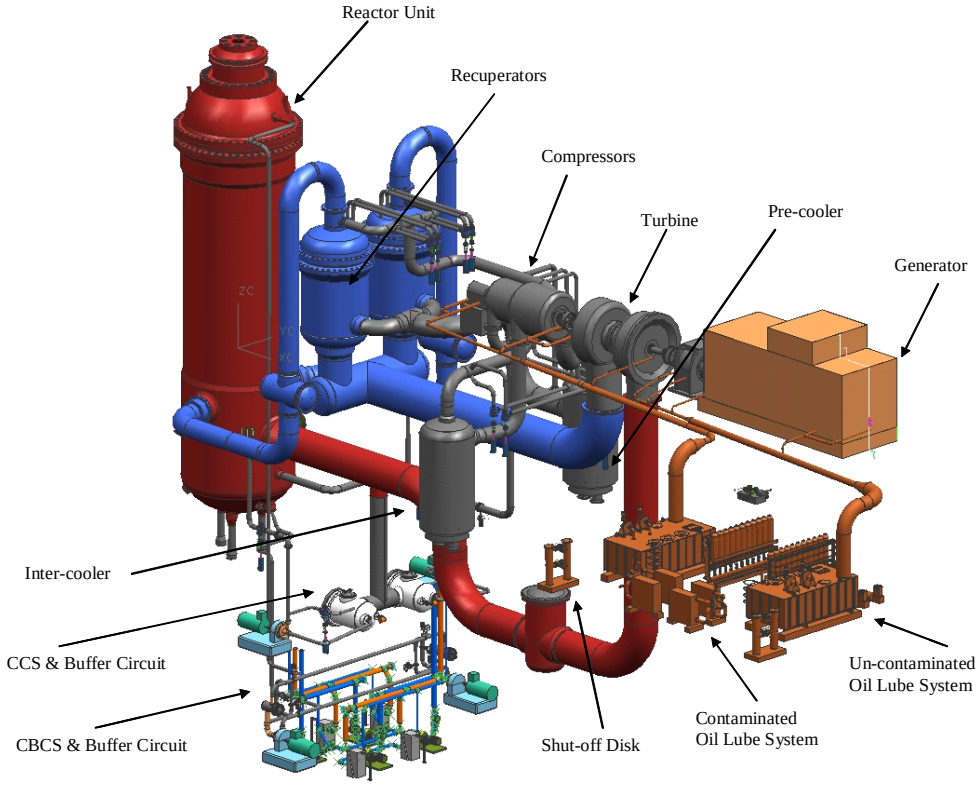

Figure 1.3-2: Cutaway of Main Power System for PBMR DPP

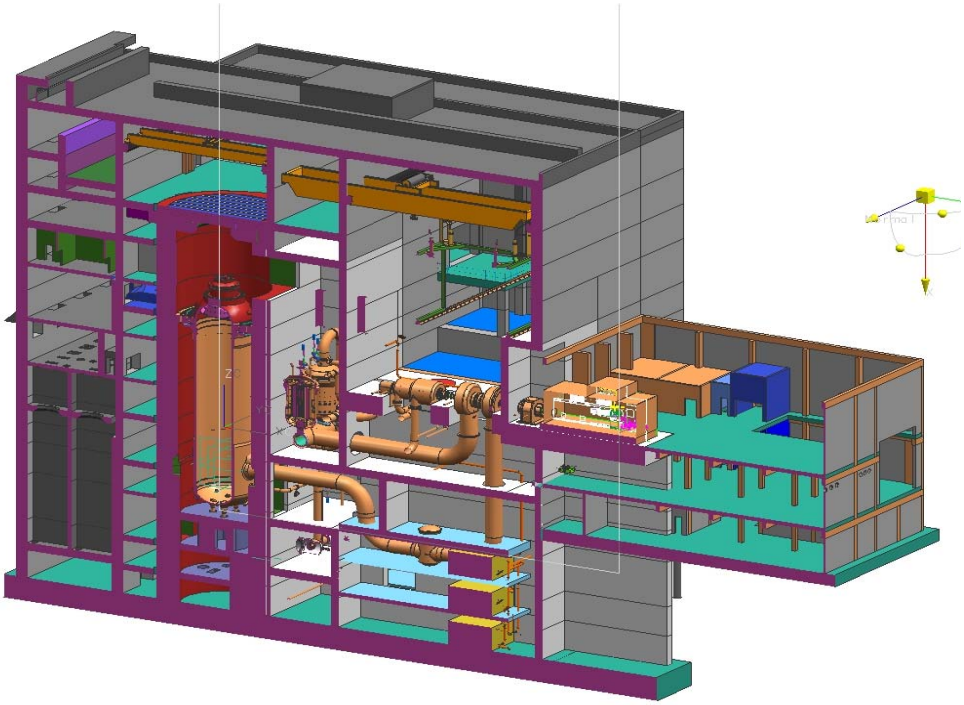

Figure 1.3-3: PBMR DPP Building Cutaway

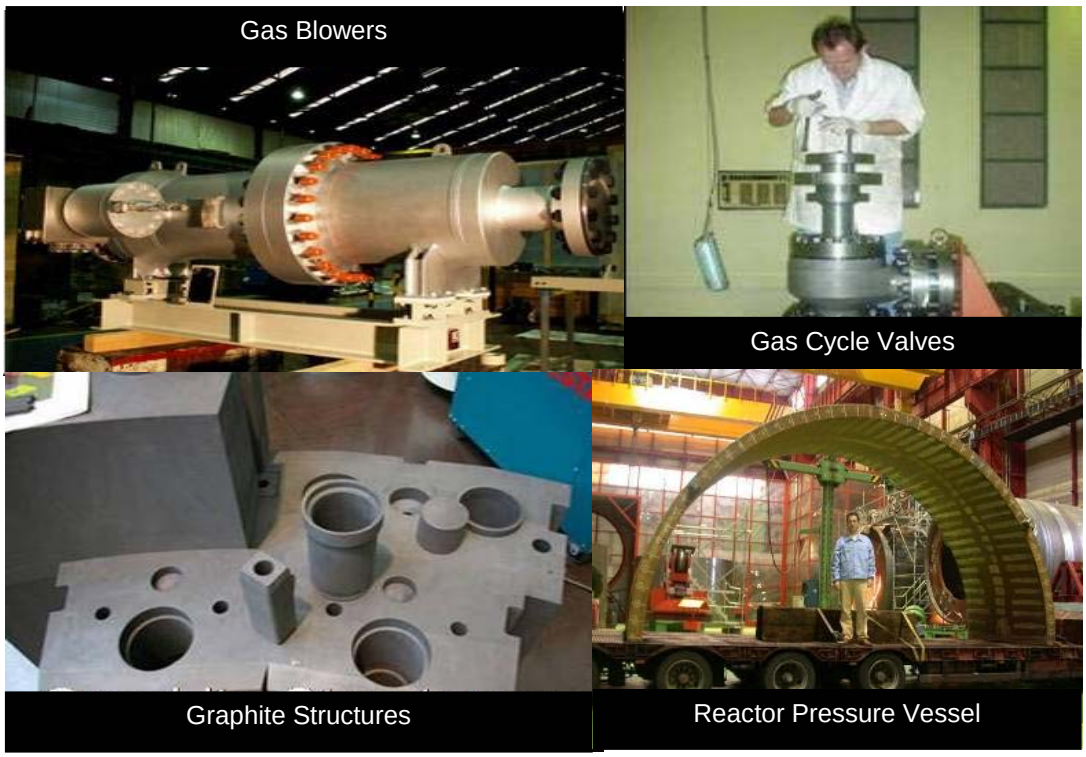

Figure 1.3-4: PBMR DPP Long-Lead Components in Manufacturing

Eskom, the State utility in South Africa, selected the PBMR technology based on the proven experience with pebble bed reactors in Germany, particularly the superior pebble bed-based fuel performance experience, plus the baseline of common HTGR technology developed in the US, Japan and elsewhere. Eskom has signed a letter-of-intent to deploy an initial capacity of follow-on, multi-module commercial PBMR power plants representing a backlog of at least 24 modules.

As elaborated in the related sections of this report, the proposed PBMR-based NGNP concept adapts the PBMR DPP reactor and fuel designs, with minimal incremental development and testing costs. Additionally, the systems, materials and component designs used in the PBMR DPP have been chosen based on proven operating experience from prior gas-cooled reactors and light water reactors. This approach reduces the technical and commercial risks to the PBMR DPP project, and is directly translatable to benefit the NGNP Project. This knowledge and experience has been factored into the preconceptual design for the PBMR based NGNP. On the other hand, advanced materials and component R&D programs required for the PBMR NGNP have been addressed herein.

Another key PBMR baseline to build upon for NGNP success is the ongoing PBMR Design Certification Pre-Application Program with the NRC, as elaborated in the Licensing section. In addition, a US-based PBMR team has been developing preconceptual designs and performing economic evaluations of various process heat applications with the PBMR technology. These applications have been developed with potential end-users as a basis for moving forward with further project feasibility assessments and serve as potential commercial follow-on projects or fall-back options to the NGNP.

Building upon the PBMR DPP reactor and fuel experience along with the US base of vendor/supplier Team members plus the Pre-application Program and other project initiatives offers a compelling opportunity for the US, South Africa and others to deploy a PBMR-based NGNP for the least costs and risks, plus an assured commercial outcome. The Westinghouse NGNP Team is committed to that outcome.

1.4 KEY ASSUMPTIONS

Each of the PCDR design and assessment sections lists the related assumptions as a means of tracking and future reference. Key generic assumptions that apply to the institutional and programmatic arrangements for the NGNP Project are consolidated below as part of this Introduction:

- A NGNP Alliance is established to consolidate the User stakeholder interests and support.
- A Public (DOE led) / Private (Alliance led) Partnership (PPP) entity is the Project Manager and Applicant.
- DOE owns the NGNP plant and receives offsetting revenues from the sale of power, hydrogen and oxygen.
- INL provides staff support to the PPP, including the coordination of US Laboratory based R&D.
- NRC licenses the plant and conducts selected R&D needed to independently verify the safety performance of the design.
- A PPP selected vendor team provides the full scope of plant design, delivery and startup, plus fuel supply and services.
- The vendor team concurrently advances follow-on commercial projects with User clients.
- A PPP selected commercial based nuclear operator operates the plant.
- The NGNP will serve a long-term mission to demonstrate multiple advanced hydrogen production technologies, plus serve as a test bed for advanced fuels, materials, components, etc.

Likewise, key assumptions that are PBMR-specific for the NGNP Project are consolidated below:

- The Reactor Facility is the first unit outside South Africa and has full advantage of the PBMR DPP experience. In particular, the Reactor and Fuel related design and R&D are incremental to the PBMR DPP effort.
- The Heat Transport System, including the IHX and helium circulators, is the first-of-a-kind full scale demonstration unit.
- The Hydrogen Production Facility is the first-of-a-kind commercial size train unit.
- The initial core and reload fuel for the first 6 years is provided by Pebble Bed Modular Reactor (Pty) Ltd.'s pilot fuel plant in South Africa.
- Reload fuel thereafter will be provided by a commercial fuel plant in the US established by PBMR (Pty) Ltd., Westinghouse and NFS, as the PBMR market expands in the US.

1.5 SPECIAL STUDIES SCOPE

The documentation of the NGNP Preconceptual Design performed by the Westinghouse NGNP Team consists of the Special Study Reports, this Preconceptual Design Report (PCDR), and a stand-alone version of the same Executive Summary in the PCDR.

The first segment of the NGNP preconceptual design effort centered on six Special Studies:

- A comparative evaluation of the pebble and prismatic core – based on high temperature process heat delivery capability,
- A power level trade study to select the PBMR-PHP core output rating,
- A heat transport trade study to select the configuration for coupling the reactor system with the preferred hydrogen production system and the preferred power conversion system,
- A power conversion system study,
- A licensing and permitting strategy study, and
- A hydrogen demonstration sizing study that also evaluated the by-products and effluents.

It is noted that the heat transport special study combined the prescribed "20.3 High Temperature Process Heat, Transfer and Transport Study" with the "20.5 Primary and Secondary Cycle Concept Study" in the SOW. Per agreement with INL, the logic was that it was inefficient and very difficult to separate the topics of primary and secondary cycles from the special study on transfer of the nuclear reactor heat to the hydrogen production and electricity generation systems.

The Special Study results, as reported in a companion document, formed the starting point for the rest of the preconceptual design. In brief, the studies selected a pebble annular core at 500 MWt coupled in an indirect cycle heat transport configuration to a 50 MWt commercially-sized train of the hydrogen production process with a bottoming Rankine cycle for electricity, but rated at full reactor power output for the benefit of full power utilization during planned or unplanned outages of the hydrogen production facility. A Hybrid Sulfur (HyS) hydrogen production process was selected as a reference for preconceptual design by the Westinghouse NGNP Team in parallel to the special studies; however, the Team remains open if a more attractive process evolves from the ongoing technology development activities. The resultant commercial PBMR HyS Process Heat Plant (PBMR H2 PHP) is described in Section 2 as a key underlying basis for the PBMR NGNP design requirements.

The second segment of the preconceptual design effort is the subject of this PCDR.

1.6 PCDR SCOPE AND ROADMAP

As the NGNP is the single module demonstration for the commercial PBMR H2 PHP that is comprised of one or more modules, the commercial plant design concept, the profiles of the targeted users, and the user perspective on market incentives, needs, opportunities and development strategy for the commercial plant are first addressed in Section 2, as they serve as the underlying bases for the user requirements for the NGNP.

The user requirements along with the regulatory and mission-specific requirements are then elaborated. Each of these traceable requirements will flow down to one or more of the 13 standard categories of design requirements in DOE's hierarchy of design control or to the overall project management control documents. These requirements are drawn from past and ongoing efforts by user groups, individual user-driven project development (including the PBMR DPP), the regulators, Project mission-specific requirements developed by DOE/INL personnel, plus initial NGNP-based special studies and leading analyses conducted by the Westinghouse NGNP Team.

The sources of these top level requirements for the NGNP Project and the relationship to the Plant Design Requirements plus the overall relationships of the other sections of the PCDR are illustrated in Figure 1.6-1.

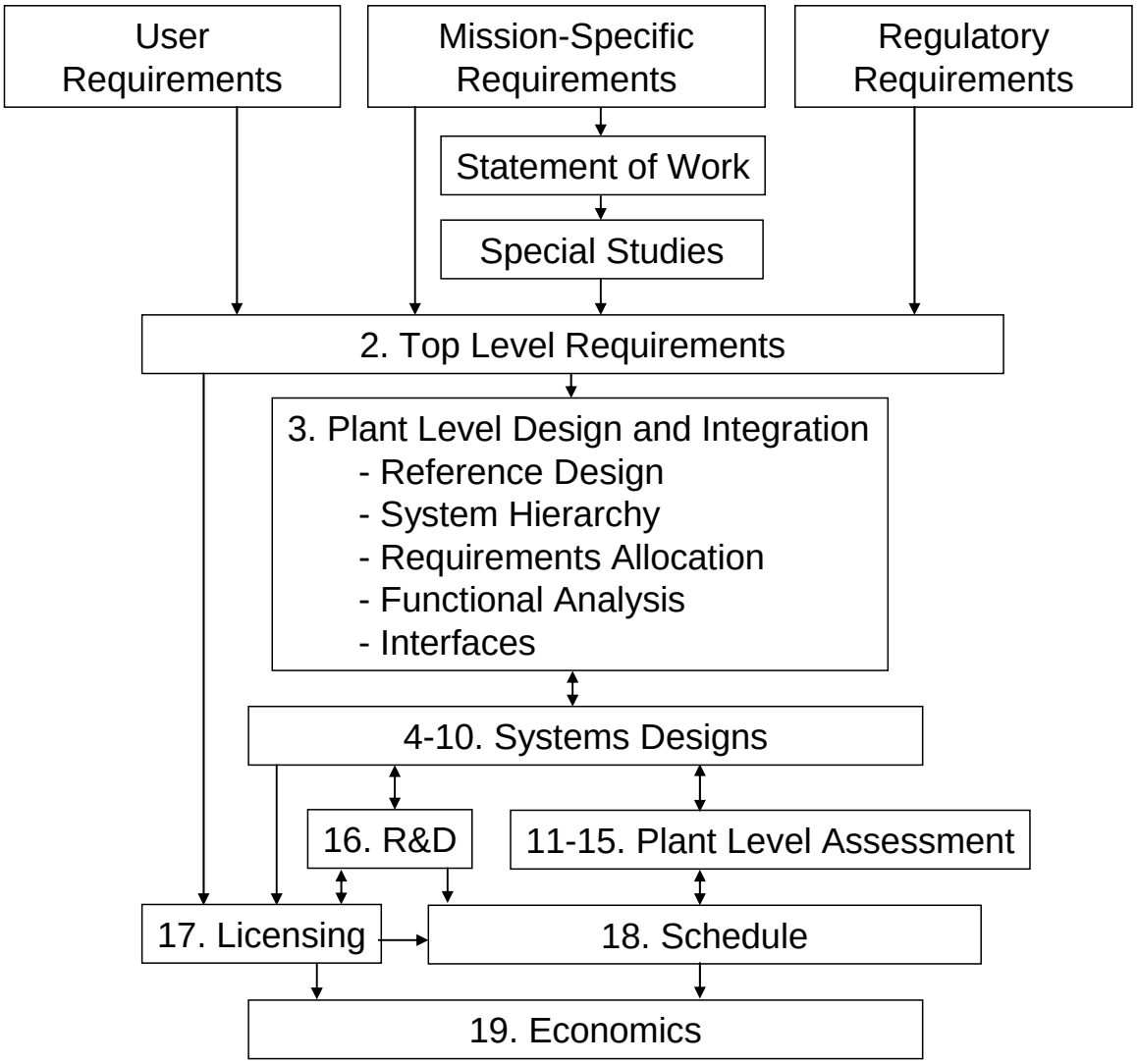

Figure 1.6-1: Requirements Flow Down to Preconceptual Design Development (PCDR Sections Identified)

As depicted in Figure 1.6-1, after the Top Level Requirements (Section 2), the framework for Functional Analyses and Plant Level Integration is established in Section 3. The design for the major Systems plus the Fuel follow (Sections 4, 5, 6, 7, 8, 9 and 10), followed by the Plant Level Design and Assessments (Sections 11, 12, 13, 14 and 15), and finally the R&D, Licensing and Permitting, Schedule and Economic Assessment topical sections (Sections 16, 17, 18 and 19). As noted, the front-end Special Studies that served to establish key design features and parameters as well as programmatic content were documented separately. Where formal calculations are required to support key design parameters for the preconceptual design, they have been prepared in accordance with Team member company procedures. They have been performed, checked, and approved and are on file.

Table 1.6-1 provides section titles for tracking the above with a summary level roadmap of the PCDR.

Table 1.6-1: NGNP and Hydrogen Production Preconceptual Design Report

Section Number	Section Title
	EXECUTIVE SUMMARY
1	INTRODUCTION
2	TOP LEVEL REQUIREMENTS
3	PLANT LEVEL DESIGN AND INTEGRATION
4	NUCLEAR HEAT SUPPLY SYSTEM
5	REACTOR FUEL
6	HEAT TRANSPORT SYSTEM
7	HYDROGEN PRODUCTION SYSTEM
8	POWER CONVERSION SYSTEM
9	BALANCE OF PLANT SYSTEMS
10	SITE, BUILDINGS AND STRUCTURES
11	OVERALL NGNP OPERATION
12	MAINTAINABILITY
13	AVAILABILITY
14	SAFETY
15	SAFEGUARDS AND SECURITY
16	TECHNOLOGY DEVELOPMENT
17	LICENSING AND PERMITTING
18	PROJECT SCHEDULE
19	ECONOMIC ASSESSMENTS
Appendix A	APPENDIX A. ACRONYMS
	SPECIAL STUDIES

All PCDR sections other than Sections 2 and 3 and the topical sections (16-19), have the outline structure that X.1 is a Summary Description, X.2 is the actual System or Plant Level Description, X.3 is Design Development Needs and X.4 is the Complexity, Risks and Future Studies subsection. For the actual "System" sections, the first breakdown for each system is System Functions and Requirements, followed by System Description, Major System Interfaces, and System Operation.

The contents of a typical System or Plant Level section in this PCDR are, therefore, as shown in Table 1.6-2.

Table 1.6-2: Contents for Typical System or Plant Level Section

LIST OF TABLES
LIST OF FIGURES
Section X Title
SUMMARY AND CONCLUSIONS
INTRODUCTION
Subsection X.1, SUMMARY DESCRIPTION
Subsection X.2, SYSTEM or PLANT LEVEL DESCRIPTION
- Subsection X.2.1, System Functions and Requirements
- Subsection X.2.2, System Description
- Subsection X.2.3, Major System Interfaces
- Subsection X.2.4, System Operation

Subsection X.3, DESIGN DEVELOPMENT NEEDS
Subsection X.4, COMPLEXITY, RISKS AND FUTURE STUDIES
- Subsection X.4.1, Complexity and Risks
- Subsection X.4.2, Future Studies

REFERENCES
LIST OF ASSUMPTIONS
APPENDICES
- APPENDIX A: TECHNICAL INFORMATION
- APPENDIX B: FINAL DESIGN REVIEW PRESENTATION TO BEA

The structures of the four topical sections are specialized for their specific subject. This overall structure is considered a good foundation to implement conceptual design as well as to advance and control the overall NGNP design development effort

It is noted that in the course of the 90% Design Review of the PCDR, Technology Readiness Levels for the major systems and components were requested by INL/BEA. This input will be provided under a separate, follow-on letter report.

1.7 RISKS AND APPROACH TO MITIGATION

Each of the PCDR design and assessment sections lists the related complexity and risks as a means of tracking alignment with the corresponding mitigation strategy that may warrant a R&D or programmatic priority. A summary of the top level risks follows per principal areas:

A. Licensing
B. Technology Development
C. Project Development
D. Project Experience
E. Adequate Resources
F. Commercial Infrastructure

For each of these principal areas, Table 1.7-1 identifies the risks, a summary of the basis for the risks, and the planned approach to mitigate the risks.

Table 1.7-1: Top Level Risks and Approach to Mitigation

	Risk Areas	Summary	Mitigation
A	**Licensing**		
1	NRC acceptance of NGNP licensing bases and strategy, plus R&D requirements for V&V and/or testing	NRC's acceptance of the PBMR Pre-application design certification content plus requirements for safety related V&V are TBD.	A quality NGNP Pre-application Program and V&V Program provide satisfactory resolution, plus confirmatory testing potential with the NGNP.
2	NRC resources and commitment to support Project schedule	NRC's resources may be inadequate to support the target NGNP schedule due to low commitment priority.	Priority to be assigned in the near-term by Users/Alliance, DOE, Congress, and as soon as possible by Applicant(s). Schedule acceptance by the NRC as soon as possible with appropriate cost and schedule contingency.
3	PBMR DPP licensing precedents and/or issues negatively impact the acceptance of NGNP licensing bases and strategy.	The PBMR DPP licensing approach and delays could create licensing issues with the NRC.	Continued PBMR priority to minimize such or at least reconcile any differences that preclude problematic precedent setting elsewhere.
B	**Technology Development**		
4	IHX development uncertainty	IHX materials, performance, lifetime,	Prioritize design, multi-materials qualification, V&V program and

	Risk Areas	Summary	Mitigation
		nuclear codification and costs are uncertain.	supplier development starting in FY08. Appropriate cost and schedule contingency included.
5	HyS development uncertainty	HyS materials, performance, lifetime and costs for decomposer and electrolyzers are uncertain.	Prioritize design, multi-materials qualification, V&V program and supplier development in FY08. Appropriate cost and schedule contingency included. Stay positioned to adopt alternative hydrogen production technology if HyS technology proves impractical or too costly as R&D proceeds.
6	Fuel performance uncertainty	Qualification of Pilot Fuel Plant reference UO_2 fuel for 500 MWt and 950C core outlet temperature is pending TBD fuel irradiation program for the NGNP.	Prioritize fuel qualification and source term programs in SA and the US. Contingency plans for improved fuel and/or reduced duty.
C	**Project Development**		
7	Cost of H_2 product for commercial PBMR plants versus incumbents and contemporary alternatives is uncertain.	Evaluated mature PBMR H2 PHP plant competitiveness is uncertain due to design and performance uncertainties associated with processes.	Continue priority on critical design and cost development and management plus economic analyses with candidate user interactions for early indicators of attractiveness.
8	NGNP Project costs and schedule exceed stakeholder acceptance.	Potential for DOE/INL overhead costs, NRC R&D costs and schedule extensions, extended multiple vendor team costs and required R&D costs being excessive.	Decisive Project management that focuses on critical path issues for Project implementation. Committed, capable Vendor/Operator/User team with cost/risk offsets and sharing. International cooperation via GIF focuses on related technologies.
9	Major increases in Project costs from current estimates	Current estimating process is limited by the extent the Project can be defined, and by limited accuracy of estimating approaches applied during the preconceptual phase	High costs and risks for reactor and fuel development are covered by the PBMR DPP and based on current supplier quotations. Appropriate contingencies are included in overall Project costs per the experienced team.

	Risk Areas	Summary	Mitigation
		of work.	
D	**Project Experience**		
10	Performance risk	The plant may have to operate at lower power, lower temperature, or suffer higher than expected outages.	Thorough systems analyses and appropriate margins will be applied to cover performance uncertainties.
11	Operating cost risk	Actual costs for operating, maintaining and repairing the plant may exceed current estimates.	Further work will be required to refine projected operating and maintenance costs, and the likely frequency and extent of periodic overhaul cycles. Current estimates are based on judgment and experience with similar projects.
12	Risk of shortened economic life	Equipment problems or failures may make it too difficult or expensive to provide repairs to complete the life of the NGNP project as forecast.	Thorough RAM and investment protection analyses will be applied. Critical components (e.g., IHX) will be designed for relative ease of replacement. Design of the PCS and the HPS will be based on current power and process industry practices where the plant design supports long-term and economical replacement of parts and repairs.
E	**Adequate Resources**		
13	Adequate, sustained DOE funding support is currently missing and subject to annual political priorities and decisions.	The political decision-making process to support a Project through completion is a major risk to other stakeholders with the possibility of their investment in R&D and Project development being lost.	Innovative multi-year phased commitments are needed, e.g., Technology Investment Agreements. Joint commitments are needed within the US government and any supporting governments, plus the vendor/ operator/user team along with broad based political support from the user Alliance, academia, R&D institutes, etc. Multiple follow-on projects are advanced as backup demo Project candidates.
14	Sufficient private sector support for Alliance and Public/Private Partnership cost/risk sharing arrangements	The Alliance/ Partnership concept builds on FutureGen precedents, with DOE ownership and INL siting, but is	HTGR community Working Group efforts are underway to develop the Alliance and Partnership concept in concert with Congressional/DOE budget support.

	Risk Areas	Summary	Mitigation
	are TBD.	challenging for gaining end-user support.	Multiple follow-on projects are advanced as backup demonstration Project candidates.
F	**Commercial Infrastructure**		
15	Early commercial plant ownership and cost/risk sharing arrangements are TBD.	A likely merchant plant ownership for the first series of commercial plants and the roles of process heat users present major challenges	Government risk sharing arrangements per NP2010 precedents.

1.8 BENEFITS OF A PBMR NGNP

Traditionally, nuclear energy has been used for the production of bulk electricity using predominately LWR technology at a delivery temperature of about 300ºC. The deployment of ALWRs is underway which are ideally suited for large capacity additions of baseload power. The leading Generation IV nuclear technology is the HTGR which can provide high temperature, emission-free heat for industrial processes.

The NGNP Project will serve to demonstrate and commercialize the HTGR as the first Generation IV system. The PBMR offers a compelling opportunity for the NGNP Project. Its capability to deliver process heat at temperatures up to 900ºC with current reactor and fuel technology, plus the on-line refueling design, are key discriminating design features within the family of competing modular HTGRs. The PBMR technology also offers improved safety, reliability, proliferation resistance, security and waste management features. Further, the PBMR is evaluated to be competitive for a broad range of applications, particularly when displacing natural gas and taking credits for the elimination of CO_2 emissions. The NGNP Project will demonstrate such commercial potential of the PBMR and associated technologies plus support timely Design Certification and the related commercial infrastructure.

The Westinghouse NGNP Team of world-class developers, suppliers and users has supported the development of a user-based NGNP Alliance and the concept of such an Alliance and DOE creating a public/private partnership to drive the NGNP development and deployment. This effort has been conducted in parallel with this initial cost-shared contract with DOE/INL to develop a NGNP preconceptual design, cost and schedule plus the related licensing strategy and R&D plan. The Westinghouse NGNP Team's design for the NGNP adapts the reactor system and fuel from the Brayton cycle-based PBMR DPP which is nearing the start of construction in South Africa. Value transfer from the PBMR DPP Project and related fuel manufacturing and test facilities plus the ongoing PBMR pre-application program with the NRC and PHP project initiatives assure a new commercialization phase for nuclear energy for production of process heat and bulk hydrogen without carbon emissions – at the lowest costs and risks for the US taxpayers.

1.9 PATH FORWARD

Each of the PCDR design and assessment sections lists the related future studies which serve as priority scope candidates for the next phase of design development. The overall conceptual design scope and schedule is described in Section 18, and path forward priorities are noted below. Recommended future studies are also summarized as they will likely lead path forward activities.

1.9.1 PATH FORWARD PRIORITIES

The following recommendations concerning the NGNP Project Schedule are made in order to address the risks and reduce the uncertainty in meeting the project completion date at the end of fiscal year 2018:

- Begin implementation of the future studies (see below) and conceptual design, as soon as possible.
- Start NGNP pre-application interactions with the NRC as soon as possible to secure the licensing strategy basis for the schedule.
- Immediately implement the recommended technology development programs, particularly in the areas of the IHX and limiting hydrogen production processes.
- Begin developing the acquisition strategies and long lead procurement programs for the major equipment identified in the schedule.
- Develop and implement risk mitigation strategies.

1.9.2 FUTURE STUDIES FOR THE START OF CONCEPTUAL DESIGN

This section summarizes the major future studies recommended to be performed as part of the conceptual design. Section 1.9.2.1 includes most of the future studies contained in the individual sections of the PCDR. Section 1.9.2.2 addresses additional major future studies identified as a result of dialog during the PCDR 90% Design Review Meeting.

1.9.2.1 Major Future Studies Contained in Individual PCDR Sections

Consolidate Reference Top Level Requirements

A front-end, thorough review and comment resolution process with INL/BEA and other stakeholders on the top level requirements proposed for the reference commercial version of the PBMR NGNP is needed to assure that the conceptual design effort is well grounded. Additionally, the NGNP-specific requirements (e.g., site and demonstration related) need to be compared with those needed for a commercial plant for a generic site to assure that any differences are reconciled.

Applications Study

The portfolio of leading applications accessible with the reference NHSS design is needed for the advancement of the NGNP Alliance as well as for the development of additional and/or enveloping top level requirements for the NGNP. The Westinghouse Team will build upon past and ongoing internal work on such applications to effect a significant cost-sharing contribution to the overall effort. To date, the following applications have been identified for this task.

- Oil Sands (OS) Applications
- Enhanced Oil Recovery (EOR) Applications
- Steam Methane Reforming (SMR) Applications
- High Temperature Steam Electrolysis (HTSE) Applications
- Coal-to-Gas (CTG) and Coal-to-Liquids (CTL) Applications

For each family of applications, the following scope topics will be addressed:

- Describe the application and market conditions in order to frame the basic market opportunity for HTGR process heat in this market.
- Develop a reference summary level flowsheet and scoping economic assessment for coupling a PBMR-PHP for the applications.
- Develop a reference scoping economic assessment for the conventional fossil fired production systems envisioned as the comparative bases.
- Develop economic comparisons of the above and identify key drivers such as capital costs, price of natural gas and cost of CO_2 sequestration (or related tax).
- Characterize the environmental, energy security or other benefits and issues derived from the application of PBMR process heat in this application.
- Based on the economic potential above, develop one or more strategy options for demonstrating such applications as part of the NGNP Project, including cooperative initiatives with other stakeholders.

Building upon the results of the Preconceptual Design Report and the results from the above subtasks, this study will develop the likely integrated demonstration strategy for one or more of the applications, including the relative pros and cons. This study will also provide recommendations and rationale for overall NGNP Project and Alliance development.

Based on the results of the above, the top level requirements will be revised to envelope the mutually agreed-upon applications.

Initial Licensing Basis Events

This study extends the preconceptual design safety effort by determining an initial set of Licensing Basis Events (Anticipated Operational Occurrences, Design Basis Events and Accidents, and Beyond Design Basis Events) for use during conceptual design. This initial set of LBEs for the NGNP demonstration will be based on prior work and form the starting point for the iterative design – safety analyses process.

NHSS Configuration

This study revisits and more thoroughly evaluates the trade offs with the Reactor and HTS design selections of the preconceptual design. The scope of this NHSS study includes:

- Reactor inlet return piping location,
- Concentric versus separate hot and cold piping,
- Core Conditioning System (for forced decay heat removal) location, size, redundancy, and independence,
- Number of IHXs and/or circulators,
- Arrangement and replacement of the very high temperature section of the IHX,
- Location of the secondary circulator(s),
- Safety functions of the Heat Transport System (HTS) and their allocation to Primary HTS/Secondary HTS Systems, Structures and Components, and
- Need for tritium and other cleanup systems for the SHTS.

Plant Layout

This study extends the preconceptual design layout effort in the following areas:

- Reactor embedment – Identify all applicable requirements and regulatory sources pertaining to the protection of the Nuclear Heat Supply System against natural and man-made phenomena. This study will evaluate and assess alternatives for partially burying or not burying the NHSB.
- Separation distance vs. building design robustness vs. physical barriers – This study will evaluate cost/safety/licensing/security tradeoffs for NHSS building, HPS/decomposer component/building and PCS/SG component/building.
- Shared NHSS building walls and systems - Evaluate and assess alternatives for the degree of shared NHSS building walls and support systems.
- Control system design and layout - Evaluate and assess alternatives for the integrated vs. distributed control systems and their locations.
- Geotechnical data - Evaluate the acceptability of the current geotechnical data for the INL site – This study will review and assess the validity and acceptability of available geotechnical data obtained in the NPR program and by others for the INL site. This

study will also determine the extent to which additional geotechnical investigations, including new borings and topographical surveys, are required to support foundation design for the PBMR NGNP site layout.

- Seismic Hazards Analysis data - Review and verify validity and applicability of existing Probabilistic Seismic Hazard Analysis data that have been assembled for other INL facilities. It is anticipated that the conclusion of this study would be that the design ground level response spectra developed for these other facilities is representative and bounding for application to the PBMR NGNP with respect to NRC regulatory standards. If this is the case, a site specific Probabilistic Seismic Hazard Analysis may not be required for the PBMR NGNP.

Hydrogen Process and Material Selections

This study will make a more detailed comparison of the HyS and HTSE technologies. This study will include a more detailed risk assessment of the HTSE process and compare the results with those for the HyS process. Additional process development for both HyS and HTSE will be carried out. The study will also pursue continued development of preferred hydrogen processes, design selections and materials, to prepare for a conceptual design that is both technically feasible and cost effective. In addition, this study will build upon the initial selections and findings in the PCDR and evaluate concept alternatives that may be more cost effective, evaluate the maximum temperature for the hydrogen process, perform a hazards analysis of decomposers, and expand studies on life cycle costs for alternate technologies**.**. Selection and validation of process concepts and materials of construction will take place during the conceptual design phase.

Value Engineering Study

This study involves performing a Value Engineering study within the first 6 months of the conceptual design work. Value Engineering is a systematic evaluation to find solutions which will improve system performance and/or reduce cost compared to the initial selections. The Value Engineering structured study would be at the facility or system level, or a combination, based on an initial screening process.

COLA Pre-application Strategy

This study is a follow-on to Licensing Special Study 20.6 and PCDR Section 17. It develops the plan for pre-application interactions with the NRC for the NGNP Combined License Application (COLA), building on the ongoing PBMR design certification pre-application interactions. The objectives, scope, cost, and schedule for the COLA pre-application interactions will be addressed, including the bases for the COLA schedule estimates. The generic white papers from the ongoing PBMR interactions will be supplemented with NGNP-specific topics that: 1) are necessary to obtain NRC feedback prior to the COLA and 2) are potentially critical path items, e.g., requiring long lead technology development. Candidate topics may include those related to the extension of the power rating to 500 MWt, the regulatory

treatment of the IHX Helium Pressure Boundary, and the proximity of process hazards to the Nuclear Heat Supply System.

Construction Modularization Study

This study will build upon the pre-conceptual design, and evaluate alternative construction techniques that could potentially improve the onsite construction schedule, reduce the cost estimate,, and reduce the risk in both areas. The study will evaluate design concepts that would facilitate construction modularization, including but not limited to altering the site arrangement and/or building arrangements to enhance constructability, selecting different materials of construction, such as replacing conventional concrete forming concepts, preassembly of rooms and/or buildings, and preassembly of bulk materials and/or subsystems.

Water and Waste Water System Optimization Trade Study

This study will optimize the approach to water and waste water usage, treatment, and disposal. This recommended study is based on the assumption that the NGNP will be a zero liquid discharge site and knowing that: (1) large amounts of water are required for make up and cooling of HPS, PCS, and BOP systems, and (2) treatment is required for process waste water discharge and blow-down from these systems.

Steam Generator Design Trade Study

This study will evaluate alternative approaches for the steam generator including more conventional designs (e.g., refractory lined, U tubes) compared to the once-through helical SG proposed in the preconceptual design. Single vs. multiple trains will be evaluated. The results of the study will establish a path forward for design development of the steam generator.

Rankine Cycle Trade Study

Further engineering studies are recommended for the conceptual design stage to optimize the Rankine Cycle configuration and performance. The study will assess costs and performance benefits of more efficient cycles with steam reheat vs. more simple and less costly, but less efficient systems. The study will proceed in conjunction with the steam generator design trade study discussed above.

Major Equipment Transportation Trade Study / Major Component Field Fabrication

Detailed studies of the: (1) transportation routes and size constraints for transport of large components or sub-components such as the reactor and steam generator and (2) potential modularization for major components are recommended early in the conceptual design phase. This latter study will assess schedule and cost advantages and disadvantages of final assembly of major items at or near the site. These studies will influence the design of access roads and a rail spur shown on the site plan and plot plan as well as plans for modification to other roads in the vicinity of the INL site.

1.9.2.2 Major future studies identified as a result of the 90% Design Review Meeting

The following is an overview of additional future studies identified as a result of the 90% Design Review Meeting between INL/BEA and the Westinghouse Team.

Stochastic Analysis of the Pebble Bed Reactor

Prepare a white paper on the treatment of stochastic analysis of the behavior of the pebble-bed reactor in the safety analyses and associated uncertainties.

Evaluation of the Control Room Location

Perform an evaluation of the cost savings associated with placing the control room outside of the vital area including the cost of construction and cost impact on day-to-day operations. This would include analyzing the safety considerations of the control room and of required operator actions, and the impact of the rest of the plant on the control room. The safety hazard protection of the control room would be included. This study would also include evaluating the use of digital control systems.

Licensing Aspects of Nuclear Heat Supply System Connection with Other Plant Facilities

The licensing of the NHSS facility independent of other facilities needs to be further developed. This study includes developing a model to determine whether there is a safety case that isolates the NHSS from the rest of the plant. This has been discussed, but needs to be documented to determine the extent of interactions, and how it would impact the plant layout to keep the NHSF separate from and the HPF, PCF and BOP from a licensing perspective.

PBMR Reactor Building Requirements, Functions and Features

Prepare a white paper on the requirements, functions, and design features of the PBMR reactor building. Clearly identify all requirements, including performance, costs, investment protection and safety. Perform an analysis of the safety considerations of the PBMR designed with a confinement versus an LWR-type containment. Identify benefits and adverse consequences of selecting an LWR-type containment. Consider the citadel concept of the DPP for either alternative.

Dust Control

Prepare a white paper on dust control for the NGNP NHSS. Determine whether it is necessary to test the IHX for dust blockage and release during accidents. Consider similarities and differences with the DPP and its approach to dust management.

Post-Irradiation Examination Facility

Perform preconceptual design work and assess the cost for adding a Post-Irradiation Examination (PIE) facility to NGNP. This study will be to perform PIE on core ceramics and similar materials, but not fuel elements. The pre-conceptual PIE facility design would include the shielding concepts and the facility description.

Evaluation of the NPR Site versus Other Sites on INL

Evaluate the benefits of using the NPR site versus other available site locations at INL. Consider existing geotechnical and seismic data and analysis, water table, location relative to road, railroad access and electrical transmission lines, topography and other relevant factors.

Simulation Modeling

Survey potential simulation modeling tools for the PBMR NGNP configuration and implement an integrated simulation tool required to perform transient analysis of an integrated plant.

Transient Analysis of NHSS, HTS, and PCS

Perform a transient analysis to identify and analyze transient cases that could effect the design requirements of the PCS with respect to ensuring safety of the NHSS. Demonstration cases and commercial configurations will be assessed to ensure that the NHSS and HPS function within their design basis envelopes throughout the assumed transient conditions.

Water Availability

Evaluate water availability to determine whether air cooling is necessary for the INL site, considering the extra cost associated with the large cooling surface required for air cooling.

Air Ingress

Prepare a white paper on air ingress relative to meeting the NGNP safety offsite requirements under abnormal events. Consider similarities and differences with the DPP design and its approach to chemical attack.

Quality Assurance Considerations of Fuel

Evaluate the Quality Assurance considerations of German fuel and Russian test data for licensing with the U.S. NRC.

Cyber Security

Evaluate the cyber security impacts on the overall plant safeguards and security system.

Continuing Interaction Related to Technology Development

In addition to the above future studies, which are specific in nature to the individual topics, it is recommended that there be a task which fosters continued interaction with INL/BEA regarding technology development and related cost estimates.

The Westinghouse Team is proud to present the PCDR and is ready, capable, and committed to proceed with the Path Forward for the PBMR-based NGNP.

REFERENCES

NONE

APPENDICES

APPENDIX 1A FINAL DESIGN REVIEW PRESENTATION TO BEA - BACKGROUND AND OVERVIEW

See attached presentation.

APPENDIX 1B FINAL DESIGN REVIEW PRESENTATION TO BEA - SUMMARY OF SPECIAL STUDIES

See attached presentation.

Background and Overview

Regis A. Matzie

Preconceptual Design Report
90% Design Review

May 8-10, 2007

P B M R

Westinghouse NGNP Team

P B M R

PBMR NGNP and Nuclear Heat Supply Building

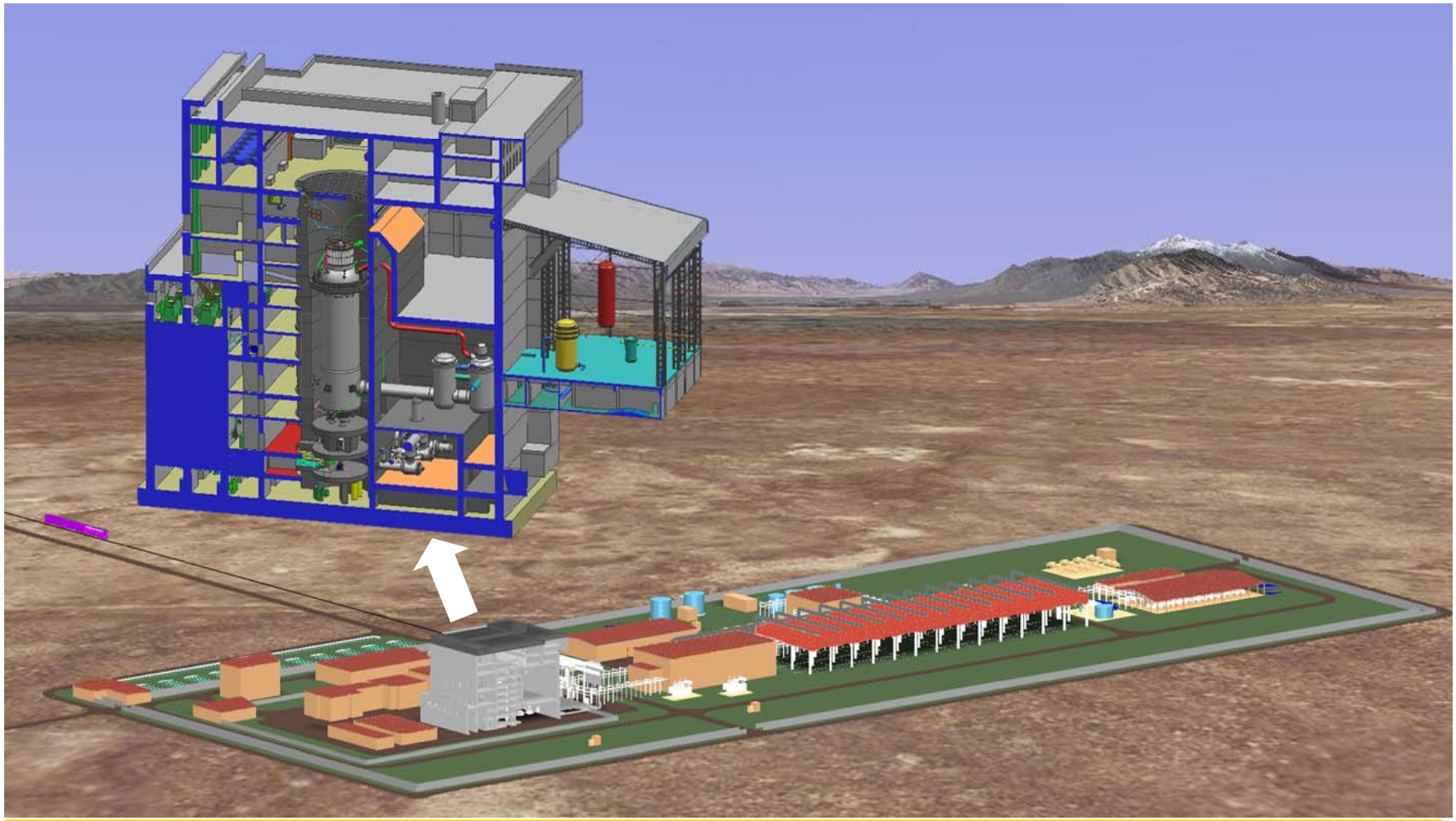

Slide 2

Westinghouse NGNP Team

P B M R

Overview

- Westinghouse Team and NGNP Support
- PBMR Baselines for NGNP Success
  - Demonstration Power Plant (DPP) and Related Facilities
  - Pre-application Program with the NRC
  - Process Heat Initiatives
- NGNP Project
  - Objectives
  - Top Level Assumptions
  - Scope
  - Leading Special Studies
  - Design Configuration, Plant Layout
  - Technology (R&D) Plans
  - Schedule
  - Path Forward

P B M R

Support for the NGNP Project

- **Westinghouse-led Team is committed to the success of the NGNP Project - by deploying the PBMR Process Heat Plant (PHP) coupled to one or more advanced process heat/H2 production technologies, e.g., HyS and HTE**
- **Team's major value added element is the PBMR DPP Project and related fuel manufacturing and test facilities in SA, plus Pre-application Design Certification Program with the NRC and Process Heat Project initiatives – as follow-on or fallback to NGNP**
- **A PBMR-based NGNP assures a new commercialization phase for nuclear energy for production of process heat and bulk hydrogen without carbon emissions – at the lowest costs and risks for the US Government**
- **Our Team is supportive of Utility and End-User based NGNP Alliance forming Public-Private Partnership with DOE for deploying the NGNP**

Westinghouse NGNP Team

Team is composed of world class nuclear power, process, and hydrogen production plant companies and expert personnel

P B M R

PBMR Baseline for NGNP Success

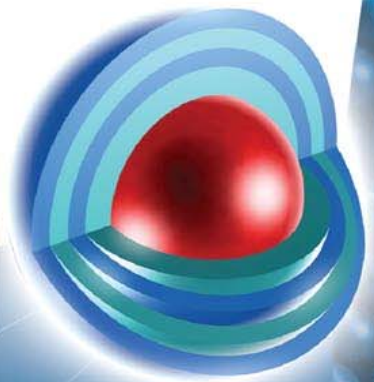

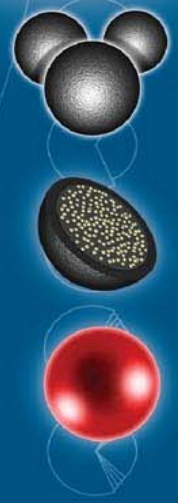

Investors in PBMR (Pty) Ltd.

- Republic of South Africa (RSA) Government
- Industrial Development Corporation (IDC) of RSA
- Eskom (National Utility)
- Westinghouse

Demonstration Power Plant

PBMR identified as a National Strategic Project

P B M R

Status of Demonstration Power Plant (DPP)

- Design well-founded on German experience, including 2 demonstration plants, plus common technology base with US, Japan, Others
- Sited at existing Eskom Koeberg nuclear site; Eskom plans follow-on multi-module commercial units; LOI for 24 modules)
- Currently ~700 full-time staff and ~1200 total working on project
- ~500M$ invested to date; next 800M$ already in RSA Gov't budget
- International supply team in place and long lead procurement and manufacturing started
- First fuel from commercial size coater by late 2007 available for testing; Pilot fuel plant EIA issued, 2012 production scheduled
- Key systems/components testing program underway
- DPP SAR nearing completion; Construction start scheduled for early 2009
- Commercial operation scheduled for 2014
- Provides platform for expanded applications

DPP Main Electric Power System

- Brayton power cycle
- 400MWt / 165MWe
- 900ºC core outlet temperature
- 9 MPa pressure
- On-line refueling
- Established LWR materials and codes

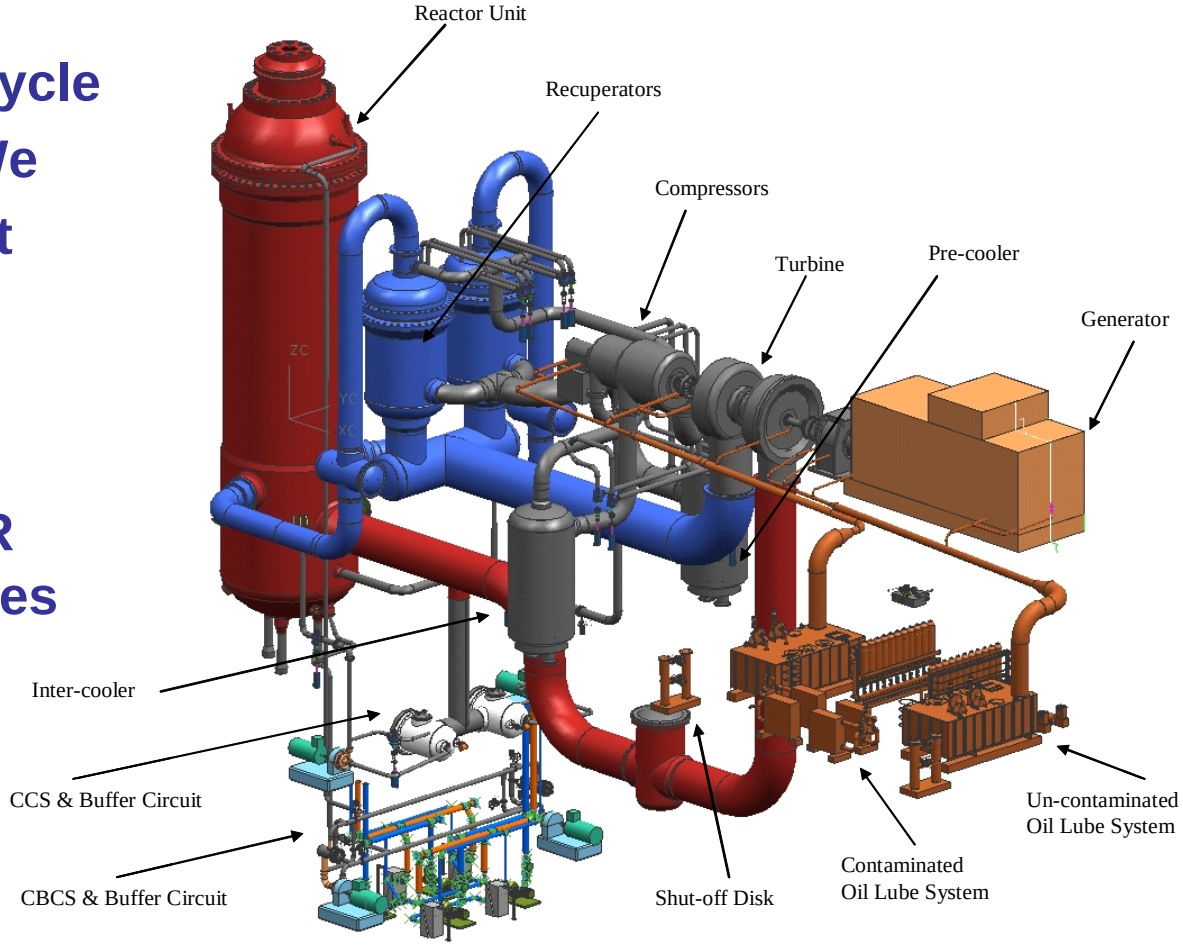

P B M R

DPP Building Layout

Height total	62.9 m
Height above ground	40.9 m
Depth below ground	22 m
Width	37.0 m
Length	66.1 m
Levels (floors)	11
Concrete material	40 MPa
Seismic acceleration	0.3 g horiz
Aircraft crash resistant	

Plant Cutaway

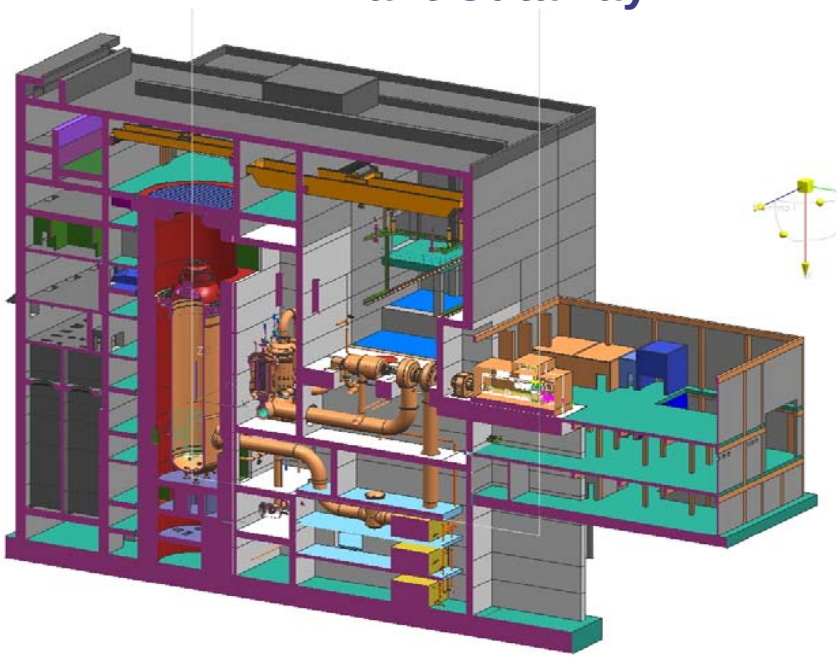

Top View with Citadel

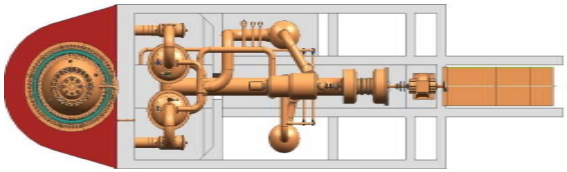

PBMR Fuel - Safety Concept

Established UO2 Fuel with 950ºC Core Outlet Temperature Capability

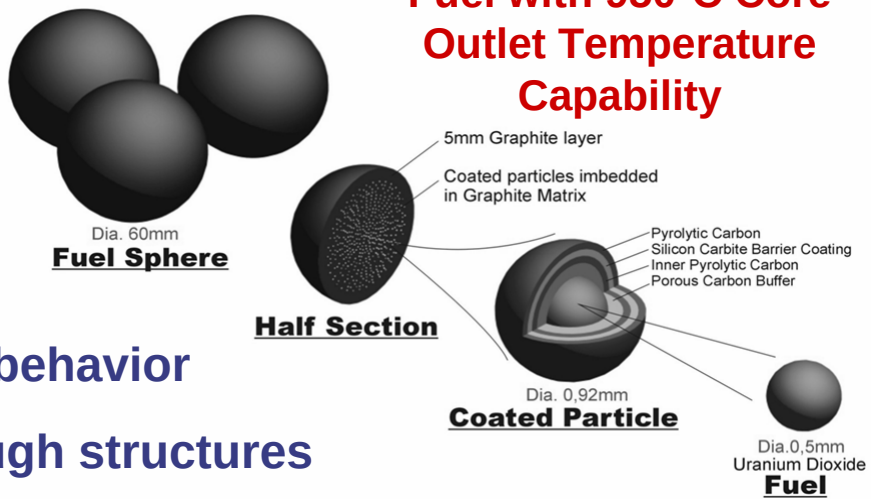

- Ceramic coated fuel particles provide primary radionuclide barrier
- Helium gas is a single phase coolant and chemically & radiologically inert
- Low power density and large thermal capacity ensures slow core transient behavior
- Core heat removed passively by through structures
- Passive heat transfer and high fuel temperature capability preclude a core melt possibility, even with loss of helium coolant pressure and active systems
- Added safety margins allow siting in close proximity to process plants
- High burnup, flexible fuel cycle (recycle, Pu, Th), reduced wastes, proliferation resistant

P B M R

PBMR Fuel Supply

- **Strategic Framework**
  - **Utilize Proven and Safe Technology**
  - **Effectively Transfer Fuel Manufacturing Know-How**

R&D Lab → **Upscale** → **Pilot Fuel Plant** → **Optimize** → **Commercial Fuel Plant**

- **Technology Transfer**
- **Equivalence**

- **Large scale batch process**
- **270,000 spheres/yr**
- **Supply DPP & at least first 6 reactors**

- **Continuous process and automation**
- **2.7 M spheres/yr**

P B M R

Advance Coater Facility

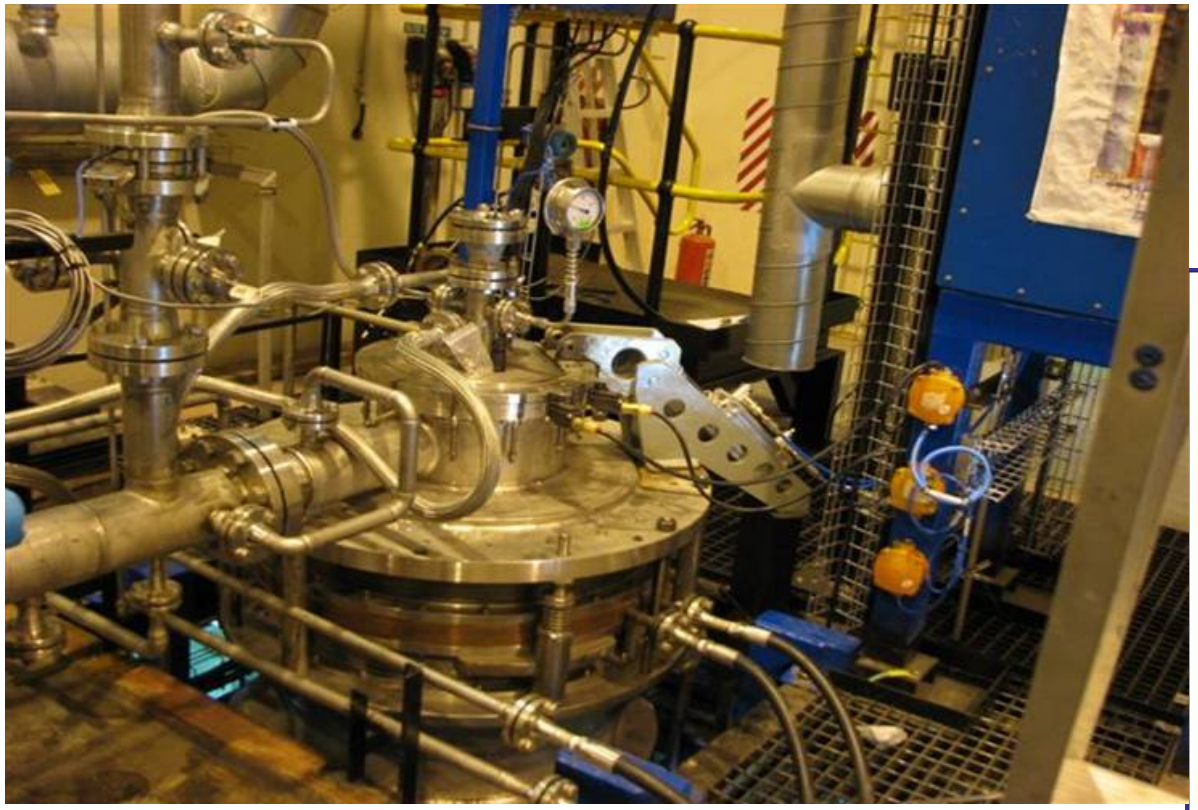

Objectives

- Early production of fuel for irradiation testing
- Hands-on commissioning and operational experience

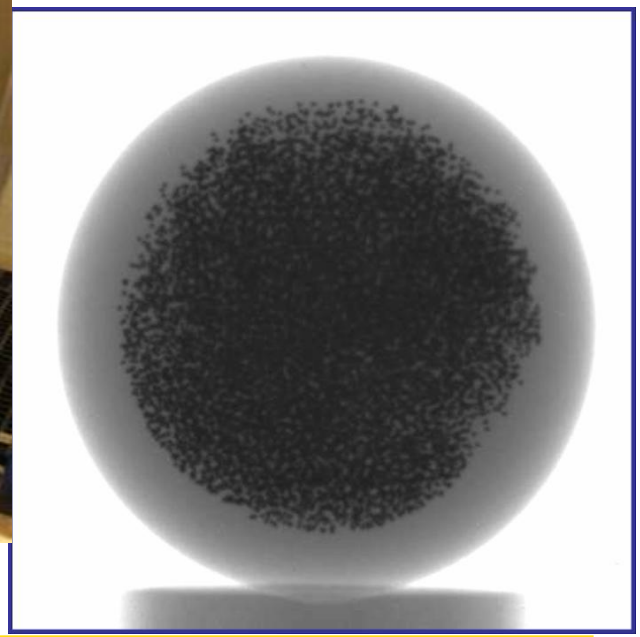

Manufacturing of Long Lead Components Already Started

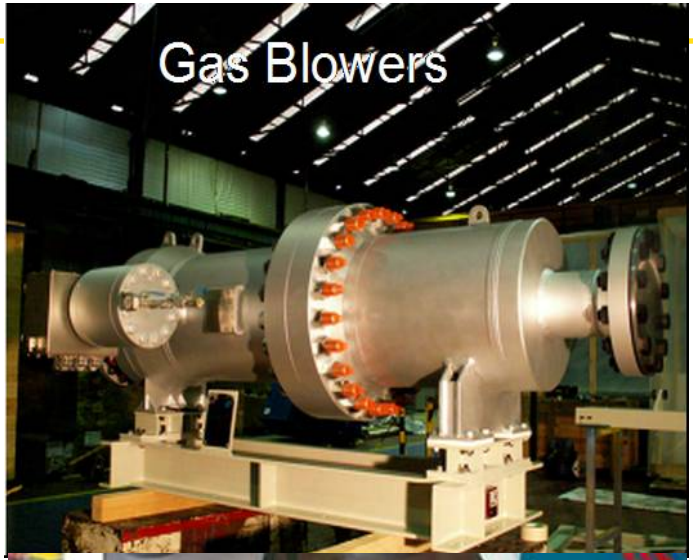

Test Facilities Supporting Design and Licensing

- Pebble Bed Micro-Model
- Helium Test Facility
- Heat Transfer Test Facility
- Plate-out Test Facility
- Natural Convection with Corrosion (air ingress)
- Critical Facility
- Fuel Irradiation & Testing

From Left to right: HPTU Main test vessel, Blower vessel, Water cooler

Helium Test Facility

- Pressure range of 3.2 to 9.5 MPa
- Max flow at max pressure up to 2.5 kg/sec
- Temperature up to 600C (1200C in local test sections)
- Target Helium purification – 99.997%
- Full scale testing of fuel handling system, reactor control system, blowers, recuperator, valves

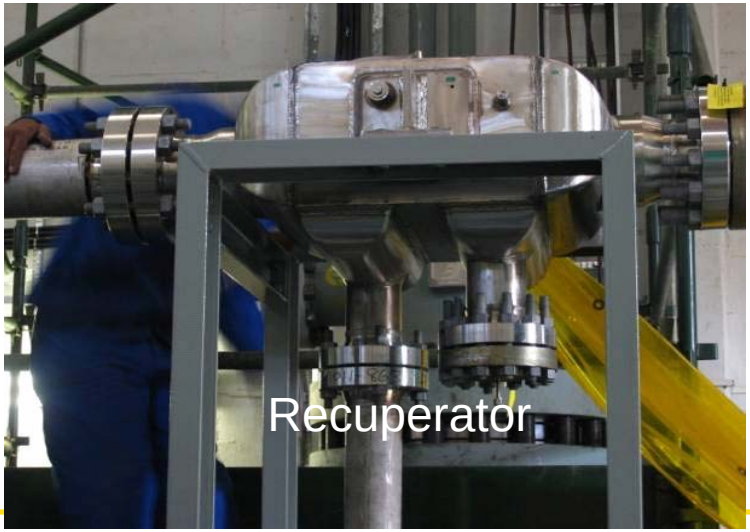

Heat Transfer Test Facility (HTTF)

Validate correlations used for pebble bed heat transfer and fluid flow phenomena simulations

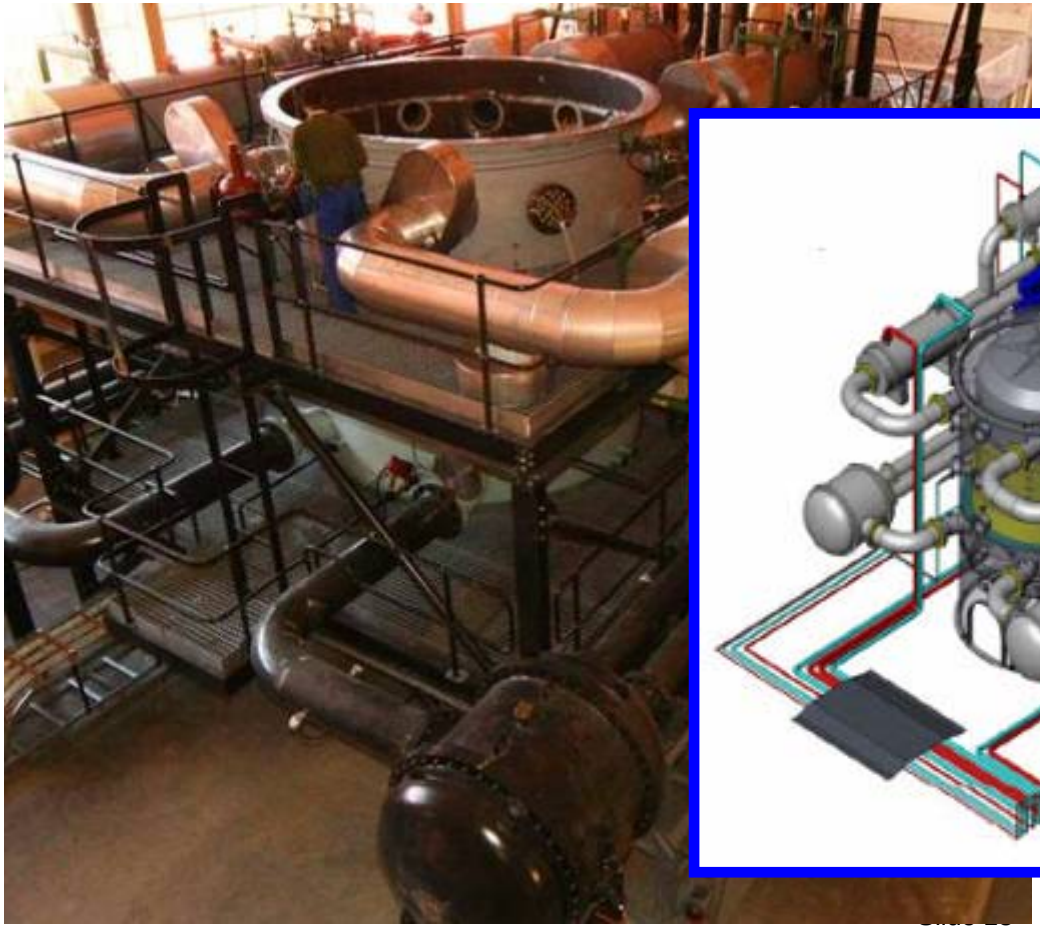

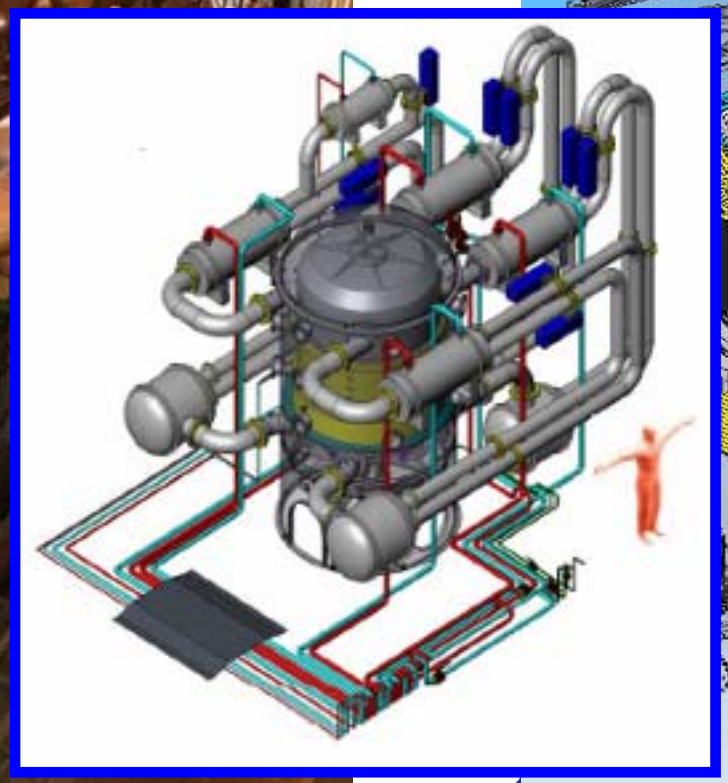

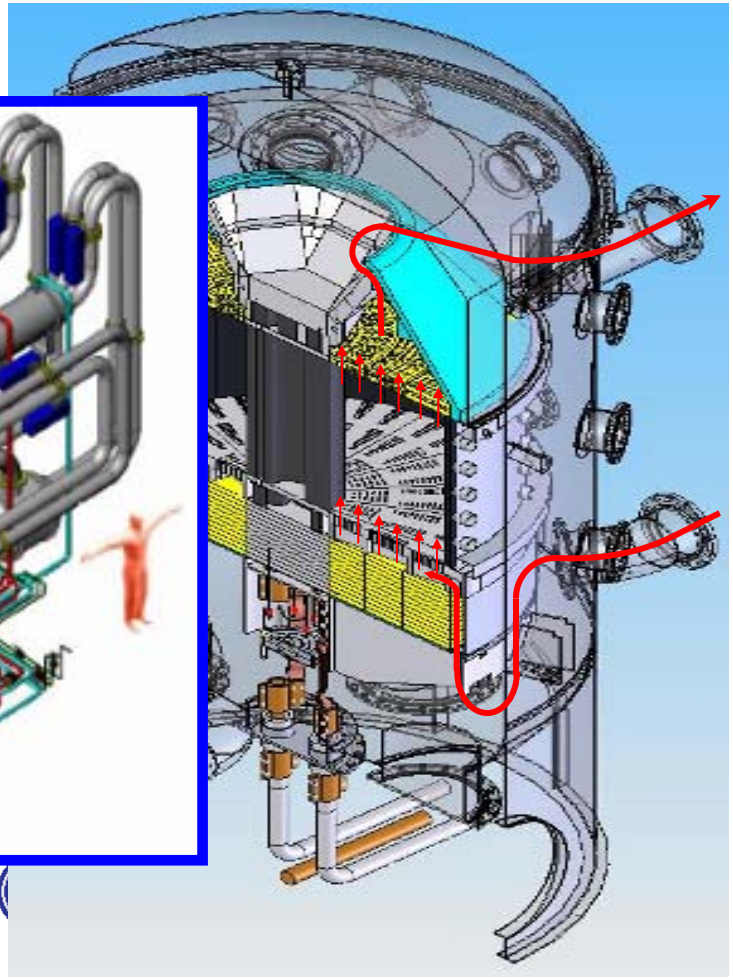

HTTF- High Pressure Test Unit

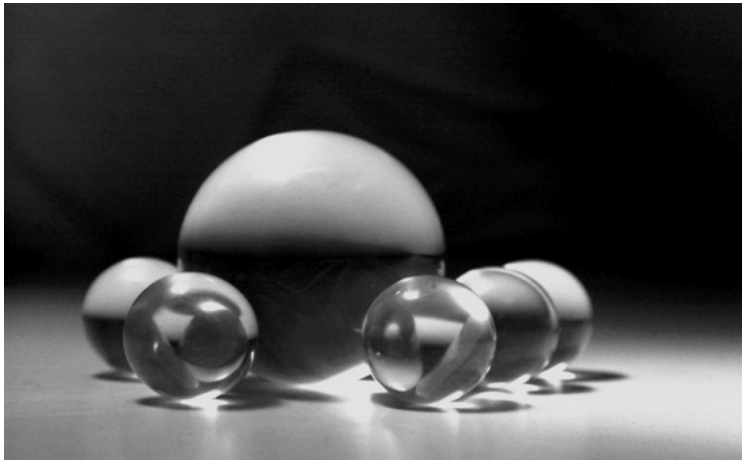

Pebbles used in the HPTU test sections – 60 mm and 30mm acrylic spheres

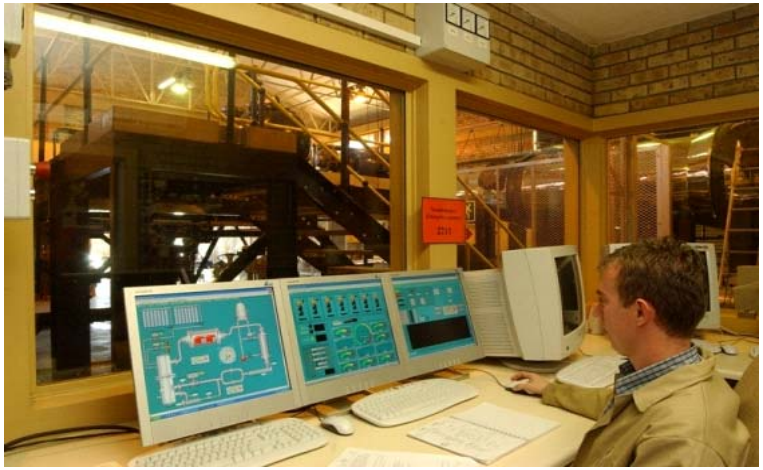

HPTU Control room

From Left to right: HPTU Main test vessel, Blower vessel, Water cooler

Construction of the test sections.

PBMR's NRC Design Certification Pre-Application Project

- Establish a clear path forward for licensing in the U.S. using performance-based, risk-informed approach
- Address unique HTGR technical issues related to safety
- Establish special testing and qualification activities with long lead times
- Pre-application targeted for completion in 2008
- High value baseline for NGNP Licensing Strategy

Current Pre-Application Topics - 4 White Papers Submitted to Date

- Selection of Licensing Basis Events (June '06) and PRA (July '07)
- Safety classification of Structures, Systems and Components (Aug '06) and Defense-in-Depth (Dec '06)
- Fuel design and qualification
- Mechanistic radionuclide source term
- Applicable codes and standards & materials selection
- Computer code Verification & Validation
- Single vs. multi-module certification
- Physical security considerations in design

PBMR Applications

There are two broad applications for the PBMR:

- **Electricity generation where smaller incremental market conditions prevail, including limited financing, transmission or cooling water resources, also well suited for water desalination – DPP underway in RSA**

- **Process heat applications, including hydrogen production, needing process temperatures up to 900ºC, with options for process steam/cogeneration – NGNP Project under development**

PBMR Product Development Path

EOR – Enhanced Oil Recovery
OSP – Oil Sands Production
Syngas – H_2 and CO Production

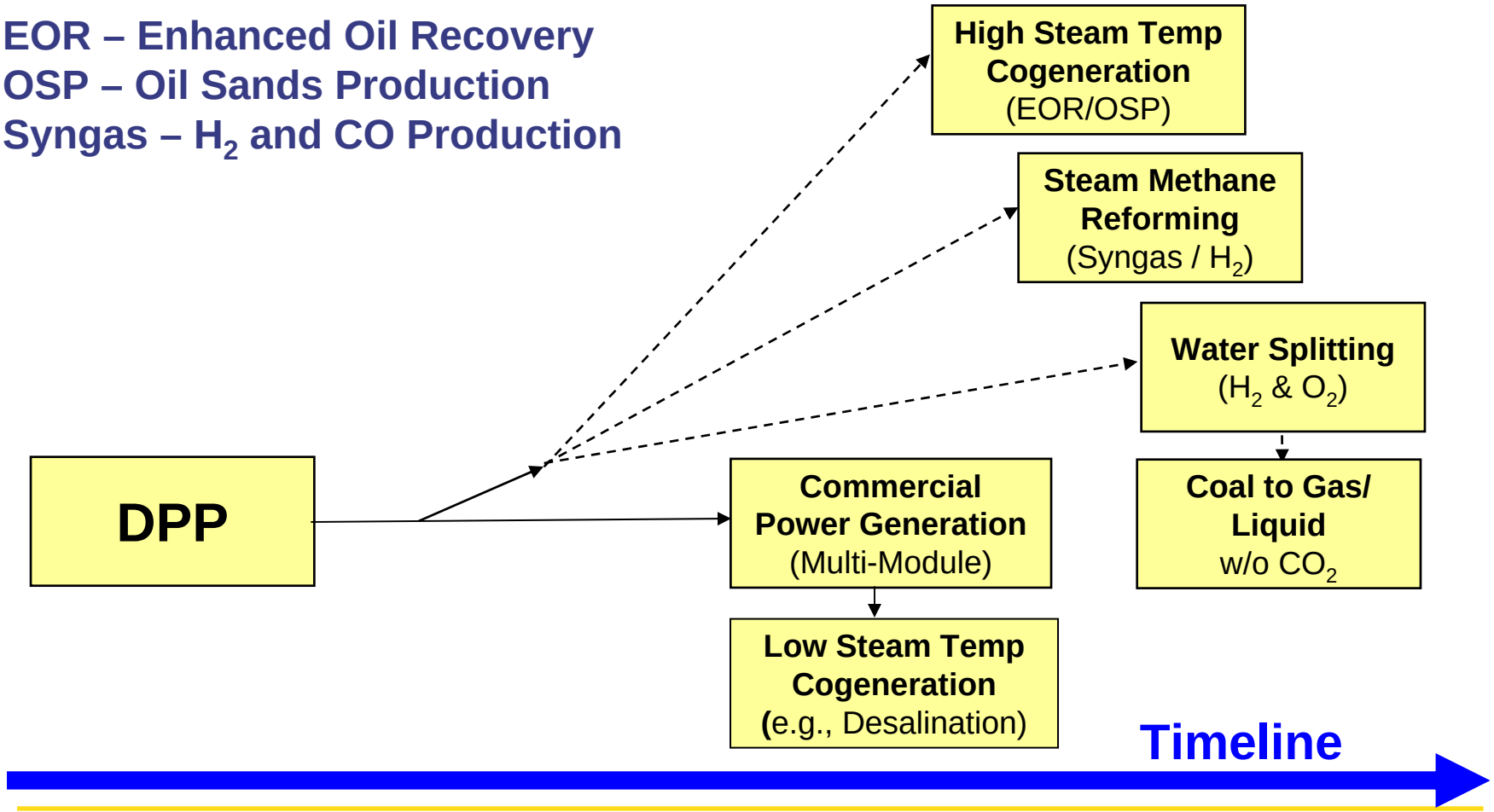

Process Heat Applications

- **Steam Generation**
  - Oil Sands Recovery
  - Enhanced Oil Recovery
  - Cogeneration, including Desalination, Ethanol
- **Steam Methane Reforming**
  - Hydrogen
  - Ammonia
  - Methanol
- **Water-Splitting**
  - Bulk Hydrogen
  - Coal-to-Liquids
  - Coal-to-Gaseous Fuels

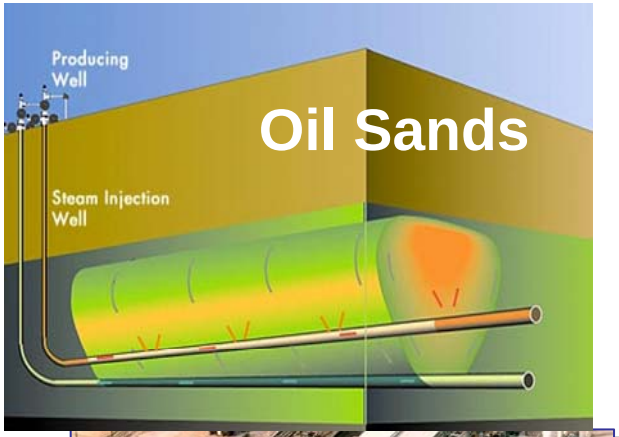

P B M R

PBMR Baseline for NGNP Success

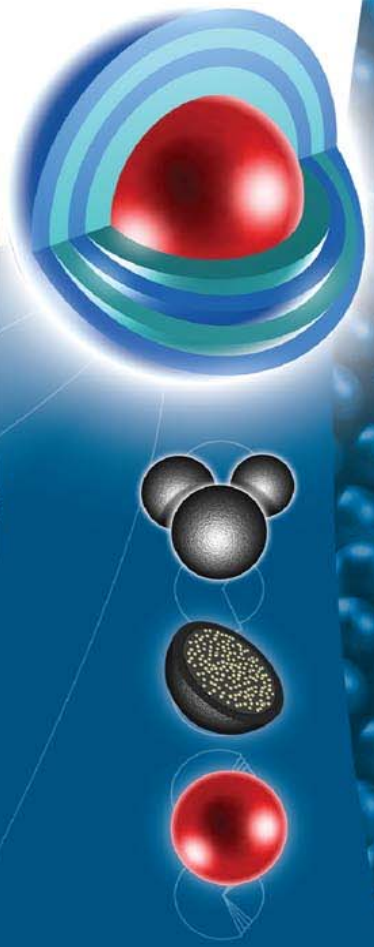

P B M R

NGNP Objectives

Develop and demonstrate design, performance, operational, licensing and economic viability of VHTR technology to support commercialization

- ***Balancing performance objectives, development risk and schedule for commercialization***
- ***Assessing alternatives in design concepts to minimize development risk***
- ***Establishing a reference commercial configuration for NGNP development and licensing***

P B M R

Assumptions - Project Roles and Arrangements

- NGNP Alliance is established to consolidate the User stakeholder support.
- Public (DOE led) / Private (Alliance led) Partnership (PPP) entity is the Project Manager and Applicant
- DOE owns the NGNP plant and receives offsetting revenues from the sale of power, hydrogen and oxygen
- INL provides staff support to PPP, including the coordination of US Lab R&D support
- NRC licenses the plant and conducts selected R&D needed to independently verify the safety performance of the design
- PPP down-selected vendor team provides the full scope of plant design, delivery and startup, plus fuel supply and services
- Vendor team concurrently advances follow-on commercial projects with User clients
- PPP to select commercial based nuclear operator to operate the plant
- NGNP will serve a long-term mission to demonstrate multiple advanced process heat and hydrogen production technologies, plus serve as a test bed for advanced fuels, materials, components

Assumptions – PBMR Specific for NGNP

- Reactor Facility is the first unit outside South Africa and has full advantage of the PBMR DPP experience. Reactor and Fuel related design and R&D is incremental to the PBMR DPP effort.
- Heat Transport System, including the IHX and helium circulators, is the first-of-a-kind full scale demonstration unit.
- Hydrogen Production Facility is the first-of-a-kind commercial size train unit.
- Initial core and reload fuel for the first 6 years is provided by PBMR's pilot fuel plant
- Reload fuel thereafter will be provided by a commercial fuel plant in the US established by PBMR, Westinghouse and NFS, as PBMR market expands in the US

P B M R

NGNP Preconceptual Design Scope

- Leading Special Studies – e.g. Reactor type; Power level; Heat transport configuration; Reference H2 process, sizing, by-products; Licensing issues
- Top Level Plant Requirements, Systems Engineering, Plant Integration
- Plant Design
  - Nuclear Heat Supply System and Fuel – Builds on DPP
  - Heat Transport System
  - Hydrogen Production System
  - Power Conversion System
  - BOP and Site
- Operations, Maintenance, Availability, Safeguards & Security
- Safety and Licensing
- Technology Development (R&D) Plan
- Schedule and Costs

Special Study Conclusions

- **Reactor Type Comparison – pebble bed core per DPP**
- **Power Level – commercial-scale power of 500 MWt**
- **Heat Transport – indirect cycle that transfers heat though a large two section IHX to a helium secondary loop for hydrogen production with a bottoming power generation cycle**
- **Power Conversion System – Rankine steam cycle**
- **H2 Demo Sizing, Byproducts & Effluents Study – commercial size train of 50 MWt**
- **NGNP Licensing & Permitting Strategy – early pre-application interactions leading to one-step Part 52 process (ESP and COL)**

Commercial PBMR PHP/ HyS Application

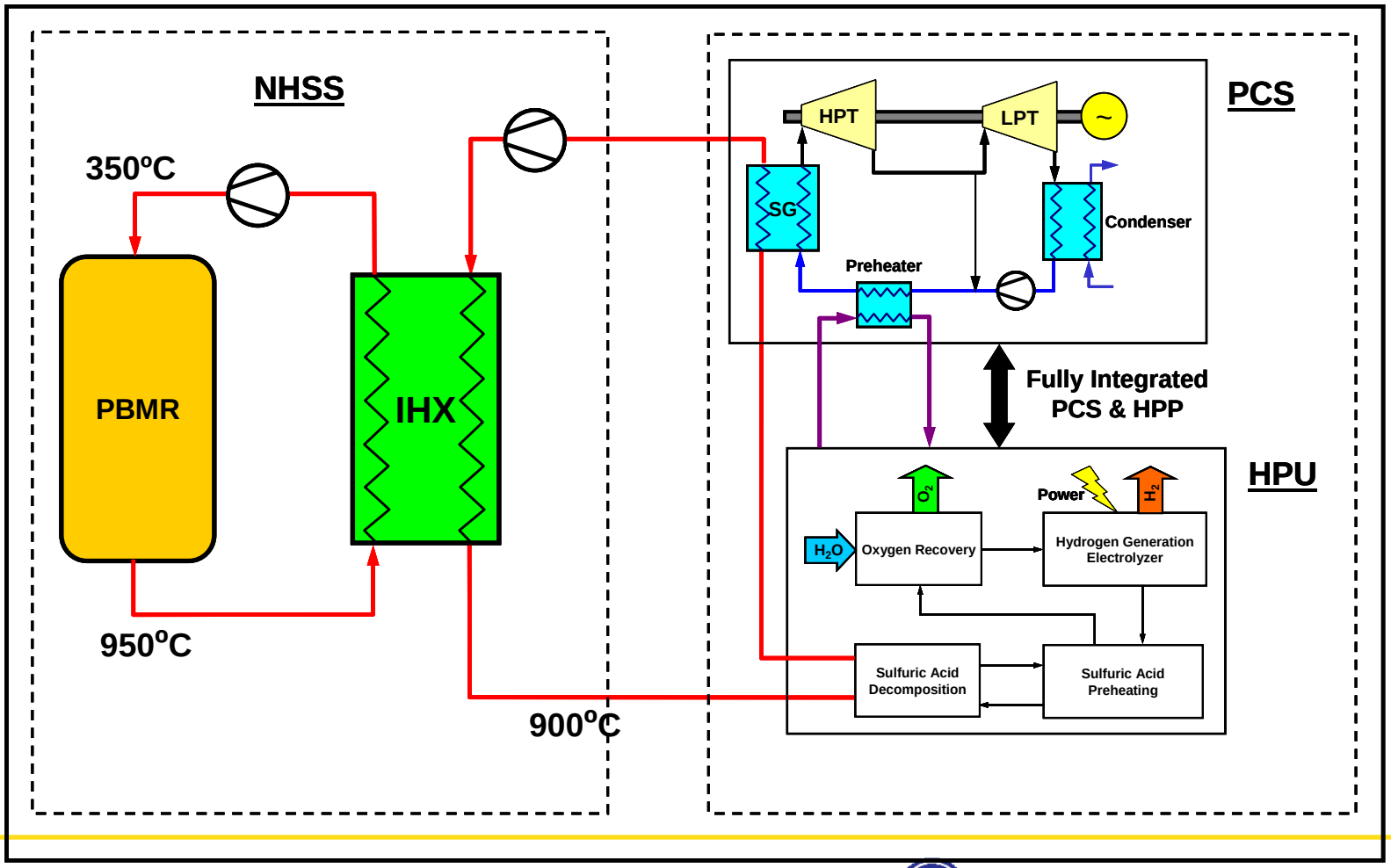

Reference PBMR NGNP Design

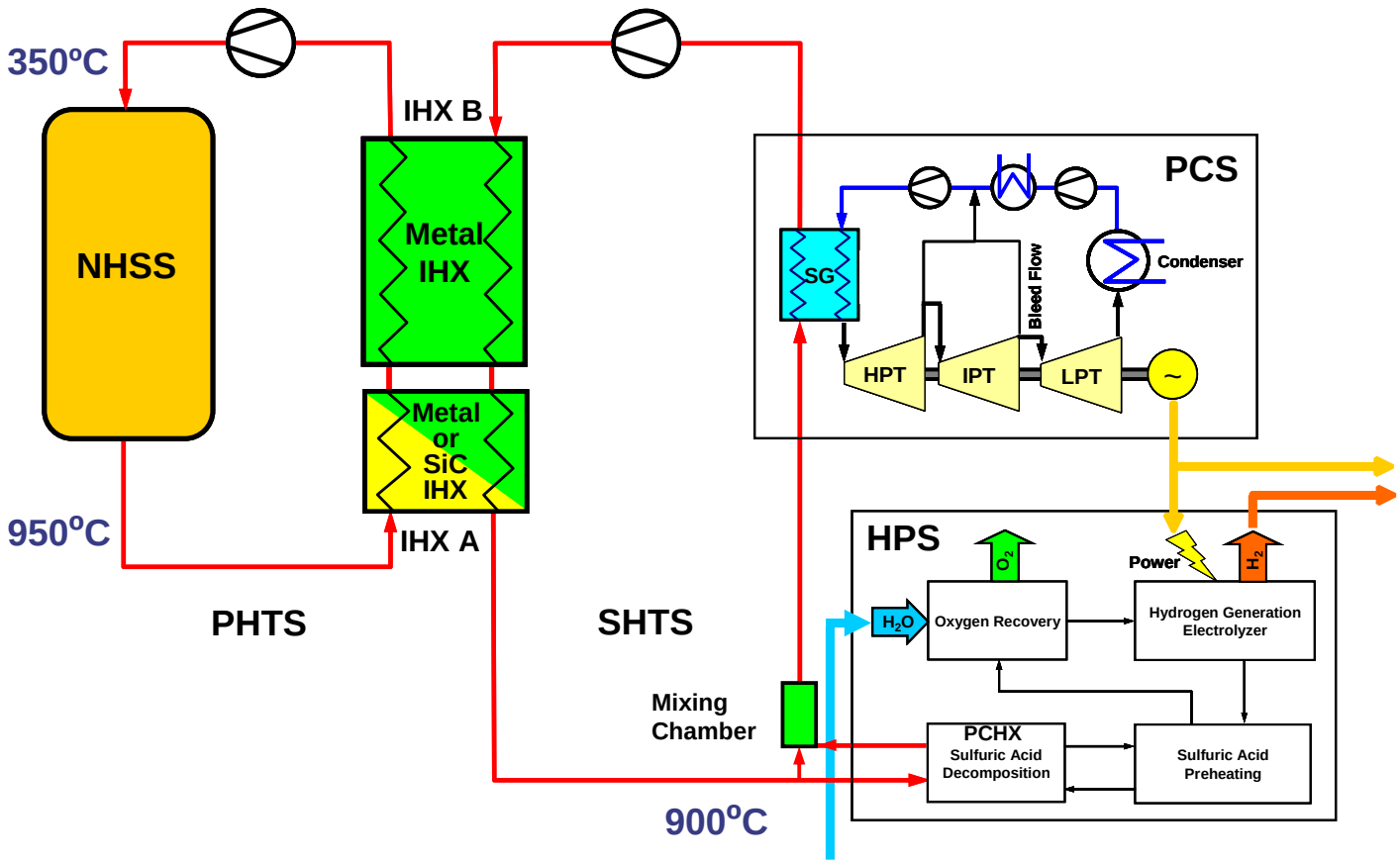

PBMR Concept for NGNP

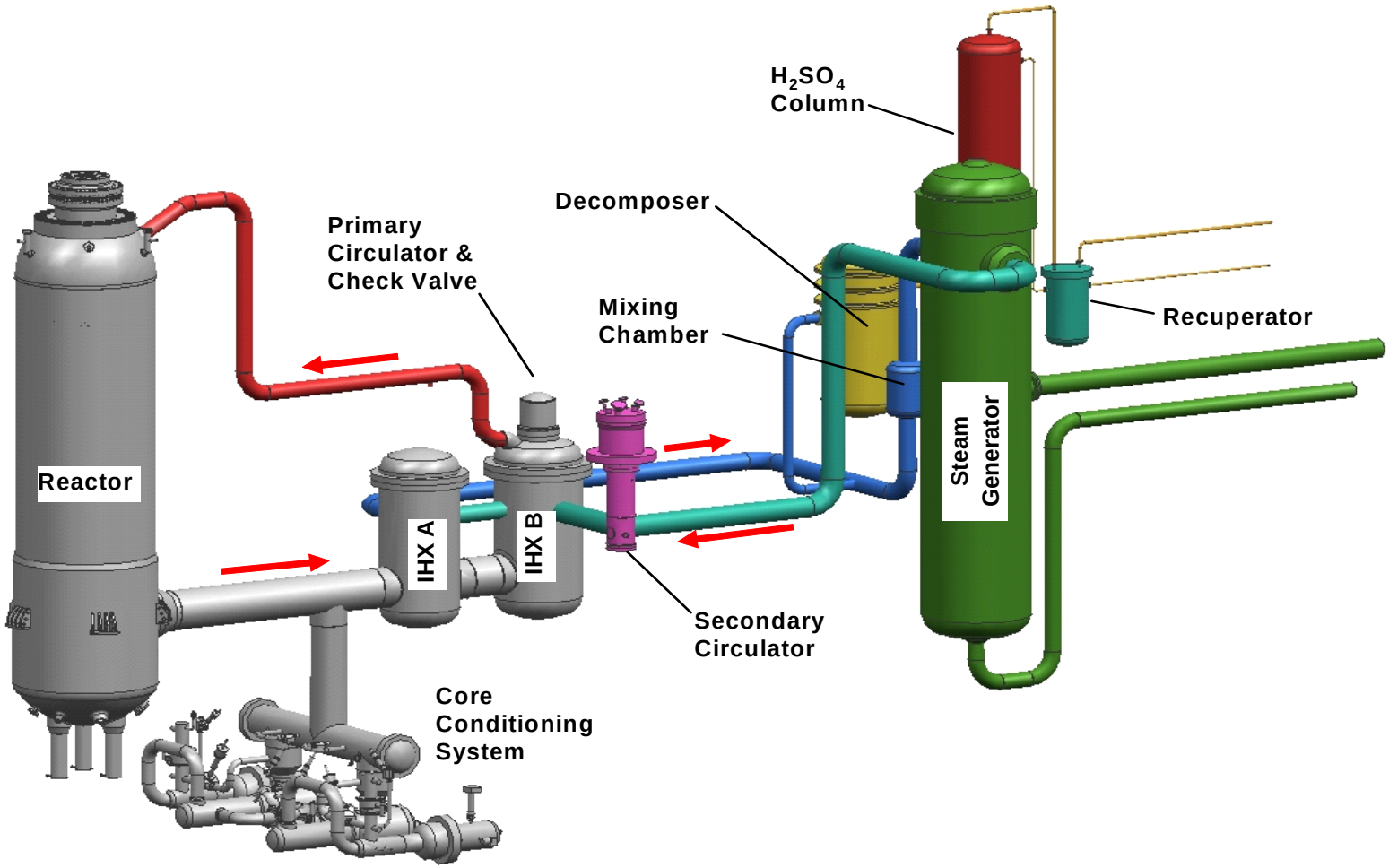

NGNP Plot Plan

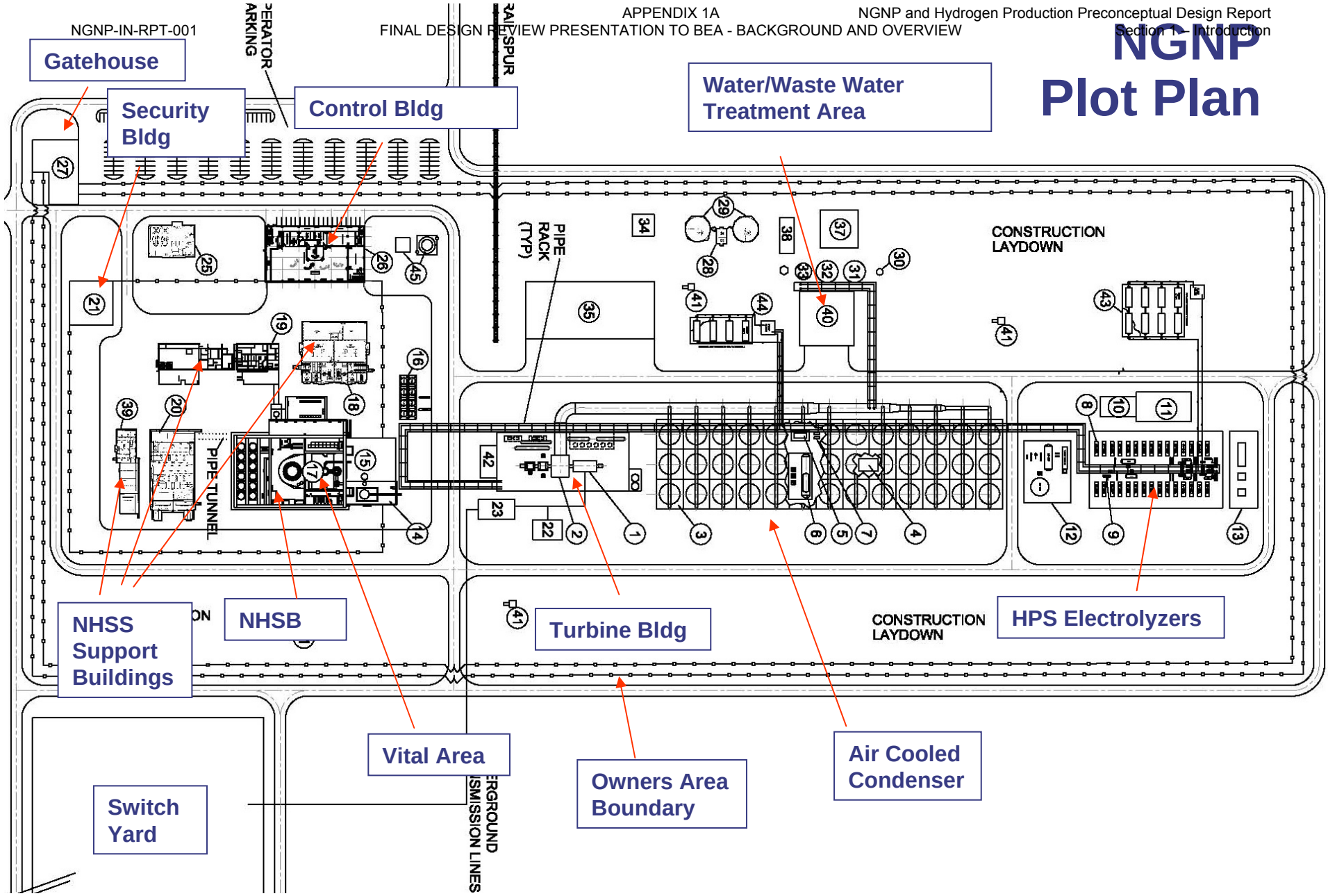

Technology Development Overview

- Enabling Technology Requirements ($184M)
  - **Nuclear Heat Supply System (Incremental to the DPP)**
    - **Extend Fuel (~$45M) and Graphite (~$5M) Qualification for NGNP conditions**
  - **Heat Transport System ($53M)**
    - **Intermediate Heat Exchanger – metallic and ceramic**
    - **Test facility**
  - **Hybrid Sulfur Process Development ($58M)**
    - **Materials, thermo-chemical and kinetic properties**
    - **Decomposer, Electrolyzer**
  - **Power Conversion System - Steam Generator ($23M)**
- Leading Enhancing Technologies Identified
  - **Advanced fuel design, manufacturing and deep burn fuel cycles; Long-lived graphite**
  - **Plant level coupling and select design code enhancements with V&V**
  - **Liquid Salts – secondary coolant**

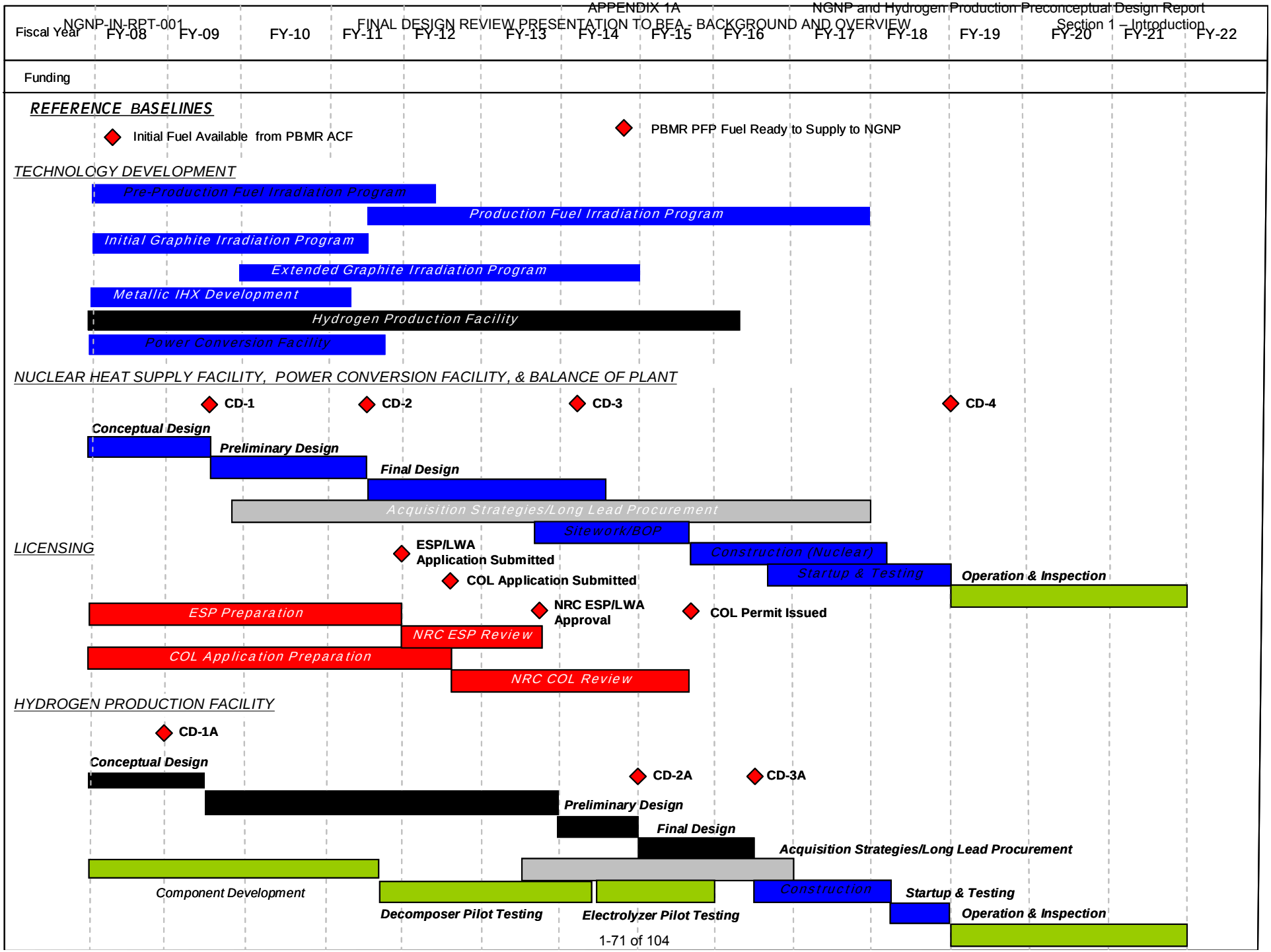
Fiscal Year
FY-08
FY-09
FY-10
FY-11
FY-12
FY-13
FY-14
FY-15
FY-16
FY-17
FY-18
FY-19
FY-20
FY-21
FY-22
Funding
REFERENCE BASELINES
Initial Fuel Available from PBMR ACF
PBMR PFP Fuel Ready to Supply to NGNP
TECHNOLOGY DEVELOPMENT
Pre-Production Fuel Irradiation Program
Production Fuel Irradiation Program
Initial Graphite Irradiation Program
Extended Graphite Irradiation Program
Metallic IHX Development
Hydrogen Production Facility
Power Conversion Facility
NUCLEAR HEAT SUPPLY FACILITY, POWER CONVERSION FACILITY, & BALANCE OF PLANT
CD-1
CD-2
CD-3
CD-4
Conceptual Design
Preliminary Design
Final Design
Acquisition Strategies/Long Lead Procurement
Sitework/BOP
Construction (Nuclear)
Startup & Testing
Operation & Inspection
LICENSING
ESP/LWA Application Submitted
COL Application Submitted
NRC ESP/LWA Approval
COL Permit Issued
ESP Preparation
NRC ESP Review
COL Application Preparation
NRC COL Review
HYDROGEN PRODUCTION FACILITY
CD-1A
CD-2A
CD-3A
Conceptual Design
Preliminary Design
Final Design
Acquisition Strategies/Long Lead Procurement
Component Development
Decomposer Pilot Testing
Electrolyzer Pilot Testing
Construction
Startup & Testing
Operation & Inspection

Cost Development Process

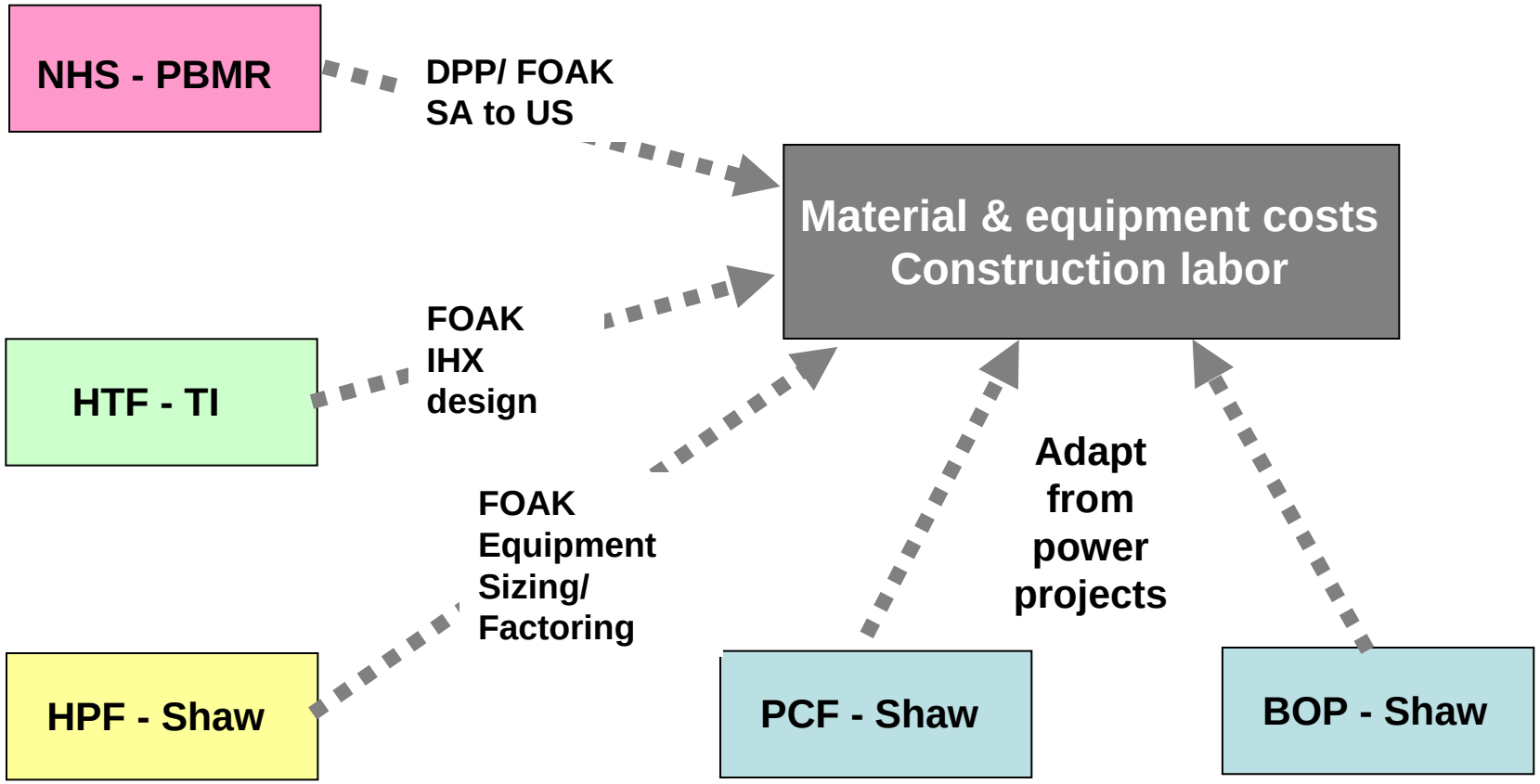

Path Forward

- Conduct "Future Studies" e.g.
  - Applications envelope - Consolidate top level requirements
  - Plant layout, plant embedment, etc
- Initiate Conceptual Design
- Consolidate/Implement Licensing Strategy – build upon PBMR's pre-application program - implement NGNP pre-application program
- Advance critical-path enabling technology development, e.g.
  - IHX materials qualification and design methods
  - Fuel and Graphite qualification
  - Hydrogen process development
- Develop acquisition strategies for long lead procurement of major equipment
- Develop and implement risk mitigation strategies.

PBMR Baselines for NGNP Success

- DPP design, licensing and technology development are largely applicable
  - Existing Design Verification & Support programs and test facilities
  - Fuel development and supply from pilot manufacturing plant; fuel available for testing in 2008, production fuel for qualification by 2012
- NRC Pre-Application interactions to establish risk-informed, performance-based licensing bases which are largely generic, e.g.
  - Selection of Licensing Basis Events
  - Safety classification
- PHP project initiatives to establish early users and applications
  - User requirements, application-specific project assessments
  - Integrated commercial plant concepts
- Established, integrated Project Team led by Westinghouse

Summary of Special Studies

Fred Silady

Preconceptual Design Report
90% Design Review

May 8-10, 2007

P B M R

Westinghouse NGNP Team

P B M R

Objectives of Special Studies

20.1 Reactor Type Comparison- evaluate and select a reactor core type

20.2 Prototype Power Level - select the demonstration reactor power level

20.3 Heat Transport - evaluate & select a Heat Transport System

20.4 Power Conversion System - evaluate & select a Power Conversion System

20.7 H_2 Byproducts & Effluents Study - select the size of the hydrogen demo & evaluate related by-products & effluents

20.6 Licensing & Permitting Strategy - address specific licensing strategy issues

P B M R

Approach to Special Studies

- Objective defined
- Discriminating criteria determined and weighted
- Alternatives selected
- Each alternative scored against each weighted criteria
- Results examined and a choice made
- Areas for future design focus and for R& D noted

20.1 Reactor Type Comparison

Objective: Comparatively assess the relative merits (pros and cons) of the pebble bed and prismatic modular HTGR core concepts

Reference designs for comparison:

- PBMR PHP: Pebble core based on 500MWt with 950°C core outlet
- H2-MHR: Prismatic core based on 600MWt with 950°C core outlet
  (reference: H2-MHR Conceptual Design Report SI-Based Plant, GA, INL, Texas A&M, GA-A25401 April 2006; AREVA prismatic design assumed to be very similar)

Fundamental Difference 1: Fuel Arrangement within Fuel Element

Fundamental: fueled region of pebble has lower packing fraction of fuel particles than prismatic fuel compacts

- Influence: fuel performance
  - pebble fuel particles have less chance of compacting process-induced failures

Fundamental: fueled region of pebble has lower particle density than prismatic fuel compacts

- Influence: fuel performance
  - pebble has lower maximum and average fuel temperatures during normal operation

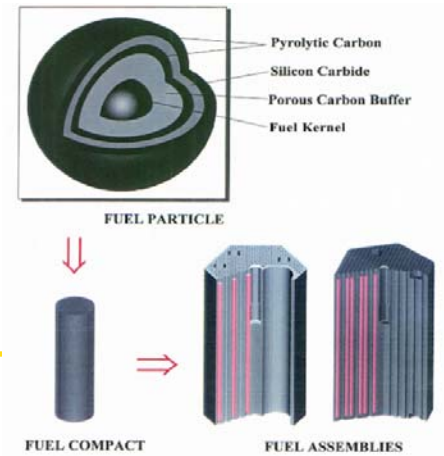

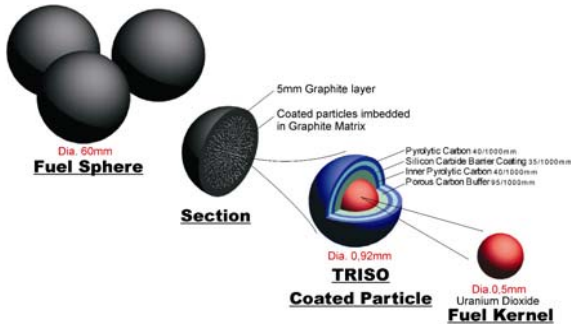

Fundamental Difference 2: Fuel Element-Coolant Geometry

Fundamental: pebble fuel overall closer to the coolant

- Influence: normal operation fuel temperatures
  - **for the same normal operation maximum fuel temperature limit, the pebble core can achieve a higher core outlet temperature**

  Or

  - **for the same core outlet temperature, the pebble core has lower normal operation maximum fuel temperatures**

Fundamental Difference 3: Fuel Element-Core Coolant Geometry

Fundamental: pebble core has more coolant volume

- Influence: axial neutronic stability
  - **for the same core height, pebble bed has greater axial neutronic stability**

  Or

  - **pebble core not as limited in height**

- Influence: power level
  - **for the same fuel element (solid) power density, core volume and geometry & peak fuel temperature limit during Depressurized Loss of Forced Cooling (DLOFC) events, the prismatic core can achieve a higher power level**

Fundamental Difference 3: Fuel Element-Core Coolant Geometry

Fundamental: pebble core has greater resistance to flow

- Influence: heat transfer
  - pebble core has better heat transfer from fuel element to coolant
- Influence: circulator/compressor power
  - for the same core height & helium pressure, the prismatic core has a smaller pressure drop through the core
- Influence: natural convection during Pressurized Loss of Forced Cooling (PLOFC)
  - pebble core design has less natural convection to transfer heat to challenge the upper core metallic components and to the reactor vessel

Fundamental: pebble core has greater mixing of coolant

- Influence: core outlet components and IHX/turbine performance
  - pebble core has reduced hot streaks

P B M R

Fundamental Difference 4: Core Refueling

Fundamental: pebble core refueled on-line

- Influence: scheduled outages for refueling
  - pebble core has no scheduled outage for refueling – better suited for continuous process heat based industries
- Influence: fuel burnup
  - pebble core has more flexibility in choosing optimum burnup for fuel performance; prismatic design has less flexibility in order to achieve economic refueling interval
  - pebble core has continuous measure of each fuel elements burnup; no analyses or margin needed to cover range of conditions
- Influence: forced outages associated with fuel handling
  - most unplanned outages of pebble fuel handling system can be repaired without impacting reactor availability

P B M R

Fundamental Difference 4: Core Refueling

Fundamental: pebble core refueled on-line

- Influence: excess reactivity
  - pebble core has less excess reactivity so that required control rod and reserve shutdown worths are smaller
- Influence: reflector replacement during plant lifetime
  - pebble core requires core unload every 15-20 years for replacement of the reflector; prismatic core replaces a fraction of the reflector as part of the off-line refueling

Fundamental Difference 5: Equilibrium Core Conditions

Fundamental: pebble core at equilibrium conditions >90% of its lifetime

- Influence: fuel manufacturing and reload complexity and QA
  - Pebble core has a one particle with single enrichment in initial core and single (but different) enrichment after initial startup; whereas, the prismatic core zones fissile and fertile fuel loadings and uses burnable poisons within fuel elements rearranged every refueling outage
- Influence: fuel performance
  - pebble core is more homogeneous - less extremes in fuel performance demands

P B M R

Pebble - Prismatic Summary of Fundamentals

- Pebble core has higher outlet temperature for a given normal operation maximum fuel temperature limit
  - lower power density within fueled region of fuel element
  - lower heat transfer resistance from fuel to fuel element surface
  - greater heat transfer from surface of fuel to coolant
- Prismatic core can achieve greater power within a given core volume & geometry, a given fuel element (solid) power density, and a given DLOFC maximum fuel temperature limit
  - lower coolant void fraction
- Pebble core can be taller
  - Not limited by axial neutronic stability
- Pebble core reduces hot streak potential to core outlet components
  - greater coolant mixing
- Pebble core requires larger circulator/compressor
  - higher resistance to flow
- Pebble on-line refueling offers basis for higher capacity factor and simplifies fuel manufacturing and reload complexity and QA

P B M R

Reactor Type Comparison Discriminating Criteria

Criteria	Weight
• **Readiness**	
– **Design maturity and limited enabling technology R&D required**	**High**
– Vendor / supplier / regulatory infrastructure	Medium
• **Performance**	
– **Process heat delivery**	**High**
– Capacity factor / investment protection	Medium
– **Safety**	**High**
– Safeguards / security `	Medium
– Wastes & other environmental impact minimization	Medium
– **Cost Competitiveness**	**High**
• **Enhancement Potential**	
– Fuel cycle flexibility & enhancement opportunities	Low

P B M R

Pebble & Prismatic Core Process Heat Designs

- Given the core type fundamentals, reactor designs are optimized to meet
  - application-based design requirements and schedule
  - economics
  - technology and planned R&D
- Pebble & prismatic reference designs
  - have not selected the same reactor dimensions
  - have not selected the same operating parameters
    - core inlet temperature
    - helium pressure
  - have not selected the same materials
    - UO_2 vs UCO fuel
    - core barrel material
    - reactor vessel material
  - have not chosen the same limits for
    - normal operation maximum fuel temperature limit
    - DLOFC maximum fuel temperature limit
- A comparison of specific reference designs is influenced by both the fundamentals and the design selections

P B M R

Reactor Type Summary Relative to Criteria

Criteria	Weight	PBMR NGNP	Basis
• **Readiness**			
– **Design maturity and limited enabling technology R&D required**	**High**	**Better**	**German fuel exp, DPP**
– Vendor / supplier / regulatory infrastructure	Medium	Better	DPP
• **Performance**			
– **Process heat delivery**	**High**	**Better**	**lower fuel temps**
Capacity factor / investment protection	Medium	Better	on-line fueling
– **Safety**	**High**	**Better**	**lower fuel temps**
– Safeguards / security	Medium	Comparable	both meet
– Wastes & other environmental impact	Medium	Better	lower activity, less volume
– **Cost Competitiveness**	**High**	Comparable	prismatic >power pebble avail matls & on-line refueling
• **Enhancement Potential**			
– Fuel cycle flexibility & enhancement opportunities	Low	**Better**	more potential more margins

P B M R

Reactor Type Comparison Conclusions

Pebble core technology offers many fundamental advantages and is the recommended design approach for the following reasons:

- Reduced R&D needs due to German experience with UO_2 fuel and DPP experience, including the selection of LWR reactor vessel steels and other code-qualified materials
- Much lower risk for achieving the core outlet temperature of 950°C
- Higher capacity factor due to on-line refueling
- Reduced potential for radionuclide releases due to demonstrated performance of the fuel and its lower normal operation temperature
- Attainable at lower overall forward costs and risks

20.2 Power Level Special Study

- **Small-scale versus commercial-scale demonstration:**
  - Integrated annular core demonstration requires full scale reactor (400 to 600MWt)
  - Small scale reactor (25 to 50 MWt) does not confirm the basic neutronics or thermal hydraulic design codes for a commercial plant
  - Small scale reactor does not support licensing strategy to apply Part 52 rules to demonstrate the one-step licensing process.
  - Small scale reactor negates any benefit of PBMR-DPP development investment.

Summary of the Best Power Level Alternatives

No R&D and design development required beyond DPP:

- **Case 2: 450MWt; Fixed Central Reflector (FCR) 2.0m dia same as DPP**
  - Immediately deployable
  - Lower mass flow – lower ΔP over reactor – smaller components
  - 12.5% increase in power level from PBMR-DPP

Minimal R&D required:

- **Case 5: 500MWt; FCR 2.0m dia same as DPP**
  - Minimal R&D for fuel qualification 1600 - 1700°C
  - 25% Increase in Power level from PBMR-DPP @ same capital cost

Modest R&D and design development required:

- **Case 7: 600MWt; FCR 2.4m dia**
  - Q_{max}/Pebble = 4.66 kW – exceeds THTR and DPP 4.5 kWt/pebble limit
  - FCR discharge chute design needs to be reevaluated
  - Minimal R&D for fuel qualification to 1700 °C
  - Higher ΔP over reactor

Power Level Study Recommendations

- **Full, commercial-scale demonstration**

- **500MWt reactor power**
  - Utilize PBMR-DPP reactor with only parameter changes
    - Reactor can be immediately used for NGNP
    - Benefit of PBMR-DPP design development
    - Reactor inlet temperature of 350°C
    - Reactor outlet temperature of 950°C
  - R&D limited to qualification of fuel performance for DLOFC 1600 - 1700°C

20.4 Power Conversion System Special Study

Objective: compare cycle configurations in order to identify representative Brayton Cycles, Gas Turbine Combined Cycles (GTCC) and Rankine Cycles as input to the HTS Special Study

Study conclusions and recommendations:

- Representative cycles chosen
  - Brayton Cycle – Single shaft recuperated cycle with intercooling
  - GTCC – Single shaft recuperated Brayton Cycle without intercooling and bottoming Rankine Cycle
  - Rankine Cycle – Conventional, coupled through a steam generator
- Net cycle efficiencies reduced with indirect configurations
- Net cycle efficiency of Rankine cycle not as sensitive to the coupling configuration and hydrogen production plant size as others.

20.4 Power Conversion Special Study

- Cycle B chosen as reference Brayton Cycle PCS
  - Best efficiency
  - Turbo machine growth path
- Cycle J chosen as reference Gas Turbine Combine Cycle (GTCC) PCS
  - Builds on current PBMR DPP Brayton design
- Conventional Rankine Cycle chosen for reference Rankine Cycle PCS

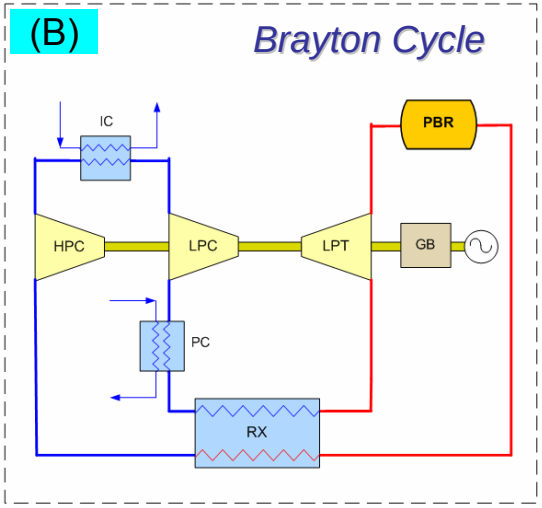

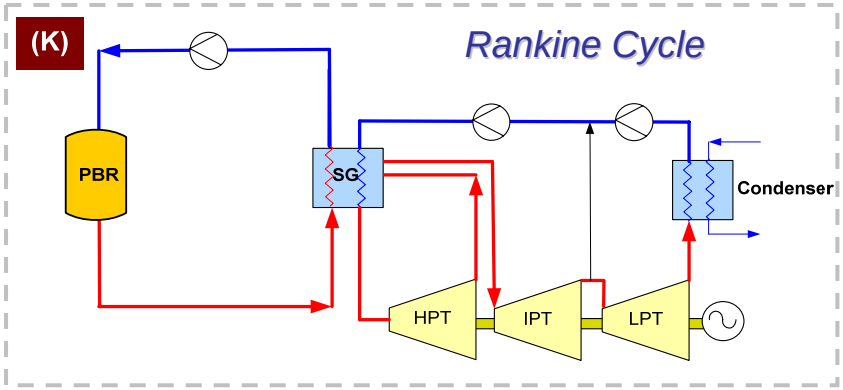

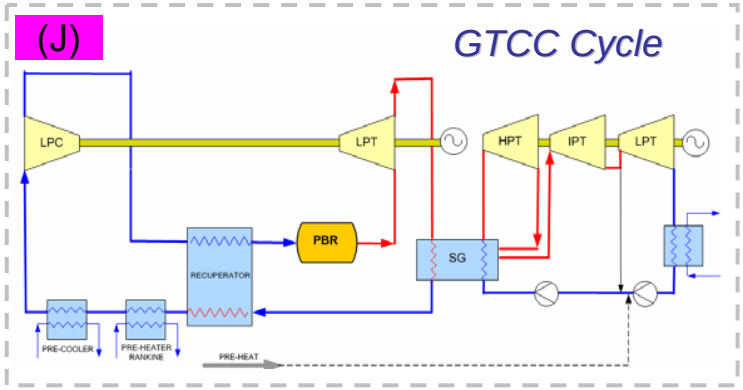

Recommended NGNP Configuration HTS Coupling to HPS and PCS

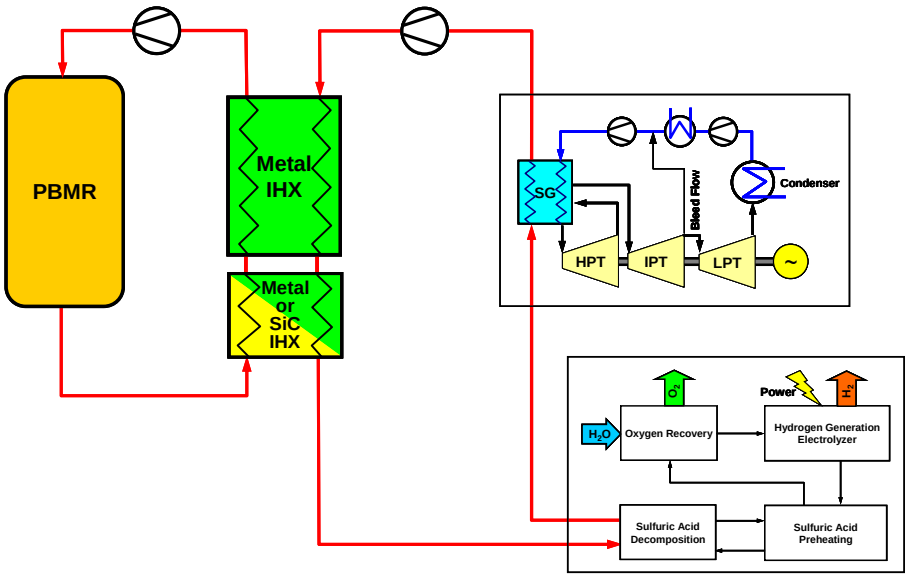

Option 6: Secondary Steam Cycle, Series PCHX

- **Full-size IHX**
  - **Best represents commercial applications**
  - **provides optimum basis for design certification of process heat applications**
- **Rankine cycle provides greater flexibility for balancing needs of demonstration loop and PCS**
  - Wide range of energy allocation to PCS (0 – 500MWt)
  - Can accommodate NGNP HPS expansion to commercial size (200MWt to PCHX)
- **Minimizes R&D and risk not directly associated with process heat objectives**
  - Best protects IHX against transient events (temperature, pressure)
  - Reduced SHTS return temperature
- **GT/GTCC commercial applications adequately supported by DPP in South Africa**

Recommended NGNP Configuration 2-Section IHX

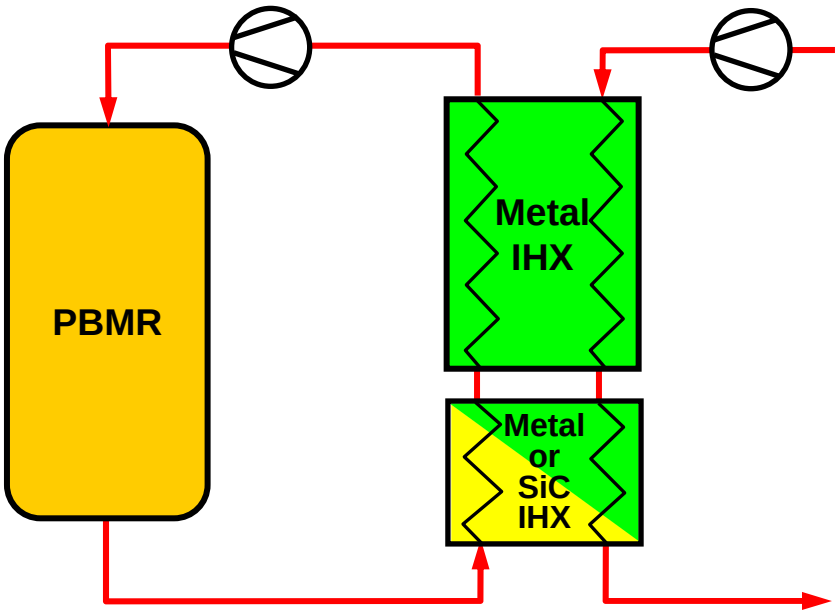

- 2-Section IHX applies ceramic or composite materials in high-temperature section, metal in low-temperature section
  - High-temperature section designed for replaceability
  - Low-temperature section designed for plant life
  - Transition temperature of ≤760C allows use of Code qualified Alloy 800H or comparable material
- Potential to start with metal in high-temperature section (short lifetime) and then replace with ceramic/composite when ready

20.7 Hydrogen By-Products & Effluents Special Study

Objectives:

- Determine size of H2 production process for adequate demonstration of commercial feasibility
- Identify production rate and local markets for each demonstration
- Identify product and by-product markets
- Identify additional processing requirements
- Identify waste streams and disposal means

P B M R

Smallest Required vs. Commercial Train Comparison

- Smallest Required
  - 5 MWt for HyS and SI
  - Comparable total PCHX duty for HTSE
  - Adequate commercial demonstration of the hydrogen plant
  - Smaller cost and risk
- Commercial Train
  - About 50 MWt for HyS and SI (4 trains for full-plant)
  - 50 MWth for HTSE full-plant with recuperation
  - Demonstration of effect of hydrogen plant operation on the nuclear reactor and heat transport systems
  - More convincing commercial demonstration, including operating costs
  - Facilitates expansion to full hydrogen production at NGNP

H_2 By-Product Special Study Conclusions

- Production from either HyS or SI small scale demonstration would support a fleet of local buses
- HTSE is at even smaller scale
- Research needed on the effect of likely impurities on each of the systems and likely operating concentrations
- Waste disposal does not impose limits on the demonstration size

P B M R

By-Products & Effluents Special Study Recommendations

- The size of the Hydrogen Production System (HPS) should be a full commercial train (nominally 50 MWt).
- Local markets for hydrogen and product specifications for these markets must be developed.
- Feed pre-treatment, product purification, waste treatment and disposal should be included in the HPS conceptual design.
- Focus research and development by selecting a preferred NGNP water-splitting technology
- Focus attention on developing practical flowsheets, gathering vital thermodynamic and phase equilibrium data, obtaining converged mass and energy balances, developing materials of construction, equipment design and involving industrial partners in the effort.

20.6 Licensing Special Study Objectives

- Perform a study to address the specific licensing tasks identified in the SOW
  - Provide related recommendations and their bases
  - Identify related concerns and open issues for inclusion in PCDR

20.6 Licensing Special Study Recommendations

- **Implement a licensing process for the NGNP Demonstration with the following features:**
  - Build on PBMR pre-application interaction, including risk-informed, performance-based methods
  - Application for Early Site Permit (with potential for an embedded Limited Work Authorization)
  - Application for Part 52 Combined Construction and Operating License (COL), pending a successful PBMR pre-application program
  - Use License-by-Test selectively as warranted by expected benefits to achieve end result, namely:
    - Timely full power operation of the NGNP Demonstration
    - Design Certification (DC) for the follow-on Commercial plant
  - Demonstrate H_2 production with separation distance and facility interactions that establish commercial plant precedents

P B M R

Special Study Selections

20.1 Reactor Type Comparison – pebble bed core similar to DPP

20.2 Power Level – commercial-scale power of 500MWt

20.3 Heat Transport – indirect cycle that transfers heat though a large, 2-section IHX to a helium secondary loop for H_2 production with a bottoming electricity generation cycle

20.4 Power Conversion System – Rankine steam cycle

20.7 H_2 Byproducts & Effluents Study - commercial-size train of 50MWt

20.6 Licensing & Permitting Strategy – early pre-application interactions leading to one-step Part 52 process

NGNP-02-RPT-001 **May 2007**
Revision 0

NGNP and Hydrogen Production Preconceptual Design Report

SECTION 2: TOP LEVEL REQUIREMENTS

Revision 0

APPROVALS

Function	Printed Name and Signature	Date
Author	Harold Gotschall Technology Insights	May 15, 2007
Reviewer	Fred Silady Technology Insights	May 15, 2007
Approval	Dan Mears Technology Insights	May 15, 2007

Westinghouse Electric Company LLC
Nuclear Power Plants
Post Office Box 355
Pittsburgh, PA 15230-0355

©2007 Westinghouse Electric Company LLC
All Rights Reserved

LIST OF CONTRIBUTORS

Name and Organization	Date
Charles Bolthrunis Shaw Group	May 2007
Keith Ludwig Air Products and Chemicals, Inc.	May 2007
Michael Correia Pebble Bed Modular Reactor (Pty) Ltd.	May 2007

BACKGROUND INTELLECTUAL PROPERTY

Section	Title	Description
NONE		NONE

REVISION HISTORY

RECORD OF CHANGES

Revision No.	Revision Made by	Description	Date
0	Harold Gotschall Technology Insights	Initial Issue	May 15, 2007

DOCUMENT TRACEABILITY

Created to support the following Document(s)	Document Number	Revision
NGNP and Hydrogen Production Preconceptual Design Report	NGNP-01-RPT-001	0

TABLE OF CONTENTS

LIST OF TABLES **2-6**

LIST OF FIGURES **2-7**

2 TOP LEVEL REQUIREMENTS **2-8**

SUMMARY AND CONCLUSIONS **2-8**

INTRODUCTION **2-10**

2.1 THE COMMERCIAL PBMR H2 PHP PLANT **2-12**

2.1.1 COMMERCIAL PLANT SUMMARY DESCRIPTION **2-12**

2.1.2 PROFILES OF USER STAKEHOLDERS **2-13**

2.1.3 USER INCENTIVES FOR PBMR H2 PHP DEPLOYMENT **2-14**

2.1.3.1 High Temperature Process Heat Capability 2-14
2.1.3.2 Reduced Risks of Nuclear Plant Ownership 2-14

2.1.4 COMPETITIVE COST AND RISK TARGETS **2-15**

2.1.5 USER-BASED POLICY STATEMENTS **2-16**

2.2 USER, REGULATORY AND PROJECT MISSION REQUIREMENTS FOR THE NGNP **2-19**

2.2.1 USER REQUIREMENTS FOR THE NGNP **2-20**

2.2.1.1 Overall NGNP Design Requirements 2-20
2.2.1.2 NHSS Facility Design Requirements 2-24
2.2.1.3 HPS Facility Design Requirements 2-32
2.2.1.4 PCS Facility Design Requirements 2-34

2.2.2 REGULATORY REQUIREMENTS FOR THE NGNP **2-36**

2.2.2.1 Federal Regulatory Requirements [2-6] 2-36
2.2.2.2 State and Local Regulatory Requirements 2-38
2.2.2.3 Codes and Standards 2-38

2.2.3 NGNP PROJECT MISSION REQUIREMENTS **2-39**

2.2.3.1 Develop and Demonstrate a Commercial-Scale Plant 2-39
2.2.3.2 Develop and Demonstrate Hydrogen Production 2-41
2.2.3.3 Develop and Demonstrate High-Efficiency Power Conversion 2-41
2.2.3.4 Obtain Licenses and Permits to Construct/Operate the NGNP 2-41
2.2.3.5 Performance 2-42
2.2.3.6 Include Provisions for Inspection and Testing 2-43
2.2.3.7 Enable Demonstration of Energy Products and Processes 2-43
2.2.3.8 Plant and Fuel Acquisition 2-44
2.2.3.9 Operation and Training 2-44
2.2.3.10 Quality and Configuration Management Requirements 2-44
2.2.3.11 Environmental Requirements 2-45
2.2.3.12 FERC Requirements 2-46

2.3 FUTURE STUDIES **2-47**

2.3.1 CONSOLIDATE REFERENCE TOP LEVEL REQUIREMENTS 2-47

2.3.2 APPLICATIONS STUDY 2-47

2.3.2.1 Oil Sands (OS) Applications 2-47
2.3.2.2 Enhanced Oil Recovery (EOR) Applications 2-48
2.3.2.3 Steam Methane Reforming (SMR) Application 2-48
2.3.2.4 High Temperature Steam Electrolysis (HTSE) Application 2-48
2.3.2.5 Coal-to-Gas (CTG) and Coal-to-Liquids (CTL) Applications 2-49
2.3.2.6 Integrated Demonstration Strategies 2-49
2.3.2.7 Develop Enveloping Top Level Requirements 2-49

REFERENCES 2-50

LIST OF ASSUMPTIONS 2-52

APPENDICES 2-53

APPENDIX 2A FINAL DESIGN REVIEW PRESENTATION TO BEA 2-53

LIST OF TABLES

Table 2.1-1: Market Needs and Opportunities for PBMR H2 PHP Deployment 2-17
Table 2.1-2: PBMR H2 PHP Development Strategy 2-18
Table 2.2-1: Summary Characteristics of the INL Site [2-11] 2-23
Table 2.2-2: Commercial PBMR PHP NHSS Site Parameter Envelope 2-24
Table 2.2-3: NHSS Design Duty Cycles 2-28

LIST OF FIGURES

Figure 2-1: Requirements Flow Down to Design (PCDR Sections Noted)..... 2-11
Figure 2.1-1: Commercial PBMR H2 PHP Concept 2-12
Figure 2.2-1: Reference Impact Force Function 2-27
Figure 2.2-2: Reference Shock Pressure Wave..... 2-27

2 TOP LEVEL REQUIREMENTS

SUMMARY AND CONCLUSIONS

The top-level requirements for the Pebble Bed Modular Reactor (PBMR) Process Heat Plant (PHP)-based Next Generation Nuclear Plant (NGNP) Project presented herein provide design, licensing and mission-specific requirements for the NGNP to serve as the demonstration plant for follow-on multi-module commercial plants. While NGNP Project emphasis is on hydrogen production, the commercial PBMR Process Heat Plant (PBMR PHP) will supply nuclear-generated process heat for a broad range of applications. These top level requirements draw from and consolidate information from the following sources:

- Recent NGNP Public/Private Partnership Working Group perspectives and plans for a NGNP Alliance of end-users to support Project development and drive deployment.
- Department of Energy (DOE) guidance via the Idaho National Laboratory/Battelle Energy Alliance (INL/BEA) issued NGNP related Project Management Plan, High-Level Functions and Requirements (as modified by the Independent Technology Review Group (ITRG) report), and Statement of Work documents, plus related DOE requirements associated with the NGNP being a DOE-owned facility on a DOE site.
- User requirements from past utility/user groups engaged with High-Temperature Gas-Cooled Reactor (HTGR) development as well as with Advanced Light Water Reactor (ALWR) design and certification efforts. Such efforts have also served to provide a user perspective on the commercial PBMR PHP market incentives, needs, opportunities and development strategy.
- Utility/user requirements and experience from the PBMR Demonstration Power Plant (DPP) Project in South Africa.
- Ongoing user interactions with PBMR process heat project initiatives.
- Ongoing regulatory experience in the US and South Africa, which builds upon the decades of experience in the US, Germany and elsewhere.
- Special Studies and analyses conducted by the PBMR-based team at the front-end of the preconceptual design and engineering services contract that have served to establish key plant design features.

From all the above, a summary of key top level requirements for the PBMR PHP-based NGNP Project follows:

- The NGNP Project shall develop, license, build, test and operate a one module PBMR PHP as a demonstration for subsequent multi-module commercial plants.
- The NGNP Project shall support the timely Design Certification (DC) of the standard Nuclear Heat Supply System (NHSS) suitable for a broad range of applications and envelope of site conditions.

- The NGNP Project shall develop, permit, build, test and operate a reference hydrogen process at the full commercial train scale as a demonstration for multi-train commercial plants.
- The NGNP Project shall also accommodate the demonstration of other advanced hydrogen production processes and process heat applications as well as follow-on advanced fuels, components and systems plus serve to train future operators.

Further development of the top level requirements will be conducted in concert and cooperation with the development of a user-based NGNP Alliance, noted above.

INTRODUCTION

This section presents top-level user, regulatory and mission-specific requirements for the NGNP Project based on the Pebble Bed Modular Reactor Process Heat Plant (PBMR PHP) modular design concept. In the PBMR PHP design, the module is a single Reactor System integrated with a Heat Transport System which comprises the Nuclear Heat Supply System (NHSS). The NHSS delivers nuclear process heat that is applicable for a broad range of applications. For hydrogen production, the premium heat drives a water-splitting based process that is in series with a bottoming Rankine cycle for electricity generation. The reference hydrogen production process selected by the PBMR-based team is the Hybrid Sulfur (HyS) process, but the team remains open if a more attractive process evolves from the ongoing technology development activities. The commercial hydrogen production plant design concept is modular as well and is referred to as the PBMR Process Heat Plant for Hydrogen Production (PBMR H2 PHP).

As the NGNP is the single module demonstration for the commercial plant that is comprised of one or more modules, it is critical that the commercial plant design concept, the profiles of the targeted users, and the user perspective on market incentives, needs, opportunities and development strategy for the commercial plant be addressed (Section 2.1), as they serve as the underlying bases for the user requirements for the NGNP. Note that the content of Section 2.1, as well as this Introduction section, does not contain requirements for the purposes of traceability in the controlled design development process.

The traceable user requirements along with the regulatory and mission-specific traceable requirements are provided in Section 2.2. Such requirements are drawn from past and ongoing efforts by user groups, individual user-driven project development, including the DPP; the regulators; Project mission-specific requirements developed by DOE/INL personnel; plus initial NGNP-based special studies and leading analyses conducted by the PBMR team. Pertinent reference documents from all the above are noted for each NGNP requirement herein.

The sources of these top level requirements for the NGNP Project and the relationship to the Plant Design Requirements and the other sections of this report are illustrated in Figure 2-1. Each of these traceable requirements will flow down to one or more of the 13 standard categories of design requirements in DOE's hierarchy of design control or to the overall Project management control documents.

Note that the further development of the top level requirements will be done in concert and cooperation with the evolving user-based NGNP Alliance. Such an Alliance is envisioned to establish a Public/Private Partnership with the DOE that will drive the NGNP Project [2-1].

All acronyms are defined in PCDR Appendix A.

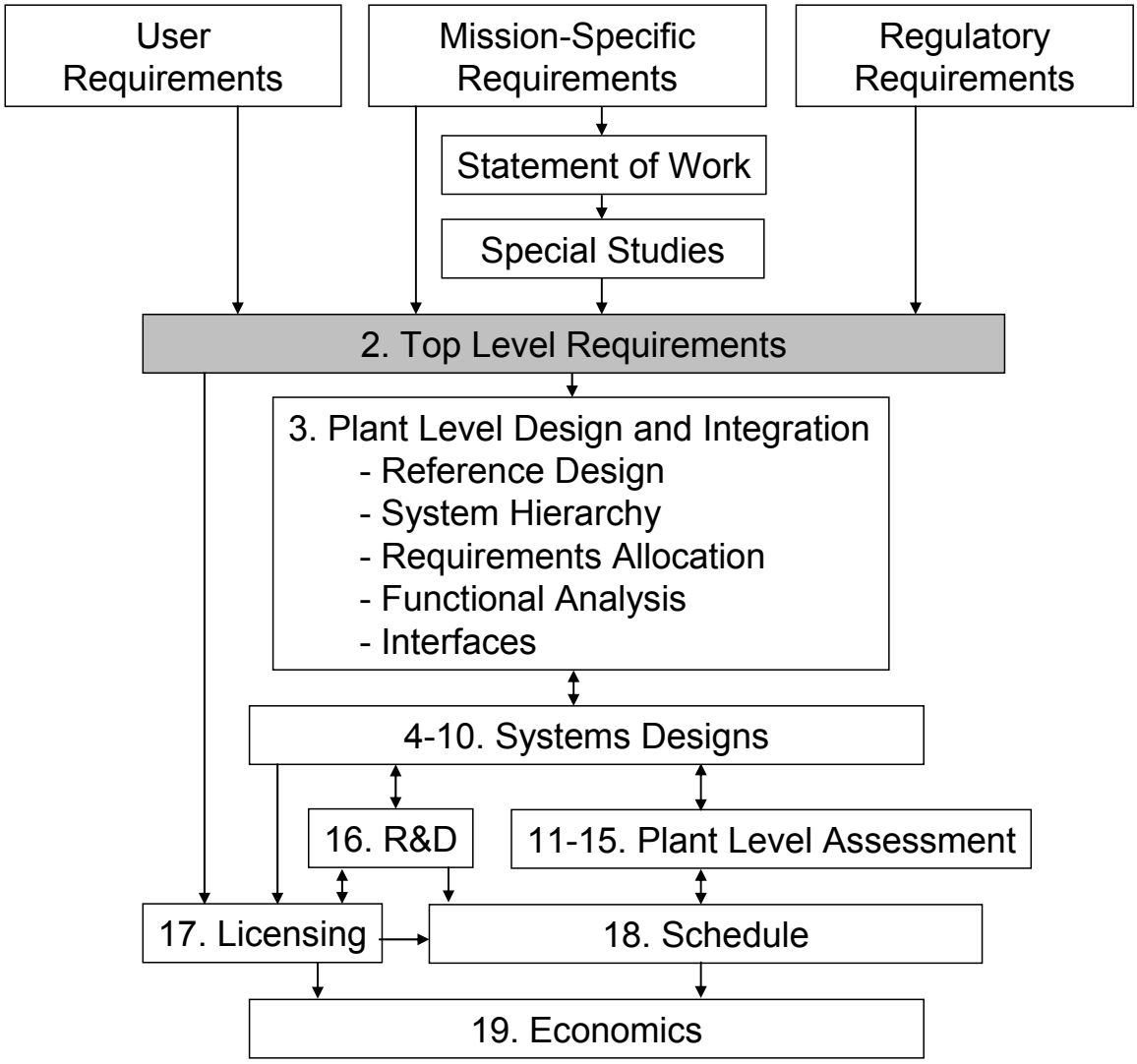

Figure 2-1: Requirements Flow Down to Design (PCDR Sections Noted)

2.1 THE COMMERCIAL PBMR H2 PHP PLANT

2.1.1 Commercial Plant Summary Description

The PBMR H2 PHP commercial design is based on a reactor coolant outlet temperature of 950°C which supplies about 900°C heat energy via an Intermediate Heat Exchanger (IHX) for the production of hydrogen. The IHX and primary helium circulator are located in a pressure vessel adjacent to the reactor pressure vessel. This configuration of the reactor and heat transport systems is termed the Nuclear Heat Supply System (NHSS). A PBMR H2 PHP deploys one or more NHSSs plus additional support systems. The NHSS defines the scope of the design certification envelope to be obtained from the NRC in concert with the NGNP Project.

The NHSS provides process heat to the Hydrogen Production System (HPS) and the electrical Power Conversion System (PCS) based on the Rankine cycle. In the commercial PBMR H2 PHP design, the HPS and PCS designs are integrated to achieve optimal thermal efficiency for hydrogen production. The reference commercial PBMR H2 PHP concept is based on the HyS process and is illustrated in Figure 2.1-1. In addition, the plant control room, warehouses, shop facilities and administrative offices are located in the Balance-of-Plant (BOP) area.

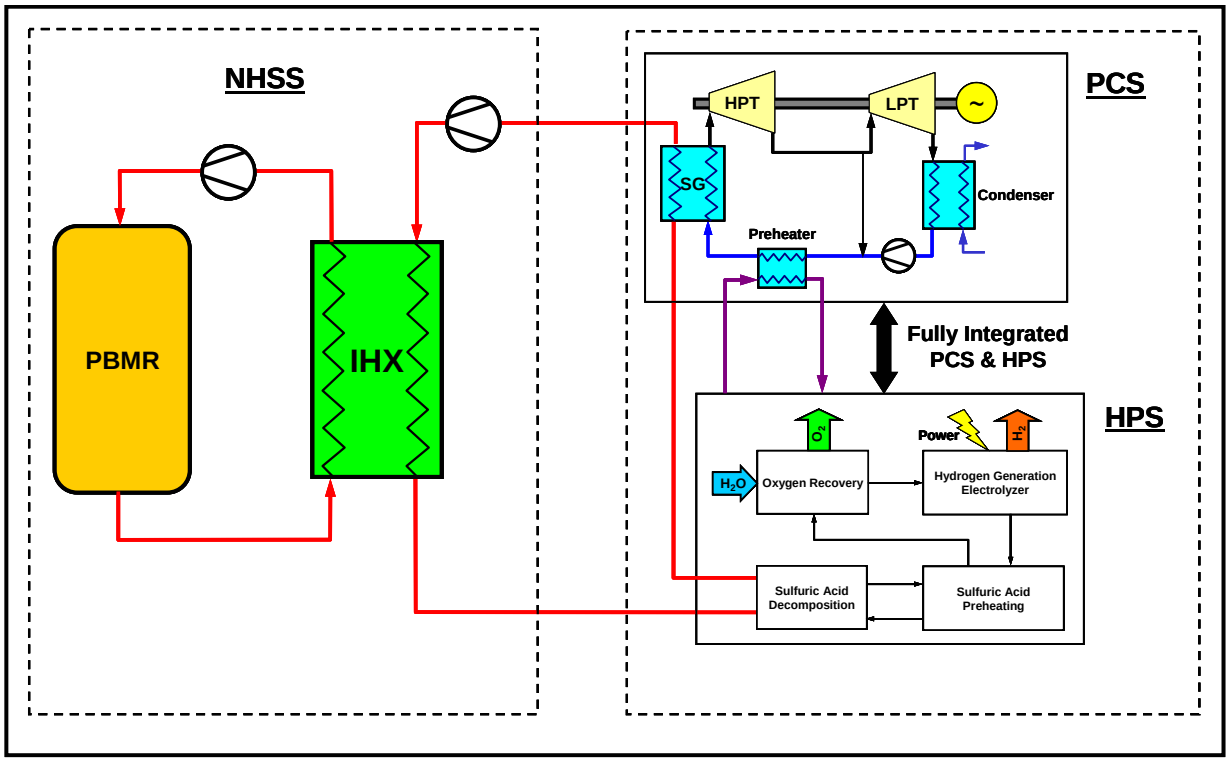

Figure 2.1-1: Commercial PBMR H2 PHP Concept

The HyS process is comprised of three processing stages. The first is the sulfuric acid concentration, preheating and decomposition operations which produce water and gaseous mixtures of SO_2 and oxygen, the second is the separation of a clean O_2 product stream from the SO_2/O_2 mixture coming from sulfuric acid decomposition and dissolving the remaining SO_2 in an anolyte and the third is the electrolysis of the SO_2 and H_2O to produce H_2 and sulfuric acid. The overall net thermal efficiency of the HyS is projected to be about 40% High Heating Value (HHV) for a fully integrated PBMR H2 PHP.

The reference PBMR H2 PHP fuel is TRISO-coated UO_2 fuel particles embedded in the spherical pebble fuel elements. The pebbles are circulated through the core to effect on-line refueling which is compatible with continuous process industries. The fuel cycle adapts Low Enriched Uranium (LEU) to achieve optimal burnup and overall core and fuel performance.

A high degree of safety is achieved without reliance on prompt operator actions and startup of standby equipment by the use of passive design features. The design limits peak fuel temperatures during normal operation and during the long-duration loss of forced circulation accidents such that radionuclide retention within the fuel is maintained.

2.1.2 Profiles of User Stakeholders

The end-users of the PBMR H2 PHP technology include future plant owners, plant operators and hydrogen producers, as well as participants in the hydrogen economy of the future. Profiles of such stakeholder entities are summarized in the following paragraphs [2-1].

Existing, Bulk Hydrogen Producers – The existing bulk hydrogen producers are dominated by industrial gas suppliers and the petrochemical industry, including oil refining, ammonia (fertilizer) production and methanol production. Industrial gas suppliers frequently serve both the large user industries and smaller users such as metals processing and food processing plants. With regard to their role and relationship with PBMR H2 PHPs, most such users are expected to start as purchasers of power and process heat from the PBMR PHP owner/operator entities. As the industry matures, this structure is expected to evolve into joint ventures between such users and the PBMR PHP owner/operator entities that will own and operate the entire PBMR H2 PHP.

Clean Fossil Fuel Process (Heat) Industries – The process heat market is a substantial existing market that presently relies on fossil fuels for energy. In the future, large quantities of process heat and hydrogen will be required to support growth industries in the recovery and processing of heavy oil and oil sand deposits, as well as to support clean coal processes that produce both liquid and gaseous fuels. Early applications for Canadian oil sands recovery and/or processing may serve as an entrée for the broader, and more economically challenging heavy oil and eventual oil shale applications in the U.S. The roles for these clean fossil fuel processing industries in such PBMR PHP-based process plants will be the same as described above for the bulk hydrogen producers, as well as include them.

Electric Utilities – As the traditional owner/operators of nuclear power plants, electric utilities are well positioned to participate in the development of the PBMR H2 PHP User infrastructure. In addition, electric and/or gas utilities with an interest in expanding their service base to include hydrogen supply (as an energy carrier) and/or process heat and/or steam directly to customers are prospective participants. Current nuclear power owner/operators are also candidate merchant plant operators for PBMR-based process heat/hydrogen/cogeneration PHPs owned by others.

Hydrogen Transportation Stakeholders – In the longer-term, the potential for hydrogen-powered vehicles offers an even larger market opportunity for carbon-free PBMR H2 PHPs. As the owner/operator/supplier/user infrastructure matures, oil companies – the major stakeholders in today's petroleum-based liquid fuels – will become candidate stakeholders.

2.1.3 User Incentives for PBMR H2 PHP Deployment

2.1.3.1 High Temperature Process Heat Capability

The high temperature capability of HTGRs is unique among nuclear technologies and offers the potential for emission-free, high temperature process heat for the bulk production of hydrogen and other industrial applications. Bulk hydrogen is needed for upgrading heavy petroleum resources, as a feedstock in ammonia, fertilizer and methanol production, as a reducing agent and oxygen scavenger in non-ferrous metals and float glass production, and for hardening of fats and fatty acids, all of which today rely on the reforming of natural gas. New bulk hydrogen markets are evolving for enhanced oil and oil sands processing, as well as in the production of clean liquid and gas fuels from coal. Accordingly, the PBMR H2 PHP can promote the utilization of indigenous coal and uranium resources and extend domestic oil and gas resources, thereby reducing dependence and costs associated with imported petroleum and natural gas. Utilization of this high temperature nuclear heat source can effectively improve the carbon efficiency of major petrochemical and bulk hydrogen-based complexes. However, this potential will only be realized if the costs and business risks of PBMR H2 PHP ownership are acceptable. The following sections provide insight to the nature of such risks and the approach to their mitigation. [2-5],[2-7]

2.1.3.2 Reduced Risks of Nuclear Plant Ownership

The first generation of Light Water Reactor (LWR) technology dominates and defines commercial power reactor operating experience and regulatory practice in the U.S. and many other countries. The deployment and operation of current LWR plants taxed the management resources of many of the early LWR plant owners. Subsequently, many of these early LWR plants were acquired by entities with the corporate finances, management and operating skill sets needed for efficient operation. For over a decade, virtually every plant has achieved commendable performance, and the fleet has achieved an operating capacity factor of about

90%. The next generation of advanced LWRs in the hands of such entities promises to be the cornerstone of large baseload electricity generation in future decades.

The target market for PBMR H2 PHPs requires the participation of stakeholders that are not corporately rooted in nuclear technology, and for which the early history of nuclear projects represents a significant business risk. The development strategy for the PBMR H2 PHP proposes a combination of technological innovation and design simplification to address those concerns.

The PBMR H2 PHP uses passive safety design features and inherent characteristics to contain fission products at the source of their generation – within ceramic coated fuel particles – for the full range of Licensing basis Events (LBEs). The PBMR H2 PHP safety concept provides an approach to Defense-In-Depth (DID) that allows greater reliance on the first fission product barrier than is possible with current nuclear plants. This design approach ensures public safety from accidents, as well as ample time to plan and implement well-considered recovery measures. It also simplifies the means by which safety functions are accomplished and, consequently, simplifies overall plant design and operational licensing requirements.

Key objectives of the NGNP project are 1) standardization of the NHSS design to a standard envelope of site parameters so that it can be located at the vast majority of candidate process heat user facilities in the global market and 2) early certification of that NHSS design by the NRC following NGNP testing and operation. Achieving these objectives will enable the standard NHSS design to be constructed to nuclear standards without the risk of changing regulations, while the remainder of the plant is designed to meet the requirements of the owner's site and constructed to conventional industrial standards. Further, multiple NHSSs with corresponding process plant systems can be deployed at once, or sequentially, in accordance with the owner's perception of demand growth.

Because of these attributes, the PBMR H2 PHP offers a potential investment opportunity and an attractive option to a broad range of stakeholders who may otherwise view the nuclear option as too demanding and risky.

2.1.4 Competitive Cost and Risk Targets

The target risk profile for the ownership of a mature PBMR H2 PHP is parity with a comparably sized clean coal based plant for hydrogen production that meets the environmental standards and regulations projected for the 2020 timeframe. That is, ownership should entail equivalent institutional resources and pose equivalent financial risks. In this context, the term "equivalent institutional resources" means that approximately the same level of qualified personnel and organizational capability, functioning within similar corporate cultures, is required to successfully procure, license, operate, maintain, and decommission facilities. The term "equivalent financial risks" means that approximately the same level of uncertainty exists for recovering the investment plus an equivalent rate of return on investment, so that investors deem

PBMR H2 PHP financial risks to be on par with clean coal based alternative hydrogen production investment opportunities. The target evaluated mean (or expected) hydrogen production costs for the first series of commercial PBMR H2 PHPs should be competitive with comparably sized clean coal plants (e.g. FutureGen based design [2-18] and [2-19]) that include CO_2 sequestration. In addition, the hydrogen production costs for the first series of commercial PBMR H2 PHPs should be competitive with natural gas-fired Steam Methane Reforming (SMR) plants with current projections of the natural gas price and CO_2 related costs or credits.

2.1.5 User-Based Policy Statements

Policy statements characterize the vision for the commercial PBMR H2 PHPs that guide the user requirements for the NGNP demonstration plant in Section 2.2. Table 2.1-1 and Table 2.1-2 present summary user policy statements on the market needs and opportunities and on the development strategy for PBMR H2 PHP deployment.

Market characteristics are shaped by the needs, attitudes, and risk preferences of market stakeholders; i.e., the public, owner/operators, vendor/suppliers, and investors. Policy statements in this area characterize the attributes needed for the PBMR H2 PHP to provide safe, economic hydrogen supply with acceptable risks in a global market.

Table 2.1-1: Market Needs and Opportunities for PBMR H2 PHP Deployment		
Global Energy Market		The PBMR H2 PHP will be developed to compete in the global energy market as a cost/risk competitive nuclear option acceptable to a broad base of global owners/investors/end-users.
Public Acceptance and Environmental Compatibility		Public acceptance and environmental compatibility will be achieved by eliminating the need to disturb day-to-day public activities with emergency plans and drills or to interrupt the use of offsite land.
Owner/Operator Corporate Culture		The PBMR H2 PHP owner/operator culture will be defined by a competitive commercial environment invested in process heat plants. The stringent safety requirements imposed on the PBMR H2 PHP will be confirmed with minimal oversight of plant management by regulatory authorities.
Nuclear Heat Supply System Standardization		The standard NHSS design, and NRC certification, will provide the flexibility to deploy multiple NHSSs in parallel or sequentially, as desired to meet load growth and/or financing constraints.
Plant and Fuel Procurement		Terms for plant and fuel procurement will include a performance warranty and a fixed price from a commercial vendor entity or entities.
Plant Staff		The operational aspects of the PBMR H2 PHP safety concept will allow the emphasis of plant staff training and work activities to be on process heat supply, hydrogen production and investment protection.
Investment Protection and Investor Acceptance		Investment protection and investor acceptance will be ensured with a conservative plant design deployed by experienced construction and operating entities in a simplified regulatory environment.

Table 2.1-2: PBMR H2 PHP Development Strategy		
Plant Design Simplification		Mechanical and operational simplicity enabled by passive features will be emphasized in all aspects of the plant design, with particular emphasis on the means by which safety functions are accomplished.
Reactor Safety		Defense-in-depth will be established by applying overlapping levels of protection to multiple fission product barriers.
Containment of Radionuclides		Fuel technology and manufacturing QA/QC will ensure reliable fission product containment for the full range of licensing basis events.
Waste Management		Life-cycle cost optimization will include costs for all forms of waste minimization and long-term management in compliance with applicable regulations.
Simplification of Regulatory Requirements		Simplicity in plant design, the means to accomplish safety functions, and the plant safety analysis will allow a simplified, performance-based approach to regulatory requirements.
Licensing		PBMR H2 PHP design and licensing bases will be developed in accordance with the NRC Advanced Reactor Policy Statement and the provisions of 10 CFR Part 52.
Demonstration Testing		Full-scale, integrated testing of the NGNP may be conducted as a supporting element of early commercial plant design certification, owner's investment protection and enhanced public acceptance.
Risk-Informed, Performance Based Regulation		The principles of risk-informed, performance based regulation methodology will be applied in developing regulatory requirements for the PBMR H2 PHP.

2.2 USER, REGULATORY AND PROJECT MISSION REQUIREMENTS FOR THE NGNP

This Section presents the user, regulatory and project mission requirements for the NGNP based on the commercial PBMR H2 PHP. The NGNP uses a full scale NHSS designed for process heat delivery consistent with optimal hydrogen production. For the purposes of demonstration, the commercial PBMR H2 PHP hydrogen production and electricity generation functions are demonstrated in two separate facilities: 1) a Hydrogen Production System (HPS) facility sized for the demonstration of a single train of the multi-train commercial HPS design and 2) a Power Conversion System (PCS) facility sized to utilize the rated output of the NHSS.

Requirements in this section are intended to support the preconceptual design of the NGNP, with emphasis on identifying the critical Structures, Systems and Components (SSC) that are not commercially available or do not have proven industry experience. Requirements are identified in three categories: user, regulatory and mission-specific.

User requirements in Section 2.2.1 are drawn from the PBMR Demonstration Power Plant (PBMR DPP) project, relevant prior U.S. and European gas-cooled reactor programs, plus ALWR programs, including the Electric Power Research Institute (EPRI) and European Utilities Requirement Documents as well as user interactions with ongoing PBMR PHP project development activities. User requirements are organized into overall NGNP, NHSS facility, Hydrogen Production System (HPS) facility and PCS facility requirements.

Regulatory requirements in Section 2.2.2 address federal, state and local (building permits and first-responder guidance) regulations, plus codes and standards for construction of the NGNP at the INL site.

As the precursor to deployment of the commercial PBMR H2 PHP, the NGNP Project will play a critical role in validating related technology and in establishing the regulatory framework necessary to contain the business risks of PBMR H2 PHP plant ownership. These and other Project mission requirements are addressed in Section 2.2.3. Included in this category are special studies and analyses conducted by the PBMR-based team in response to the ongoing preconceptual design and engineering services statement of work that have served to establish key plant design features, reference hydrogen process selection and demonstration strategies.

References for the sources of all such requirements are listed in hierarchical order as multiple references are often applicable. In addition, there are references noted in the following sections as “[PATS]” which mean that the source of the requirement in question will come from a “Pending Analysis or Trade Study”. Similarly, references noted as “[AUTH]” signify that the authors of this document have added the requirement in question in response to reviewer comments or in the interest of logical consistency and clarity. Also, values enclosed in brackets “[ ]” indicate a parameter for interim use subject to reconsideration as more information becomes available. Where an initial value is not available, TBD (To Be Determined) is used.

2.2.1 User Requirements for the NGNP

2.2.1.1 Overall NGNP Design Requirements

2.2.1.1.1 NGNP Mission

- The NGNP shall demonstrate the commercial-scale production of hydrogen from nuclear energy supplied by a PBMR H2 PHP NHSS with a nominal rating of 500 MWt. [2-1],[2-2],[2-3],[2-4],[2-12]
- The NGNP shall support commercial deployment of the PBMR PHP with minimal re-design. [2-1],[2-3]

2.2.1.1.2 NGNP Safety and Licensing

- The NGNP shall be licensed by the Nuclear Regulatory Commission (NRC) with nuclear safety considerations of the whole plant, but with the nuclear safety related requirements limited to the NHSS and related buildings. Hence, nuclear safety and licensing are elaborated in the following NHSS subsection. [2-1],[2-3],[2-4],[2-7]

2.2.1.1.3 NGNP Configuration

- The NGNP shall consist of NHSS, HPS, PCS and BOP facilities.
  - The NHSS shall be full scale and capable of supplying process heat to the HPS and the PCS facilities. [2-2],[2-4]
  - HPS and PCS facilities shall be designed and configured to support the NGNP Project mission (as opposed to optimized systems within an integrated hydrogen production plant). [2-2],[2-4]
  - The PCS shall be capable of utilizing rated NHSS output. [2-4]
  - The HPS shall be capable of demonstrating a commercial-scale Hybrid Sulfur (HyS) hydrogen production process train with a nominal rating of 50 MWt, as well as other thermo-chemical and water splitting hydrogen production process trains. [2-2],[2-3],[2-4],[2-7],[2-17]
  - The BOP systems shall provide common support services to two or more of the NHSS, HPS and PCS facilities, e.g., central control room, warehouses, administration, medical facilities. BOP facilities are not necessarily contiguous. [2-7] [AUTH]
- The NGNP shall be designed to physically separate the NHSS from the HPS, PCS and BOP facilities. The NHSS shall contain all systems, structures and components that are assigned nuclear safety functions. The HPS shall contain the hydrogen production equipment, and the PCS shall contain the electricity generation equipment. [2-7]

- The NGNP NHSS shall be designed, procured and constructed to nuclear standards, while the HPS, PCS and BOP facilities shall be constructed to conventional (non-nuclear) standards. [2-7] [AUTH]

2.2.1.1.4 NGNP Control/Man-Machine Interface

- The central control room for the NGNP shall be located in the BOP. [2-7],[AUTH]
- The central control room shall incorporate features necessary to facilitate start-up, shutdown, monitoring, and control and shall provide for operator shutdown of major systems and components to limit investment risk and protect personnel. [2-7]
- The design of major control systems shall incorporate the means to detect and diagnose internal malfunctions for Anticipated Operational Occurrences (AOOs) and Design Basis Events (DBEs). [2-7]
- Provisions shall be included in the control system design to automatically identify and document the sequence of significant events (e.g., control inputs, changes in the operational state of major systems and components, changes in major system parameters, protective trips, etc.) that occur during plant operation. [2-7]
- The design of control systems shall be applicable to commercial plants and therefore shall facilitate the sequential addition of modules and the independent operation of modules at different hydrogen production and/or electric power levels. [2-7] [AUTH]

2.2.1.1.5 NGNP Staffing

- The NGNP shall be designed for a direct staffing level not to exceed [TBD] full-time equivalent people. Allocations to the operations, maintenance, technical, and administrative divisions shall be identified for the NHSS, HPS, PCS and BOP facilities. [2-7] [PATS] [AUTH]

2.2.1.1.6 NGNP Service Life

- The plant shall be designed for an operating life of 60 calendar years from authorization to operate. [2-4],[2-7],[2-8]
- The plant shall be designed to permit replacement of life-limited, and/or failed components over its lifetime. [2-7],[2-8]

2.2.1.1.7 NGNP Reliability & Availability

2.2.1.1.7.1 Capacity Factor

- Excluding NGNP mission-specific outages for inspection and testing, the design capacity factor averaged over the plant lifetime shall be at least [TBD] % when

modeled with equipment mean time to failure and mean time to repair data for the same or similar systems and/or components. [2-4],[2-7],[2-8],[PATS]

2.2.1.1.7.2 Planned Outages

- Excluding NGNP mission-specific outages for inspection and testing, the capacity factor loss due to planned outages averaged over the lifetime of the plant shall not exceed [TBD] %, including all planned inspection and maintenance activities that must be accomplished during shut down. [2-4],[2-7],[2-8],[PATS]

2.2.1.1.7.3 Investment Protection

- Excluding NGNP mission-specific outages for inspection and testing, the calculated capacity factor loss due to unplanned outages averaged over the lifetime of the plant shall not exceed [TBD] %. [2-7],[2-8],[PATS]
- Excluding NGNP mission-specific outages for inspection and testing, unplanned outages of six months or greater shall not contribute more than [10%] of the capacity factor loss from all unplanned outages, including those not expected to occur in an individual plant's lifetime. [2-7],[2-8],[PATS]

2.2.1.1.8 Site-Specific Parameters & External Interfaces

2.2.1.1.8.1 NGNP Site Parameters

- The NGNP shall be designed for INL site conditions listed in Table 2.2-1. See Section 2.2.1.2.1 for additional site requirements that apply to the NHSS. [2-2],[2-4]

2.2.1.1.8.2 External Interfaces

- The site shall provide for the delivery and storage of hydrogen production feedstock including feedstock water, sulfuric acid, catalyst and processing chemicals as well as plant spare parts, replacement electrolytic cells and decomposer elements. [AUTH]

2.2.1.1.9 NGNP Fabrication/Construction

- Advanced techniques, such as the use of factory or field-fabricated and -assembled modules containing portions of systems and/or structures, shall be utilized, as appropriate, to reduce erection costs and schedule risks and to enhance quality control. [2-7],[2-8]

- The design of buildings and equipment shall facilitate plant construction and the installation, repair, and replacement of equipment. [2-7]

2.2.1.1.10 NGNP Decommissioning

- Upon completion of its useful life, the NHSS shall be put into a condition of safe storage for 10 years and then decontaminated and dismantled to allow continued use of the land as a power plant or industrial site. [2-7]

Table 2.2-1: Summary Characteristics of the INL Site [2-11]

Parameter	Value
Soils:	
Depth	0 to 4 ft of alluvium overlying basalt
Static bearing capacity, psf	[TBD]
Soil shear modulus, psf	[TBD]
Water:	
Source	Self charging Snake River Plain aquifer
Depth	475 ft
Quality	[TBD] – see Section 9, Table 9-1
Availability	>30,050 ac-ft/yr
Climatology:	
Avg. air temp (°F)	Annual avg: 42.6; Extreme high: 101; Extreme low: -47
Precipitation, in	Annual high: 14.4; Annual low: 4.5; Annual avg: 9.07
Wind Speeds, mph	
At 20 ft elev.	Annual avg: 7.5; Annual highest: 51
At 250 ft elev.	Annual avg: 51; Annual highest: 67
Tornado (1)	
Annual risk probability	7.8×10^{-5}
Maximum wind speed, mph	175
Tangential velocity, mph	145
Translational, mph	30
External pressure drop	0.65 in at 0.25 psi/sec
Other	
Flooding	No special provisions are required
Seismic (2) (3)	
Site location	Use INL "Power Burst Facility" as surrogate location
Performance category (PC)	PC 1 to 4, DOE-STD-1020-2002, Table 2.1-1
PC 1 and PC 2 SSCs	International Building Code (IBC) 2000
PC 3 and PC 4 SSCs	ICP Architectural Engineering Standards Design Basis Earthquake Parameters (Appendix S)
Volcanic activity	Risk of ash fall must be considered on a site specific basis

Notes for Table 2.2-1.
(1) Design basis tornado values are under review (1989)
(2) Email, V. Balls to P. Wells, RE: Seismic, January 24, 2007
(3) See Section 10: Site, Buildings, and Structures for additional details.

2.2.1.2 NHSS Facility Design Requirements

2.2.1.2.1 NHSS Design Standardization and Certification

- The NHSS shall be designed to nuclear standards for NRC design certification of the standard PBMR PHP NHSS. [AUTH]
- Design, testing, and licensing documentation shall be developed to support design certification of the NHSS that accommodates the multi-module commercial plant configurations and expansion options. [2-7],[AUTH]
- The NHSS design shall envelope the conditions for potential commercial sites listed in Table 2.2-2, as well as INL site conditions in Table 2.2-1. [2-7],[2-8],[AUTH]

Table 2.2-2: Commercial PBMR PHP NHSS Site Parameter Envelope

Site Parameter	Value
MAXIMUM GROUND WATER LEVEL	0.6 m (2 ft) below grade
MAXIMUM FLOOD (OR TSUNAMI) LEVEL	0.3 m (1 ft) below plant grade(1)
PRECIPITATION (for Roof Design))	
• Maximum rainfall rate	493 mm/hr (19.4 in/hr)(2) 157 mm (6.2 in)/5 min.
• Maximum snowload	244 kg/m^2 (50 lb/ft^2)
AMBIENT AIR TEMPERATURES(3)	
• 5% Exceedance Values	
Maximum dry bulb	35°C (95°F)
Maximum wet bulb	25°C (77°F) coincident 26°C (79°F) non-coincident
Minimum	-21°C (-5°F)
• 1% Exceedance Values	
Maximum dry bulb	38°C (100°F)
Maximum wet bulb	25°C (77°F) coincident 27°C (80°F) non-coincident
Minimum	-21°C (-10°F)
• 0% Exceedance Values	
Maximum dry bulb	46°C (115°F)
Maximum wet bulb	27°C (80°F) coincident 27°C (81°F) non-coincident
Minimum	-40°C (-40°F)
• Values for Economic Assessments	
Mean	16°C (60°F dry bulb) 11°C (52°F wet bulb)
WATER SOURCE	[TBD] spec for hydrogen production and Rankine cycle cooling

Table 2.2-2: Commercial PBMR PHP NHSS Site Parameter Envelope

Site Parameter	Value
SITE ELEVATION	
● Range for Design	0 –1830 m (0 – 6000 ft) above mean sea level
● Mean for Economic Evaluations	30 m (100 ft) above mean sea level
EXTREME WIND	
● Basic wind speed	177 km/hr (110 mph)(4)
● Importance factors	1.0(5)/1.11(6)
TORNADO (7)	
● Maximum Tornado Wind Speed	483 km/hr (300 mph)
● Maximum Rotational Speed	386 km/hr (240 mph)
● Maximum Translational Speed	97 km/hr (60 mph)
● Radius of Maximum Rotational Speed	46 m (150 ft)
● Maximum Pressure Drop	14 kPa (2.0 psi)
● Rate of Pressure Drop	8.3 kPa/s (1.2 psi/s)
● Missile Spectra	Spectrum A of SRP 3.5.1.4
SOIL PROPERTIES(8)	
● Minimum Bearing Capacity (static)	≥ 73,000 kg/m^2 (15,000 lb/ft^2)
● Minimum Shear Wave Velocity	≥ 305 m/s (1000 ft/s)
● Liquefaction Potential	None (at site-specific SSE)
SEISMOLOGY(9)	
● Reference SSE PGA(10)	[0.3 g(11)(12)]
● SSE Design Response Spectra	[Reg Guide 1.60 (13)]
● SSE Time History	[Envelope SSE Response Spectra]
● Seismic Margin Evaluation Level	[0.5 g]
● Plant Shutdown Evaluation Level	[0.1 g]
SITE BOUNDARIES	
● Exclusion Area Boundary	425 m (0.26 mi) from reactor release
● Low Population Zone	425 m (0.26 mi) (same as EAB)
● Inhalation Emergency Planning Zone	425 m (0.26 mi) (same as EAB)
● Ingestion Emergency Planning Zone	[TBD] (14)
ATMOSPHERIC DISPERSION (X/Q) (sec/m^3)	[TBD]

Notes for Table 2.2-2

(1) Probable maximum flood (PMF) level, as defined in American National Standards/ (ANSI/ANS 2.8-1983, Determining Design Basis Flooding at Power Reactor Sites. Minimum value to be basis of standard plant design with provisions for accommodation of flood levels up to maximum value.

(2) Probable maximum precipitation (PMP) for a one hour interval for 1 square mile. The PMP for a five minute interval applies a factor of 0.32 in accordance with the National Weather Service Publication HMR No. 52.

(3) The 5%, 1% and 0% ambient air temperature exceedance values are intended for use in the design of structures, systems and components that serve safety and investment protection

functions.

(4) 50-year recurrence interval. At and above a height of 10 m (33 ft) above grade per ASCE 7-88, July 1990, Category III.

(5) Importance factor to be used for non-safety-related structures per ASCE 7-88, July 1990.

(6) Importance factor to be used for safety-related structures per ASCE 7-88, July 1990.

(7) 1,000,000-year tornado recurrence interval with associated parameters based on ANSI/ANS 2.3, 1983.

(8) Values of bearing capacity and shear wave velocity are included in this table to assure the plant can be located on a wide variety of soil types.

(9) The seismic methodology and parameters cited here are "legacy" provisions circa 1995 to provide interim guidance pending completion of the broader effort within the nuclear industry to more fully utilize probabilistic methods.

The seismic accelerations cited pertain to the design of safety-related structures, systems, and components (SSCs).

(10) SSE PGA = Safe Shutdown Earthquake Peak Ground Acceleration

(11) Free-field at plant grade elevation.

(12) Envelopes all present U.S. nuclear sites except those on the California coastline.

(13) NRC Regulatory Guide 1.60

(14) Appropriate requirements for limiting the disturbance of offsite crops, livestock, etc., will be established. An effort is required to develop criteria and screen the options (e.g., size of the ingestion pathway EPZ, design modifications, etc.)

2.2.1.2.1.1 Special External Events

- The NHSS design shall accommodate the reference aircraft impact, defined below, within the provisions of Section 2.2.2.1.4, Top Level Regulatory Criteria (TLRC) Related to Beyond Design Basis Event (BDBE). [2-7], [2-9], [AUTH]

Weight of impacting body:	**[20,000 kg (44,000 lb)]**
Speed of impacting body:	[215 m/s (705 ft/s)]
Impact angle coefficient (speed coefficient):	[0.7]
Equivalent diameter of the impact for penetration evaluations:	[2.6 m (8.5 ft)]
Impact surface:	[7 m^2 (75 ft^2)]
Loading Function:	[See Figure 2.2-1]

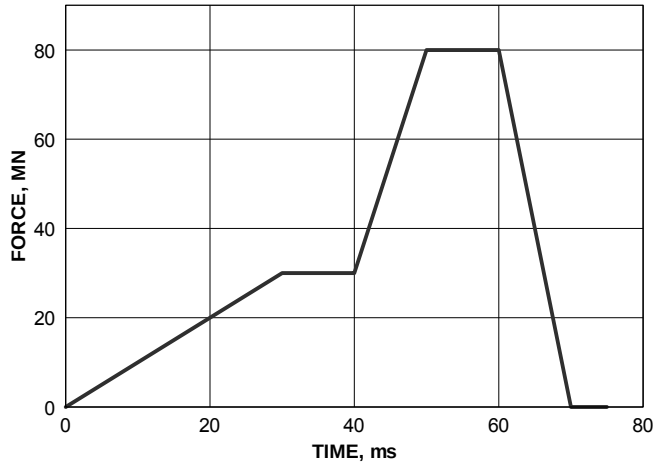

Figure 2.2-1: Reference Impact Force Function

- The NHSS design shall accommodate the reference external detonation shock pressure wave, defined in [Figure 2.2-2], within the provisions of Section 2.2.2.1.4, TLRC Related to BDBE. [2-7],[2-9],[AUTH]

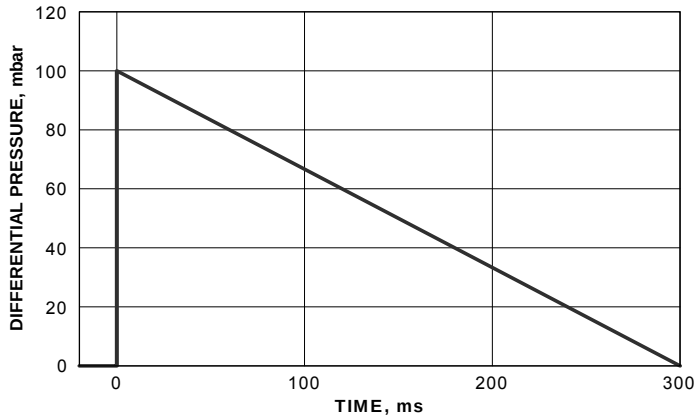

Figure 2.2-2: Reference Shock Pressure Wave

2.2.1.2.1.2 Seismic Design

Seismic design provisions are currently undergoing major revision within the nuclear industry to more fully embody probabilistic methods. The "legacy" provisions below have been retained for the present to communicate intent and provide interim design guidance pending completion of the revision.

- The NHSS shall be designed for a reference safe shutdown earthquake (SSE) horizontal Peak Ground Acceleration (PGA) of 0.3g. [2-7],[2-8]

- The NHSS shall be designed such that the minimum level at which a shutdown is required to evaluate the condition of the plant following an earthquake shall be 0.1g PGA. [2-7],[2-8]
- The NHSS design shall accommodate a seismic margin earthquake (SME) based on the Nuclear Regulation NUREG/CR-0098 median shape curve anchored to a 0.5g PGA. A Seismic Margin Assessment (SMA) shall be performed to demonstrate that there is such seismic margin in the NHSS beyond the design level Safe Shutdown Earthquake (SSE). [2-7],[2-8]

2.2.1.2.2 NHSS Parameters and Performance

- The NHSS design shall be a full scale demonstration of the commercial PBMR NHSS design which uses helium as the heat transfer medium in both the primary and secondary loops and has a nominal rating of about 500 MWt. [2-1],[2-2],[2-4],[2-12],[2-13]
- The NHSS design shall accommodate the commercial PBMR PHP plant lifetime design duty cycle shown in Table 2.2-3. [2-10]

Table 2.2-3: NHSS Design Duty Cycles

Event	Number of Events Per Production unit
Start-up from cold conditions	[240]
Shutdown to cold conditions	[240]
Load rejection	[25]
Rapid load ramp	[500] down
Step load changes (±10%)	[500] (down)

(1) Numbers shown in brackets are subject to revision, pending further analysis.

(2) The NHSS shall be capable of continued stable operation after rapid load ramps and step load changes

2.2.1.2.3 NHSS Configuration

- Within the constraints of its mission, the NHSS shall be designed as the commercial PBMR NHSS, and therefore: [2-1],[2-2],[2-4]
  - The NHSS design shall accommodate plant expansion and new unit startup from an initial configuration of one or more NHSSs without interfering with production operations already in service. [2-7]
  - The NHSS shall be capable of operating independently (i.e., in the commercial plant, the operating status of one NHSS shall not affect the operating status of other NHSSs). [2-7]

2.2.1.2.4 NHSS Fuel

2.2.1.2.4.1 Fuel Cycle

- The fuel design is the same as developed for the PBMR DPP wherein TRISO-coated UO_2 fuel particles are embedded in spherical graphite elements or "pebbles". [2-1], [2-3],[2-4],[AUTH]
- The fuel cycle shall adapt LEU to achieve optimum burnup plus overall core and fuel performance. [2-4],[2-7]

2.2.1.2.4.2 Fuel Handling, Storage and Waste

- The fuel handling system design is the same as developed for the PBMR DPP wherein fuel pebbles are circulated through the core to effect on-line refueling. [AUTH]
- The initial capacity of the spent fuel storage facility shall be consistent with the design fuel cycle and adequate to store spent fuel from 10 years of plant operation, plus one full core. [2-7]
- The design of the spent fuel storage facility shall facilitate expansion without disrupting hydrogen production and electricity generation. [2-7]
- The NHSS design shall be such that the volume of low level radioactive dry and wet waste, as shipped off-site, shall be less than [TBD] m^3 annually. [2-7],[PATS]

2.2.1.2.5 NHSS Safety & Licensing

2.2.1.2.5.1 Safety and Licensing Design Basis

- The NHSS shall be designed in accordance with the generic top-level, nuclear regulatory criteria that are direct and quantitative measures of nuclear-related risks and consequences, plus all applicable governmental codes and regulations. [2-7]

- The NHSS shall meet the top-level regulatory criteria without credit for sheltering or evacuating the public beyond the plant's exclusion area boundary, with the intended result that the Emergency Planning Zone (EPZ) is limited to the Exclusion Area Boundary (EAB). [2-7]
- The NHSS shall meet the top level regulatory criteria without reliance on prompt operator action, the control room or its contents, including the automated plant process control system, or on auxiliary power supplies (other than batteries). [2-7]
- Design requirements supporting safety and licensing objectives, that are incremental to those employed in conventional power plant design, construction, operation and maintenance and quality assurance practices, shall be developed using the principles of risk-informed, performance-based regulation. [2-4],[2-7],[2-15]
- The NHSS shall be equipped with provisions to safely shutdown the reactor in the unlikely event the central control room becomes uninhabitable. [2-7],[2-8]

2.2.1.2.5.2 Testing to Support Licensing

- The plant commissioning shall include testing to support NRC issuance of a full power operating license for the NGNP, plus the Design Certification of follow-on commercial PBMR PHPs. [2-15]

2.2.1.2.5.3 Occupational Radiation Exposure Control

- The NHSS shall be designed so that a minimum number of personnel are exposed to ionizing radiation and the aggregate occupational radiation dose can be maintained below [TBD] person-rem/GWt-year averaged over the life of the plant. [2-7],[PATS]
- The incremental capital cost to be used for radiation dose reduction design evaluations shall be $[TBD] per person-rem/year of avoided exposure. [2-7],[PATS]

2.2.1.2.6 NHSS Reliability & Availability

2.2.1.2.6.1 Capacity Factor

- Excluding NGNP mission-specific outages for inspection and testing, the NHSS design capacity factor for supplying process heat averaged over the plant lifetime shall be at least [TBD] % when modeled with equipment mean time to failure and mean time to repair data for the same or similar systems and/or components. [2-4], [2-7],[2-8],[PATS]

2.2.1.2.6.2 Planned Outages

- Excluding NGNP mission-specific outages for inspection and testing, the capacity factor loss due to NHSS planned outages averaged over the lifetime of the plant shall not exceed [TBD] %, including all planned inspection and maintenance activities that must be accomplished with the reactor shut down. [2-4],[2-7],[2-8],[PATS]

2.2.1.2.6.3 NHSS Investment Protection

- Excluding NGNP mission-specific outages for inspection and testing, the calculated capacity factor loss due to unplanned NHSS outages averaged over the lifetime of the plant shall not exceed [TBD] %. [2-7],[2-8],[PATS]
- Excluding NGNP mission-specific outages for inspection and testing, unplanned NHSS outages of six months or greater shall not contribute more than [10%] of the capacity factor loss from all unplanned outages, including those not expected to occur in an individual plant's lifetime. [2-4],[2-7], [PATS]

2.2.1.2.7 NHSS Maintenance & In-Service Inspection

2.2.1.2.7.1 NHSS Maintenance Requirements

- The NHSS design shall include provisions for monitoring equipment status, configuration, and performance and for detecting and diagnosing malfunctions as a basis for predictive maintenance plans and decision making. [2-4],[2-7],[2-8]
- The NHSS shall be designed to allow all active components and heat exchangers within the helium pressure boundary to be removed and reinstalled to make possible inspection, repair and replacement. [2-7]

2.2.1.2.7.2 NHSS In-Service Inspection

- The design shall provide access to the primary and secondary loop pressure boundary to permit in-service inspection as required by appropriate sections of the ASME Boiler and Pressure Vessel (ASME B&PV) Code. [2-7],[2-8]

2.2.1.3 HPS Facility Design Requirements

2.2.1.3.1 HPS Parameters and Performance

- The HPS shall receive process helium from the NHSS at about 900°C and utilize heat at a rate of up to 50 MWt in the production of hydrogen via the HyS process. [2-3], [2-4],[2-16],[2-17]
- HPS process efficiency shall be about [40] % HHV. [PATS]
- The HPS design shall accommodate the following duty cycle. [PATS] [LATER]

2.2.1.3.2 HPS Configuration

- The HPS facility shall be separated from the NHSS consistent with commercial plant economic and risk tradeoffs. [AUTH]
- The interfaces between the HPS and the NHSS shall be designed to ensure that failures or upset conditions in the HPS do not result in failures or adverse impacts to the NHSS. [2-4]
- The HPS facility shall provide for storage of feedstock, e.g., water, and makeup chemicals such as sulfuric acid. [AUTH]
- The HPP shall include all necessary pretreatment or conditioning of readily available raw materials needed for the process (e.g. water treatment). [AUTH]
- Hydrogen produced in the HPS shall be distributed by pipeline. [AUTH]
- The hydrogen delivery pressure shall be 41.5 bar (600 psig). [AUTH]
- No central storage is included at the hydrogen production plants other than buffer storage, as required for efficient operations. [AUTH]
- The hydrogen product gas shall have purity levels consistent with SAE J2719 standard for hydrogen vehicular applications. [AUTH]
- The interface system between the NHSS and the HPS shall be designed to ensure that tritium migration into the HPS will be limited, such that the maximum amount of tritium released from the integrated NHSS facilities or found in drinking water does not exceed Environmental Protection Agency (EPA) standards. [2-4],[AUTH]
- The total concentration of radioactive contaminants in the hydrogen product gas and associated hydrogen production systems shall be minimized to ensure that worker and public dose limits do not exceed NRC regulatory limits required for monitoring. [AUTH]
- The oxygen byproduct gas shall have purity levels consistent with current industry standards for bulk oxygen applications. Provisions shall be included for the purification, cooling and venting or shipping of the oxygen byproduct. [AUTH]

2.2.1.3.3 HPS Waste

- The HPS design shall be such that the volume of waste shipped off-site shall be less than [TBD] m^3 annually. [2-16],[PATS]
- A means of disposing (such as flaring) of out-of-specification hydrogen product during upsets or startup/shutdown shall be included. [AUTH]

2.2.1.3.4 HPS Safety & Licensing

- The hydrogen production facilities, including the conversion, storage, and distribution systems, shall comply with the requirements of 29 CFR 1910.103, Occupational Safety and Health Standards (OSHA), Subpart H - Hazardous Materials, Hydrogen. [2-4]
- In the event that the HPS facility also produces and stores significant quantities of oxygen, the requirements of 29 CFR 1910.104, Oxygen, shall be applied. [2-4]
- The design, operation and maintenance of the HPS shall comply with 29CFR 1910.119, "Process Safety Management of Highly Hazardous Chemicals". [2-4]

2.2.1.3.5 HPS Reliability & Availability

2.2.1.3.5.1 Capacity Factor

- Excluding NGNP mission-specific outages for inspection and testing, the HPS design capacity factor for hydrogen production averaged over the plant lifetime shall be at least [TBD] % when modeled with equipment mean time to failure and mean time to repair data for the same or similar systems and/or components. [2-4],[PATS]

2.2.1.3.5.2 Planned Outages

- Excluding NGNP mission-specific outages for inspection and testing, the capacity factor loss due to HPS planned outages averaged over the lifetime of the plant shall not exceed [TBD] %, including all planned inspection and maintenance activities that must be accomplished with the HPS shut down. [2-4],[PATS]

2.2.1.3.5.3 HPS Investment Protection

- Excluding NGNP mission-specific outages for inspection and testing, the calculated capacity factor loss due to unplanned HPS outages averaged over the lifetime of the plant shall not exceed [TBD] %. [2-4],[PATS]

2.2.1.3.6 HPS Maintenance & In-Service Inspection (ISI)

2.2.1.3.6.1 HPS Maintenance Requirements

- The HPS shall be designed to allow all components to be removed and reinstalled to make possible inspection, repair and replacement. [2-7],[AUTH]
- The HPS design shall include provisions for monitoring equipment status, configuration, and performance and for detecting and diagnosing malfunctions as a basis for predictive maintenance plans and decision making. [2-7],[AUTH]
- The plant design shall provide storage facilities for an adequate amount of spare parts as determined by a preventive maintenance and facility availability plan. [AUTH]

2.2.1.3.6.2 HPS In-Service Inspection

- The HPS design shall provide access to the pressure boundary to permit in-service inspection as required by appropriate sections of the ASME B&PV Code. [2-7], [AUTH]

2.2.1.4 PCS Facility Design Requirements

2.2.1.4.1 PCS Parameters and Performance

- In full electricity generation mode, the PCS shall receive process helium from the NHSS at about 900°C and utilize the rated capacity of the NHSS in the generation of electricity via a Rankine cycle. [2-13],[2-3],[2-14],[PATS]
- In rated hydrogen production (cogeneration) mode, the PCS shall receive process helium from the HPS at about [700]°C and utilize up to about 450 MWt in the generation of electricity via a Rankine cycle. [2-3],[2-14]
- The PCS cycle efficiency shall be about [36] %. [2-3],[2-14]
- The PCS design shall accommodate the following duty cycle [Later]. [PATS]

2.2.1.4.2 PCS Configuration

- The PCS facility shall be separated from the NHSS in a manner consistent with commercial plant economic and risk tradeoffs. [AUTH]
- A steam generator shall receive process helium and supply steam to a conventional turbine-generator-condenser system that is decoupled from the HPS. [2-14],[AUTH]

2.2.1.4.3 PCS Reliability & Availability

2.2.1.4.3.1 Capacity Factor

- Excluding NGNP mission-specific outages for inspection and testing, the PCS design capacity factor for electricity generation averaged over the plant lifetime shall be at least [TBD] % when modeled with equipment mean time to failure and mean time to repair data for the same or similar systems and/or components. [2-7],[2-14],[PATS]

2.2.1.4.3.2 Planned Outages

- Excluding NGNP mission-specific outages for inspection and testing, the capacity factor loss due to PCS planned outages averaged over the lifetime of the plant shall not exceed [TBD] %, including all planned inspection and maintenance activities that must be accomplished with the PCS shut down. [2-7],[2-14],[PATS]

2.2.1.4.3.3 PCS Investment Protection

- Excluding NGNP mission-specific outages for inspection and testing, the calculated capacity factor loss due to unplanned PCS outages averaged over the lifetime of the plant shall not exceed [TBD] %. [2-7],[2-14],[PATS]

2.2.1.4.4 PCS Maintenance & ISI

2.2.1.4.4.1 PCS Maintenance Requirements

- The PCS shall be designed to allow all components to be removed and reinstalled to make possible inspection, repair and replacement. [2-7],[AUTH]
- The PCS design shall include provisions for monitoring equipment status, configuration, and performance and for detecting and diagnosing malfunctions as a basis for predictive maintenance plans and decision making. [2-7],[AUTH]

2.2.1.4.4.2 PCS In-Service Inspection

- The PCS design shall provide access to permit in-service inspection as required by appropriate sections of the ASME B&PV Code. [2-7],[AUTH]

2.2.2 Regulatory Requirements for the NGNP

2.2.2.1 Federal Regulatory Requirements [2-6]

2.2.2.1.1 Top Level Regulatory Criteria

- The NGNP project shall use a risk-informed, performance-based approach to regulatory decision-making.
- The following primary resources shall be used to develop Top-Level Regulatory Criteria (TLRC) appropriate for the NGNP to establish limits on the risk or consequences of potential radiological releases.
  - Reactor Safety Goal Policy Statement (51 CFR 28044): This policy limits public safety risk resulting from nuclear power plant operation. Limits are stated in the form of the maximum allowable risk of immediate death and the risk of delayed mortality from exposure to radiological releases of all types from nuclear power plants.
  - 10 CFR Part 20, "Standards for Protection against Radiation (Subpart D, Radiation Dose Limits for Individual Members of the Public)": These criteria limit the dose consequences of releases associated with relatively high frequency events that occur as part of normal plant operations.
  - 10 CFR Part 50, Appendix I, "Numerical Guides for Design Objectives and Limiting Conditions for Operation to Meet the Criterion "As Low as is Reasonably Achievable" for Radioactive Material in Light-Water-Cooled Nuclear Power Reactor Effluents": This Appendix provides explicit limits on doses from planned discharges that meet the NRC's definition of "as low as is reasonably achievable".
  - 40 CFR Part 190, "Environmental Radiation Protection Standards for Nuclear Power Operations": These standards provide the generally applicable exposure limits for members of the general public from all operations except transportation and disposal or storage of spent fuel associated with the generation of electrical power by nuclear power plants.
  - 10 CFR Part 100, "Reactor Site Criteria (Subpart B, Evaluation Factors for Stationary Power Reactor Site Applications on or After January 10, 1997)": §100.20 defines the Exclusion Area Boundary and Low Population Zones of a nuclear reactor site, and requires that the combination of the site and reactor located on that site be capable of meeting the dose and dose rate limitations set forth in 10 CFR §50.34(a).
  - 10 CFR §50.34(a)(ii)(D), "Contents of Applications: Technical Information (Radiological Dose Consequences)": This section of the regulation specifies dose limits for evaluating the acceptance of the engineered safety features that are intended to mitigate the radiological consequences of accidents. These dose limits are consistent with those utilized in 10 CFR Part 100 for determining the extent of the EAB and EPZ.

2.2.2.1.2 TLRC Related to Anticipated Operational Occurrences

- Appendix A to 10 CFR Part 50 shall be interpreted to define Anticipated Operational Occurrences (AOOs) as "those conditions of normal operation expected to occur one or more times during the life of a nuclear power plant". AOOs shall be interpreted to include all events of frequency less than 1.0×10^{-2} per plant year.
- The NGNP NHSS shall be designed to meet the more restrictive of the following offsite doses to the public:
  - The annual dose equivalent to a member of the general public from planned uranium fuel cycle operations shall be <25mrem to the whole body, <75mrem to the thyroid, and <25mrem to any other organ. (EPA: 40 CFR §190.10(a))
  - The Total Effective Dose Equivalent (TEDE) for a member of the public shall be limited to 100mrem per year and 2mrem in any one hour, in unrestricted areas. (NRC: 10 CFR §20.1301.)
- Dose, dose rate limits and limits on planned releases from operation of NGNP radwaste systems during normal operation shall maintain exposures As Low As Reasonably Achievable (ALARA). (NRC: 10 CFR Part 50, Appendix I). Such ALARA limits shall be interpreted to mean less than 10% of limits imposed by 10 CFR Part 20.

2.2.2.1.3 TLRC Related to Design Basis Events

- The design, construction and operation of the NGNP NHSS shall be such as to produce an "extremely low probability of occurrence" for accidents that could release significant quantities of radioactive fission products. (NRC: 10 CFR §50.34(a)(i)(2)). Design Basis Events (DBEs) shall be interpreted to include all events of frequency less than 1.0×10^{-2} and greater than 1.0×10^{-4} per plant year.
- The NGNP NHSS shall be designed to meet the following criteria for offsite doses to the public (10 CFR §50.34(a)(1)):
  - An individual located at any point on the EAB shall not receive a radiation dose in excess of 25rem TEDE for any two hour period following the onset of a postulated fission product release.
  - An individual located at any point on the outer boundary of the Low Population Zone (LPZ), exposed to the radioactive cloud resulting from a postulated fission product release, shall not receive a radiation dose in excess of 25 rem TEDE.

2.2.2.1.4 TLRC Related to Beyond Design Basis Events

- The design, construction and operation of the NGNP NHSS for events less frequent than AOOs and DBEs shall achieve a standard of safety superior to that characterized by the qualitative safety goals and quantitative objectives expressed by the NRC (*Safety Goals for the Operations of Nuclear Power Plants*). Such events shall be

termed Beyond Design Basis Events (BDBEs) and occur at frequencies less than 1.0×10^{-4} per plant year and greater than 5.0×10^{-7} per plant year.

- The qualitative safety goals for NGNP NHSS design for BDBEs shall be as follows:
  - Individual members of the public should be provided a level of protection from the consequences of nuclear power plant operation such that individuals bear no significant additional risk to life and health.
  - Societal risks to life and health from nuclear power plant operation should be comparable to or less than the risks of generating electricity by viable competing technologies and should not be a significant addition to other societal risks.
- The quantitative health objectives for NGNP NHSS design for BDBEs shall be as follows:
  - The risk to an average individual in the vicinity of a nuclear power plant of prompt fatalities that might result in reactor accidents should not exceed one-tenth of one percent (0.1 percent) of the sum of prompt fatality risks resulting from other accidents to which members of the U.S. population are generally exposed.
  - The risk to the population in the area near a nuclear power plant of cancer fatalities that might result from nuclear power plant operation should not exceed one-tenth of one percent (0.1 percent) of the sum of cancer fatality risks resulting from all other causes.

2.2.2.2 State and Local Regulatory Requirements

- The Plant Designer shall identify and meet all state and local requirements that are dependent on plant siting, i.e. site specific. It is incumbent on the designers to assure that the system design is such that it facilitates conformance with all state and local requirements and the overall NHSS requirements to maintain standardization. [2-8]

2.2.2.3 Codes and Standards

- The design of the NGNP shall comply with all applicable federal, state, and local codes and standards. Codes and standards pertinent to the nuclear industry shall only be utilized in the design, fabrication and installation of structures, systems and equipment where such codes and standards are applicable. The Plant Designer shall list all applicable codes and standards, and the applicable revision of each document. [2-8]
- NUREG/CR-5973 should be used as a starting point for the identification of codes and standards to be followed during preconceptual design. [2-4]
- Since the NGNP will be built within a DOE facility, and will interface with other existing facilities, the Plant Designer must evaluate DOE Orders to ensure that the NGNP can interface with the DOE Site and be acceptable to the DOE. [2-4]

2.2.3 NGNP Project Mission Requirements

The requirements in this section were adapted primarily from the "Next Generation Nuclear Plant High-Level Functions and Requirements," [2-4] by INL and incorporate appropriate recommendations from the Independent Technology Review Group (ITRG). Content has been adapted as deemed appropriate for the commercial orientation of candidate stakeholders and for the extension of PBMR DPP technology via the NGNP. These requirements complement and emphasize guidance for the strategic mission of the NGNP.

2.2.3.1 Develop and Demonstrate a Commercial-Scale Plant

2.2.3.1.1 Commercial-Scale Demonstration

- The reactor shall be built to commercial scale with a power level consistent with passive safety features. [2-4]

2.2.3.1.2 Passive Safety Design

- The NGNP shall have adequate passive safety systems to cool the core down from full power to safe shutdown mode and limit the fuel temperatures under accident conditions to levels consistent with the fuel performance requirements. [2-4]

2.2.3.1.3 Fuel Qualification

- Fuel performance shall be qualified and shall include a fuel design specification, fuel fabrication specification, quality assurance plan and program, irradiation testing and identification of failure probabilities as a function of operating condition. [2-4]

2.2.3.1.4 Design Life

- The NGNP shall be designed for a 60-year service life. For components that cannot be designed for 60-year operation, provisions shall be made in the design for economic replacement of the part or component. [2-4]

2.2.3.1.5 Defense-in-Depth Philosophy

- The NGNP NHSS shall be designed in accordance with defense-in-depth philosophy and the intent to eliminate the need for off-site evacuation and sheltering. [2-4]

2.2.3.1.6 Safeguards

- The NGNP shall incorporate measures necessary to prevent unauthorized access to nuclear material items, theft, diversion, hoaxes, and other malevolent acts, including sabotage intended to release radioactivity or disrupt operations as stated in 10 CFR 74, Material Control and Accounting of Special Nuclear Material, and 10 CFR 75, Safeguards on Nuclear Material – Implementation of US International Atomic Energy Agency (IAEA) Agreement. [2-4]

2.2.3.1.7 Security

- Per 10 CFR 73, *Physical Protection of Plants and Materials*, provisions (as adapted for the PBMR) for site security, including, barriers, access controls, intrusion detection systems, site security forces, central alarm facilities, backup power for security functions, protection during storage and handling, and protection during radiological, fire, or other emergencies shall be included to provide for the protection of the reactor, reactor fuel, spent fuel, electrical power, and hydrogen, all of which are anticipated to be present at high-hazard levels. Protection methods used against the possibility of violent external assault, attack by stealth or deception, and sabotage, including the potential participation of one or more employees shall be included. [2-4],[AUTH]

2.2.3.1.8 Fuel Performance

- The fuel shall perform to a level such that the following top-level requirements are satisfied for the NHSS design: [2-4],[AUTH]
  - During normal operations, offsite radiation doses to the public shall be less than the limits specified in Appendix I of 10 CFR 50 and 40 CFR 190.
  - Occupational radiation exposures shall be no greater than 10% of the limits specified in 10 CFR 20.
  - During design-basis accidents, offsite doses at the site Exclusion Area Boundary (EAB) shall be less than those specified in the Manual of Protective Action Guides and Protective Actions for Nuclear Incidents (EPA-520/1-75-001) for sheltering and evacuation.

2.2.3.1.9 System Interactions

- The interfaces between the NHSS and the hydrogen production unit or other process heat systems shall be designed to ensure that failures or upset conditions in the reactor primary system do not result in failures or adverse impacts to the other interfacing systems. [2-4]

2.2.3.2 Develop and Demonstrate Hydrogen Production

2.2.3.2.1 Hydrogen Production in Cogeneration Mode

- The NGNP shall be designed for continuous operation in either the 100% electric power production mode or in the cogeneration mode with the equivalent of up to 50 MWt of the reactor's thermal energy used for hydrogen production. [2-4]

2.2.3.2.2 Thermo-chemical Process and High-Temperature Electrolysis

- Hydrogen production shall be demonstrated using a thermo-chemical process and a high-temperature steam electrolysis process. [2-4] (Note: the preconceptual design adapts the reference HyS process.)

2.2.3.3 Develop and Demonstrate High-Efficiency Power Conversion

2.2.3.3.1 High-Efficiency Electric Power Conversion

- The electric power conversion system, in the all-electric mode, shall have an overall efficiency (defined as net electrical output divided by net thermal input) of about [36%] to convert thermal power to electrical. Overall efficiency shall be as high as possible, and consistent with other related parameters, to optimize economics. [2-4], [AUTH]

2.2.3.3.2 Electric Power Production at Commercial Scale

- The electric power production system shall be designed and sized to produce electricity at commercial scale using 100% of the NHSS thermal energy. [2-4]

2.2.3.4 Obtain Licenses and Permits to Construct/Operate the NGNP

2.2.3.4.1 License Rules for NGNP

- Pending a successful pre-application program with the NRC, the NHSS shall obtain a Combined Operating License (COL) from the NRC via 10 CFR 52 rules. [2-1], [2-4],[2-16]

2.2.3.4.2 Risk-Informed, Performance-Based Approach

- The NGNP project shall use a risk-informed, performance-based approach to regulatory decision-making. [2-4],[2-16]

2.2.3.4.3 Probabilistic Risk Assessment (PRA)

- The NGNP project shall perform a full-scope probabilistic risk assessment which includes analyses of internal and external events. [2-4],[2-16]

2.2.3.5 Performance

2.2.3.5.1 Human-Machine Interface

- The NGNP design shall optimize the human-machine interface based on human factors engineering principles and operating experience to the extent possible for a single integrated NHSS, HPS and PCS without compromising plant safety. [2-4], [2-16],[AUTH]

2.2.3.5.2 Need for Operator Actions

- The integrated NGNP shall be designed to minimize the need and maximize the time available for operator actions in response to plant transients, and other routine/non-routine activities during normal operations, startup, shutdown, and surveillance/testing. [2-4],[2-16]

2.2.3.5.3 Integrated Control Room Design

- The NGNP design shall permit the operators to take control of the reactor and auxiliaries from within the single integrated control room using the manual mode at any time. [2-4],[2-16]

2.2.3.5.4 Staffing for Operation and Maintenance of Integrated Facility

- The NGNP shall be designed to optimize the staffing needed for integrated operation and maintenance activities to the extent possible without compromising plant safety. [2-4],[2-16]

2.2.3.5.5 Interface Performance

- The interfaces between the NHSS, the HPS and the PCS shall be designed to allow for safe transitions between all-electric power production at levels up to 100%, to the production of hydrogen and electric power in the cogeneration mode (where the hydrogen production consumes up to 50 MWt) without NHSS shutdown. [2-4], [2-16],[PATS]

2.2.3.6 Include Provisions for Inspection and Testing

2.2.3.6.1 Safety and Operational Performance Testing

- The NGNP NHSS design shall include sufficient flexibility to allow for the investigation of safety and operational performance margins in the plant responses to anticipated operating occurrences and risk-important events, both for the initial design and as advancements and modifications for future designs are considered. [2-4],[AUTH]

2.2.3.6.2 Evaluation and Testing of Investment Protection Features

- The NGNP shall include provisions for evaluating and testing investment protection systems that are separate and independent of plant safety and control systems. [2-4],[AUTH]

2.2.3.6.3 Planned Inspection of Integrated Facility

- After [TBD] years of operation, the NGNP facility shall shutdown for an inspection as required to verify performance for long-term materials qualification and component lifetimes. [2-4],[AUTH]

2.2.3.7 Enable Demonstration of Energy Products and Processes

2.2.3.7.1 Hydrogen Applications

- The NGNP Project shall establish a test bed for evaluating various local and regional uses of hydrogen. [2-4]

2.2.3.7.2 Hydrogen Storage and Distribution

- The NGNP Project shall apply hydrogen storage and distribution systems adequate to support the needs of the hydrogen infrastructure test bed, and designed to demonstrate the safety and economics of the different hydrogen storage and distribution technologies. [2-4]

2.2.3.7.3 Indirect Power Conversion System

- The NGNP shall include provisions for the later addition of an indirect supercritical CO_2 Brayton cycle power conversion system that uses up to 50 MWt from the NGNP

reactor to produce electricity at a target overall power conversion efficiency of 45%. [2-4]

2.2.3.8 Plant and Fuel Acquisition

- The NGNP (including fuel supply and services) design, licensing, and procurement, construction, plus startup and testing support shall be provided by a consolidated vendor team. [2-1],[AUTH]

2.2.3.9 Operation and Training

- The NGNP shall include a plant simulator as a control system design tool as well as for operator training. [2-1],[2-4],[AUTH]
- The NGNP shall be operated by a commercial based nuclear and hydrogen plant operator entity. [2-1]
- The NGNP Project shall provide for the training of commercial plant operators. [2-1]

2.2.3.10 Quality and Configuration Management Requirements

2.2.3.10.1 Quality Assurance

- The NGNP project shall use the U.S. national consensus standard ASME NQA-1-1997 "Quality Assurance Program Requirements for Nuclear Facilities Applications" (see Ref. 9) and Subpart 4.2 of ASME NQA-1-2000 “Guidance on Graded Application of Quality Assurance (QA) for Nuclear-Related Research and Development” for project specific development R&D activities. [2-4]
- The Quality Assurance requirements for specific-project activities will be specified in project-specific Quality Assurance Plans (QAPs). The project-specific QAPs will include the management controls commensurate with the project work scope and importance to the Generation IV Program goals and objectives. [2-4]

2.2.3.10.2 Configuration Management

- A formal configuration management process shall be established and used throughout the NGNP life cycle to control the activities and interfaces among design, construction, and information management activities to ensure that the configuration of the facility is established, approved, and maintained. Configuration management practices shall apply to all contractors and subcontractors as identified by the Systems Engineering Management Plan (SEMP). The requirements for configuration management are found in the U.S. national consensus standard NQA-1-1997. [2-4]

2.2.3.11 Environmental Requirements

- The NGNP project shall minimize the use of natural resources consistent with efficient and cost effective facility and process designs. [2-4]

2.2.3.11.1 Environmental Impact Statement

- An Environmental Impact Statement shall be prepared for the NGNP. NRC regulations implementing the National Environmental Policy Act are contained in 10 CFR 51, Environmental Protection Regulations for Domestic Licensing and Related Regulatory Functions, with 10 CFR 51.45, Environmental Report, providing general requirements for the contents of the environmental reports, including consideration of alternatives to proposed actions. [2-4]

2.2.3.11.2 Air

- Emissions from the NGNP and hydrogen production facilities shall comply with all the applicable requirements of the Clean Air Act/Air Programs. Applicable Federal regulations include 40 CFR 50 - 99, Clean Air Act. [2-4]

2.2.3.11.3 Water

- For the use and release of water, the NGNP and hydrogen production facilities shall comply with all applicable requirements of the Clean Water Act/Water Programs. Applicable Federal regulations include 40 CFR 100–149, Clean Water Act. [2-4]

2.2.3.11.4 Radioactive Releases

- Offsite radioactive releases from the NGNP shall comply with all NRC, EPA and associated DOE requirements including dose limits specified in 10 CFR 20, 10 CFR 50 Appendix I, and 40 CFR 190 for normal operation and 10 CFR 100 for design basis accidents. [2-4]

2.2.3.11.5 Wastes

- The NGNP project shall minimize the generation of all wastes, including radioactive, non-radioactive, and mixed wastes, and shall comply with applicable DOE Orders and NRC Regulations in the treatment of these wastes. [2-4]

2.2.3.11.6 Spent Nuclear Fuel

- Provision for temporary storage of discharged spent fuel shall be provided in the design of the NGNP facility. Spent nuclear fuel generated by the NGNP reactor will be packaged and shipped to a Federal Repository for burial according to the applicable regulations in effect at the time of reactor discharge. [2-4]

2.2.3.12 FERC Requirements

- As appropriate, the sale of power from the NGNP shall comply with FERC contract and reporting requirements. For example, if the sale of power from the NGNP is to one or more entities that will resale the power to others, the contract terms will be regulated by Federal Energy Regulatory Commission (FERC). [AUTH]

2.3 FUTURE STUDIES

2.3.1 Consolidate Reference Top Level Requirements

A front-end, thorough review and comment resolution process with BEA and other stakeholders on the top level requirements proposed for the reference PBMR H2 PHP-based NGNP is needed to assure that the conceptual design effort is well grounded. Additionally, the NGNP-specific requirements (e.g., site and demonstration related) need to be compared with those needed for a commercial plant for a generic site to assure that any differences are reconciled.

2.3.2 Applications Study

The portfolio of leading applications accessible with the reference NHSS design is needed for the advancement of the NGNP Alliance as well as for the development of additional and/or enveloping top level requirements for the NGNP. The Westinghouse Team will build upon past and ongoing internal work on such applications to effect a significant cost-sharing contribution to the overall effort. To date, the following applications have been identified for this task.

2.3.2.1 Oil Sands (OS) Applications

- Describe the OS application and market conditions in order to frame the basic market opportunity for HTGR process heat in this market.
- Develop a reference summary level flowsheet and scoping economic assessment for coupling a mature PBMR Process Heat Plant (PHP) for steam production for OS applications with high pressure Steam Assisted Gravity Drainage (SAGD) process to recover raw bitumen.
- Develop a reference scoping economic assessment for the conventional gas fired production systems envisioned as the comparative bases.
- Develop economic comparisons of the above and identify key drivers such as capital costs, price of natural gas and cost of CO2 sequestration (or related tax).
- Characterize the environmental, energy security or other benefits and issues derived from the application of PBMR process heat in this application.
- Based on the economic potential above, develop one or more strategy options for demonstrating such applications as part of the NGNP Project, including cooperative initiatives with Canadian based OS stakeholders.

2.3.2.2 Enhanced Oil Recovery (EOR) Applications

- Describe the EOR application and market conditions in order to frame the basic market opportunity for HTGR process heat in this market.
- Survey the range of heavy oil deposits in the US to determine representative steam requirements in terms of practical steam production needs and staged EOR development increments.
- Develop a reference summary level flowsheet and scoping economic assessment for coupling a mature PBMR PHP for EOR applications.
- Develop a reference summary level flow sheet and scoping economic assessment for the conventional EOR envisioned as the comparative bases.
- Develop economic comparisons of the above and identify key drivers such as capital costs, price of natural gas and cost of CO2 sequestration (or related tax).
- Characterize the environmental or other benefits and issues derived from the application of PBMR process heat in this application.
- Develop economic comparisons of the above and identify key drivers such as PBMR capital costs, price of natural gas and penalties for CO2 emissions with sensitivity analyses.
- Based on the economic potential above, develop one or more strategy options for demonstrating such applications as part of the NGNP Project.

2.3.2.3 Steam Methane Reforming (SMR) Application

- Describe the SMR hydrogen production application and market conditions in order to frame the basic market opportunity for HTGR process heat in this market.
- Define a reference summary level flowsheet and scoping economic assessment for coupling a mature PBMR PHP for SMR applications projected for the co-production of hydrogen and steam or electric power.
- Develop a reference summary level flow sheet and scoping economic assessment for the SMR process incorporated into a conventional hydrogen plant envisioned as the comparative bases.
- Develop economic comparisons of the above and identify key drivers such as PBMR capital costs, price of natural gas and cost of CO2 sequestration (or related tax).
- Characterize the environmental or other benefits and issues derived from the application of PBMR process heat in this application.
- Based on the economic potential above, develop one or more strategy options for demonstrating such applications as part of the NGNP Project.

2.3.2.4 High Temperature Steam Electrolysis (HTSE) Application

- Describe the HTSE hydrogen production application and market conditions in order to frame the basic market opportunity for HTGR process heat in this market.

- Define a reference summary level flowsheet and scoping economic assessment for coupling a mature PBMR PHP for HTSE applications projected for the co-production of hydrogen and steam or electric power.
- Using the conventional SMR process and economics developed in Task 3, develop economic comparisons with the HTSE process and identify key drivers such as PBMR capital costs, price of natural gas and cost of CO2 sequestration (or related tax).
- Characterize the environmental or other benefits and issues derived from the application of PBMR process heat in this application.
- Based on the economic potential above, develop one or more strategy options for demonstrating such applications as part of the NGNP Project.

2.3.2.5 Coal-to-Gas (CTG) and Coal-to-Liquids (CTL) Applications

- Describe the CTG and CTL applications and market conditions in order to frame the basic market opportunity for nuclear process heat in this market.
- Develop reference summary level flowsheets and scoping economic assessments for coupling a mature PBMR PHP for CTG and CTL process applications with the following hydrogen production technologies: SMR, HTSE, and Hybrid Sulfur (HyS) – the latter from the original preconceptual scope.
- Develop a reference summary level flow sheet and scoping economic assessment for conventional CTG and CTL processes envisioned as the comparative bases.
- Develop economic comparisons of the above and identify key drivers such as PBMR capital costs, price of coal and cost of CO2 sequestration (or related tax).
- Characterize the environmental or other benefits and issues derived from the application of nuclear process heat in this application.
- Based on the economic potential from above, develop one or more strategy options for demonstrating such applications as part of the NGNP Project.

2.3.2.6 Integrated Demonstration Strategies

- Building upon the results of the Preconceptual Design Report and the results from the above subtasks, develop the likely integrated demonstration strategies for one or more of the applications. Assess the relative pros and cons, and provide recommendations and rationale for overall NGNP Project and Alliance development.

2.3.2.7 Develop Enveloping Top Level Requirements

- Based on the results of all the above, revise top level requirements to envelope the mutually agreed-upon applications.

REFERENCES

[2-1] A Public/Private Partnership to Develop the Next Generation Nuclear Plant Commercial Demonstration, NGNP Public/Private Partnership Working Group, October 2006.

[2-2] Statement of Work, Preconceptual Engineering Services for the Next Generation Nuclear Plant with Hydrogen Production, Project No. 23843, Idaho National Laboratory, July 2006.

[2-3] Next Generation Nuclear Plant Project, Preliminary Project Management Plan, Idaho National Laboratory, March 2006, INEEL/EXT 05-00952, Rev. 1.

[2-4] Next Generation Nuclear Plant – High-Level Functions and Requirements, Idaho National Engineering and Environmental Laboratory, September 2003, INEEL/EXT-03-01163, as modified by the Independent Technology Review Group (ITRG) report, Design Features and Technology Uncertainties for the Next Generation Nuclear Plant, ITRG, Phil Hildebrandt, et al., April 2004.

[2-5] User Requirement Specification for Pebble Bed Modular Reactor Demonstration Unit, Document Number PNP-001, Eskom, 2000.

[2-6] Licensing Basis Event Selection for the Pebble Bed Modular Reactor, PBMR Document Number 040251, May 2006.

[2-7] Utility/User Incentives, Policies and Requirements for the Gas Turbine-Modular Helium Reactor, DOE-GT-MHR-100248, Technology Insights, September 1995.

[2-8] Advanced Light Water Reactor Utility Requirements Document, Electric Power Research Institute, December 1995.

[2-9] European Utility Requirements for LWR Nuclear Power Plants, EUR Promoters, April 2001.

[2-10] High Temperature Gas-Cooled Reactors for the Production of Hydrogen, Establishment of the Quantified Technical Requirements for Hydrogen Production that will Support the Water-Splitting Processes at Very High Temperatures, EPRI Report 1009687, Technology Insights, September 2004.

[2-11] Site Selection Report for the New Production Reactor at the Idaho National Engineering Laboratory, EGG-NPR-8517, Rev. 1 (Informal Report), July 1989.

[2-12] NGNP and Hydrogen Production Preconceptual Design Report, NGNP-01-RPT-001 Special Study 20.2 - Prototype Power Level, January 2007.

[2-13] NGNP and Hydrogen Production Preconceptual Design Report, NGNP-01-RPT-001 Special Study 20.3 - High Temperature Process Heat Transfer and Transport, January 2007.

[2-14] NGNP and Hydrogen Production Preconceptual Design Report, NGNP-01-RPT-001 Special Study 20.4 - Power Conversion System, February 2007.

[2-15] NGNP and Hydrogen Production Preconceptual Design Report, NGNP-01-RPT-001 Special Study 20.6 – Licensing and Permitting Study, January 2007.

[2-16] NGNP and Hydrogen Production Preconceptual Design Report, NGNP-01-RPT-001 Special Study 20.7 – NGNP By-Products and Effluents Study, January 2007.

[2-17] Hydrogen Production Technology Assessment – Task 13.2, Presentation, Charles Bolthrunis, BEA 50% Design Review Meeting, January 10-11, 2007.

[2-18] FutureGen - Integrated Hydrogen, Electric Power Production and Carbon Sequestration Research Initiative, US DOE Office of Fossil Energy, March 2004.
[2-19] FutureGen Program Pathway toward Zero Emissions Presentation by Michael Mudd, CEO FutureGen Alliance, Inc., DOE Carbon Sequestration Conference, May 9, 2006.

LIST OF ASSUMPTIONS

NONE

APPENDICES

APPENDIX 2A FINAL DESIGN REVIEW PRESENTATION TO BEA

Section 2
Top Level Requirements

Section 3
Plant Level Design and Integration

Dan Mears

Preconceptual Design Report
90% Design Review

May 8-10, 2007

PCDR Document Roadmap

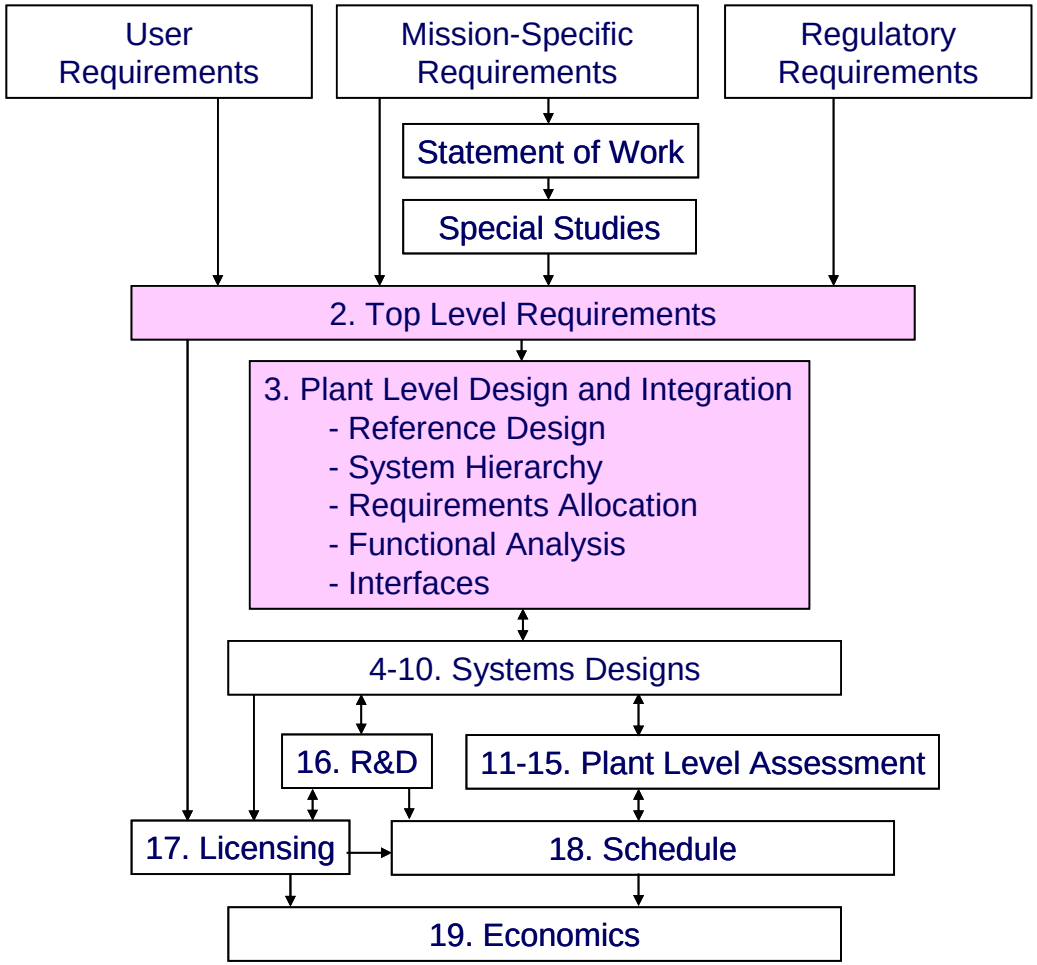

Key References/Sources for Top Level Requirements

- NGNP Public/Private Partnership prospectus, framework and interactions
- NGNP Project Management Plan, High-Level Functions and Requirements, and Statement of Work documents
- Utility/User requirements from past utility/user groups engaged with HTGR development as well as with ALWR design and certification efforts.
- Utility/user requirements from the PBMR DPP
- Ongoing user interactions with PBMR PHP project initiatives.
- Ongoing regulatory experience in the US and South Africa
- Special Studies and leading analyses within preconceptual design and engineering services contract

Top Level Requirements Development

- Top-level user, regulatory and mission-specific requirements for the NGNP project based on commercial PBMR H2 PHP design
- User (Alliance) stakeholder profiles provided for:
  - Existing, Bulk Hydrogen Producers and Distributors
  - Clean Fossil Fuel Process (Heat) Industries
  - Electric Utilities
  - Hydrogen Transportation Stakeholders
- User Commercial Incentives addressed
  - Process Heat Capability
  - Reduced Risks of Nuclear Commitment
  - Competitiveness
- User Policy Statements provided
  - Market Needs and Opportunities
  - Development Strategy

Top Level Requirements for NGNP Demonstration

- NGNP uses a full-scale PBMR H2 PHP NHSS designed for process heat delivery consistent with optimal hydrogen production.

- For the purposes of demonstration, the commercial PBMR H2 PHP hydrogen production and electricity generation functions are demonstrated in two decoupled, separate facilities:
  - Hydrogen Production Facility (HPF) sized for prototypic demonstration of a single train of the multi-train commercial HPS design and
  - Power Conversion Facility (PCF) sized to utilize the rated output of the NHSS.

Top Level Requirements - Key Drivers

- NGNP Project shall develop, license, build, test and operate a one module PBMR PHP as a demonstration for subsequent multi-module commercial plants.
- NGNP Project shall support the timely Design Certification of the standard NHSS suitable for a broad range of applications and envelope of site conditions.
- NGNP Project shall develop, permit, build, test and operate a reference hydrogen process at the full commercial train scale as a demonstration for multi-train commercial plants.
- NGNP Project shall also accommodate the demonstration of other advanced hydrogen production processes and process heat applications as well as follow-on advanced fuels, components and systems plus serve to train future operators.

Plant Level Design & Integration Requirements Flow-down

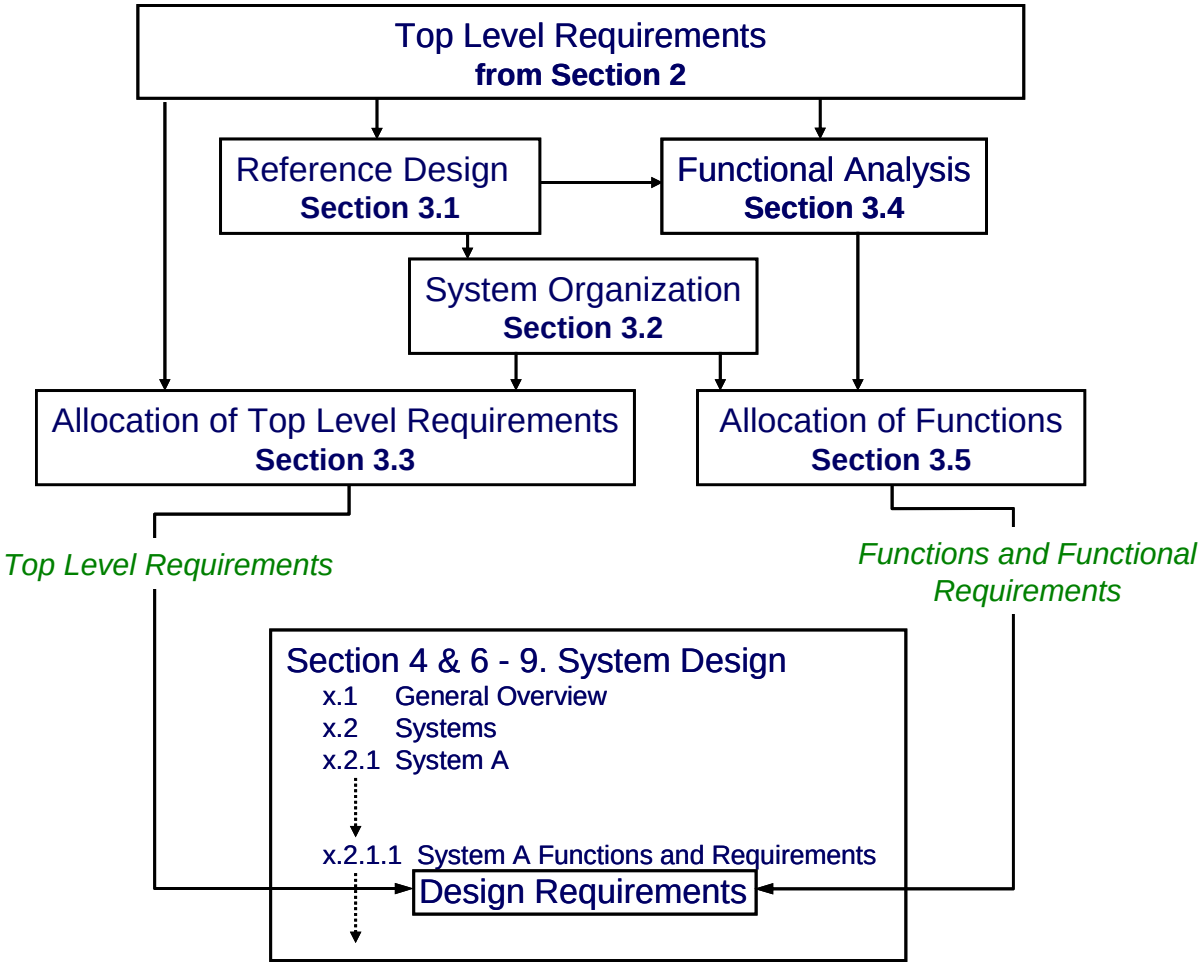

Flow Down and Allocation of Requirements to Structures Systems, and Components (SSCs)

- Goals → Top-Level Requirements → Functions → Design Requirements for SSCs

- Plant Level Requirements
  - Requirements that apply to functions of the overall plant and are imposed on more than one or all systems.

- System or Subsystem Level Requirements
  - Requirements that apply to functions of the overall plant that relate only to the respective system or subsystem,
  - or that apply to functions of the system or subsystem but not the overall plant.

Process of Design and Development

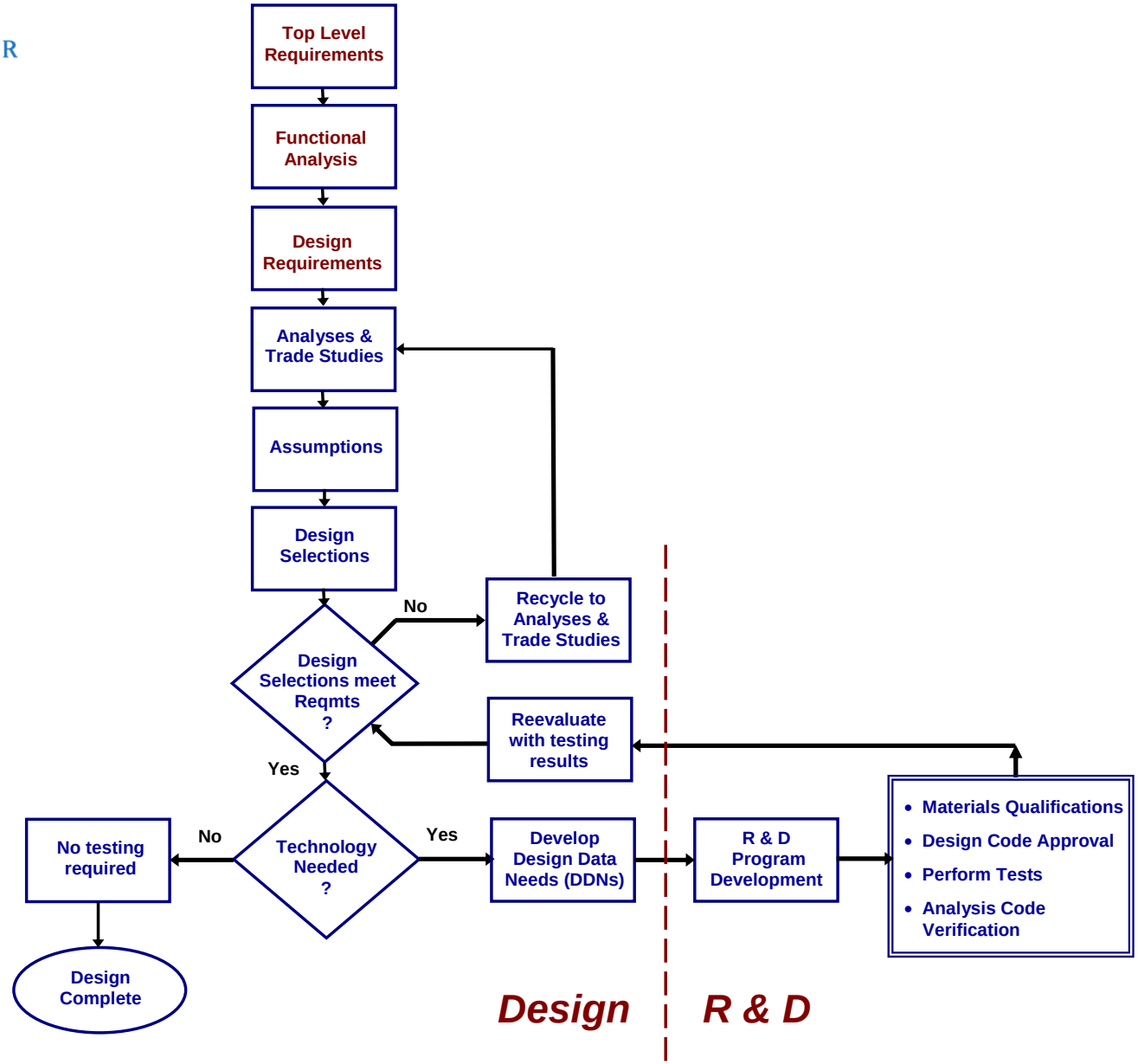

Plant Organization

Four Facilities plus BOP

- Nuclear Heat Supply Facility (NHSF)
- Heat Transport Facility (HTF)
- Power Conversion Facility (PCF)
- Hydrogen Production Facility (HPF)

Balance of Plant (BOP) Systems & Buildings

Future Studies

- Review and Consolidate Top Level Requirements for Reference Design
- Establish Leading Applications Portfolio, Requirements Envelope and Integrated Demonstration Strategy
  - Oil Sands Recovery & Upgrading
  - Enhanced Oil Recovery & Upgrading
  - Steam Methane Reforming
  - High Temperature Steam Electrolysis
  - Coal-to-Gas and Coal-to-Liquids Applications

NGNP-03-RPT-001 **May 2007**
Revision 0

NGNP and Hydrogen Production Preconceptual Design Report

SECTION 3: PLANT LEVEL DESIGN AND INTEGRATION

Revision 0

APPROVALS

Function	Printed Name and Signature	Date
Author	Daniel Allen Technology Insights	May 15, 2007
Reviewer	Fred Silady Technology Insights	May 15, 2007
Approval	Dan Mears Technology Insights	May 15, 2007

Westinghouse Electric Company LLC
Nuclear Power Plants
Post Office Box 355
Pittsburgh, PA 15230-0355

©2007 Westinghouse Electric Company LLC
All Rights Reserved

LIST OF CONTRIBUTORS

Name and Organization	Date
Charles Bolthrunis Shaw Stone & Webster Process	May 2007
Michael Correia Pebble Bed Modular Reactor (Pty) Ltd	May 2007
Karl Goff Shaw Environmental & Infrastructure	May 2007
Harold Gotschall Technology Insights	May 2007
Renee Grevenstein Pebble Bed Modular Reactor (Pty) Ltd	May 2007
Reiner Kuhy Stone & Webster Management Consultants	May 2007
Edward Lahoda Westinghouse	May 2007
Scott Penfield Technology Insights	May 2007
Gerard du Plessis M-Tech Industrial (Pty) Ltd	May 2007
Jan van Ravenswaay M-Tech Industrial (Pty) Ltd	May 2007
Peter Wells Shaw Environmental & Infrastructure	May 2007

BACKGROUND INTELLECTUAL PROPERTY

Section	Title	Description
NONE		NONE

REVISION HISTORY

RECORD OF CHANGES

Revision No.	Revision Made by	Description	Date
0	Daniel Allen Technology Insights	Initial Issue	May 15, 2007

DOCUMENT TRACEABILITY

Created to support the following Document(s)	Document Number	Revision
NGNP and Hydrogen Production Preconceptual Design Report	NGNP-01-RPT-001	0

TABLE OF CONTENTS

LIST OF TABLES **3-6**
LIST OF FIGURES **3-7**
3 PLANT LEVEL DESIGN AND INTEGRATION **3-8**
SUMMARY AND CONCLUSIONS **3-8**
INTRODUCTION **3-9**
3.1 REFERENCE DESIGN **3-13**
3.1.1 REFERENCE DESIGN RESULTING FROM SPECIAL STUDIES **3-13**
3.1.2 REFERENCE DESIGN AT COMPLETION OF THE PRECONCEPTUAL DESIGN PHASE **3-17**
3.2 PLANT SYSTEMS **3-20**
3.2.1 WORK BREAKDOWN STRUCTURE **3-20**
3.2.2 ORGANIZATIONAL STRUCTURE OF NGNP **3-27**
3.2.3 CRITICAL SSCS **3-30**
3.2.4 NOMENCLATURE **3-31**
3.3 TOP LEVEL PLANT DESIGN REQUIREMENTS **3-32**
3.4 FUNCTIONS **3-53**
3.4.1 GOAL 0 - PRODUCE HYDROGEN AND GENERATE ELECTRICITY SAFELY AND ECONOMICALLY **3-53**
3.4.2 GOAL 1 - MAINTAIN PLANT OPERATION **3-53**
3.4.3 GOAL 2 - PROTECT PLANT CAPABILITY **3-54**
3.4.4 GOAL 3 - MAINTAIN AND ASSURE PUBLIC SAFETY **3-54**
3.4.5 GOAL 4 - PROVIDE EMERGENCY PREPAREDNESS **3-54**
3.4.6 FUNCTIONAL ANALYSIS **3-54**
3.5 ALLOCATION OF FUNCTIONS TO SYSTEMS **3-56**
3.6 DESIGN REQUIREMENTS **3-61**
3.7 INTERFACE REQUIREMENTS **3-62**
3.7.1 EXTERNAL INTERFACES **3-62**
3.7.1.1 Input to the Plant 3-62
3.7.1.2 Output from the Plant 3-63
3.7.2 INTERFACES AMONG SYSTEMS **3-63**
3.8 DESIGN DATA NEEDS **3-66**
3.9 COMPLEXITY, RISKS, AND FUTURE STUDIES **3-67**
3.9.1 COMPLEXITY AND RISKS **3-67**

3.9.2 FUTURE STUDIES 3-67
REFERENCES 3-69
DEFINITIONS 3-70
LIST OF ASSUMPTIONS 3-73
APPENDICES 3-74
APPENDIX 3A WBS DICTIONARY 3-74
APPENDIX 3B ORGANIZATION OF NGNP SYSTEMS AND COMPONENTS 3-80
APPENDIX 3C FUNCTIONAL TREE 3-86
APPENDIX 3D FINAL DESIGN REVIEW PRESENTATION TO BEA 3-108

LIST OF TABLES

Table 3.2-1: Organization of NGNP Facilities 3-27
Table 3.2-2: Organization of NGNP Overall Systems 3-28
Table 3.2-3: Critical Systems, Structures and Components 3-30
Table 3.3-1: Allocation of Top Level Requirements 3-33
Table 3.5-1: Allocation of Functions to Overall Systems 3-57
Table 3.7-1: Functional Interfaces Among Overall Systems 3-64
Table 3.7-2: Physical Interfaces Among Overall Systems 3-65

LIST OF FIGURES

Figure 3-1: Process of Design and Development 3-10
Figure 3-2: NGNP Preconceptual Design Development (PCDR Sections Identified) 3-11
Figure 3-3: Evolution of Design Requirements 3-12
Figure 3.1-1: NGNP Schematic from Special Studies 3-14
Figure 3.1-2: Hydrogen Production System Schematic Flow Diagram 3-15
Figure 3.1-3: Power Conversion System at Full PCS Power from Special Studies 3-16
Figure 3.1-4: Power Conversion System with HPS at 50 MWt from Special Studies 3-16
Figure 3.1-5: NGNP Schematic at Completion of Preconceptual Design 3-17
Figure 3.1-6: Final Heat Transport System at Full PCS Rated Power at Completion of Preconceptual Design 3-18
Figure 3.1-7: Heat Transport System with HPS at 50 MWt at Completion of Preconceptual Design 3-19
Figure 3.2-1: NGNP Demonstration Project WBS – Top Levels 3-21
Figure 3.2-2: NGNP Demonstration WBS to Fourth Level - Owners Engineer & Design 3-22
Figure 3.2-3: NGNP Demonstration WBS to Fourth Level - Construct 3-23
Figure 3.2-4: NGNP Demonstration WBS to Fourth Level - Initial Ops & Inspection 3-24
Figure 3.2-5: NGNP Demonstration WBS to Fourth Level - Operate Commercially 3-25
Figure 3.2-6: NGNP Demonstration WBS to Fourth Level – Post Ops & DD&D 3-26
Figure 3.2-7: Organization of NGNP Facilities 3-27
Figure 3.2-8: Organization of Nuclear Heat Supply System 3-28
Figure 3.2-9: Organization of Heat Transport System 3-28
Figure 3.2-10: Organization of Hydrogen Production System 3-29
Figure 3.2-11: Organization of Power Conversion System 3-29
Figure 3.2-12: Organization of Balance of Plant Systems 3-29
Figure 3.2-13: Relation of Nomenclature 3-31
Figure 3.4-1: NGNP Goals 3-53

3 PLANT LEVEL DESIGN AND INTEGRATION

SUMMARY AND CONCLUSIONS

A summary is provided of the Next Generation Nuclear Plant (NGNP) Demonstration design and the process that leads to the formal establishment of design requirements for Systems, Structures and Components (SSCs). Those design requirements are the starting point for the subsequent sections on system and building descriptions.

Systems Integration is a disciplined approach to managing and designing complex systems. It is required for the successful attainment of goals where divergent engineering technologies from separate disciplines are combined. Aerospace and nuclear projects are examples of such complex systems where formal systems engineering is applied with success.

The core of the systems integration process in the preconceptual and conceptual design phases is the development of design requirements. The process is vital at the beginning of the design process, and system integration needs to be maintained as a process during design, capturing, linking, analyzing, and managing changes to requirements and their traceability.

Successful system integration also ensures conformance to the plant user's goals and the compliance of the resulting design with regulations and standards.

This process and the resulting requirements flow-down are one step down from the "top" of the documentation "pyramid" and at the convergence of the documentation of the Overall Systems. Documentation included are the following:

- Summary Description of the Reference Design
- The Plant Work Breakdown Structure
- Organization of the Plant Systems
- Identification of Critical Systems, Structures and Components
- Allocation of Top Level Requirements to Overall Systems
- Allocation of Functions to Overall Systems
- Tabulation of Plant Interfaces
- Tabulation of Overall System to System Interfaces

INTRODUCTION

The objective of NGNP systems integration is to establish and control the design requirements (see Definitions section) whereby an optimal balance is adopted in the overall integrated plant design. The design requirements come 1) from the top level plant design requirements, which are user, regulatory and mission-specific requirements, and 2) from functional requirements (see Definitions section). The functional requirements are developed according to a formal Functional Analysis that responds to the top level requirements.

Functional Analysis is one element of an integrated approach to overall design which has been previously defined [3-1]. It has been applied in the past to related nuclear plant designs, particularly in detail to the Modular High Temperature Gas-Cooled Reactor (MHTGR) [3-2] and at the top level to hydrogen production design concepts [3-3] and [3-4].

The role of functions and requirements in the integrated design and technology development program is illustrated in Figure 3-1. Also shown is the relationship of the design process to technology development via the Design Data Needs (DDNs).

Figure 3-2 shows the relationships of the sections of the NGNP Preconceptual Design Report and the position of this section.

Figure 3-3 schematically shows how the design requirements evolve, with a key to the subsections of Section 3.

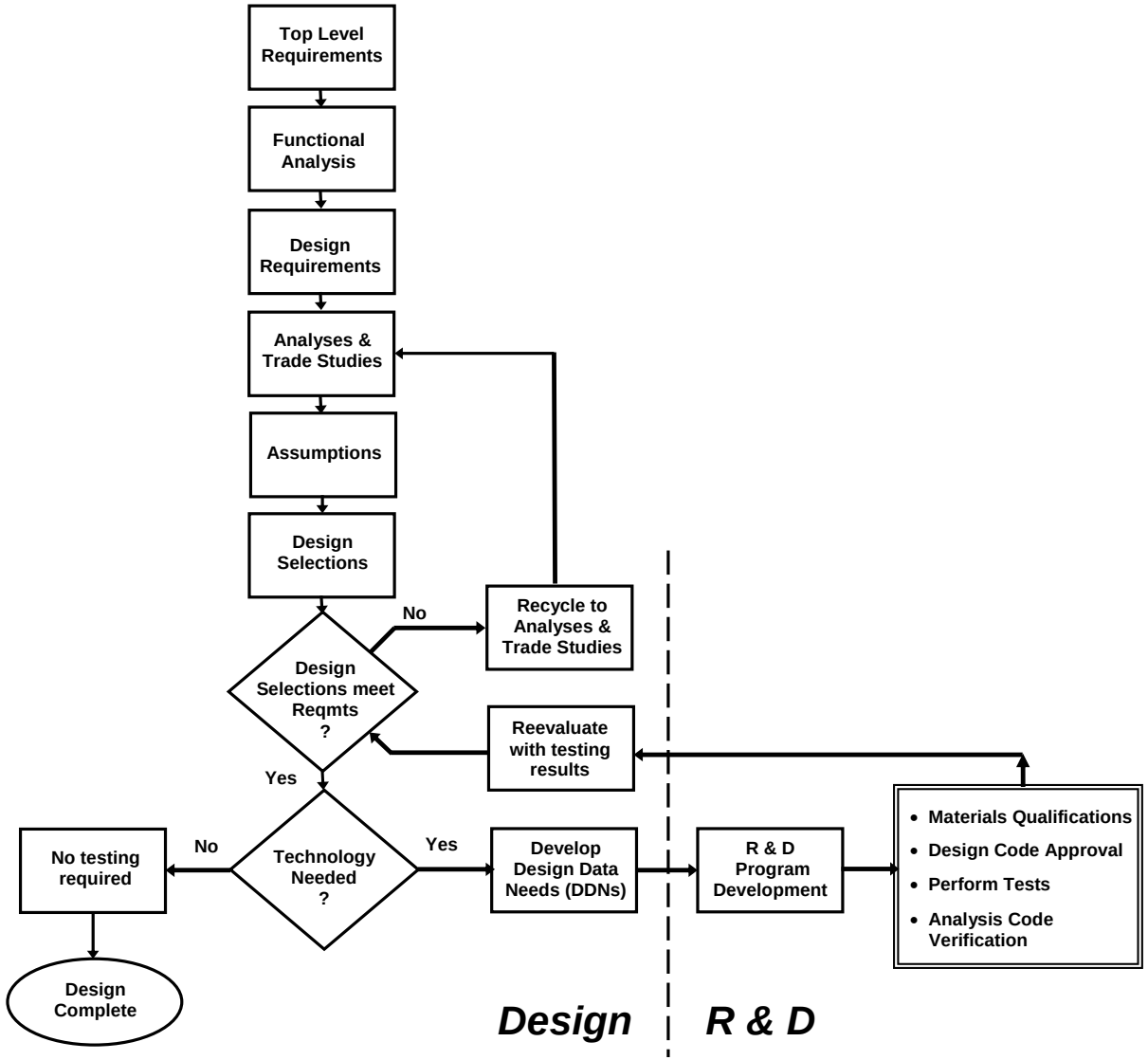

Figure 3-1: Process of Design and Development

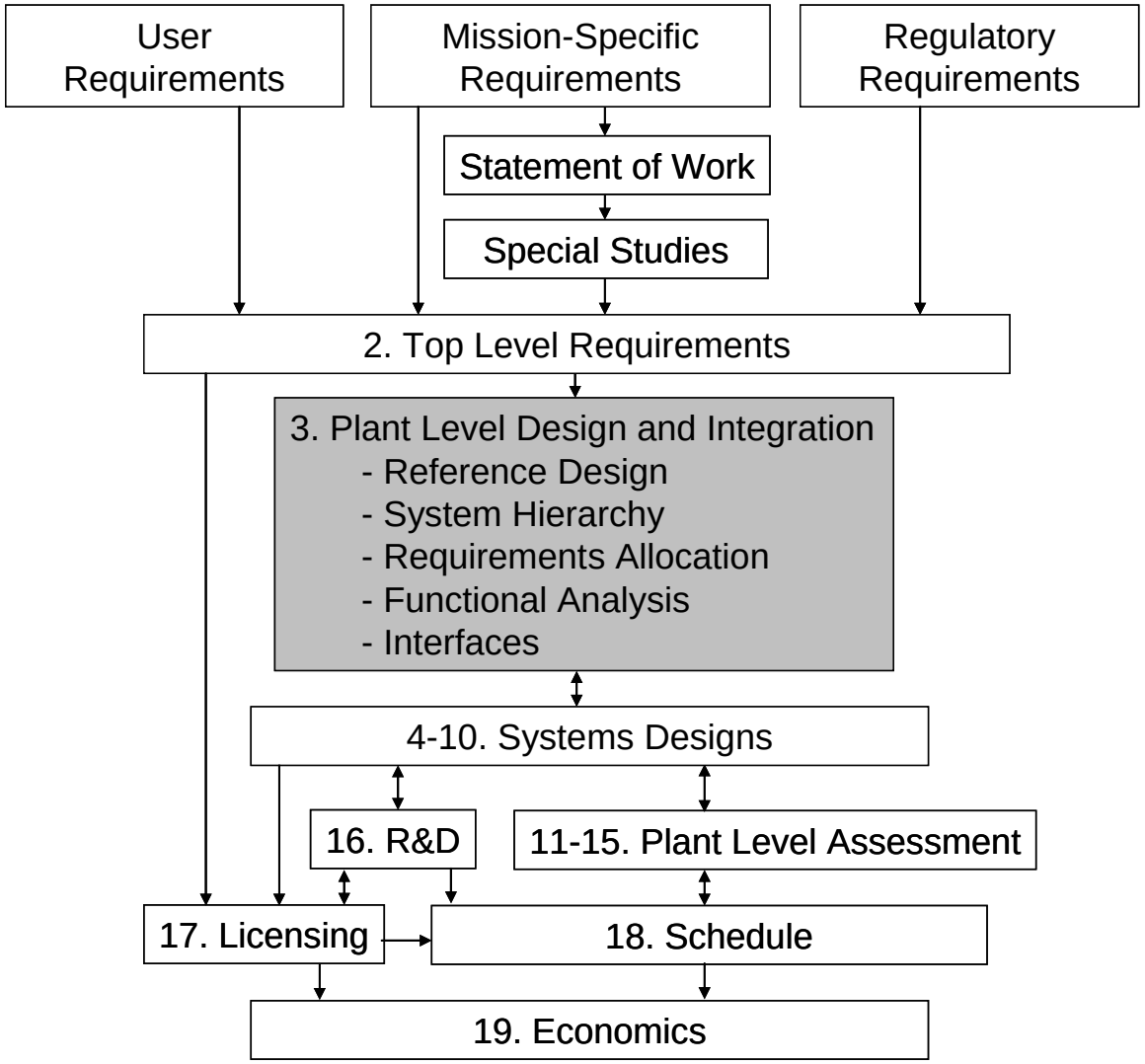

Figure 3-2: NGNP Preconceptual Design Development (PCDR Sections Identified)

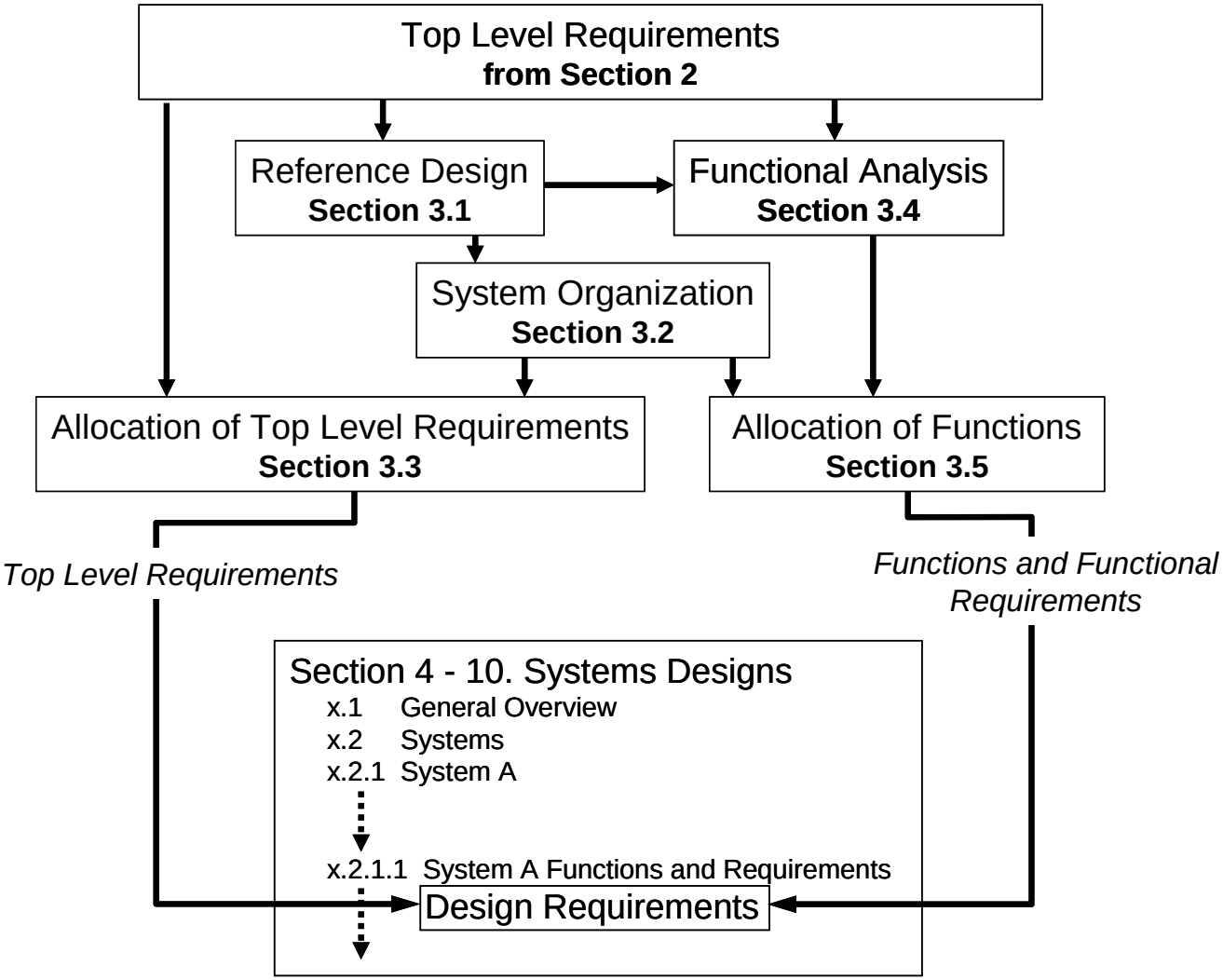

Figure 3-3: Evolution of Design Requirements

3.1 REFERENCE DESIGN

The PBMR-based NGNP preconceptual design began with Special Studies which determined the basic configuration and parameters of the plant design. The Special Studies are documented in the series of six reports [3-5] through [3-10] and Preconceptual Design Report (PCDR) Section 7.1. The resulting NGNP pebble bed plant design is described in summary in this section.

3.1.1 Reference Design Resulting from Special Studies

The Special Studies were conducted at the outset of the preconceptual design phase. The objective was to identify the general configuration to be used as a starting point for the remainder of the deign process. The Special Studies were based on the guidance provided by the customer (INL/BEA), including the Statement of Work (SOW).

The PBMR-based NGNP consists of a helium-cooled graphite-moderated nuclear heat source, which provides energy to produce hydrogen in the Hybrid Sulfur (HyS) thermo- electro-chemical water splitting process and to generate electricity in a steam turbine-generator (Rankine cycle). The NGNP demonstration is a single modular PBMR unit rated at 500 MWt of heat generated from the uranium fission reaction. Heated helium, at a mixed mean temperature of 950°C and 9 MPa, circulates from the nuclear reactor in the Primary Heat Transport System (PHTS) through the Intermediate Heat Exchanger (IHX). In the IHX, heat is transferred to the Secondary Heat Transport System (SHTS), operating at 8.8 MPa maximum pressure, for distribution to the Process Coupling Heat Exchanger (PCHX) of the hydrogen plant and to the Steam Generator (SG) of the power conversion (electric generating) system. Both the PHTS and SHTS helium circulators are powered by electric motor drives.

The SHTS is designed to transport and transfer heat so that either: a) the Hydrogen production system (HPS) and the Power Conversion System (PCS) both operate, or b) the PCS alone operates. It is anticipated that throughout the NGNP plant life, generally the two systems both will operate. A simplified schematic of the NGNP is provided in Figure 3.1-1.

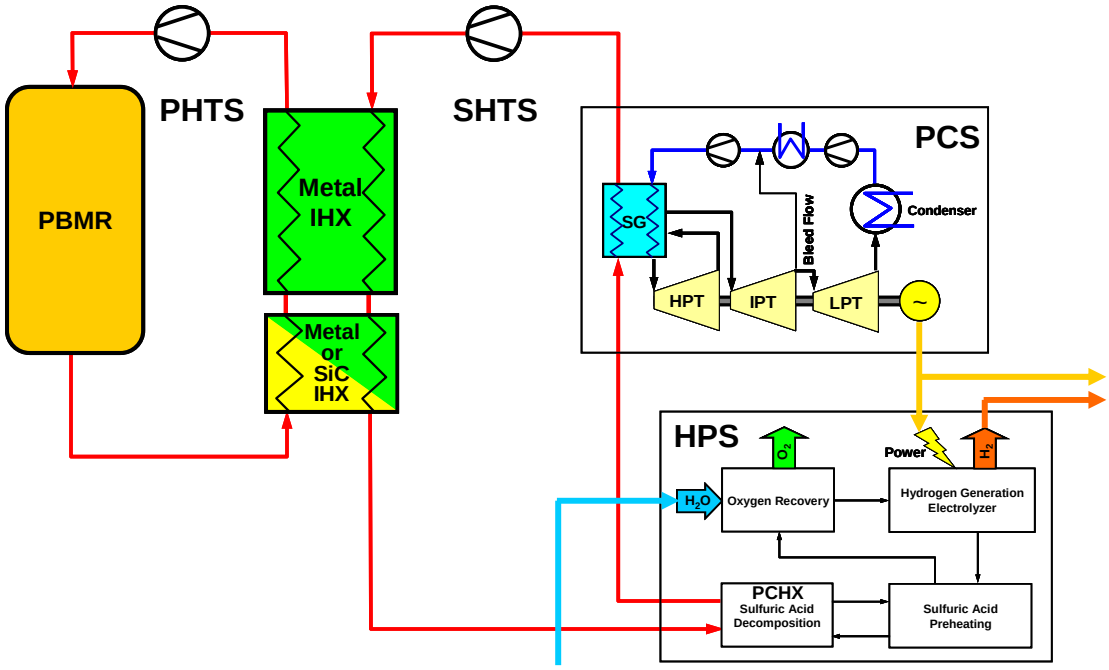

Figure 3.1-1: NGNP Schematic from Special Studies

The HPS receives up to 50 MWt of heat at a temperature of 900°C at the SHTS inlet to the PCHX. In the PCHX, sulfuric acid (H_2SO_4) is decomposed into sulfur dioxide (SO_2), water (H_2O) and oxygen (O_2) at a peak process temperature of 872°C. The sulfur dioxide and water are cooled, additional make-up water is added, and the stream at ambient temperature enters a stage of multiple electrolyzers, where electric power is used to convert the sulfur dioxide and water to sulfuric acid and hydrogen (H_2). The sulfuric acid is recycled, and the hydrogen is delivered to the plant limits at a maximum flow rate of 200 g/s at 3.7 MPa pressure.

In this process, water is the feedstock and hydrogen and oxygen the HPS products. Disposition of the oxygen product is left to be determined in later phases of the program, but it is available to be commercially utilized or it could be discharged to the environs.

The HPS, comprising the HyS water splitting process, is shown schematically in Figure 3.1-2.

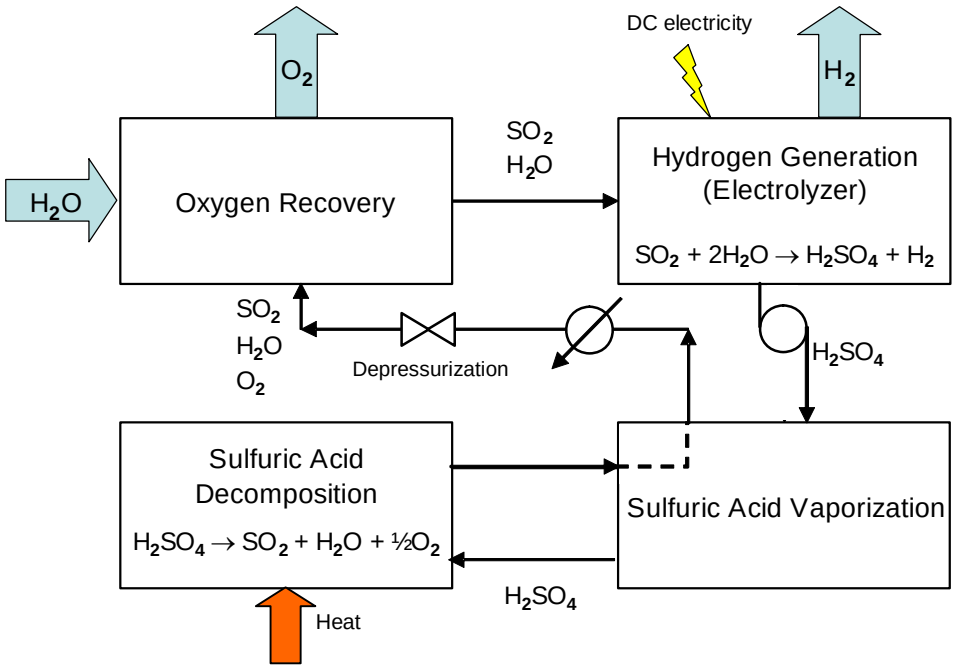

Figure 3.1-2: Hydrogen Production System Schematic Flow Diagram

The steam PCS is capable of operating over a range of thermal inputs corresponding to HPS operation from zero to 50 MWt. The PCS cycle is shown schematically in Figure 3.1-3 for the plant condition where the HPS is not operating and in Figure 3.1-4 for the condition where the HPS is taking 50 MWt from the SHTS.

The PCS is designed to receive 520 MWt of heat from the SHTS through a steam generator. Of this, 500 MWt is heat from the nuclear reaction and 20 MWt is heat added by the helium circulators. Steam at 540°C and 18 MPa pressure is circulated through a conventional turbine-generator-condenser system, to produce up to 222 MWe of electric power. After taking power to operate the PHTS and SHTS helium circulators and for other house loads, the maximum net power is 195 MWe delivered to the plant limits at 230 kV.

When operating at its maximum 50 MWt, the HPS consumes 15 MWe after conversion to DC current, which is 17 MWe of the PCS generation. In that plant condition, PCS gross generation is 194 MWe, and after taking circulator power and house loads, net electric power is 150 MWe.

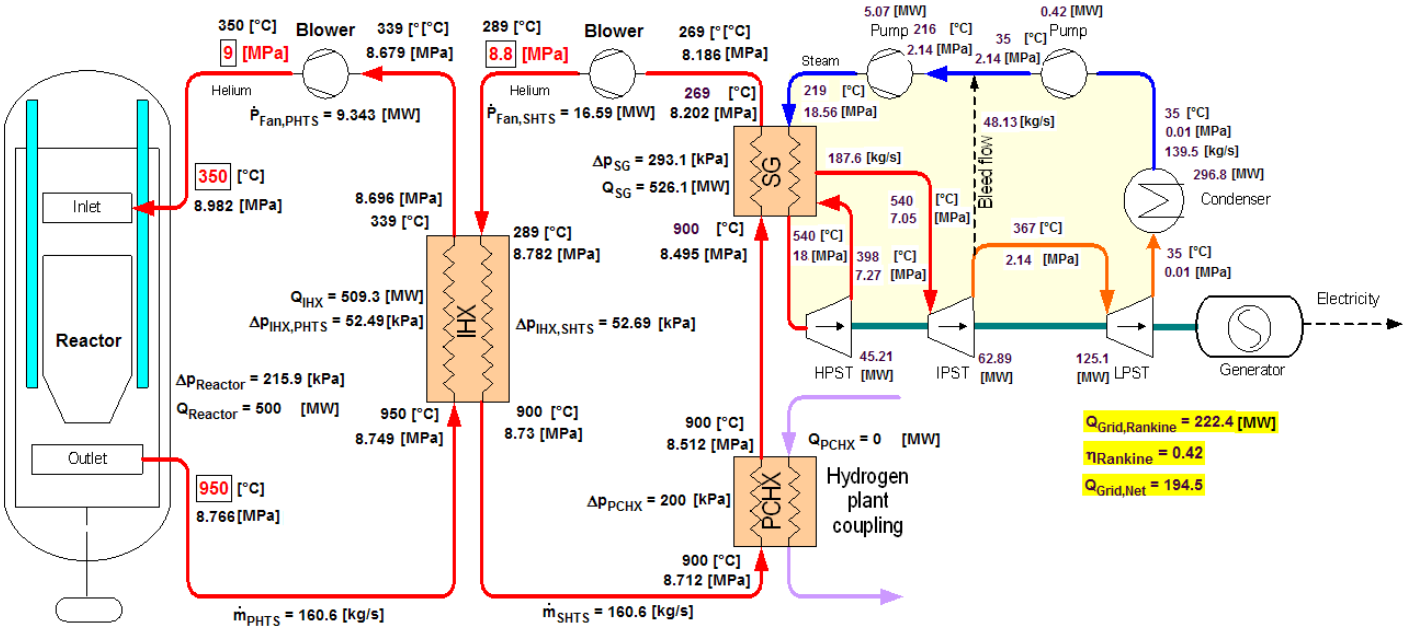

Figure 3.1-3: Power Conversion System at Full PCS Power from Special Studies

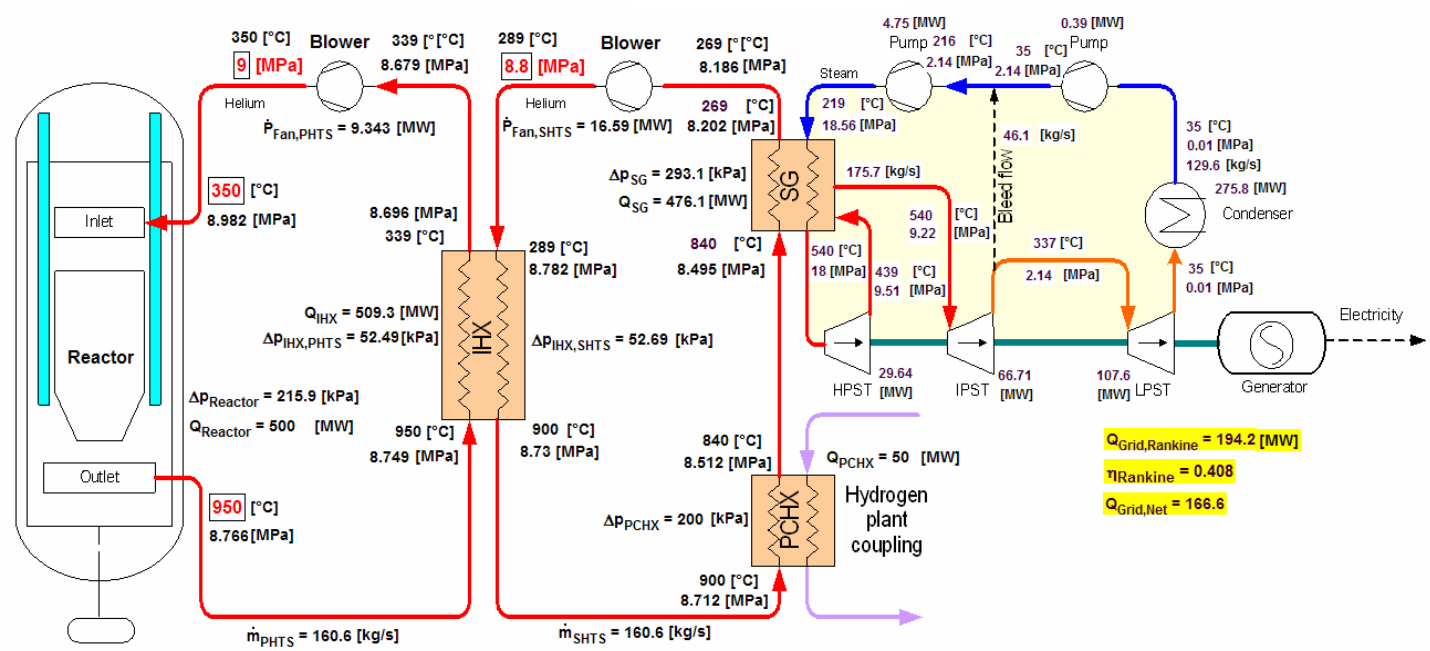

Figure 3.1-4: Power Conversion System with HPS at 50 MWt from Special Studies

Waste heat from the PCS is rejected to the atmosphere in a direct air-cooled condenser. Waste heat from the HPS, the component cooling water systems and the plant-wide auxiliaries is rejected to the air by way of separate closed cooling water systems rejecting to air.

3.1.2 Reference Design at Completion of the Preconceptual Design Phase

The preconceptual design work confirmed the results of the Special Studies. Adjustments at the plant level were made as follows:

The general arrangement of the Heat Transport System (HTS) was modified to include a bypass of the HPS in the SHTS to allow the temperature drop through the PCHX to have the same profile as would be seen in a commercial plant designed for optimum hydrogen production (see PCDR Section 2, Top Level Requirements, for discussion of the commercial design.) Approximately 25% of the SHTS flow from the IHX goes through the PCHX. Further details of the HTS are in PCDR Section 6, Heat Transport System.

The design of the PCS was further defined not to include reheat from the SHTS in the steam generator, which had been an option in the Special Studies.

A simplified schematic of the modified NGNP arrangement is Figure 3.1-5.

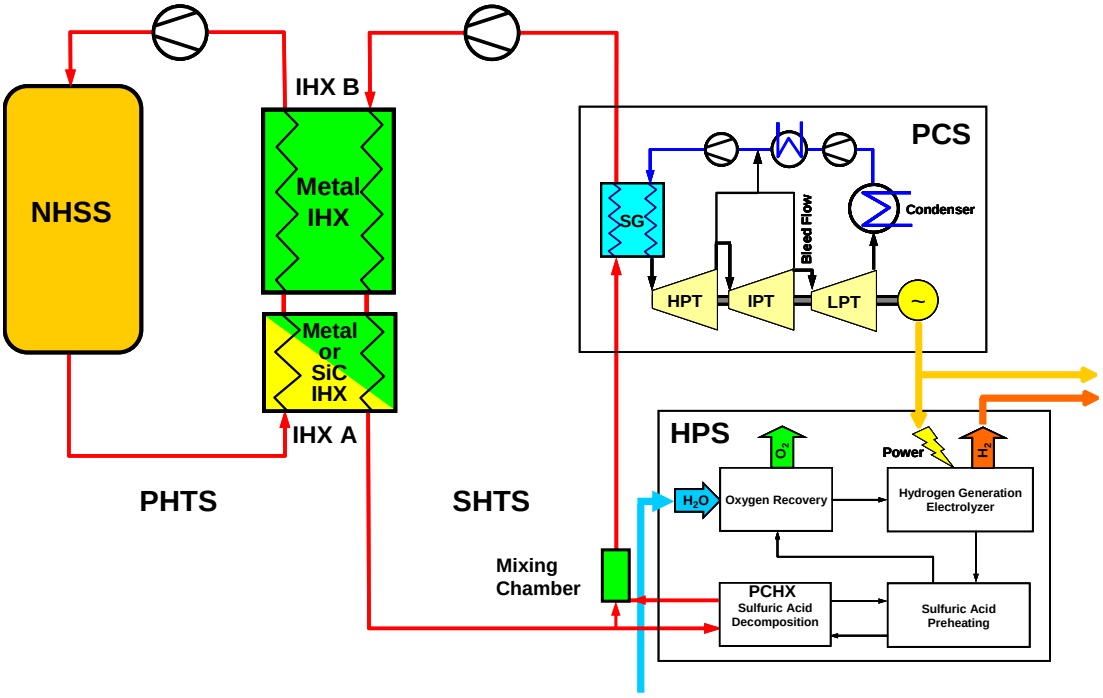

Figure 3.1-5: NGNP Schematic at Completion of Preconceptual Design

Figure 3.1-6 shows the HTS heat balance at the PCS design point, which is the plant condition with the HPS out-of-service. The PCS receives 520 MWt of heat from the SHTS through the steam generator. This heat is the net of 500 MWt heat from the nuclear reaction, less 3 MWt transported through other Nuclear Heat Supply Systems (NHSS), plus 23 MWt added work by the helium circulators. The PCS gross power output is 200 MWe. Further details of the PCS are in PCDR Section 8, Power Conversion System.

When it is operating at design hydrogen production capacity, the HPS receives 50 MWt of heat at a temperature of 900°C at the SHTS inlet to the PCHX, as before, and the process parameters within the HPS remain unchanged from Figure 3.1-2. The revised HTS heat balance at these conditions is shown in Figure 3.1-7. Further details of the HPS are in PCDR Section 7, Hydrogen Production System. The PCS at these conditions has a gross power output of 182 MWe.

The following sections of this report are based on this design.

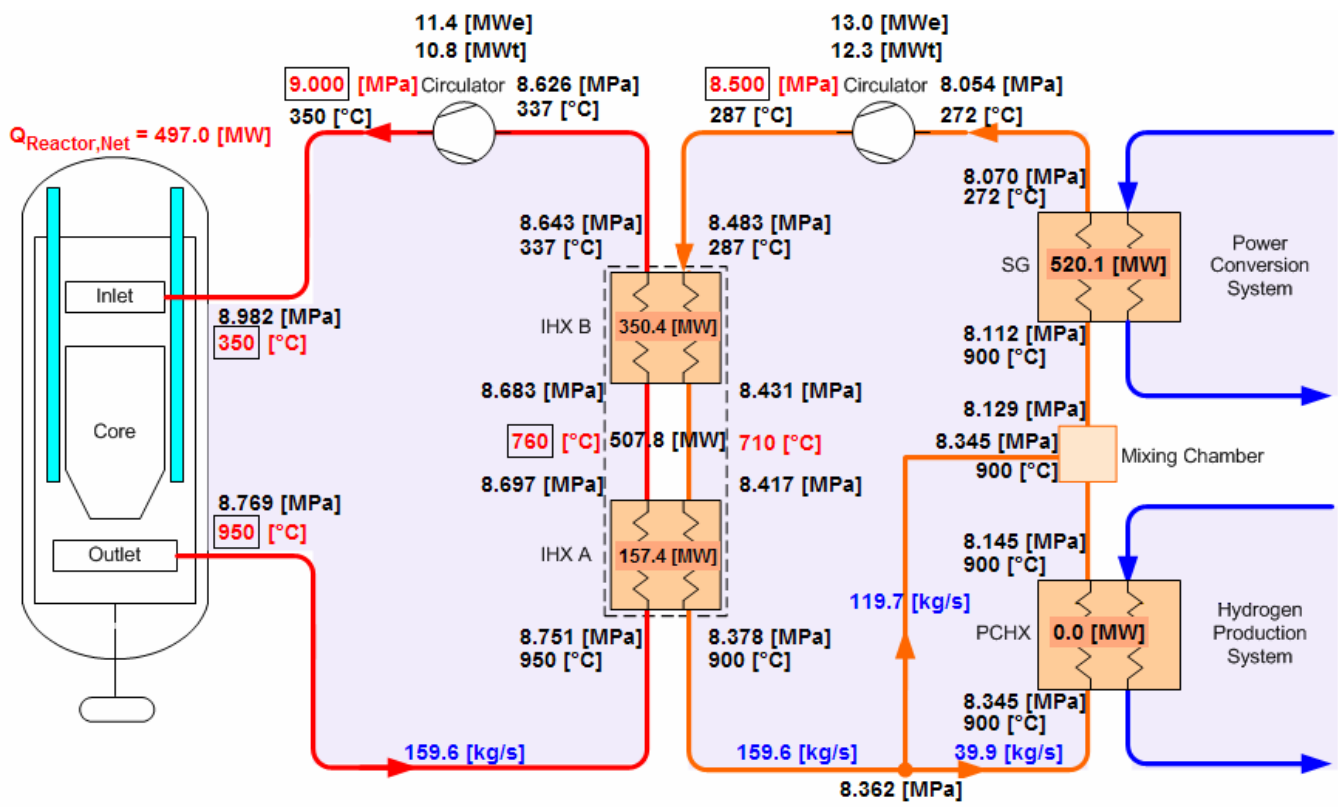

Figure 3.1-6: Final Heat Transport System at Full PCS Rated Power at Completion of Preconceptual Design

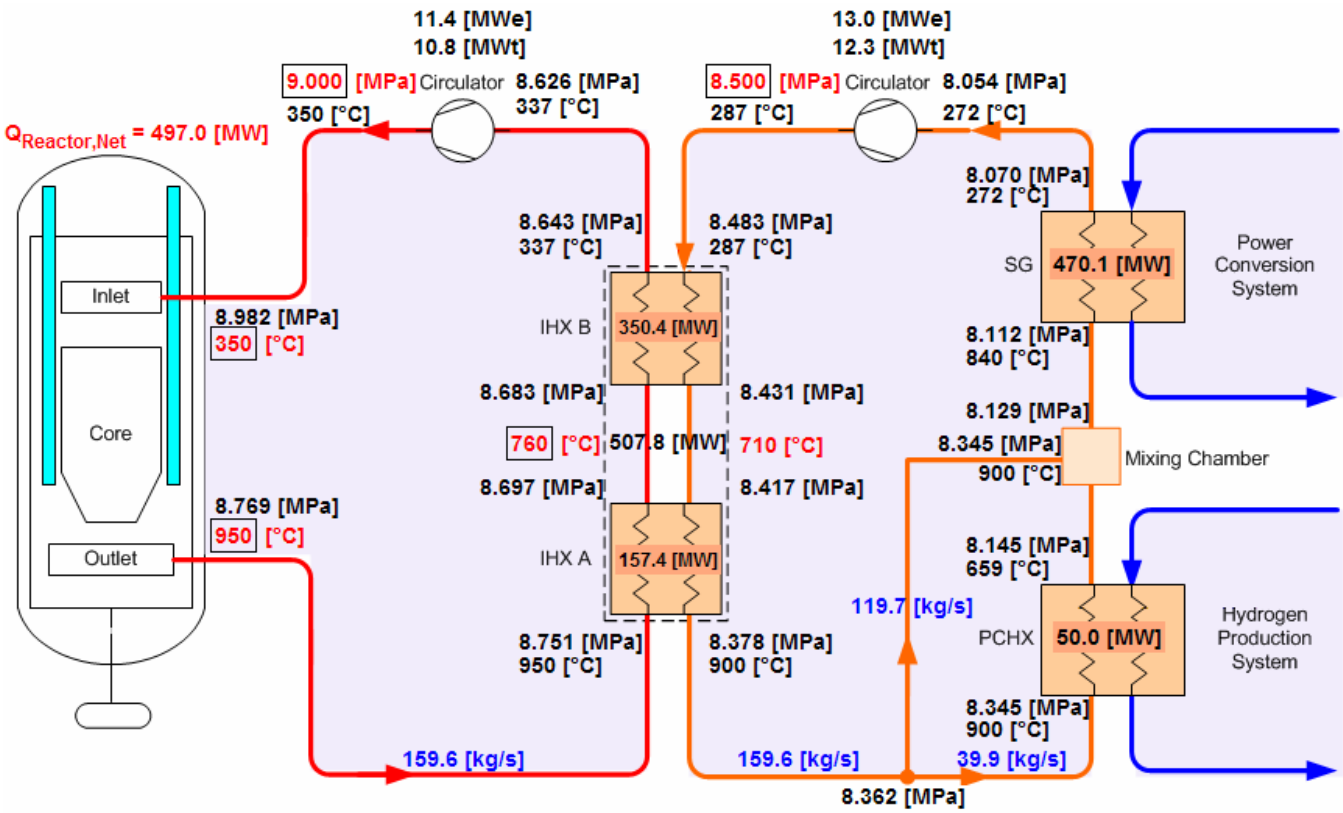

Figure 3.1-7: Heat Transport System with HPS at 50 MWt at Completion of Preconceptual Design

3.2 PLANT SYSTEMS

3.2.1 Work Breakdown Structure

The top level Work Breakdown Structure (WBS) for the NGNP Demonstration Project is shown in Figure 3.2-1. Shown in this figure is the WBS to the third level. (The second-level element Fuel Manufacturing has not yet been developed further.)

In Figure 3.2-2 through Figure 3.2-6, the third level branches of the WBS are shown to the fourth level. (The third-level element Owners Engineer has not yet been developed further.) At the fourth level under most third level branches, references to the five Overall Systems are found. The organization of the plant systems is given in Section 3.2.2.

The WBS in these figures is based upon the baseline WBS for the Preconceptual Design work prepared by INL/BEA [3-11]. It is noted that the WBS will continue to evolve as the project is further defined through Conceptual Design.

A “dictionary” of WBS items is included as Appendix 3A.

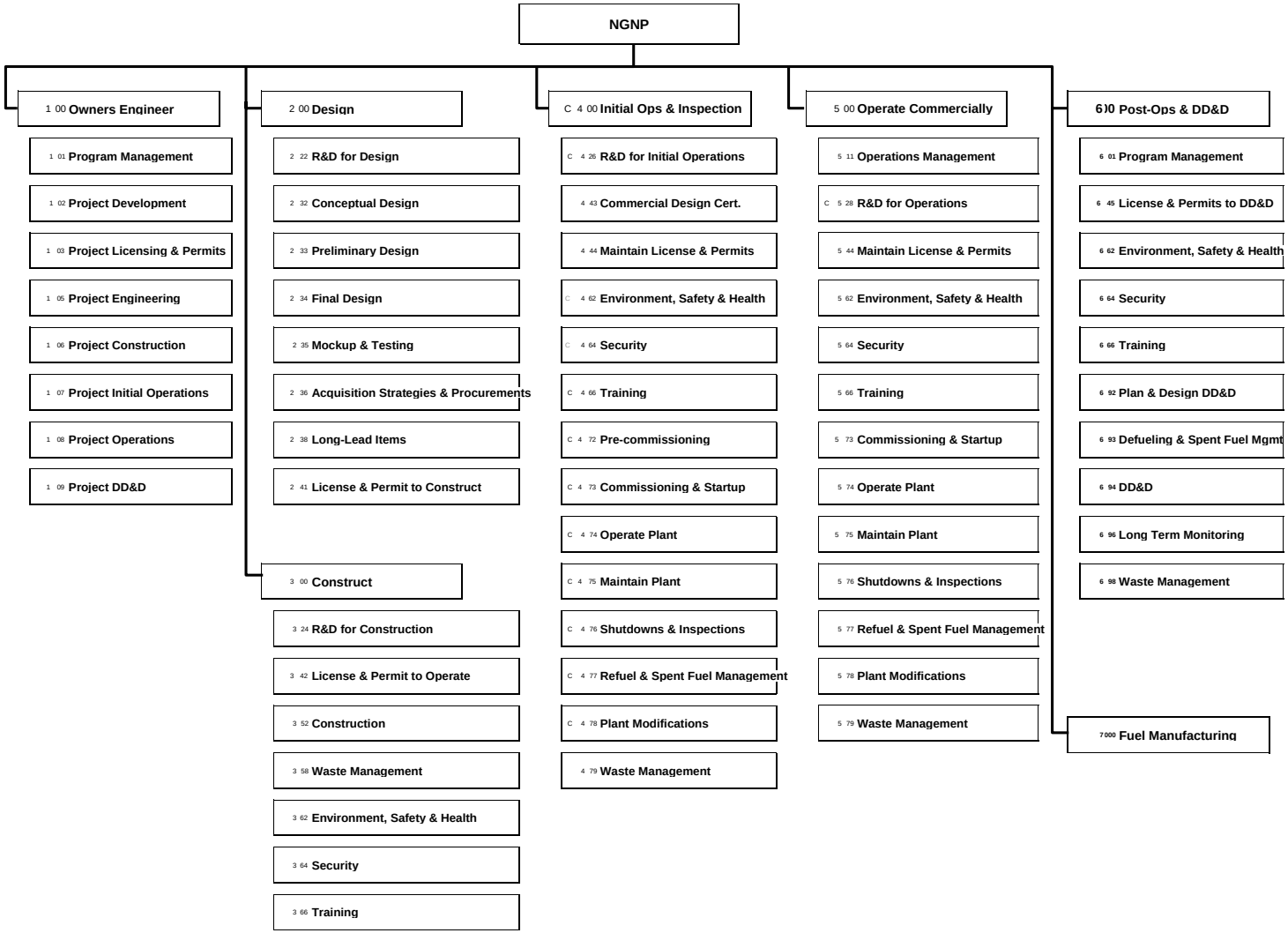

Figure 3.2-1: NGNP Demonstration Project WBS – Top Levels

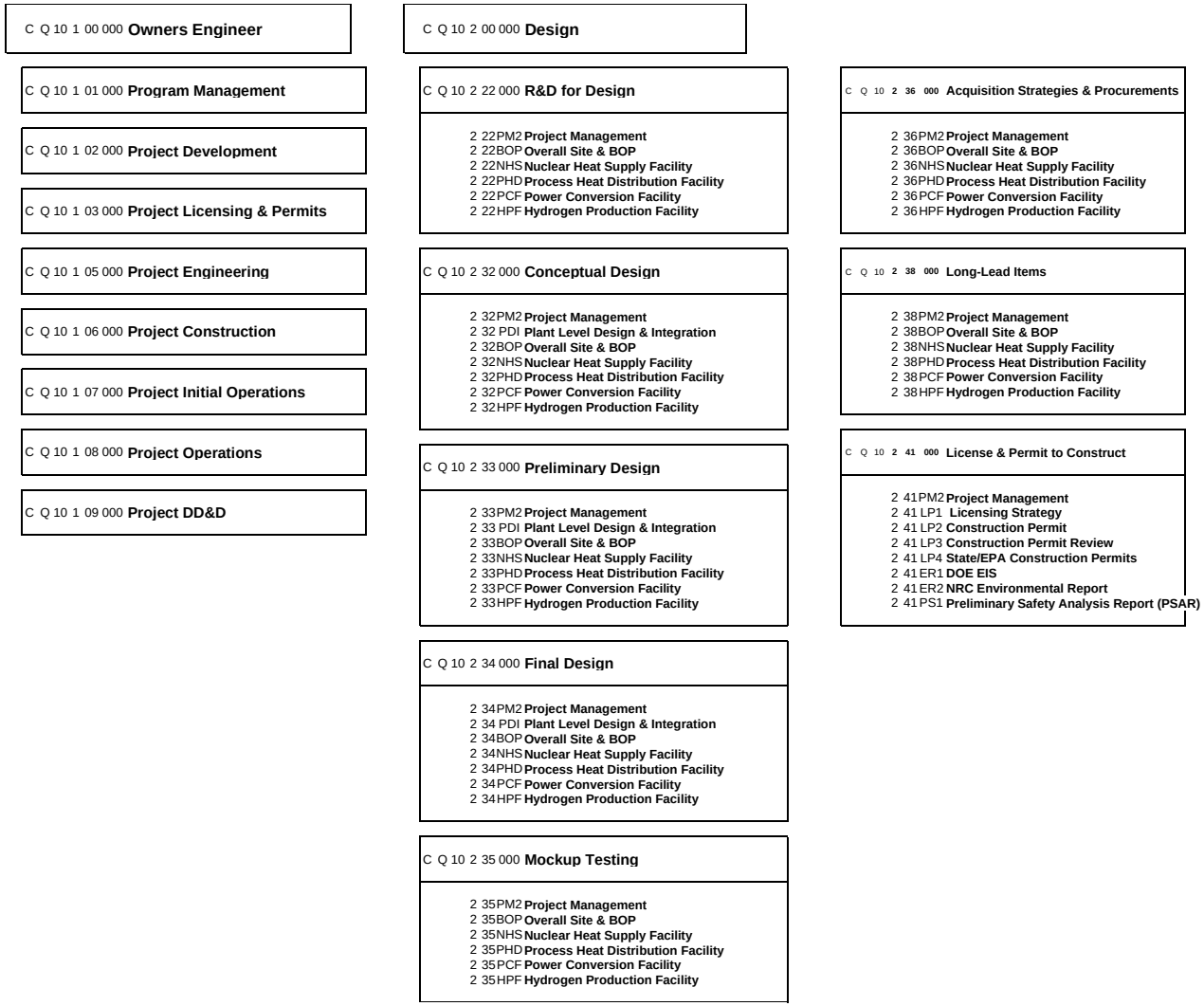

Figure 3.2-2: NGNP Demonstration WBS to Fourth Level - Owners Engineer & Design

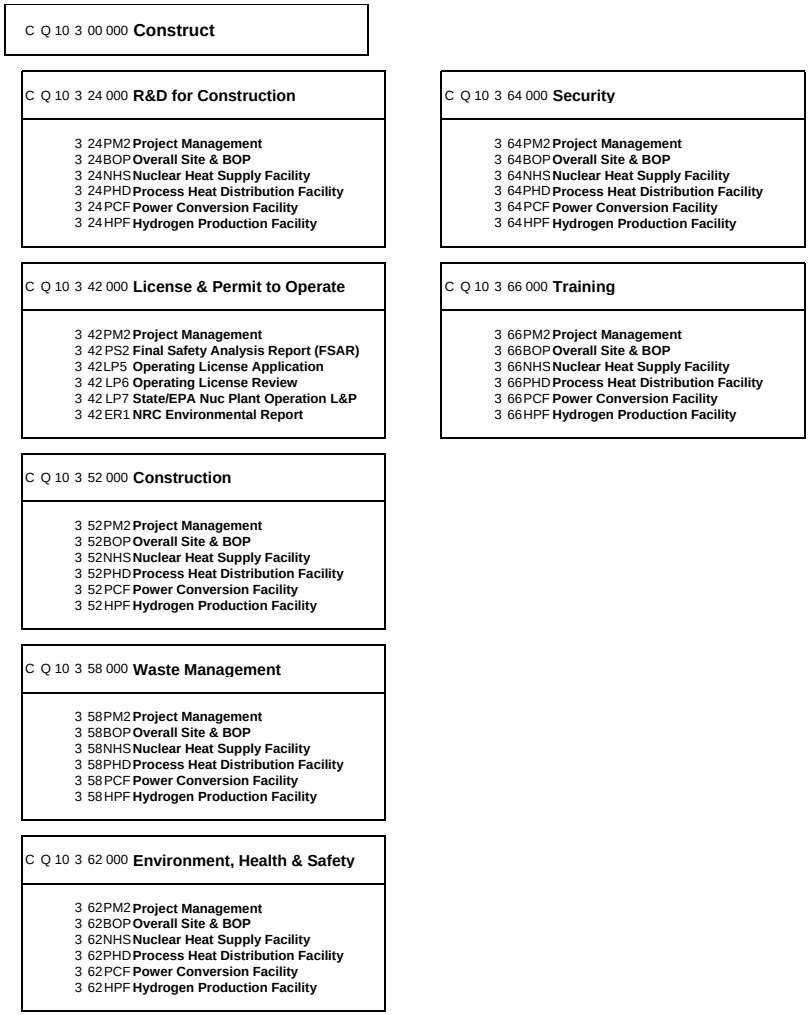

Figure 3.2-3: NGNP Demonstration WBS to Fourth Level - Construct

C Q 10 4 00 000 Initial Ops & Inspection

C Q 10 4 26 000 R&D for Initial Operations

- 4 26PM2 **Project Management**
- 4 26BOP **Overall Site & BOP**
- 4 26NHS **Nuclear Heat Supply Facility**
- 4 26PHD **Process Heat Distribution Facility**
- 4 26PCF **Power Conversion Facility**
- 4 26HPF **Hydrogen Production Facility**

C Q 10 4 43 000 Commercial Design Cert.

- 4 43PM2 **Project Management**
- 4 43PS2 **Final Safety Analysis Report (FSAR) Revision**
- 4 43DC1 **Design Certification Application**
- 4 43DC2 **Design Certification Review**

C Q 10 4 44 000 Maintain License & Permits

- 4 44PM2 **Project Management**
- 4 44 LP8 **Maintain NRC Operating License**
- 4 44 LP9 **Maintain State/EPA Permits**
- 4 44ER2 **Maintain EIS and Environmental Report**

C Q 10 4 62 000 Environment, Health & Safety

- 4 62PM2 **Project Management**
- 4 62BOP **Overall Site & BOP**
- 4 62NHS **Nuclear Heat Supply Facility**
- 4 62PHD **Process Heat Distribution Facility**
- 4 62PCF **Power Conversion Facility**
- 4 62HPF **Hydrogen Production Facility**

C Q 10 4 64 000 Security

- 4 64PM2 **Project Management**
- 4 64BOP **Overall Site & BOP**
- 4 64NHS **Nuclear Heat Supply Facility**
- 4 64PHD **Process Heat Distribution Facility**
- 4 64PCF **Power Conversion Facility**
- 4 64HPF **Hydrogen Production Facility**

C Q 10 4 66 000 Training

- 4 66PM2 **Project Management**
- 4 66BOP **Overall Site & BOP**
- 4 66NHS **Nuclear Heat Supply Facility**
- 4 66PHD **Process Heat Distribution Facility**
- 4 66PCF **Power Conversion Facility**
- 4 66HPF **Hydrogen Production Facility**

C Q 10 4 72 000 Pre-commissioning

- 4 72PM2 **Project Management**
- 4 72BOP **Overall Site & BOP**
- 4 72NHS **Nuclear Heat Supply Facility**
- 4 72PHD **Process Heat Distribution Facility**
- 4 72PCF **Power Conversion Facility**
- 4 72HPF **Hydrogen Production Facility**

C Q 10 4 73 000 Commissioning & Startup

- 4 73PM2 **Project Management**
- 4 73BOP **Overall Site & BOP**
- 4 73NHS **Nuclear Heat Supply Facility**
- 4 73PHD **Process Heat Distribution Facility**
- 4 73PCF **Power Conversion Facility**
- 4 73HPF **Hydrogen Production Facility**

C Q 10 4 74 000 Operate Plant

- 4 74PM2 **Project Management**
- 4 74BOP **Overall Site & BOP**
- 4 74NHS **Nuclear Heat Supply Facility**
- 4 74PHD **Process Heat Distribution Facility**
- 4 74PCF **Power Conversion Facility**
- 4 74HPF **Hydrogen Production Facility**

C Q 10 4 75 000 Maintain Plant

- 4 75PM2 **Project Management**
- 4 75BOP **Overall Site & BOP**
- 4 75NHS **Nuclear Heat Supply Facility**
- 4 75PHD **Process Heat Distribution Facility**
- 4 75PCF **Power Conversion Facility**
- 4 75HPF **Hydrogen Production Facility**

C Q 10 4 76 000 Shutdowns & Inspections

- 4 76PM2 **Project Management**
- 4 76BOP **Overall Site & BOP**
- 4 76NHS **Nuclear Heat Supply Facility**
- 4 76PHD **Process Heat Distribution Facility**
- 4 76PCF **Power Conversion Facility**
- 4 76HPF **Hydrogen Production Facility**

C Q 10 4 77 000 Refuel & Spent Fuel Management

- 4 77PM2 **Project Management**
- 4 77BOP **Overall Site & BOP Facilities**
- 4 77NHS **Nuclear Heat Supply Facility**

C Q 10 4 78 000 Plant Modifications

- 4 78PM2 **Project Management**
- 4 78BOP **Overall Site & BOP**
- 4 78NHS **Nuclear Heat Supply Facility**
- 4 78PHD **Process Heat Distribution Facility**
- 4 78PCF **Power Conversion Facility**
- 4 78HPF **Hydrogen Production Facility**

C Q 10 4 79 000 Waste Management

- 4 79PM2 **Project Management**
- 4 79BOP **Overall Site & BOP**
- 4 79NHS **Nuclear Heat Supply Facility**
- 4 79PHD **Process Heat Distribution Facility**
- 4 79PCF **Power Conversion Facility**
- 4 79HPF **Hydrogen Production Facility**

Figure 3.2-4: NGNP Demonstration WBS to Fourth Level - Initial Ops & Inspection

C Q 10 5 00 000 Operate Commercially

C Q 10 5 11 000 Operations Management

- 5 11 PM0 **Overall Management**
- 5 11 SE1 **Systems Engineering**
- 5 11 **Plus more TBD**

C Q 10 5 28 000 R&D for Operations

- 5 28 PM2 **Project Management**
- 5 28 BOP **Overall Site & BOP**
- 5 28 NHS **Nuclear Heat Supply Facility**
- 5 28 PHD **Process Heat Distribution Facility**
- 5 28 PCF **Power Conversion Facility**
- 5 28 HPF **Hydrogen Production Facility**

C Q 10 5 44 000 Maintain License & Permits

- 5 44 PM2 **Project Management**
- 5 44 LP8 **Maintain NRC Operating License**
- 5 44 LP9 **Maintain State/EPA Permits**
- 5 44 ER2 **Maintain EIS and Environmental Report**

C Q 10 5 62 000 Environment, Health & Safety

- 5 62 PM2 **Project Management**
- 5 62 BOP **Overall Site & BOP**
- 5 62 NHS **Nuclear Heat Supply Facility**
- 5 62 PHD **Process Heat Distribution Facility**
- 5 62 PCF **Power Conversion Facility**
- 5 62 HPF **Hydrogen Production Facility**

C Q 10 5 64 000 Security

- 5 64 PM2 **Project Management**
- 5 64 BOP **Overall Site & BOP**
- 5 64 NHS **Nuclear Heat Supply Facility**
- 5 64 PHD **Process Heat Distribution Facility**
- 5 64 PCF **Power Conversion Facility**
- 5 64 HPF **Hydrogen Production Facility**

C Q 10 5 66 000 Training

- 5 66 PM2 **Project Management**
- 5 66 BOP **Overall Site & BOP**
- 5 66 NHS **Nuclear Heat Supply Facility**
- 5 66 PHD **Process Heat Distribution Facility**
- 5 66 PCF **Power Conversion Facility**
- 5 66 HPF **Hydrogen Production Facility**

C Q 10 5 73 000 Commissioning & Startup

- 5 73 PM2 **Project Management**
- 5 73 BOP **Overall Site & BOP**
- 5 73 NHS **Nuclear Heat Supply Facility**
- 5 73 PHD **Process Heat Distribution Facility**
- 5 73 PCF **Power Conversion Facility**
- 5 73 HPF **Hydrogen Production Facility**

C Q 10 5 74 000 Operate Plant

- 5 74 PM2 **Project Management**
- 5 74 BOP **Overall Site & BOP**
- 5 74 NHS **Nuclear Heat Supply Facility**
- 5 74 PHD **Process Heat Distribution Facility**
- 5 74 PCF **Power Conversion Facility**
- 5 74 HPF **Hydrogen Production Facility**

C Q 10 5 75 000 Maintain Plant

- 5 75 PM2 **Project Management**
- 5 75 BOP **Overall Site & BOP**
- 5 75 NHS **Nuclear Heat Supply Facility**
- 5 75 PHD **Process Heat Distribution Facility**
- 5 75 PCF **Power Conversion Facility**
- 5 75 HPF **Hydrogen Production Facility**

C Q 10 5 76 000 Shutdowns & Inspections

- 5 76 PM2 **Project Management**
- 5 76 BOP **Overall Site & BOP**
- 5 76 NHS **Nuclear Heat Supply Facility**
- 5 76 PHD **Process Heat Distribution Facility**
- 5 76 PCF **Power Conversion Facility**
- 5 76 HPF **Hydrogen Production Facility**

C Q 10 5 77 000 Refuel & Spent Fuel Management

- 5 77 PM2 **Project Management**
- 5 77 BOP **Overall Site & BOP Facilities**
- 5 77 NHS **Nuclear Heat Supply Facility**

C Q 10 5 78 000 Plant Modifications

- 5 78 PM2 **Project Management**
- 5 78 BOP **Overall Site & BOP**
- 5 78 NHS **Nuclear Heat Supply Facility**
- 5 78 PHD **Process Heat Distribution Facility**
- 5 78 PCF **Power Conversion Facility**
- 5 78 HPF **Hydrogen Production Facility**

C Q 10 5 79 000 Waste Management

- 5 79 PM2 **Project Management**
- 5 79 BOP **Overall Site & BOP**
- 5 79 NHS **Nuclear Heat Supply Facility**
- 5 79 PHD **Process Heat Distribution Facility**
- 5 79 PCF **Power Conversion Facility**
- 5 79 HPF **Hydrogen Production Facility**

Figure 3.2-5: NGNP Demonstration WBS to Fourth Level - Operate Commercially

C Q 10 5 00 000 Operate Commercially

C Q 10 5 11 000 Operations Management

- 5 11 PM0 **Overall Management**
- 5 11 SE1 **Systems Engineering**
- 5 11 **Plus more TBD**

C Q 10 5 28 000 R&D for Operations

- 5 28 PM2 **Project Management**
- 5 28 BOP **Overall Site & BOP**
- 5 28 NHS **Nuclear Heat Supply Facility**
- 5 28 PHD **Process Heat Distribution Facility**
- 5 28 PCF **Power Conversion Facility**
- 5 28 HPF **Hydrogen Production Facility**

C Q 10 5 44 000 Maintain License & Permits

- 5 44 PM2 **Project Management**
- 5 44 LP8 **Maintain NRC Operating License**
- 5 44 LP9 **Maintain State/EPA Permits**
- 5 44 ER2 **Maintain EIS and Environmental Report**

C Q 10 5 62 000 Environment, Health & Safety

- 5 62 PM2 **Project Management**
- 5 62 BOP **Overall Site & BOP**
- 5 62 NHS **Nuclear Heat Supply Facility**
- 5 62 PHD **Process Heat Distribution Facility**
- 5 62 PCF **Power Conversion Facility**
- 5 62 HPF **Hydrogen Production Facility**

C Q 10 5 64 000 Security

- 5 64 PM2 **Project Management**
- 5 64 BOP **Overall Site & BOP**
- 5 64 NHS **Nuclear Heat Supply Facility**
- 5 64 PHD **Process Heat Distribution Facility**
- 5 64 PCF **Power Conversion Facility**
- 5 64 HPF **Hydrogen Production Facility**

C Q 10 5 66 000 Training

- 5 66 PM2 **Project Management**
- 5 66 BOP **Overall Site & BOP**
- 5 66 NHS **Nuclear Heat Supply Facility**
- 5 66 PHD **Process Heat Distribution Facility**
- 5 66 PCF **Power Conversion Facility**
- 5 66 HPF **Hydrogen Production Facility**

C Q 10 5 73 000 Commissioning & Startup

- 5 73 PM2 **Project Management**
- 5 73 BOP **Overall Site & BOP**
- 5 73 NHS **Nuclear Heat Supply Facility**
- 5 73 PHD **Process Heat Distribution Facility**
- 5 73 PCF **Power Conversion Facility**
- 5 73 HPF **Hydrogen Production Facility**

C Q 10 5 74 000 Operate Plant

- 5 74 PM2 **Project Management**
- 5 74 BOP **Overall Site & BOP**
- 5 74 NHS **Nuclear Heat Supply Facility**
- 5 74 PHD **Process Heat Distribution Facility**
- 5 74 PCF **Power Conversion Facility**
- 5 74 HPF **Hydrogen Production Facility**

C Q 10 5 75 000 Maintain Plant

- 5 75 PM2 **Project Management**
- 5 75 BOP **Overall Site & BOP**
- 5 75 NHS **Nuclear Heat Supply Facility**
- 5 75 PHD **Process Heat Distribution Facility**
- 5 75 PCF **Power Conversion Facility**
- 5 75 HPF **Hydrogen Production Facility**

C Q 10 5 76 000 Shutdowns & Inspections

- 5 76 PM2 **Project Management**
- 5 76 BOP **Overall Site & BOP**
- 5 76 NHS **Nuclear Heat Supply Facility**
- 5 76 PHD **Process Heat Distribution Facility**
- 5 76 PCF **Power Conversion Facility**
- 5 76 HPF **Hydrogen Production Facility**

C Q 10 5 77 000 Refuel & Spent Fuel Management

- 5 77 PM2 **Project Management**
- 5 77 BOP **Overall Site & BOP Facilities**
- 5 77 NHS **Nuclear Heat Supply Facility**

C Q 10 5 78 000 Plant Modifications

- 5 78 PM2 **Project Management**
- 5 78 BOP **Overall Site & BOP**
- 5 78 NHS **Nuclear Heat Supply Facility**
- 5 78 PHD **Process Heat Distribution Facility**
- 5 78 PCF **Power Conversion Facility**
- 5 78 HPF **Hydrogen Production Facility**

C Q 10 5 79 000 Waste Management

- 5 79 PM2 **Project Management**
- 5 79 BOP **Overall Site & BOP**
- 5 79 NHS **Nuclear Heat Supply Facility**
- 5 79 PHD **Process Heat Distribution Facility**
- 5 79 PCF **Power Conversion Facility**
- 5 79 HPF **Hydrogen Production Facility**

Figure 3.2-6: NGNP Demonstration WBS to Fourth Level – Post Ops & DD&D

3.2.2 Organizational Structure of NGNP

There are four Facilities plus the Balance of Plant (BOP), as shown in Table 3.2-1, which in addition to the site, comprise the NGNP.

Table 3.2-1: Organization of NGNP Facilities

Nuclear Heat Supply Facility
Heat Transport Facility
Hydrogen Production Facility
Power Conversion Facility
Balance of Plant

Each Facility is made up of two parts: systems and buildings & structures, excepting the Heat Transport Facility whose systems are located in the NHS Buildings & Structures, as shown in Figure 3.2-7.

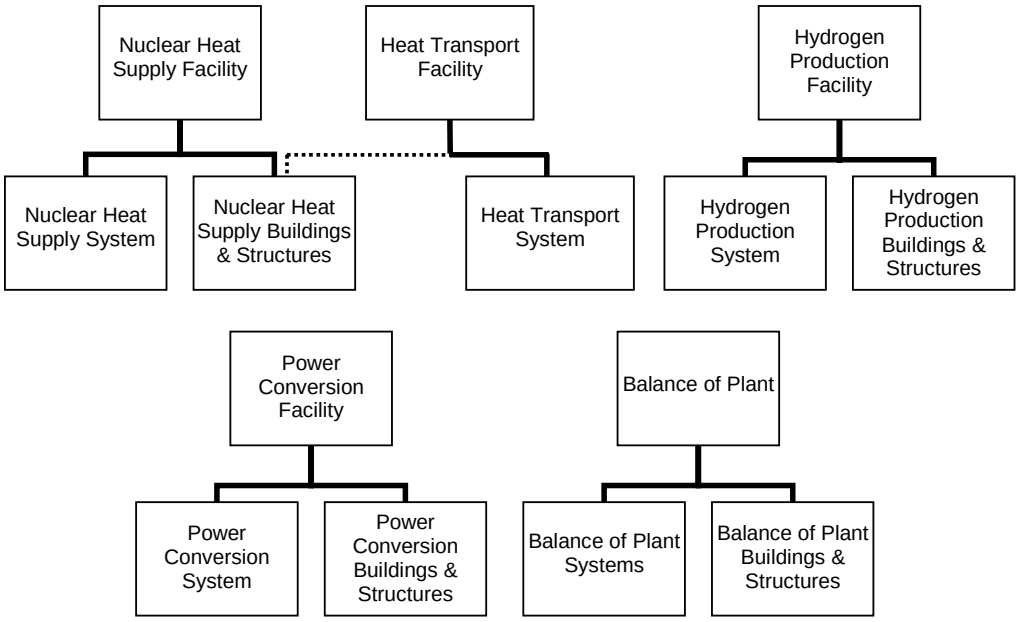

Figure 3.2-7: Organization of NGNP Facilities

The systems within each Facility are the Overall Systems. There are five Overall Systems as itemized in Table 3.2-2. These make up the top level organization of the functioning portion of the plant. The site, buildings and structures are not developed further in Section 3. Detailed descriptions of the Site, Building and Structures are in Section 10.

Table 3.2-2: Organization of NGNP Overall Systems

Nuclear Heat Supply System
Heat Transport System
Hydrogen Production System
Power Conversion System
Balance of Plant Systems

Under the five Overall Systems, the next level organization is as shown in Figure 3.2-8 through Figure 3.2-12. The next level systems in the figures are the plant Major Systems.

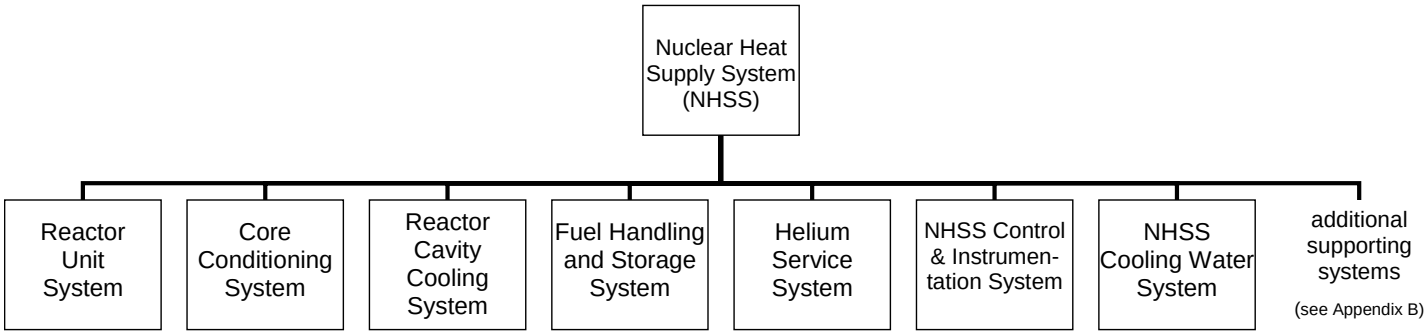

Figure 3.2-8: Organization of Nuclear Heat Supply System

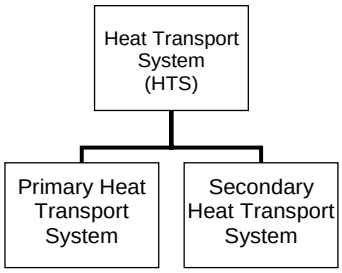

Figure 3.2-9: Organization of Heat Transport System

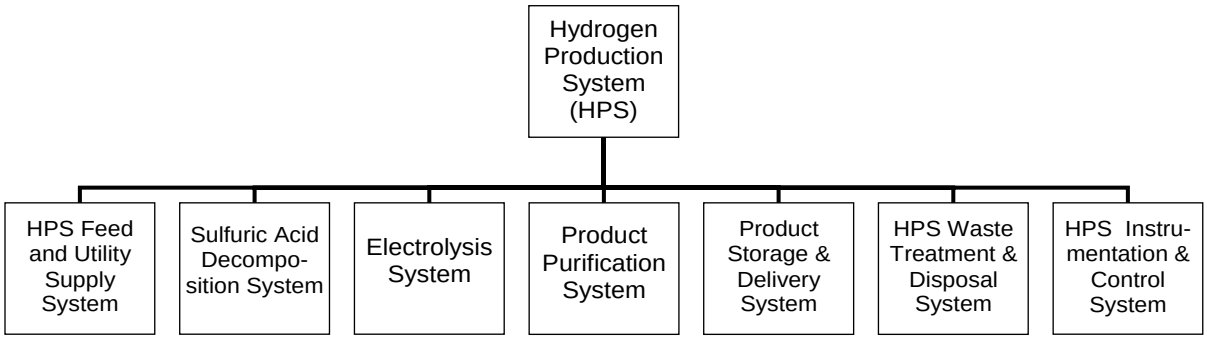

Figure 3.2-10: Organization of Hydrogen Production System

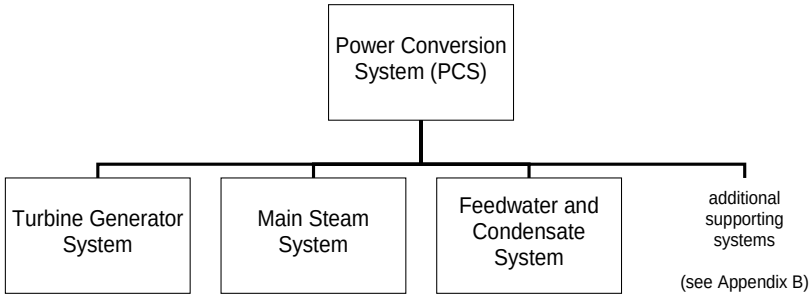

Figure 3.2-11: Organization of Power Conversion System

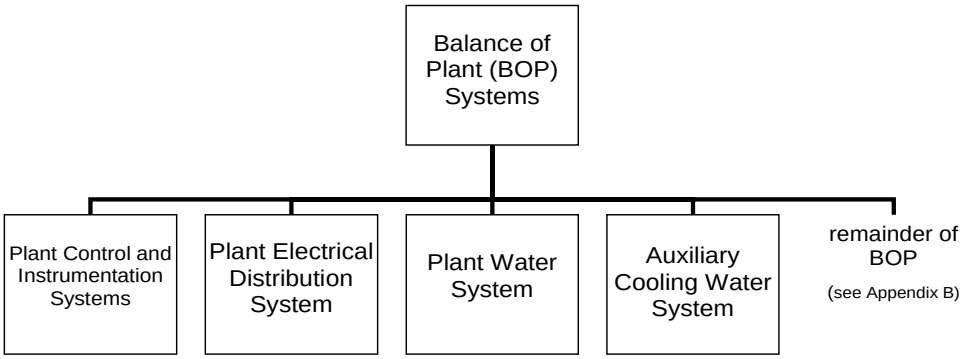

Figure 3.2-12: Organization of Balance of Plant Systems

The complete preconceptual organization of systems, components, buildings and structures is shown in Appendix 3B.

3.2.3 Critical SSCs

Critical Systems, Structures and Components (SSCs) are defined as those components that are not commercially available or do not have proven industry experience. It is implied that critical SSCs are in need of technology development (R&D) or at the minimum design development. In Table 3.2-3 the critical SSCs are identified and defined down to the system level and as necessary defined down to the component level.

Table 3.2-3: Critical Systems, Structures and Components

Nuclear Heat Supply System (NHSS)

- Reactor Unit System
  - Fuel Elements (spheres)
  - Core Internal Structure (metallic, graphite, ceramic)
  - Reactivity Control System
  - Reactor Pressure Vessel
- Core Conditioning System
- Reactor Cavity Cooling System
- Fuel Handling and Storage System
- Helium Service System

Heat Transport System (HTS)

- Primary Heat Transport System (PHTS)
  - PHTS Circulator
  - PHTS Valve
  - Intermediate Heat Exchanger (IHX)
    - IHX Core
    - Internal Ducts, Supports and Insulation
    - IHX Vessel, Supports and Insulation
  - Piping (Reactor to IHX - both hot and cold legs)
    - Pressure Boundary Piping, Including External Supports and Insulation
    - Piping Internal Ducts, Supports and Insulation
- Secondary Heat Transport System (SHTS)
  - SHTS Circulator
  - Helium Isolation Valves (if required)
  - Piping (both hot and cold legs, plus PCHX to SG)
    - Pressure Boundary Piping, Including External Supports and Insulation
    - Piping Internal Ducts, Supports and Insulation

- o SHTS Flow Coupling and Mixer

Hydrogen Production System (HPS)

- Sulfuric Acid Decomposition System
  - o Sulfuric Acid Decomposition Reactor (PCHX)
- Electrolysis System
  - o Electrolyzer

Power Conversion System (PCS)

- Main Steam System
  - o Steam Generator

Balance of Plant (BOP) Systems

none identified

3.2.4 Nomenclature

A graphical summary of the nomenclature used for the plant facilities, systems, structures and components is presented in Figure 3.2-13. Refer to the section on Definitions for further descriptions.

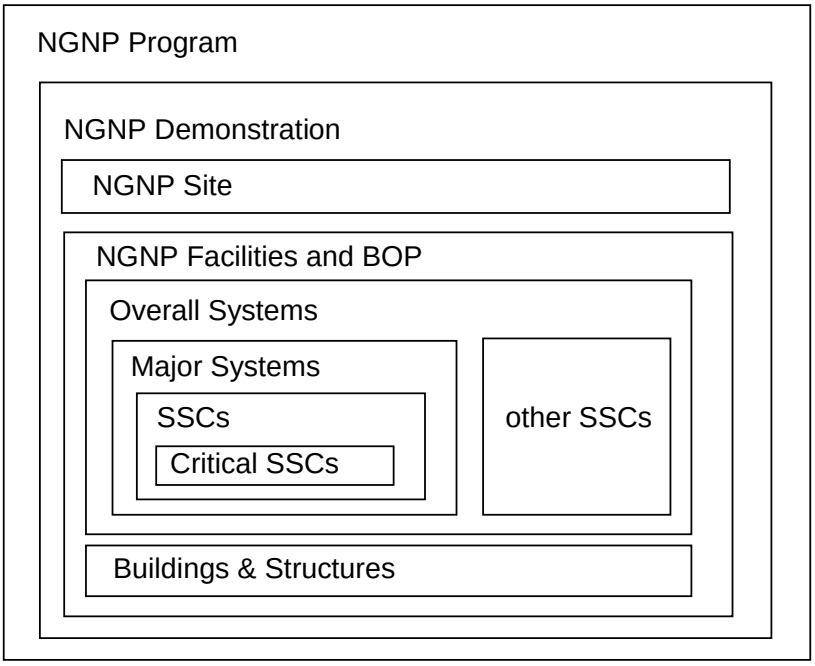

Figure 3.2-13: Relation of Nomenclature

3.3 TOP LEVEL PLANT DESIGN REQUIREMENTS

The top level requirements for the NGNP Project were discussed in PCDR Section 2. These provide design, licensing and mission-specific requirements for the engineering design (see Definitions section). The top level requirements are allocated to the Overall Systems in Table 3.3-1 with requirements shaded by system.

Table 3.3-1: Allocation of Top Level Requirements

Top Level Requirements ↓ / Overall Systems →	Nuclear Heat Supply System	Heat Transport System	Hydrogen Production System	Power Conversion System	Balance of Plant Systems
1. User Requirements for the NGNP					
1.1 Overall NGNP Design Requirements					
1.1.1 NGNP Mission					
The NGNP shall demonstrate the commercial-scale production of hydrogen from nuclear energy supplied by a PBMR H2 PHP NHSS with a nominal rating of 500 MWt.	■	■	■	■	■
The NGNP prototype shall support commercial deployment of a Nuclear Process Heat Plant with minimal re-design.	■	■	■	■	■
1.1.2 NGNP Licensing					
The NGNP shall be licensed by the NRC.	■	■	■	■	■
1.1.3 NGNP Configuration					
The NGNP shall consist of a NHSS , HPS, PCS and BOP facilities.	■	■	■	■	■
The NHSS shall be prototypic of the PBMR PHP NHSS and capable of supplying process heat to the HPS and the PCS facilities.	■	■	■	■	
HPS and PCS facilities shall be designed and configured to support the NGNP project mission (as opposed to optimized systems within an integrated hydrogen production plant).		■	■	■	■
The PCS facility shall be capable of utilizing rated NHSS output.		■		■	
The HPS facility shall be capable of demonstrating a commercial-scale Hybrid Sulfur (HyS) hydrogen production process train with a nominal rating of 50MWt, as well as other thermo-chemical and water splitting hydrogen production process trains.		■	■		
The BOP facility shall provide common support services to two or more of the NHSS, HPS and PCS facilities, e.g., central control room, warehouses, administration, medical facilities. BOP facilities are not necessarily contiguous.	■	■	■	■	■
The NGNP shall be designed to physically separate the NHSS from the HPS, PCS and BOP. The NHSS shall contain all systems, structures and components that are assigned nuclear safety functions. The HPS shall contain the hydrogen production equipment, and the PCS shall contain the electricity generation equipment.	■	■	■	■	■
The NGNP NHSS shall be designed, procured and constructed to nuclear standards, while the HPS, PCS and BOP facilities shall be constructed to conventional (non-nuclear) standards.	■	■	■	■	■
1.1.4 NGNP Control/Man-Machine Interface					
The central control room for the NGNP shall be located in the BOP.					■

Top Level Requirements ↓ / Overall Systems →	Nuclear Heat Supply System	Heat Transport System	Hydrogen Production System	Power Conversion System	Balance of Plant Systems
The central control room shall incorporate features necessary to facilitate start-up, shutdown, monitoring, and control and shall provide for operator shutdown of major systems and components to limit investment risk and protect personnel.					
The design of major control systems shall incorporate the means to detect and diagnose internal malfunctions for Anticipated Operational Occurrences (AOOs) and Design Basis Events (DBEs).					
Provisions shall be included in the control system design to automatically identify and document the sequence of significant events (e.g., control inputs, changes in the operational state of major systems and components, changes in major system parameters, protective trips, etc.) that occur during plant operation.					
The design of control systems shall be applicable to commercial plants and therefore shall facilitate the sequential addition of modules and the independent operation of modules at different hydrogen production and/or electric power levels.					
1.1.5 NGNP Staffing					
The direct NGNP staff organization shall not exceed [TBD] full-time equivalent people. Allocations to the operations, maintenance, technical, and administrative divisions shall be identified for the NHSS, HPS, PCS and BOP facilities.					
1.1.6 NGNP Service Life					
The plant shall be designed for an operating life of 60 calendar years from authorization to operate.					
The plant shall be designed to permit replacement of life-limited, and/or failed components over its lifetime.					
1.1.7 NGNP Reliability & Availability					
1.1.7.1 Capacity Factor					
Excluding NGNP mission-specific outages for inspection and testing, the design capacity factor averaged over the plant lifetime shall be at least [TBD]% when modeled with equipment mean time to failure and mean time to repair data for the same or similar systems and/or components.					

Top Level Requirements ↓ / Overall Systems →	Nuclear Heat Supply System	Heat Transport System	Hydrogen Production System	Power Conversion System	Balance of Plant Systems
1.1.7.2 Planned Outages					
Excluding NGNP mission-specific outages for inspection and testing, the capacity factor loss due to planned outages averaged over the lifetime of the plant shall not exceed [TBD]%, including all planned inspection and maintenance activities that must be accomplished during shut down.					
1.1.7.3 Investment Protection					
Excluding NGNP mission-specific outages for inspection and testing, the calculated capacity factor loss due to unplanned outages averaged over the lifetime of the plant shall not exceed [TBD]%.					
Excluding NGNP mission-specific outages for inspection and testing, unplanned outages of six months or greater shall not contribute more than [10%] of the capacity factor loss from all unplanned outages, including those not expected to occur in an individual plant's lifetime.					
1.1.8 Site-Specific Parameters & External Interfaces					
1.1.8.1 NGNP Site Parameters					
The NGNP shall be designed for INL site conditions.					
1.1.8.1 External Interfaces					
The site shall provide for the delivery and storage of hydrogen production feedstock including feedstock water, sulfuric acid, catalyst and processing chemicals as well as plant spare parts, replacement electrolytic cells and decomposer elements.					
1.1.9 NGNP Fabrication/Construction					
Advanced techniques, such as the use of factory or field-fabricated and -assembled modules containing portions of systems and/or structures, shall be utilized, as appropriate, to reduce erection costs and schedule risks and to enhance quality control.					
The design of buildings and equipment shall facilitate plant construction and the installation, repair, and replacement of equipment.					
1.1.10 NGNP Decommissioning					
Upon completion of its useful life, the NHSS shall be put into a condition of safe storage for 10 years and then decontaminated and dismantled to allow continued use of the land as a power plant or industrial site.					
1.2 NHSS Facility Design Requirements					
1.2.1 NHSS Design Standardization and Certification					
The NHSS shall be designed to nuclear standards for NRC design certification of the standard PBMR PHP NHSS.					

Top Level Requirements ↓ / Overall Systems →	Nuclear Heat Supply System	Heat Transport System	Hydrogen Production System	Power Conversion System	Balance of Plant Systems
Design, full-scale testing, and licensing documentation shall be developed to support design certification of NHSS that accommodates the multi-module commercial plant configurations and expansion options.					
NHSS site suitability shall envelope the conditions for potential commercial sites as well as INL site conditions.					
1.2.1.1 Special External Events					
The NHSS design shall accommodate the reference aircraft impact, within the provisions related to BDBE.					
The NHSS design shall accommodate the reference external detonation shock pressure wave					
1.2.1.1 Seismic Design					
The NHSS shall be designed for a reference safe shutdown earthquake (SSE) horizontal peak ground acceleration (PGA) of 0.3g.					
The NHSS shall be designed such that the minimum level at which a shutdown is required to evaluate the condition of the plant following an earthquake shall be 0.1g PGA.					
A seismic margin assessment (SMA) shall be performed to demonstrate that there is seismic margin in the NHSS beyond the design level SSE. The seismic margin earthquake (SME) used in the SMA process shall be the NUREG/CR-0098 median shape curve anchored to a 0.5g PGA.					
1.2.2 NHSS Parameters and Performance					
The NHSS design parameters shall be prototypic of the PBMR NHSS which uses helium as the heat transfer medium in both the primary and secondary loops and has a nominal rating of about 500 MWt.					
The NHSS design shall accommodate the commercial PBMR PHP plant lifetime design duty cycle.					
1.2.3 NHSS Configuration					
Within the constraints of its mission, the NHSS shall be designed as a prototype for the commercial PBMR PHP, and therefore:					
o The NHSS design shall accommodate plant expansion and new unit startup from an initial configuration of one or more NHSSs without interfering with production operations already in service.					
o The NHSS shall be capable of operating independently (i.e., in the commercial plant, the operating status of one NHSS shall not affect the operating status of other NHSS).					

Top Level Requirements ↓ / Overall Systems →	Nuclear Heat Supply System	Heat Transport System	Hydrogen Production System	Power Conversion System	Balance of Plant Systems
1.2.4 NHSS Fuel					
1.2.4.1 Fuel Cycle					
The fuel shall be as developed for the PBMR DPP wherein TRISO-coated UO_2 fuel particles are embedded in spherical graphite elements or "pebbles".					
The fuel cycle shall adapt LEU to achieve optimum burnup plus overall core and fuel performance.					
1.2.4.2 Fuel Handling, Storage and Waste					
The fuel handling system shall be as developed for the PBMR DPP wherein fuel pebbles are circulated through the core to effect on-line refueling.					
The capacity of the spent fuel storage facility shall be consistent with the design fuel cycle and adequate to store spent fuel from 10 years of plant operation, plus one full core.					
The design of the spent fuel storage facility shall facilitate expansion without disrupting hydrogen production and electricity generation.					
The NHSS design shall be such that the volume of low level radioactive dry and wet waste, as shipped off-site, shall be less than [TBD] m^3 annually.					
1.2.5 NHSS Safety & Licensing					
1.2.5.1 Safety and Licensing Design Basis					
The NHSS shall be designed in accordance with the generic top-level, nuclear regulatory criteria that are direct and quantitative measures of nuclear-related risks and consequences, plus all applicable governmental codes and regulations.					
The NHSS shall meet the top-level regulatory criteria without credit for sheltering or evacuating the public beyond the plant's exclusion area boundary, with the intended result that the Emergency Planning Zone (EPZ) is limited to the Exclusion Area Boundary (EAB).					
The NHSS shall meet the top level regulatory criteria without reliance on prompt operator action, the control room or its contents, including the automated plant process control system, or on auxiliary power supplies (other than batteries).					

Top Level Requirements ↓ / Overall Systems →	Nuclear Heat Supply System	Heat Transport System	Hydrogen Production System	Power Conversion System	Balance of Plant Systems
Design requirements supporting safety and licensing objectives, that are incremental to those employed in conventional power plant design, construction, operation and maintenance and quality assurance practices, shall be developed using the principles of risk-informed, performance-based regulation.					
The NHSS shall be equipped with provisions to safely shutdown the reactor in the unlikely event the central control room becomes uninhabitable.					
1.2.5.2 Testing to Support Licensing					
The plant commissioning shall include testing to support Design Certification for the follow-on commercial PBMR PHP.					
1.2.5.3 Occupational Radiation Exposure Control					
The NHSS shall be designed so that a minimum number of personnel are exposed to ionizing radiation and the aggregate occupational radiation dose can be maintained below [TBD] person-rem/GWt-year averaged over the life of the plant.					
The incremental capital cost to be used for radiation dose reduction design evaluations shall be $[TBD] per person-rem/year of avoided exposure.					
1.2.6 NHSS Reliability & Availability					
1.2.6.1 Capacity Factor					
Excluding NGNP mission-specific outages for inspection and testing, the NHSS design capacity factor for supplying process heat averaged over the plant lifetime shall be at least [TBD]% when modeled with equipment mean time to failure and mean time to repair data for the same or similar systems and/or components.					
1.2.6.2 Planned Outages					
Excluding NGNP mission-specific outages for inspection and testing, the capacity factor loss due to NHSS planned outages averaged over the lifetime of the plant shall not exceed [TBD]%, including all planned inspection and maintenance activities that must be accomplished with the reactor shut down.					
1.2.6.3 NHSS Investment Protection					
Excluding NGNP mission-specific outages for inspection and testing, the calculated capacity factor loss due to unplanned NHSS outages averaged over the lifetime of the plant shall not exceed [TBD]%.					

Top Level Requirements ↓ / Overall Systems →	Nuclear Heat Supply System	Heat Transport System	Hydrogen Production System	Power Conversion System	Balance of Plant Systems
Excluding NGNP mission-specific outages for inspection and testing, unplanned NHSS outages of six months or greater shall not contribute more than [10%] of the capacity factor loss from all unplanned outages, including those not expected to occur in an individual plant's lifetime.	■	■			■
1.2.7 NHSS Maintenance & In-Service Inspection					
1.2.7.1 NHSS Maintenance Requirements					
The NHSS design shall include provisions for monitoring equipment status, configuration, and performance and for detecting and diagnosing malfunctions as a basis for predictive maintenance plans and decision making.	■	■			
The NHSS shall be designed to allow all active components and heat exchangers within the helium pressure boundary to be removed and reinstalled to make possible inspection, repair and replacement.	■	■			■
1.2.7.2 NHSS In-Service Inspection					
The design shall provide access to the primary and secondary loop pressure boundary to permit in-service inspection as required by appropriate sections of the ASME B&PV Code.	■	■			■
1.3 HPS Facility Design Requirements					
1.3.1 HPS Parameters and Performance					
The HPS shall receive process helium from the NHSS at about 900°C and utilize heat at a rate of up to 50MWt in the production of hydrogen via the HyS process.		■	■		
HPS process efficiency shall be about [40] % HHV.			■		
The HPS design shall accommodate the following duty cycle:					
[LATER]			■		
1.3.2 HPS Configuration					
The HPS facility shall be separated from the NHSS consistent with commercial plant economic and risk tradeoffs.	■	■	■		
The interfaces between the HPS and the NHSS shall be designed to ensure that failures or upset conditions in the HPS do not result in failures or adverse impacts to the NHSS.	■	■	■		
The HPS facility shall provide for storage of feedstock, e.g., water, and makeup chemicals such as sulfuric acid.			■		■
The HPP shall include all necessary pretreatment or conditioning of readily available raw materials needed for the process (e.g. water treatment).			■		■
Hydrogen produced in the HPS shall be distributed by pipeline.			■		

Top Level Requirements ↓ / Overall Systems →	Nuclear Heat Supply System	Heat Transport System	Hydrogen Production System	Power Conversion System	Balance of Plant Systems
The hydrogen delivery pressure shall be 45 bar (650 psig).					
No central storage is included at the hydrogen production plants other than buffer storage, as required for efficient operations.					
The hydrogen product gas shall have purity levels consistent with current industry standards for bulk hydrogen applications.					
The interface system between the NHSS and the HPS shall be designed to ensure that tritium migration into the HPS will be limited, such that the maximum amount of tritium released from the integrated NHSS facilities or found in drinking water does not exceed EPA standards.					
The total concentration of radioactive contaminants in the hydrogen product gas and associated hydrogen production systems shall be minimized to ensure that worker and public dose limits do not exceed NRC regulatory limits required for monitoring.					
The oxygen byproduct gas shall have purity levels consistent with current industry standards for bulk oxygen applications. Provisions shall be included for the purification, cooling and venting or shipping of the oxygen byproduct.					
1.3.3 HPS Waste					
The HPS design shall be such that the volume of waste shipped off-site shall be less than [TBD] m^3 annually.					
A means of disposing (such as flaring) of out-of-specification hydrogen product during upsets or startup/shutdown shall be included.					
1.3.4 HPS Safety & Licensing					
The hydrogen production facilities, including the conversion, storage, and distribution systems, shall comply with the requirements of 29 CFR 1910.103, Occupational Safety and Health Standards, Subpart H - Hazardous Materials, Hydrogen.					
In the event that the HPS facility also produces and stores significant quantities of oxygen, the requirements of 29 CFR 1910.104, Oxygen, shall be applied.					
The design, operation and maintenance of the HPS shall comply with 29CFR 1910.119, “Process Safety Management of Highly Hazardous Chemicals”.					

Top Level Requirements ↓ / Overall Systems →	Nuclear Heat Supply System	Heat Transport System	Hydrogen Production System	Power Conversion System	Balance of Plant Systems
1.3.5 HPS Reliability & Availability					
1.3.5.1 Capacity Factor					
Excluding NGNP mission-specific outages for inspection and testing, the HPS design capacity factor for hydrogen production averaged over the plant lifetime shall be at least [TBD]% when modeled with equipment mean time to failure and mean time to repair data for the same or similar systems and/or components.					
1.3.5.2 Planned Outages					
Excluding NGNP mission-specific outages for inspection and testing, the capacity factor loss due to HPS planned outages averaged over the lifetime of the plant shall not exceed [TBD] %, including all planned inspection and maintenance activities that must be accomplished with the HPS shut down.					
1.3.5.3 HPS Investment Protection					
Excluding NGNP mission-specific outages for inspection and testing, the calculated capacity factor loss due to unplanned HPS outages averaged over the lifetime of the plant shall not exceed [TBD] %.					
1.3.6 HPS Maintenance & ISI					
1.3.6.1 HPS Maintenance Requirements					
The HPS shall be designed to allow all components to be removed and reinstalled to make possible inspection, repair and replacement.					
The HPS design shall include provisions for monitoring equipment status, configuration, and performance and for detecting and diagnosing malfunctions as a basis for predictive maintenance plans and decision making.					
The plant design shall provide storage facilities for an adequate amount of spare parts as determined by a preventive maintenance and facility availability plan.					
1.3.6.2 HPS In-Service Inspection					
The HPS design shall provide access to the pressure boundary to permit in-service inspection as required by appropriate sections of the ASME B&PV Code.					
1.4 PCS Facility Design Requirements					
1.4.1 PCS Parameters and Performance					
In full electricity generation mode, the PCS shall receive process helium from the NHSS at about 900°C and utilize the rated capacity of the NHSS in the generation of electricity via a Rankine cycle.					

Top Level Requirements ↓ / Overall Systems →	Nuclear Heat Supply System	Heat Transport System	Hydrogen Production System	Power Conversion System	Balance of Plant Systems
In rated hydrogen production (cogeneration) mode, the PCS shall receive process helium from HPS at about [700]°C and utilize up to about 450MWt in the generation of electricity via a Rankine cycle.					
PCS cycle efficiency shall be about [40]%					
The PCS design shall accommodate the following duty cycle: [LATER]					
1.4.2 PCS Configuration					
The PCS facility shall be separated from the NHSS in a manner consistent with commercial plant economic and risk tradeoffs.					
A steam generator shall receive process helium and supply steam to a conventional single reheat turbine-generator-condenser system.					
1.4.3 PCS Reliability & Availability					
1.4.3.1 Capacity Factor					
Excluding NGNP mission-specific outages for inspection and testing, the PCS design capacity factor for electricity generation averaged over the plant lifetime shall be at least [TBD]% when modeled with equipment mean time to failure and mean time to repair data for the same or similar systems and/or components.					
1.4.3.2 Planned Outages					
Excluding NGNP mission-specific outages for inspection and testing, the capacity factor loss due to PCS planned outages averaged over the lifetime of the plant shall not exceed [TBD]%, including all planned inspection and maintenance activities that must be accomplished with the PCS shut down.					
1.4.3.3 PCS Investment Protection					
Excluding NGNP mission-specific outages for inspection and testing, the calculated capacity factor loss due to unplanned PCS outages averaged over the lifetime of the plant shall not exceed [TBD] %.					
1.4.4 PCS Maintenance & ISI					
1.4.4.1 PCS Maintenance Requirements					
The PCS shall be designed to allow all components to be removed and reinstalled to make possible inspection, repair and replacement.					
The PCS design shall include provisions for monitoring equipment status, configuration, and performance and for detecting and diagnosing malfunctions as a basis for predictive maintenance plans and decision making.					

Top Level Requirements ↓ / Overall Systems →	Nuclear Heat Supply System	Heat Transport System	Hydrogen Production System	Power Conversion System	Balance of Plant Systems
1.4.4.2 PCS In-Service Inspection					
The PCS design shall provide access to permit in-service inspection as required by appropriate sections of the ASME B&PV Code.					
2. Regulatory Requirements for the NGNP					
2.1 Federal Regulatory Requirements					
2.1.1 Top Level Regulatory Criteria					
The NGNP project shall use a risk-informed, performance-based approach to regulatory decision-making.					
The following primary resources shall be used to develop top-level regulatory criteria (TLRC) appropriate for the NGNP to establish limits on the risk or consequences of potential radiological releases:					
o Reactor Safety Goal Policy Statement (51 CFR 28044): This policy limits public safety risk resulting from nuclear power plant operation. Limits are					
o 10 CFR Part 20, "Standards for Protection against Radiation (Subpart D, Radiation Dose Limits for Individual Members of the Public)": These criteria limit the dose consequences of releases associated with relatively high frequency events that occur as part of normal plant operations.					
o 10 CFR Part 50, Appendix I, "Numerical Guides for Design Objectives and Limiting Conditions for Operation to Meet the Criterion "As Low as is Reasonably Achievable" for Radioactive Material in Light-Water-Cooled Nuclear Power Reactor Effluents": This Appendix provides explicit limits on doses from planned discharges that meet the NRC's definition of "as low as is reasonably achievable".					
o 40 CFR Part 190, "Environmental Radiation Protection Standards for Nuclear Power Operations": These standards provide the generally applicable exposure limits for members of the general public from all operations except transportation and disposal or storage of spent fuel associated with the generation of electrical power by nuclear power plants.					
o 10 CFR Part 100, "Reactor Site Criteria (Subpart B, Evaluation Factors for Stationary Power Reactor Site Applications on or After January 10, 1997)": §100.20 defines the Exclusion Area Boundary and Low Population Zones of a nuclear reactor site, and requires that the combination of the site and reactor located on that site be capable of meeting the dose and dose rate limitations set forth in 10 CFR §50.34(a).					

Top Level Requirements ↓ / Overall Systems →	Nuclear Heat Supply System	Heat Transport System	Hydrogen Production System	Power Conversion System	Balance of Plant Systems
o 10 CFR §50.34(a)(ii)(D), "Contents of Applications: Technical Information (Radiological Dose Consequences)": This section of the regulation specifies dose limits for evaluating the acceptance of the engineered safety features that are intended to mitigate the radiological consequences of accidents. These dose limits are consistent with those utilized in 10 CFR Part 100 for determining the extent of the EAB and EPZ.					
2.1.2 TLRC Related to Anticipated Operational Occurrences					
Appendix A to 10 CFR Part 50 shall be interpreted to define anticipated operational occurrences (AOOs) as "those conditions of normal operation expected to occur one or more times during the life of a nuclear power plant". AOOs shall be interpreted to include all events of frequency less than $1.0x10^{-2}$ per plant year.					
The NGNP NHSS shall be designed to meet the more restrictive of the following offsite doses to the public:					
o The annual dose equivalent to a member of the general public from planned uranium fuel cycle operations shall be <25mrem to the whole body, <75mrem to the thyroid, and <25mrem to any other organ. (EPA: 40 CFR §190.10(a)).					
o The total effective dose equivalent (TEDE) for a member of the public be limited to 100mrem per year and 2mrem in any one hour, in unrestricted areas. (NRC: 10 CFR §20.1301).					
Dose, dose rate limits and limits on planned releases from operation of NGNP radwaste systems during normal operation shall maintain exposures as low as reasonably achievable (ALARA). (NRC: 10 CFR Part 50, Appendix I). Such ALARA limits shall be interpreted to means less than 10% of limits imposed by 10 CFR Part 20.					
2.1.3 TLRC Related to Design Basis Events					
The design, construction and operation of the NGNP NHSS shall be such as to produce an "extremely low probability of occurrence" for accidents that could release significant quantities of radioactive fission products. (NRC: 10 CFR §50.34(a)(i)(2)). Design Basis Events (DBEs) shall be interpreted to include all events of frequency less than $1.0x10^{-2}$ and greater than $1.0x10^{-4}$ per plant year.					
The NGNP NHSS shall be designed to meet the following criteria for offsite doses to the public (10 CFR §50.34(a)(1)):					

Top Level Requirements ↓ / Overall Systems →	Nuclear Heat Supply System	Heat Transport System	Hydrogen Production System	Power Conversion System	Balance of Plant Systems
o An individual located at any point on the EAB shall not receive a radiation dose in excess of 25rem TEDE for any two hour period following the onset of a postulated fission product release.					
o An individual located at any point on the outer boundary of the Low Population Zone (LPZ), exposed to the radioactive cloud resulting from a postulated fission product release, shall not receive a radiation dose in excess of 25 rem TEDE.					
2.1.4 TLRC Related to Beyond Design Basis Events					
The design, construction and operation of the NGNP NHSS for events less frequent than AOOs and DBEs shall achieve a standard of safety superior to that characterized by the qualitative safety goals and quantitative objectives expressed by the NRC (*Safety Goals for the Operations of Nuclear Power Plants*). Such events shall be termed Beyond Design Basis Events (BDBEs)and occur at frequencies less than $1.0x10^{-4}$ per plant year and greater than $5.0x10^{-7}$ per plant year.					
The qualitative safety goals for NGNP NHSS design for BDBEs shall be as follows:					
o Individual members of the public should be provided a level of protection from the consequences of nuclear power plant operation such that individuals bear no significant additional risk to life and health.					
o Societal risks to life and health from nuclear power plant operation should be comparable to or less than the risks of generating electricity by viable competing technologies and should not be a significant addition to other societal					
The quantitative health objectives for NGNP NHSS design for BDBEs shall be as follows:					
o The risk to an average individual in the vicinity of a nuclear power plant of prompt fatalities that might result reactor accidents should not exceed one-tenth of one percent (0.1 percent) of the sum of prompt fatality risks resulting from other accidents to which members of the U.S. population are generally exposed.					
o The risk to the population in the area near a nuclear power plant of cancer fatalities that might result from nuclear power plant operation should not exceed one-tenth of one percent (0.1 percent) of the sum of cancer fatality risks resulting from all other causes.					

Top Level Requirements ↓ / Overall Systems →	Nuclear Heat Supply System	Heat Transport System	Hydrogen Production System	Power Conversion System	Balance of Plant Systems
2.2 State and Local Regulatory Requirements					
The Plant Designer shall identify and meet all state and local requirements that are dependent on plant siting, i.e., site specific. It is incumbent on the designers to assure that the system design is such that it facilitates conformance with all state and local requirements and the overall NHSS requirements to maintain standardization.					
2.3 Codes and Standards					
The design of the NGNP shall comply with all applicable federal, state, and local codes and standards. Codes and standards pertinent to the nuclear industry shall only be utilized in the design, fabrication and installation of structures, systems and equipment where such codes and standards are applicable. The Plant Designer shall list all applicable codes and standards, and the applicable revision of each document.					
NUREG/CR-5973 should be used as a starting point for the identification of codes and standards to be followed during preconceptual design.					
Since the NGNP will be built within a DOE facility, and will interface with other existing facilities, the Plant Designer must evaluate DOE Orders to ensure that the NGNP can interface with the DOE Site and be acceptable to the DOE.					
3. NGNP Project Mission Requirements					
3.1 Develop and Demonstrate a Commercial-Scale Prototype					
3.1.1 Commercial-Scale Prototype					
The reactor shall be built to commercial scale with a power level consistent with passive safety features.					
3.1.2 Passive Safety Design					
The NGNP shall have adequate passive safety systems to cool the core down from full power to safe shutdown mode and limit the fuel temperatures under accident conditions to levels consistent with the fuel performance requirements.					
3.1.3 Fuel Qualification					
Fuel performance shall be qualified and shall include a fuel design specification, fuel fabrication specification, quality assurance plan and program, irradiation testing and identification of failure probabilities as a function of operating condition.					

Top Level Requirements ↓ / Overall Systems →	Nuclear Heat Supply System	Heat Transport System	Hydrogen Production System	Power Conversion System	Balance of Plant Systems
3.1.4 Design Life					
The NGNP shall be designed for a 60-year service life. For components that cannot be designed for 60-year operation, provisions shall be made in the design for economic replacement of the part or component.					
3.1.5 Defense-in-Depth Philosophy					
The NGNP NHSS shall be designed in accordance with defense-in-depth philosophy and the intent to eliminate the need for off-site evacuation and sheltering.					
3.1.6 Safeguards					
The NGNP shall incorporate measures necessary to prevent unauthorized access to nuclear material items, theft, diversion, hoaxes, and other malevolent acts, including sabotage intended to release radioactivity or disrupt operations as stated in 10 CFR 74, Material Control and Accounting of Special Nuclear Material, and 10 CFR 75, Safeguards on Nuclear Material – Implementation of US International Atomic Energy Agency (IAEA) Agreement.					
3.1.7 Security					
Per 10 CFR 73, Physical Protection of Plants and Materials, provisions (as adapted for the PBMR) for site security, including, barriers, access controls, intrusion detection systems, site security forces, central alarm facilities, backup power for security functions, protection during storage and handling, and protection during radiological, fire, or other emergencies shall be included to provide for the protection of the reactor, reactor fuel, spent fuel, electrical power, and hydrogen, all of which are anticipated to be present at high-hazard levels. Protection methods used against the possibility of violent external assault, attack by stealth or deception, and sabotage, including the potential participation of one or more employees shall be included.					
3.1.8 Fuel Performance					
The NGNP fuel shall perform to a level such that the following top-level requirements are satisfied for the NHSS design:					
o During normal operations, offsite radiation doses to the public shall be less than the limits specified in Appendix I of 10 CFR 50 and 40 CFR 190.					
o Occupational radiation exposures shall be no greater than 10% of the limits specified in 10 CFR 20.					
o During design-basis accidents, offsite doses at the site Exclusion Area Boundary (EAB) shall be less than those specified in the Manual of Protective Action Guides and Protective Actions for Nuclear Incidents (EPA-520/1-75-001) for sheltering and evacuation.					

Top Level Requirements ↓ / Overall Systems →	Nuclear Heat Supply System	Heat Transport System	Hydrogen Production System	Power Conversion System	Balance of Plant Systems
3.1.9 System Interactions The interfaces between the NHSS and the hydrogen production unit or other process heat systems shall be designed to ensure that failures or upset conditions in the reactor primary system do not result in failures or adverse impacts to the other interfacing systems.					
3.2 Develop and Demonstrate Hydrogen Production					
3.2.1 Hydrogen Production in Cogeneration Mode The NGNP shall be designed for continuous operation in either the 100% electric power production mode or in the cogeneration mode with the equivalent of up to 50 MWt of the reactor's thermal energy used for hydrogen production.					
3.2.2 Thermo-chemical Process and High-Temperature Electrolysis Hydrogen production shall be demonstrated using a thermo-chemical process and a high-temperature steam electrolysis process.					
3.3 Develop and Demonstrate High-Efficiency Power Conversion					
3.3.1 High-Efficiency Electric Power Conversion The electric power conversion system, in the all-electric mode, shall have an overall efficiency (defined as net electrical output divided by net thermal input) of about [36%] to convert thermal power to electrical. Overall efficiency shall be as high as possible, and consistent with other related parameters, to optimize economics.					
3.3.2 Electric Power Production at Commercial Scale The electric power production system shall be designed and sized to produce electricity at commercial scale using 100% of the NHSS thermal energy.					
3.4 Obtain Licenses and Permits to Construct/Operate the NGNP					
3.4.1 License Rules for NGNP Pending a successful pre-application program with the NRC, the NGNP NHSS shall obtain a combined construction and operating license from the NRC via 10 CFR 52 rules.					

Top Level Requirements ↓ / Overall Systems →	Nuclear Heat Supply System	Heat Transport System	Hydrogen Production System	Power Conversion System	Balance of Plant Systems
3.4.2 Risk-Informed, Performance-Based Approach The NGNP project shall use a risk-informed, performance-based approach to regulatory decision-making. 3.4.3 Probabilistic Risk Assessment The NGNP project shall perform a full-scope probabilistic risk assessment which includes analyses of internal and external events.					
3.5 Performance					
3.5.1 Human-Machine Interface					
The NGNP design shall optimize the human-machine interface based on human factors engineering principles and operating experience to the extent possible for a single integrated NHSS, HPS and PCS without compromising plant safety.					
3.5.2 Need for Operator Actions					
The NGNP integrated facility shall be designed to minimize the need and maximize the time available for operator actions in response to plant transients, and other routine/non-routine activities during normal operations, startup, shutdown and surveillance/testing.					
3.5.3 Integrated Control Room Design					
The NGNP facility design shall permit the operators to take control of the reactor and support processes from within the single integrated control room using the manual mode at any time.					
3.5.4 Staffing for Operation and Maintenance of Integrated Facility					
The NGNP facility shall be designed to optimize the staffing needed for integrated operation and maintenance activities to the extent possible without compromising plant safety.					
3.5.5 Interface Performance					
The interfaces between the NHSS, the HPS and the PCS shall be designed to allow for safe transitions between all-electric power production at levels up to 100%, to the production of hydrogen and electric power in the cogeneration mode (where the hydrogen production consumes up to 50 MWt) without NHSS shutdown.					

Top Level Requirements ↓ / Overall Systems →	Nuclear Heat Supply System	Heat Transport System	Hydrogen Production System	Power Conversion System	Balance of Plant Systems
3.6 Include Provisions for Inspection and Testing					
3.6.1 Safety and Operational Performance Testing					
The NGNP NHSS design shall include sufficient flexibility to allow for the investigation of safety and operational performance margins in the plant responses to anticipated operating occurrences and risk-important events, both for the initial design and as advancements and modifications for future designs are considered.					
3.6.2 Evaluation and Testing of Investment Protection Features					
The NGNP shall include provisions for evaluating and testing investment protection systems that are separate and independent of plant safety and control systems.					
3.6.3 Planned Inspection of Integrated Facility					
After [TBD] years of operation, the NGNP facility shall shutdown for an inspection as required to verify performance for long-term materials qualification and component lifetimes.					
3.7 Enable Demonstration of Energy Products and Processes					
3.7.1 Hydrogen Applications					
The NGNP Project shall establish a test bed for evaluating various local and regional uses of hydrogen.					
3.7.2 Hydrogen Storage and Distribution					
The NGNP Project shall apply hydrogen storage and distribution systems adequate to support the needs of the hydrogen infrastructure test bed, and designed to demonstrate the safety and economics of the different hydrogen storage and distribution technologies.					
3.7.3 Indirect Power Conversion System					
The NGNP shall include provisions for the later addition of an indirect supercritical-CO_2 Brayton cycle power conversion system that uses up to 50 MWt from the NGNP reactor to produce electricity at a target overall power conversion efficiency of 45%.					
3.8 Plant and Fuel Acquisition					
The NGNP (including fuel supply and services) design, licensing, and procurement, construction, plus startup and testing support shall be provided by a consolidated vendor team.					

Top Level Requirements ↓ / Overall Systems →	Nuclear Heat Supply System	Heat Transport System	Hydrogen Production System	Power Conversion System	Balance of Plant Systems
3.9 Operation and Training					
The NGNP shall include a plant simulator as a control system design tool as well as for operator training.					
The NGNP shall be operated by a commercial based nuclear and hydrogen plant operator entity. The NGNP shall provide for the training of future PBMR plant operators.					
3.10 Quality and Configuration Management Requirements					
3.10.1 Quality Assurance The NGNP project shall use the U.S. national consensus standard ASME NQA-1-1997 "Quality Assurance Program Requirements for Nuclear Facilities Applications" (see Ref. 9) and Subpart 4.2 of ASME NQA-1-2000 "Guidance on Graded Application of Quality Assurance (QA) for Nuclear-Related Research and Development" for project specific development R&D activities. The Quality Assurance requirements for specific-project activities will be specified in project-specific Quality Assurance Plans (QAPs). The project-specific QAPs will include the management controls commensurate with the project work scope and importance to the Generation IV Program goals and objectives. 3.10.2 Configuration Management A formal configuration management process shall be established and used throughout the NGNP life cycle to control the activities and interfaces among design, construction, and information management activities to ensure that the configuration of the facility is established, approved, and maintained. Configuration management practices shall apply to all contractors and subcontractors as identified by the Systems Engineering Management Plan (SEMP). The requirements for configuration management are found in the U.S. national consensus standard NQA-1-1997.					
3.11 Environmental Requirements					
The NGNP project shall minimize the use of natural resources consistent with efficient and cost effective facility and process designs.					
3.11.1 Environmental Impact Statement An Environmental Impact Statement shall be prepared for the NGNP. NRC regulations implementing the National Environmental Policy Act are contained in 10 CFR 51, Environmental Protection Regulations for Domestic Licensing and Related Regulatory Functions, with 10 CFR 51.45, Environmental Report, providing general requirements for the contents of the environmental reports, including consideration of alternatives to proposed actions.					

Top Level Requirements ↓ / Overall Systems →	Nuclear Heat Supply System	Heat Transport System	Hydrogen Production System	Power Conversion System	Balance of Plant Systems
3.11.2 Air					
Emissions from the NGNP and hydrogen production facilities shall comply with all the applicable requirements of the Clean Air Act/Air Programs. Applicable Federal regulations include 40 CFR 50 - 99, Clean Air Act.					
3.11.3 Water					
For the use and release of water, the NGNP and hydrogen production facilities shall comply with all applicable requirements of the Clean Water Act/Water Programs. Applicable Federal regulations include 40 CFR 100–149, Clean Water Act.					
3.11.4 Radioactive Releases					
Offsite radioactive releases from the NGNP shall comply with all NRC, EPA and associated DOE requirements including dose limits specified in 10 CFR 20, 10 CFR 50 Appendix I, and 40 CFR 190 for normal operation and 10 CFR 100 for design basis accidents.					
3.11.5 Wastes					
The NGNP project shall minimize the generation of all wastes, including radioactive, non-radioactive, and mixed wastes, and shall comply with applicable DOE Orders and NRC Regulations in the treatment of these wastes.					
3.11.6 Spent Nuclear Fuel					
Provision for temporary storage of discharged spent fuel shall be provided in the design of the NGNP facility. Spent nuclear fuel generated by the NGNP reactor will be packaged and shipped to a Federal Repository for burial according to the applicable regulations in effect at the time of reactor discharge.					
3.12 FERC Requirements					
As appropriate, the sale of power from the NGNP shall comply with FERC contract and reporting requirements. For example, if the sale of power from the NGNP is to one or more entities that will resale the power to others, the contract terms will be regulated by Federal Energy Regulatory Commission (FERC).					

3.4 FUNCTIONS

Determination of the plant functions and subfunctions (see Definitions section) is the first step in a Functional Analysis that leads to the system design requirements. Functional Analysis is a systems engineering method used to develop functions. Functions are descriptive, non-quantitative statements of an action (what is to be achieved) to meet the top goals (see Definitions section), which for the NGNP are generation of electric power and production of hydrogen by separation of the hydrogen and oxygen in water. From the functions flow requirements which are the basis and justification for design selections.

The functions of the NGNP are to meet the set of goals shown in Figure 3.4-1 and detailed in the following sections. The goals/functions in Figure 3.4-1 are general statements that do not assume a particular plant design.

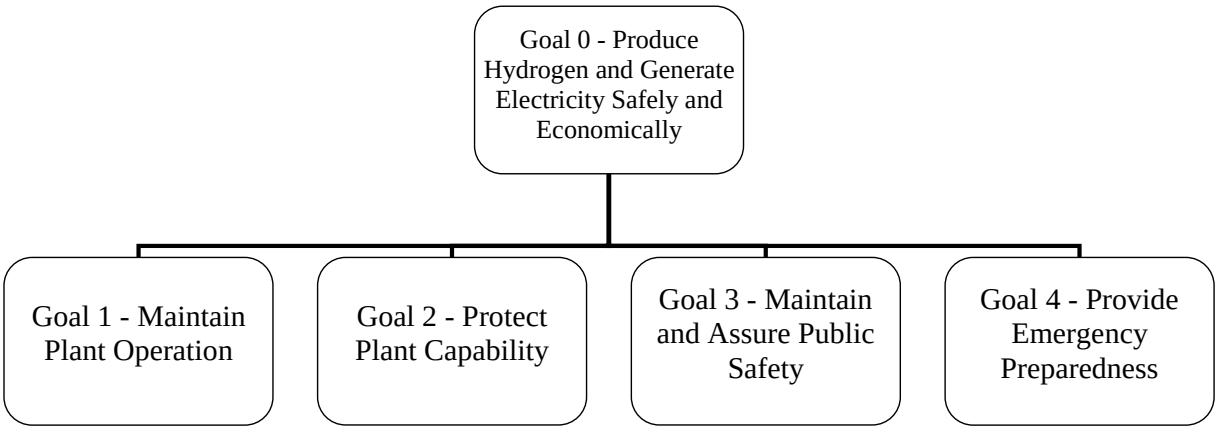

Figure 3.4-1: NGNP Goals

3.4.1 Goal 0 - Produce Hydrogen and Generate Electricity Safely and Economically

This is the overall purpose for the NGNP. The following four subordinate goals are the basis for organizing the plant design requirements.

3.4.2 Goal 1 - Maintain Plant Operation

This goal is to maintain the design output of hydrogen and electric power according to the design duty cycles and planned maintenance program over the plant lifetime. In essence, this

is normal operation. This goal is essentially the "economically" part of Goal 0. This goal includes operation under all restrictions and regulations governing the normal conduct of electric power generation and the production of hydrogen from water.

Functions under Goal 1 are subdivided into five sets, according to the state of operation of the plant. These apply when the overall plant is in the following states:

- Nuclear heat source, electric generation and hydrogen production operating
- Nuclear heat source and electric generation operating, and hydrogen production unavailable
- Nuclear heat source, electric generation and hydrogen production all shutdown
- Normal transitions between the above four states (in contrast to transients)

3.4.3 Goal 2 - Protect Plant Capability

Under this goal are the functions that respond in all events to assure that the plant remains functional. These are functions that prevent damage to the plant or limit the extent of consequent damage and by so doing avoid conditions that challenge safety. This goal is implementation of both the "economically" and the "safely" parts of Goal 0. These functions include protection of the investment so that the plant will maintain capability to continue with Goal 1.

3.4.4 Goal 3 - Maintain and Assure Public Safety

Under this goal are the functions that respond in all events to assure the safety of onsite personnel and the general public. In addition, this goal includes functions that limit environmental impacts of offsite emissions. Under Goal 3 are the functions of systems that respond to risk from fire, hazardous material, energetic fluids and -- most significantly since this is a nuclear power plant -- risks of radiation from and transport of radionuclide inventories.

3.4.5 Goal 4 - Provide Emergency Preparedness

Goal 4 has the functions of offsite emergency response preparedness. These are organized into two supporting functions: Radiological Emergency Preparedness and Non-nuclear Emergency Preparedness.

3.4.6 Functional Analysis

Functional Analysis is an element of Systems Engineering. Systems Engineering is an engineering discipline whose responsibility is creating and executing an interdisciplinary process to ensure that the customer and stakeholder's needs are satisfied in a high quality, trustworthy,

cost-efficient and schedule-compliant manner throughout a plant's entire life cycle. Systems Engineering focuses on defining customer needs and required functionality early in the development cycle, documenting requirements, then proceeding with design synthesis and system validation while considering the complete problem and resolving conflicts in design evolution.

Functional Analysis, in general, involves establishing the functional requirements for all system levels of the plant at the earliest stage of the design process, documenting them in detail with justification and assuring that they are prominent inputs to the engineers designing the SSCs. Products of the design process (*e.g.*- system descriptions, test plans, operating manuals) all need to be "tested" against the established system requirements at all phases of the project and plant lifetime.

Functions are developed below the goals/functions that are shown in Figure 3.4-1 in the process of Functional Analysis. For the preconceptual design, these are detailed in graphical "tree" form in Appendix 3C. The construction of the complete functional tree must take into account the design choices made in order to be useful and to use the right nomenclature. This means that the Functional Analysis is dependent on the reference design (as shown in the preconceptual design development process in Figure 3-3). However, the design requirements are dependent on the Functional Analysis. The exact construction of the functional hierarchy is not significant, as long as all functions are accounted for.

3.5 ALLOCATION OF FUNCTIONS TO SYSTEMS

The end point functions from the functional tree (Appendix 3C) are allocated to the Overall Systems according to Table 3.5-1.

Table 3.5-1: Allocation of Functions to Overall Systems

Functions ↓ / Overall Systems →		Nuclear Heat Supply System	Heat Transport System	Hydrogen Production System	Power Conversion System	Balance of Plant Systems
Maintain Plant Operation	Sheets 2-6					
Maintain Site and Worker Safety		■	■	■	■	■
Provide Nuclear Fuel	Sheet 7					
Maintain Nuclear Fuel within Fuel Elements		■				
Supply Fuel Elements		■				■
Recirculate Fuel Elements		■				
Store Spent Fuel Elements		■				
Control Access to Fuel		■				■
Monitor and Control Radiation Exposure from Fuel		■				■
Generate Nuclear Heat	Sheet 8					
Start Fission Reaction		■				
Fission Uranium		■				
Maintain Core Configuration		■				
Monitor Neutron Flux		■				■
Move Control Elements		■				■
Maintain Control Element Channel Configuration		■				
Control Radiation Exposure from Reactor Unit System		■				
Maintain Nuclear Reactor Shutdown	Sheet 9					
Monitor Neutron Flux		■				
Insert Control Rods		■				
Insert Reserve Shutdown Spheres		■				
Maintain Control Element Channel Configuration		■				
Control Radiation Exposure from Reactor Unit System		■				
Enable Maintenance		■	■			
Cool Reactor System Unit	Sheet 10					
Transport Heat to Ambient Heat Sink		■				
Transport Heat from Fuel	Sheet 11					
Transfer Heat from Fuel to Coolant		■				
Impart Pumping Power			■			■
Modulate Coolant Flow		■	■			■
Maintain Flow Passage Configuration		■	■			
Measure Coolant Flow		■	■			
Limit NHSS Component Temperatures		■				
Supply Coolant Fluid		■				
Monitor Coolant Condition		■				

Functions ↓ / Overall Systems →		Nuclear Heat Supply System	Heat Transport System	Hydrogen Production System	Power Conversion System	Balance of Plant Systems
Maintain Coolant Chemistry		■				
Limit Circulating Radionuclides		■	■			
Maintain Coolant Pressure		■	■			
Limit Coolant Leaks		■	■			
Conserve Heat		■	■			
Transport Heat from Fuel to SHTS	Sheet 13					
Transfer Heat from Fuel to Coolant		■				
Impart Pumping Power			■			■
Modulate Coolant Flow		■	■			■
Maintain Flow Passage Configuration		■	■			
Measure Coolant Flow		■	■			
Supply Coolant Fluid		■				
Monitor Coolant Condition		■				
Maintain Coolant Chemistry		■				
Limit Circulating Radionuclides		■	■			
Maintain Coolant Pressure		■	■			
Limit Coolant Leaks		■	■			
Transfer Heat from Primary Coolant to Secondary Working Fluid			■			
Conserve Heat		■	■			
Transport Heat from SHTS to HPS	Sheet 14					
Impart Pumping Power			■			■
Modulate Coolant Flow			■			■
Maintain Flow Passage Configuration		■	■	■		
Measure Coolant Flow			■			
Supply Coolant Fluid		■				
Monitor Coolant Condition		■				
Maintain Coolant Chemistry		■				
Limit Circulating Radionuclides		■				
Maintain Coolant Pressure		■	■	■		
Limit Coolant Leaks		■	■	■		
Transfer Heat from Secondary Fluid to Process			■	■		
Conserve Heat		■	■	■		
Produce Hydrogen from Water	Sheet 15					
Supply Makeup Water to HPS				■		■
Supply Electric Power				■	■	■

Functions ↓ / Overall Systems →		Nuclear Heat Supply System	Heat Transport System	Hydrogen Production System	Power Conversion System	Balance of Plant Systems
Split Water				■		
Purify Oxygen				■		
Disposition Oxygen				■		■
Purify Hydrogen				■		
Store Hydrogen				■		
Deliver Hydrogen to Customer				■		■
Transport Waste Heat to Ambient Sink				■		
Control Process System				■		
Transport Heat from SHTS to PCS	Sheet 17					
Impart Pumping Power			■			■
Modulate Coolant Flow			■			■
Maintain Flow Passage Configuration		■	■		■	
Measure Coolant Flow			■			
Supply Coolant Fluid		■				
Monitor Coolant Condition		■				
Maintain Coolant Chemistry		■				
Limit Circulating Radionuclides		■	■		■	
Maintain Coolant Pressure		■	■		■	
Limit Coolant Leaks		■	■		■	
Transfer Heat from Secondary Fluid to Water/Steam			■		■	
Conserve Heat		■	■		■	
Generate Electric Power	Sheet 18					
Circulate Steam from Steam Generator to Turbines					■	
Convert Steam Heat to Mechanical Power					■	
Convert Mechanical Power to Electricity					■	
Deliver Electricity to Electric Grid					■	■
Transport Waste Heat to Ambient Sink					■	
Supply Makeup Water to PCS					■	■
Control PCS					■	■
Protect Plant Capability	Sheet 19					
Protect Fuel Integrity		■				
Protect Heat Generation Capability		■				
Protect Heat Transport Capability		■	■			
Protect PCS					■	
Protect Process System				■		
Maintain Site and Worker Safety		■	■	■	■	■

Functions ↓ / Overall Systems →	Nuclear Heat Supply System	Heat Transport System	Hydrogen Production System	Power Conversion System	Balance of Plant Systems
Maintain and Assure Public Safety Sheet 20					
Provide Fire Protection					
for Nuclear Heat Supply System (NHSS)					■
for Hydrogen Production System (HPS)					■
for Power Converstion System (PCS)					■
Manage and Secure Hazmat					
for Nuclear Heat Supply System (NHSS)	■				
for Hydrogen Production System (HPS)					
H_2			■		
O_2			■		
other			■		
for Power Converstion System (PCS)				■	
Manage Energetic Fluids					
for Nuclear Heat Supply System (NHSS)	■				
for Hydrogen Production System (HPS)			■		
for Power Converstion System (PCS)				■	
Maintain Control of Radionuclides Sheet 21					
Retain Fission Products within Fuel Elements	■				
Control Direct Radiation	■				
Control Core Heat Generation	■				
Maintain Core Coolant Flow Path	■	■	■	■	
Maintain Core Coolant	■	■	■	■	
Transport Heat from Core to Heat Sink	■	■	■	■	
Maintain Heat Sink for Core Heat	■			■	
Monitor and Control Primary Circuit Chemical Condition	■				
Monitor and Control Radio-nuclide Transport from Primary Circuit	■				
Monitor and Control Radio-nuclide Transport from Reactor Building	■				■
Monitor and Control Radiation from Fuel in Storage	■				■
Monitor and Control Radiation from Purification System, etc.	■				■
Control Access to Radio-nuclides	■				■
Provide Emergency Preparedness Sheet 22					
Limit Environmental Impacts of Offsite Non-nuclear Emissions	■	■	■	■	■
Radiological Emergency Preparedness					
Non-nuclear Emergency Preparedness					
Maintain Site Proliferation Resistance	■				■

3.6 DESIGN REQUIREMENTS

In each of the overall system descriptions in Sections 4 through 10, there is a restatement of the specific functions of that system down to the system organization levels shown in Figure 3.2-8 through Figure 3.2-12.

Following that in those system descriptions there is the specification of design requirements and design criteria. The evolution of design requirements and design criteria was shown schematically in Figure 3-3. The design requirements and design criteria will be derived from one of the following:

- The direct application of one of the Top Level Plant Design Requirements that is shown applicable to that system in Section 3.3.
- Breakdown and further clarification of each requirement and design criterion (see Definitions section) in the Top Level Plant Design Requirements, shown applicable to that system in Section 3.3, for cases of Top Level Plant Design Requirements
- Allocation of the Top Level Plant Design Requirements, shown applicable to that system in Section 3.3, for cases of Top Level Plant Design Requirements, that apply to more than one system and need to be allocated (for example an availability factor)
- A requirement that comes from the functions of Section 3.4 as allocated in the Excel table in Section 3.5.

The system level requirements are to be categorized into the following groupings:

- System Configuration and Essential Features
- Operational Requirements
- Structural Requirements
- Environmental Requirements
- Instrumentation & Control Requirements
- Surveillance and ISI Requirements
- Availability Assurance Requirements
- Maintenance Requirements
- Safety Requirements
- Codes & Standards Requirements
- Quality Assurance Requirements
- Construction Requirements
- Decommissioning Requirements

3.7 INTERFACE REQUIREMENTS

The objective of this section is to tabulate the overall NGNP external interfaces (see Definitions section) and to itemize the physical and functional interfaces among the NHSS, the HTS, the HPS, the PCS and the BOP.

3.7.1 External Interfaces

The principal physical and functional interfaces at the limits of the NGNP are as described in the following sections.

3.7.1.1 Input to the Plant

The NGNP receives nuclear fuel elements (spheres) which are the energy source for the plant. These are received by highway transport directly to the Fuel Handling and Storage System of the Nuclear Heat Supply System.

The plant is connected to the regional electric grid to supply power to the plant (and to export electric power, depending on the plant operating status) and to the INL local electric system. The connection is with the Plant Electrical Distribution System of the BOP.

The plant receives water, mainly as feedstock for hydrogen production but also for make-up to the steam turbine-generator cycle and for other circulating water systems. Water is obtained from on-site wells that are part of the Plant Water System of the BOP.

Helium makeup to account for leaks is delivered by highway transport to the Helium Service System of the Reactor System.

If required, sulfuric acid makeup may be delivered by highway transport to the Sulfuric Acid Storage subsystem of the Hydrogen Generation System of the HPS.

Fuel will be required by the Auxiliary Boiler of the BOP. If the fuel is natural gas, a pipeline supply is presumed. If the fuel is other than natural gas, it would be delivered by highway transport.

Diesel fuel will be required by the Standby AC Power System of the BOP, delivered by highway transport.

Other process consumables and maintenance items, yet to be identified and quantified, are periodically needed by the NHSS, HTS, HPS, PCS and BOP.

3.7.1.2 Output from the Plant

The plant delivers hydrogen by pipeline from the Hydrogen Product Packaging, Storage and Shipping System of the HPS.

The plant is connected to the regional electric grid and to the INL local electric system to export electric power (and to supply power to the plant, depending on the plant operating status). The connection is with the Plant Electrical Distribution System of the BOP.

Oxygen is disposition from the HPS is yet to be determined.

Waste heat is rejected to the atmosphere from all five of the Overall Systems. The largest quantity of heat rejection is from the Air-cooled Condenser of the PCS.

Other waste products, discharges and emissions yet to be determined may be output from the NHSS, HTS, HPS, PCS and BOP.

3.7.2 Interfaces Among Systems

The functional and physical interfaces among Overall Systems are itemized in Table 3.7-1 and Table 3.7-2.

Table 3.7-1: Functional Interfaces Among Overall Systems

	Nuclear Heat Supply System (NHSS)	Heat Transport System (HTS)	Hydrogen Production System (HPS)	Power Conversion System (PCS)	Balance of Plant Systems (BOP)
Nuclear Heat Supply System (NHSS)		The NHSS provides hot helium to the HTS and receives the circulating helium at a lower temperature from the HTS. The NHSS provides control, power, component cooling and HVAC to the HTS.	no interface	no interface	BOP provide for overall C&I interface and control room actuation. BOP provides auxiliaries and services to the NHSS†.
Heat Transport System (HTS)			The HTS provides hot helium to the HPS and receives the circulating helium at a lower temperature from the HPS.	The HTS provides hot helium to the PCS and receives the circulating helium at a lower temperature from the PCS.	no interface
Hydrogen Production System (HPS)				no interface	BOP provide for overall C&I interface and control room actuation. The BOP provides electric power to the HPS. The BOP provides water to the HPS. BOP provides other auxiliaries and services to the HPS†.
Power Conversion System (PCS)					BOP provide for overall C&I interface and control room actuation. The PCS delivers electric power to the BOP and receives power from the BOP. BOP provides other auxiliaries and services to the PCS†.
Balance of Plant Systems (BOP)					

† The BOP provides electric power, makeup water, cooling water, compressed gases and other services.

Table 3.7-2: Physical Interfaces Among Overall Systems

	Nuclear Heat Supply System (NHSS)	Heat Transport System (HTS)	Hydrogen Production System (HPS)	Power Conversion System (PCS)	Balance of Plant Systems (BOP)
Nuclear Heat Supply System (NHSS)		Boundaries‡ of the Reactor Pressure Vessel and the PHTS Piping	no interface	no interface	Boundaries‡ of the NHSS components and the ends of connecting piping or cable runs, therefore with the piping and/or cable being part of the BOP.
Heat Transport System (HTS)			Boundaries‡ of the Process Coupling Heat Exchanger (Sulfuric Acid Decomposer) and the SHTS Piping	Boundaries‡ of the Steam Generator and the SHTS Piping	no interface
Hydrogen Production System (HPS)				no interface	Boundaries‡ of the HPS components and the ends of connecting piping or cable runs, therefore with the piping and/or cable being part of the BOP.
Power Conversion System (PCS)					Boundaries‡ of the PCS components and the ends of connecting piping or cable runs, therefore with the piping and/or cable being part of the BOP.
Balance of Plant Systems (BOP)					

‡ The boundary of a component to which piping is attached is the first circumferential joint in a welded connection, the face of the first flange in a bolted connection or the first threaded joint in a screwed connection. Control and electrical boundaries are at conventionally defined terminal points.

3.8 DESIGN DATA NEEDS

No Design Data Needs have been identified.

3.9 COMPLEXITY, RISKS, AND FUTURE STUDIES

3.9.1 Complexity and Risks

For plant level design and system integration, there are several apparent complexities that represent programmatic risks. These are associated with the meshing of the methods and disciplines of nuclear engineering and those of the chemical process industry. Slightly different approaches and practices could result in engineering disconnects which could pose a potential risk to fulfilling overall goals. These are to be addressed in the ongoing WBS element of Plant Level Design and Integration.

Areas where this complexity may affect the plant level design include the following:

- Maintenance of a tight envelope of nuclear-related focus apart from conventional (non-nuclear) process-related
- Determination of developmental maturity in design engineering phases and the need to maintain fallback design or performance options.

3.9.2 Future Studies

The Functional Analysis, which is the basis for the content of Sections 3.4 through 3.7 will be revised and refined in the conceptual design phase. This will include establishing a scheme for tracking requirements down through the plant design documentation. Additionally, the scopes of the description in Section 3.1, the work breakdown structure in Section 3.2.1, the Organization of Systems in Section 3.2.2 and the allocation of top level requirements in Section 3.3 will need to be expanded as the design progresses. Tabulations of functions, requirements and interfaces could be expanded to tiers below the level of the Overall Systems to the Major Systems SSCs. To respond to these and other needs as the design progresses, a front end future special study is recommended to select a commercially available systems engineering software such as CORE® [3-12] or DOORS® [3-13] for these tasks.

There is a need for a comprehensive transient computational model of the NGNP. This model would predict the performance of the actual plant in other than the steady-state mode. Such a program is needed for several applications. The most significant is to generate the thermal and mechanical loads imposed on systems, structures and components for use in their design analyses. The model is also essential to determination of control set points and controller dynamic settings and to verify the adequacy of protective features of the control systems. The model will also serve to develop plant simulation for planning of operations and for operator training.

A Value Engineering process should be initiated for the conceptual design phase. Value Engineering is a systematic evaluation of the plant design features, particularly addressing the

features that challenge technology and/or drive overall cost, to find more elegant solutions that will improve system performance and/or reduce cost compared to the initial selections. To be effective, a Value Engineering study needs to allow some time for the conceptual design to start to take shape, but not so long that the opportunities to make changes are lost. The Value Engineering studies would be at the facility or system level, or a combination, based on an initial screening process.

REFERENCES

[3-1] U. S. Department of Energy, *Procedures and Guidelines for Functional Analysis*, Document DOE-HTGR-85022, Rev. 3, June 1986.

[3-2] U. S. Department of Energy, MHTGR Conceptual Design Package, Volume III, Plant Functional Analysis, December 1987.

[3-3] U. S. Department of Energy, Project No. 02-196/PR: 02SF22609, *NUCLEAR ENERGY RESEARCH INITIATIVE ANNUAL REPORT, Hydrogen Production Plant Using the Modular Helium Reactor*, Project No. 02-196, Reporting Period: September 2002-September 2003.
[http://www.energetics.com/neri/index/02-196_fy03_ar.pdf]

[3-4] *High Temperature Gas-Cooled Reactors for the Production of Hydrogen: Establishment of the Quantified Technical Requirements for Hydrogen Production that will Support the Water-Splitting Processes at Very High Temperatures*, EPRI, Palo Alto, 1009687.
[http://my.epri.com/portal/server.pt?space=CommunityPage&cached=true&parentname=ObjMgr&parentid=2&control=SetCommunity&CommunityID=277&PageID=0&RaiseDocID=000000000001009687&RaiseDocType=Abstract_id]

[3-5] NGNP and Hydrogen Production Preconceptual Design Report, NGNP-01-RPT-001, Special Study 20.1 - Reactor Type Comparison, January 2007.

[3-6] NGNP and Hydrogen Production Preconceptual Design Report, NGNP-01-RPT-001, Special Study 20.2 – Prototype Power Level, January 2007.

[3-7] NGNP and Hydrogen Production Preconceptual Design Report, NGNP-01-RPT-001, Special Study 20.3 – High Temperature Process Heat Transfer and Transport, January 2007.

[3-8] NGNP and Hydrogen Production Preconceptual Design Report, NGNP-01-RPT-001, Special Study 20.4 – Power Conversion System, January 2007.

[3-9] NGNP and Hydrogen Production Preconceptual Design Report, NGNP-01-RPT-001, Special Study 20.6 – NGNP Licensing & Permitting Study, January 2007

[3-10] NGNP and Hydrogen Production Preconceptual Design Report, NGNP-01-RPT-001, Special Study 20.7 – NGNP By-Products and Effluents Study, January 2007

[3-11] Microsoft Excel file, "NGNP WBS Rev 3 2007-04-05.xls," attachment to e-mail from Vondell J. Balls to E. Brabazon, F. Southworth and J. Saurwein, 05APR07.

[3-12] Internet website "Deliver project success with integrated systems development", Vitech Corporation.
[http://www.vitechcorp.com/products/]

[3-13] Internet website "Requirements Management for Advanced Systems and Software Development", Telelogic AB.
[http://www.telelogic.com/products/doors/doors/index.cfm]

DEFINITIONS

Critical SSCs	Systems, structures or components that are not commercially available or do not have proven industry experience. It is implied that critical SSCs are in need of technology development (R&D) or are at an early design development stage.
NGNP Demonstration	First NGNP.
Design Criterion	A code, standard or other institutional requirement specifically applicable to an element of the engineering design.
Design Data Need	A formal documentation of the technology development (R&D) needed for the design engineering to proceed to completion.
Design Requirement	An explicit statement of a design feature or quantitative attribute applicable to an element of the engineering design.
Engineering Design	Whereas engineering is defined as the design, manufacture, construction and operation of efficient and economical structures, machines, processes and systems, the term engineering design refers to the initial phase of activity from conception up to and supporting manufacture and/or construction and is manifest in documents, specifications, drawings and other material.
Facility	Term of reference to a combination of systems and buildings.
Function	A statement of ***what*** is to be performed which supports attainment of a Goal.
Functional Analysis	Element of the top-down systems engineering process to systematically develop, trace and document the functions needed to meet top level requirements (See Section 3.4.6).
Functional Requirement	A design requirement derived from a functional need, through the Functional Analysis process, in contrast to an imposed requirement or a design criterion.
Functional Tree	A diagram which displays the interrelation of functions.
Goal	An end point or accomplishment towards which the engineering design effort is directed.

Interface	Physical and/or functional connection or interaction between one system, structure or component and another.
Major System	Some of the systems at the level under Overall Systems that because of their importance are significant parts of the respective Overall System.
Mode of Operation	Modes of common function, logic and purpose for the operation of the overall plant or of individual SSCs. They are hierarchical in nature and have as their goal the systematic reduction of overall plant functions to unambiguous logical construct. A specific set of states will have a fixed value for any given mode. Other states may vary within a limited range for any particular mode.
Nuclear Heat Supply System	One of the five systems in Table 3.2-2. Alternatively the NHSS, as it is defined, plus the Heat Transport System.
Overall System	Term of reference for the five systems in Table 3.2-2.
Plant	Term of reference for the site and Facilities.
Plant Mode	A given condition of functioning; a particular plant status.
Qualification	A condition or demonstration that must be met or complied with to assure that a subject will meet the requirements for a particular function or task.
Reference Design	In general, a consistent total plant design agreed upon as the basis for proceeding to a subsequent design phase or for comparison with alternatives. In the preconceptual design phase, the Reference Design is the engineering design evolved from the Special Studies.
Special Study	One of the evaluations and trade studies performed at the outset of preconceptual design.
States	States of the overall plant or of individual SSCs are plant characteristics or parameters of predetermined value or range. State definitions can be common to many modes of operation.
Systems Engineering	An engineering discipline. Refer to discussion in Section 3.4.6, Functional Analysis.
Top Level Requirement	High level requirements that represent the customer-level specifications for the NGNP Project on behalf of the evolving commercial End-User industry (including the owner and operator entities), the applicable codes and standards from the Regulatory institutions (including Federal, State and Local), and the mission-specific programmatics from DOE, INL/BEA and other Project stakeholders.

Trade Study	A comparative evaluation of alternative designs at the plant level or on the level of Major Systems that concludes with an adopted design for the Reference Design.
Value Engineering	A systematic evaluation of the plant design features, particularly addressing the features that challenge technology and/or drive overall cost, to find solutions that will improve system performance and/or reduce cost compared to the initial selections.

LIST OF ASSUMPTIONS

3.1 The electric power loss in conversion of AC to DC in the BOP for the HPS is approximately 10%.

APPENDICES

APPENDIX 3A WBS DICTIONARY

A Work Breakdown Structure (WBS) Dictionary describes what is in each element of a Work Breakdown Structure. The WBS itself, which is usually presented in graphical form, shows the hierarchical relationship of the elements. The WBS Dictionary should itemize the resources and processes that comprise the activity, give a succinct definition of some of the most important tasks included and provide a link to more detailed technical definition documents.

The listing following is an initial itemization that can be expanded to a true WBS Dictionary. It is organized alphabetically.

Acquisition Strategies	A Level 3 WBS element. The activity of selecting and bringing under contract the providers of the equipment and services for construction and operation of the NGNP Demonstration.
Air-cooled Condenser	A Major System. Part of the Power Conversion System (PCS). See PCDR Section 8 for description.
Balance of Plant Systems	One of Five Overall Systems. See PCDR Section 9 for description.
Buildings and Structures	A Level 5 WBS element.
Conceptual Design	A Level 3 WBS element. One of progressively more detailed design phases. Defined and delimited in time by decision points, statements of workscope and milestones.
Construct	The Level 2 WBS category concerning the construction phase of the NGNP Demonstration.
Construction	A Level 3 WBS element concerning the activity of construction of the whole plant.
Core Conditioning System	A Critical, Major System. Part of the Nuclear Heat Supply System (NHSS). See PCDR Section 4 for description.
Core Internal Structure	A Critical Plant Component. Part of the Nuclear Heat Supply System (NHSS). See PCDR Section 4 for description.
DD&D	A Level 3 WBS element for the deactivation, decontamination and decommissioning of the plant.
Defueling & Spent Fuel Mgmt	A Level 3 WBS element for the activity of removing fuel elements from the core.
Design	The Level 2 WBS category concerning the phase of the

	NGNP Demonstration from preconceptual design up to construction.
Electrolyzer	A Critical Plant Component. Part of the Hydrogen Production System (HPS). See PCDR Section 7 for description.
Environment, Safety & Health	A Level 3 WBS element concerning the impacts on workers, the public and the environment of the particular activities of the phase of construction, operation, *etc*.
Feedwater and Condensate System	A Major System. Part of the Power Conversion System (PCS). See PCDR Section 8 for description.
Final Design	A Level 3 WBS element. One of progressively more detailed design phases. Defined and delimited in time by decision points, statements of workscope and milestones.
Fuel Elements (spheres)	A Critical Plant Component. Part of the Nuclear Heat Supply System (NHSS). See PCDR Section 4 for description.
Fuel Handling and Storage System	A Critical, Major System. Part of the Nuclear Heat Supply System (NHSS). See PCDR Section 4 for description.
Fuel Manufacturing	The activity of establishing a fuel manufacturing industry and infrastructure to supply the nuclear fuel elements for the intended lifetime of the plant.
Heat Transport Systems	One of Five Overall Systems. See PCDR Section 6 for description.
Helium Isolation Valves (if required)	A Critical Plant Component. Part of the Heat Transport System (HTS). See PCDR Section 6 for description.
Helium Service System	A Critical, Major System. Part of the Nuclear Heat Supply System (NHSS). See PCDR Section 4 for description.
HPS Feedwater Treatment System.	A Major System. Part of the Hydrogen Production System (HPS). See PCDR Section 7 for description.
HPS Waste Treatment System	A Major System. Part of the Hydrogen Production System (HPS). See PCDR Section 7 for description.
Hydrogen Generation System	A Critical, Major System. Part of the Hydrogen Production System (HPS). See PCDR Section 7 for description.
Hydrogen Product Purification System	A Major System. Part of the Hydrogen Production System (HPS). See PCDR Section 7 for description.
Hydrogen Production System	One of Five Overall Systems. See PCDR Section 7 for description.

Initial Ops & Inspection	The Level 2 WBS category concerning the phase of the NGNP Demonstration between the end of construction and commercial commissioning (or the equivalent acceptance by the owners).
Intermediate Heat Exchanger (IHX)	A Critical Plant Component. Part of the Heat Transport System (HTS). See PCDR Section 6 for description.
License & Permit to Construct	A Level 3 WBS element concerning approvals for construction of the plant.
License & Permits to DD&D	A Level 3 WBS element concerning approvals for the deactivation, decontamination and decommissioning of the plant.
License & Permits to Operate	A Level 3 WBS element concerning approvals for operation of the plant.
Long-Lead Items	A Level 3 WBS element. Plant components for which a commitment to procure must be made before final design (or even preliminary design) is complete.
Long-Term Monitoring	A Level 3 WBS element.
Main Steam System	A Major System. Part of the Power Conversion System (PCS). See PCDR Section 8 for description.
Maintain License & Permits	A Level 3 WBS element concerning approvals for continued operation of the plant.
Maintain Plant	A Level 3 WBS element concerning anticipated activities to assure continued normal plant operation.
Mockup & Testing	A Level 3 WBS element concerning proof testing to verify design capabilities of certain SSCs in the construction phase.
NHSS Control & Instrumentation System	A Major System. Part of the Nuclear Heat Supply System (NHSS). See PCDR Section 4 for description.
NHSS Cooling Water System	A Major System. Part of the Nuclear Heat Supply System (NHSS). See PCDR Section 4 for description.
Nuclear Heat Supply Systems	One of Five Overall Systems. See PCDR Section 4 for description.
Operate Commercially	The Level 2 WBS category concerning the phase of the NGNP Demonstration following completion of initial operation and beginning with acceptance by the owners.
Operate Plant	A Level 3 WBS element.
Owners Engineer	The Level 2 WBS category that encompasses the plant owners' technical activities through all phases of the NGNP lifetime (concerning program management,

	project development, licensing, startup and operation planning, operation and eventual DD&D).
Oxygen Purification System	A Major System. Part of the Hydrogen Production System (HPS). See PCDR Section 7 for description.
PHTS Circulator	A Critical Plant Component. Part of the Heat Transport System (HTS). See PCDR Section 6 for description.
PHTS Valve	A Critical Plant Component. Part of the Heat Transport System (HTS). See PCDR Section 6 for description.
Plan DD&D Activities	A Level 3 WBS element concerning planning of the deactivation, decontamination and decommissioning of the plant.
Plant Control and Instrumentation Systems	A Major System. Part of the BOP. See PCDR Section 9 for description.
Plant Electrical Distribution System	A Major System. Part of the BOP. See PCDR Section 8 for description.
Plant HVAC System	A Major System. Part of the BOP. See PCDR Section 8 for description.
Plant Modifications	A Level 3 WBS element concerning the potential activity of alterations or renovations of parts of the plant following initial operation.
Plant Water Systems	A Major System. Part of the BOP. See PCDR Section 8 for description.
Post-Ops & DD&D	The Level 2 WBS category for the last phase of the NGNP Demonstration.
Power Conversion System	One of Five Overall Systems. See PCDR Section 8 for description.
Preliminary Design	A Level 3 WBS element. One of progressively more detailed design phases. Defined and delimited in time by decision points, statements of workscope and milestones.
Primary Heat Transport System (PHTS)	A Critical, Major System. Part of the Heat Transport System (HTS). See PCDR Section 6 for description.
Program Management	A Level 3 WBS element. The discipline of organizing and managing resources in such a way that these resources deliver all the work required to complete a project within defined scope, quality, time and cost constraints.
Reactivity Control System	A Critical Plant Component. Part of the Nuclear Heat Supply System (NHSS). See PCDR Section 4 for description.

Reactor Cavity Cooling System	A Critical, Major System. Part of the Nuclear Heat Supply System (NHSS). See PCDR Section 4 for description.
Reactor Pressure Vessel	A Critical Plant Component. Part of the Nuclear Heat Supply System (NHSS). See PCDR Section 4 for description.
Reactor Unit	A Critical, Major System. Part of the Nuclear Heat Supply System (NHSS). See PCDR Section 4 for description.
Refuel	A Level 3 WBS element concerning the activity of adding fuel to the nuclear reactor.
Secondary Heat Transport System (SHTS)	A Critical, Major System. Part of the Heat Transport System (HTS). See PCDR Section 6 for description.
Security	A Level 3 WBS element. Provision of police staffing, physical security, access control, transportation security, special event management, crime prevention and development of security and crisis procedures, crisis training, linking security with loss prevention and employee intervention programs.
SHTS Circulator	A Critical Plant Component. Part of the Heat Transport System (HTS). See PCDR Section 6 for description.
SHTS Piping	A Critical Plant Component. Part of the Heat Transport System (HTS). See PCDR Section 6 for description.
SHTS Piping	A Critical Plant Component. Part of the Heat Transport System (HTS). See PCDR Section 6 for description.
Shutdowns & Inspections	A Level 3 WBS element concerning activities in the anticipated interruptions of normal plant operation.
Steam Generator	A Critical, Major System. Part of the Power Conversion System (PCS).
Sulfuric Acid Decomposition Reactor (PCHX)	A Critical Plant Component. Part of the Hydrogen Production System (HPS). See PCDR Section 7 for description.
Sulfuric Acid Decomposition System	A Critical, Major System. Part of the Hydrogen Production System (HPS). See PCDR Section 7 for description.
Technology Development	Synonymous with Research and Development (R&D). A Level 3 WBS element.
Training	A Level 3 WBS element. Development of staff competence in the respective phase of construction, operation, *etc.*

Turbine Generator System	A Major System. Part of the Power Conversion System (PCS). See PCDR Section 8 for description.

APPENDIX 3B ORGANIZATION OF NGNP SYSTEMS AND COMPONENTS

The following extends the organization of facilities (overall systems and buildings & structures) in Figure 3.2-7 through Figure 3.2-12 to the full extent of plant systems, structures and components, insofar as identified at the preconceptual design level.

Nuclear Heat Supply System (NHSS)

- Reactor Unit System
  - Core Barrel Assembly
  - Core Structures Ceramics
  - Reactivity Control System
  - Reserve Shutdown System
  - Reactor Pressure Vessel
  - In-core Delivery System
- Core Conditioning System
  - CCS Blower
  - CCS Heat Exchanger
  - CCS Valves
  - CCS Piping
- Reactor Cavity Cooling System
- Fuel Handling and Storage System
  - Core Loading Subsystem
  - Sphere Storage Subsystem
  - Sphere Circulation Subsystem
  - Sphere Replenishment Subsystem
  - Fuel Handling Control Subsystem
  - Circulating Gas Subsystems
  - Sphere Decommissioning Subsystem
  - Auxiliary Gas Subsystem
  - High-level Waste Handling Subsystem
- Helium Service System
  - Inventory Control System
  - Helium Purification System
  - Helium Make-Up System
- NHSS Control & Instrumentation System
  - Operational Control System
  - Reactor Protection System
  - Equipment Protection System
- NHSS Cooling Water System
  - Auxiliary Component Cooling Water System
  - Equipment Protection Cooling Circuit

- NHSS Electrical System
- NHSS HVAC System
- Primary Loop Initial Cleanup System

Nuclear Heat Supply Buildings and Structures

- Nuclear Heat Supply Building

Heat Transport System (HTS)

- Primary Heat Transport System (PHTS)
  - PHTS Circulator
  - PHTS Valve
  - Intermediate Heat Exchanger (IHX)
    - IHX Core
    - Internal Ducts, Supports and Insulation
    - IHX Vessel, Including External Supports and Insulation
  - Piping (primary circuit from Reactor to IHX and between IHX vessels - both hot and cold legs)
    - Pressure Boundary Piping, Including External Supports and Insulation
    - Piping Internal Ducts, Supports and Insulation
  - Pressure Relief System
- Secondary Heat Transport System (SHTS)
  - SHTS Circulator
  - Helium Isolation Valves (if required)
  - Piping (secondary circuit, hot and cold legs, plus PCHX to SG)
    - Pressure Boundary Piping, Including External Supports and Insulation
    - Piping Internal Ducts, Supports and Insulation
  - SHTS Flow Coupling and Mixer

Hydrogen Production System (HPS)

- Feed and Utility Supply System
  - Feed Water Purification
  - Make-up Acid Supply
  - Make-up Caustic Supply
- Sulfuric Acid Decomposition System
  - Sulfuric Acid Decomposition Reactor (PCHX)
  - Process Coupling Heat Exchanger Vessel
  - Sulfuric Acid Concentrator
  - Sulfuric Acid Recuperator
  - SOx Cooler
  - Decomposer Feed Pump
  - Pressure Relief System
  - Sulfuric Acid Storage
  - Oxygen Offgas Compressor
- Electrolysis System
  - Electrolyzers
  - Electrolyzer Feed Pumps
  - Absorbers
  - Catholyte Coolers
  - Catholyte Circulation Pumps
  - Anolyte Circulation pumps
  - Pressure Relief System
- Product Purification System
- Product Storage and Delivery System
  - Product Monitoring/Metering System
- Waste Treatment and Disposal System
- HPS Control and Instrumentation System

Hydrogen Production Buildings and Structures

- Acid Decomposer Building
- Absorber and Electrolyzer Area
- HPS Auxiliary Equipment Area
- Sulfuric Acid and Caustic Storage and Receiving Area
- HPS Control Room
- HPS Electrical Building

Power Conversion System (PCS)

- Turbine Generator System
  - High-Pressure Turbine
  - Intermediate- Pressure Turbine
  - Low-Pressure Turbines
  - Turbine Control Valve System
  - Generator and Auxiliaries (incl. H2 and CO2)
  - Lube Oil System
  - Vacuum System
  - Air-cooled Condenser
    - Fans
    - Deaerator
    - A-frame
    - Piping
- Main Steam System
  - Steam Generator
    - Steam Generator Vessel
  - Startup/Shutdown Steam System
  - Extraction and Auxiliary Steam System
  - Steam Bypass/Dump System
  - Seal Water System
  - Gland Steam System
  - Steam Vents and Drains
  - Steam Pressure Relief System
- Feedwater and Condensate System
  - Heater Drains System
  - Feedwater Heater System
  - High-Pressure Feedwater Pump
  - Condensate Pumps
- PCS Control and Instrumentation System
- PCS Electrical Distribution System
- PCS Water Supply and Treatment System
  - Condensate Polishing System
  - Turbine Plant Sampling System
  - Chemical Feed System
- PCS Component Cooling Water System
- Turbine Building HVAC

Power Conversion Buildings and Structures

- Steam Generator Building
- PCS Building (Turbine Building)
- Aux Steam Boiler Room
- Condenser Area

Balance of Plant (BOP) Systems

- Plant Control and Instrumentation Systems
  - Central Control & Supervisory System
  - Radiation Monitoring System
  - Plant Communication System
  - Security System
- Plant Electrical Distribution System
  - Medium-voltage Electrical Distribution System
  - High-voltage Electrical Distribution System
  - Rectifier / Power Conditioning for HPS Electrolyzers
  - Standby AC Power System
- Plant Water System
- Auxiliary Cooling (Component Cooling) Water System
- Potable Water System
- Demineralized Water System
- Chilled Water System
- BOP HVAC System
- Compressed Air System
  - Instrument Air
  - Service Air
  - Breathing Air
- Equipment Handling System
- Decontamination System
- Waste Handling Systems
  - Solid and Condensed Waste Handling System
  - Liquid Waste Handling Systems
    - Clean Water System
    - Dirty Water System
- Wastewater Treatment System
- Fire Protection System
- Environmental Monitoring Systems
  - Seismic Monitoring System
  - Meteorological Monitoring System
- Sanitary Sewer System
- Storm Water System

- Gas Storage and Supply System
  - Inerting
  - Laboratory and Sampling
- Laboratories
  - Normal Sampling Systems
  - Post-Event Sampling Systems
- Auxiliary Boiler
- Storm Water System

BOP Buildings and Structures

- Control Building
- Ancillary Building
- Services Building
- Cooling Water Plant Building
- Water/Waste Water Treatment Building
- Sewage Treatment Building
- Administration Building
- Security Building
- Warehouse
- Other Buildings
  - Fuel Oil Storage Tank and Pump House
  - Component Cooling Pump Houses
  - Fire Pumphouse
  - Well Water Pump Houses
  - Switchyard
  - Gate House
  - Hazardous Storage Building

APPENDIX 3C FUNCTIONAL TREE

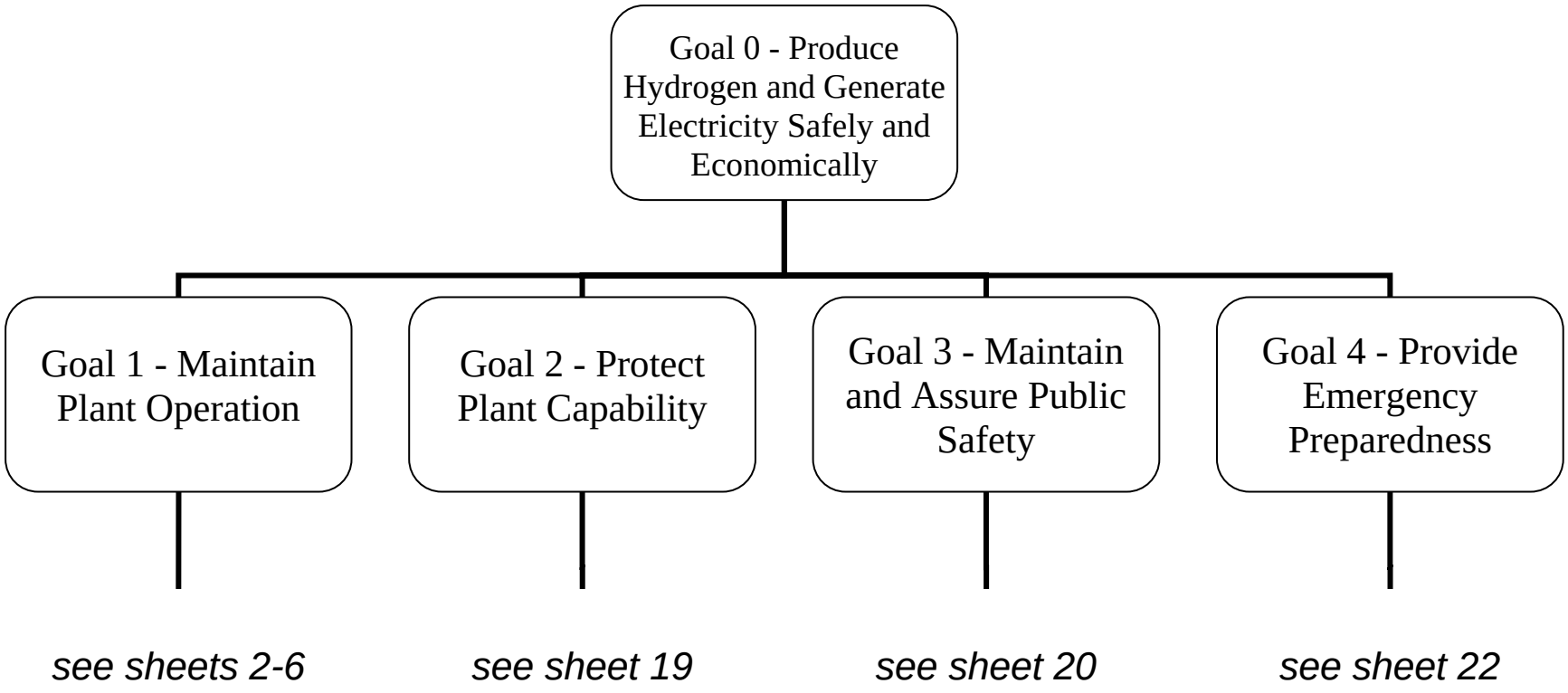

sheet 1

Shading indicates functions that are not applicable to the particular plant mode.

Mode: Whole Plant in Operation

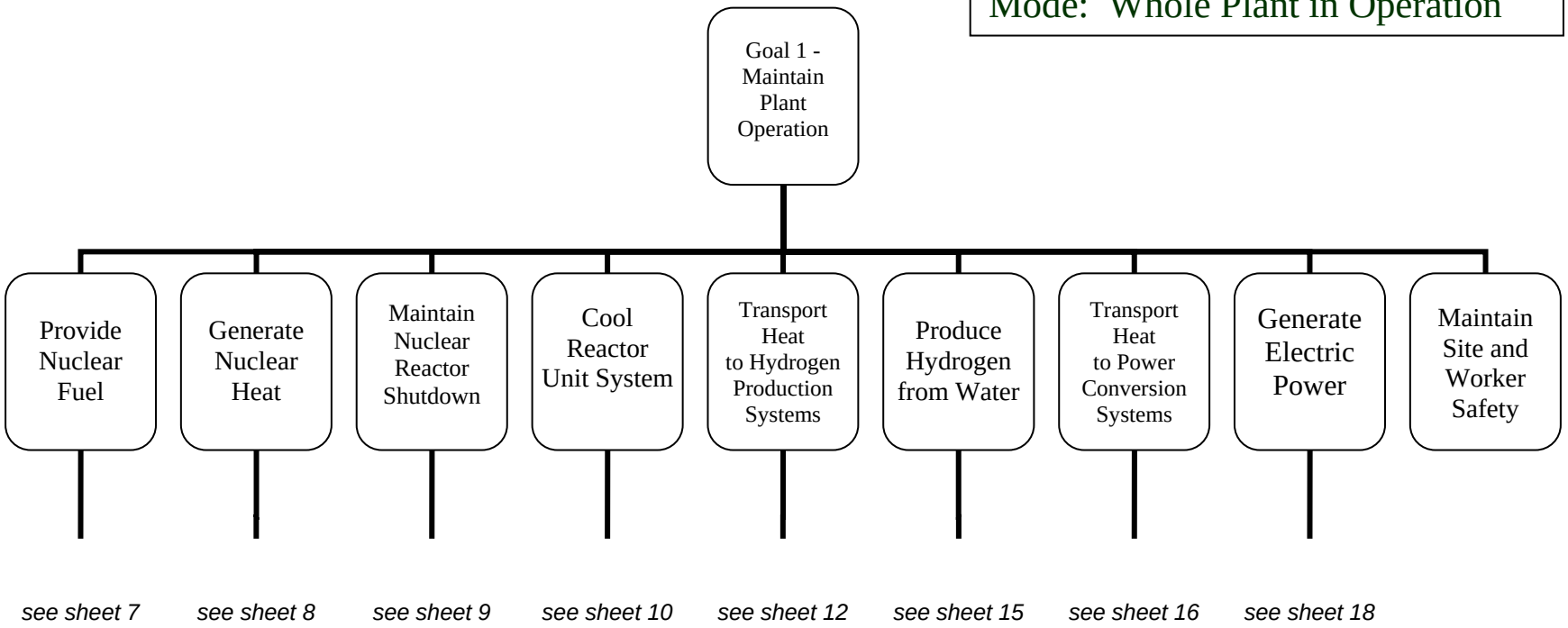

sheet 2

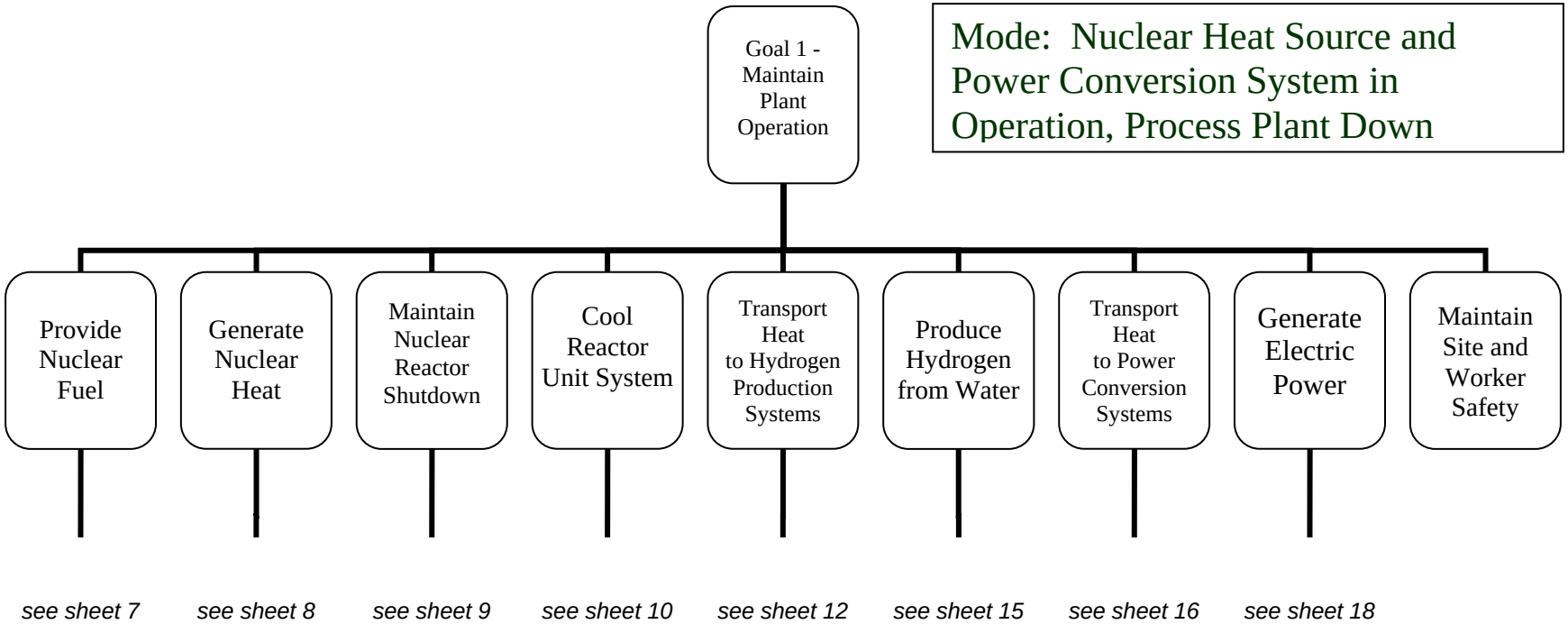
Goal 1 - Maintain Plant Operation
Mode: Nuclear Heat Source and Power Conversion System in Operation, Process Plant Down
Provide Nuclear Fuel
Generate Nuclear Heat
Maintain Nuclear Reactor Shutdown
Cool Reactor Unit System
Transport Heat to Hydrogen Production Systems
Produce Hydrogen from Water
Transport Heat to Power Conversion Systems
Generate Electric Power
Maintain Site and Worker Safety
see sheet 7
see sheet 8
see sheet 9
see sheet 10
see sheet 12
see sheet 15
see sheet 16
see sheet 18

sheet 3

Mode: Starting Up and Shutting Down – Heat Sink through PCS

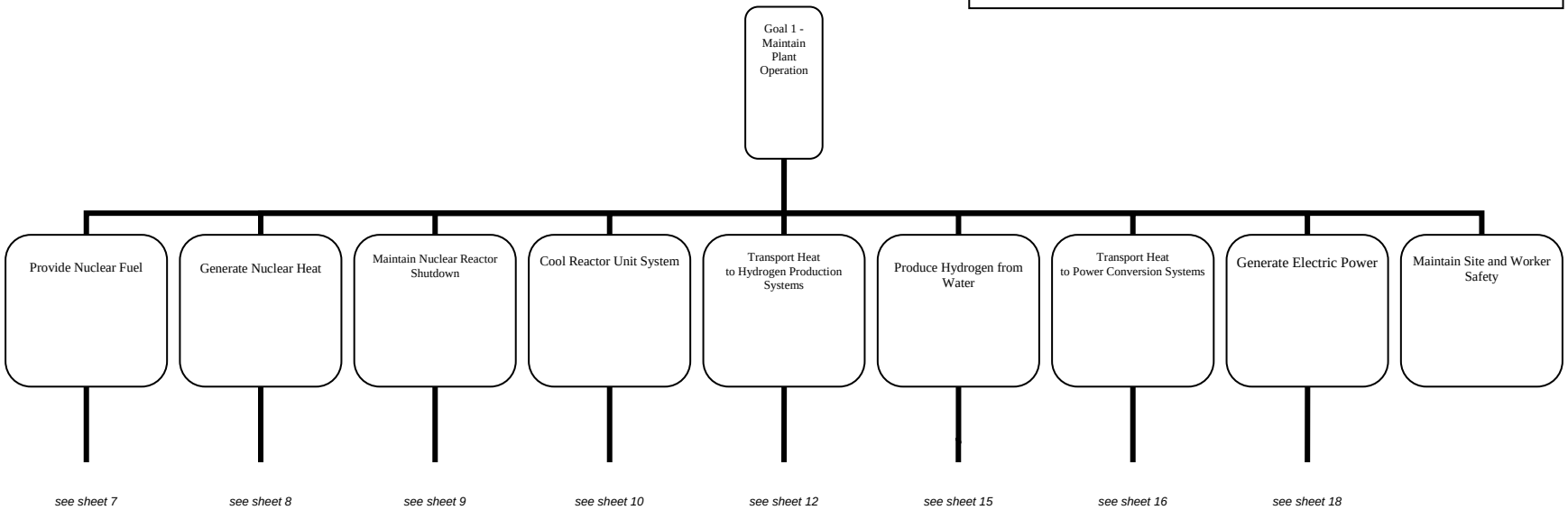

sheet 4

Mode: Starting Up and Shutting Down – Heat Sink through CCS

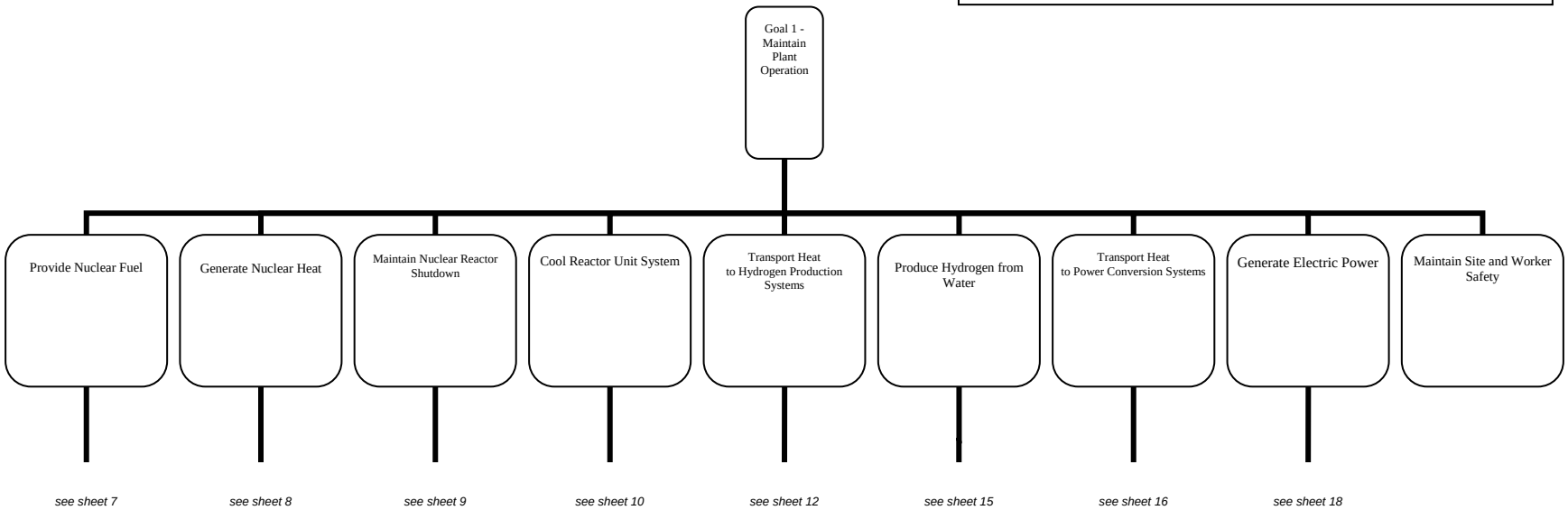

sheet 5

Mode: Shutdown

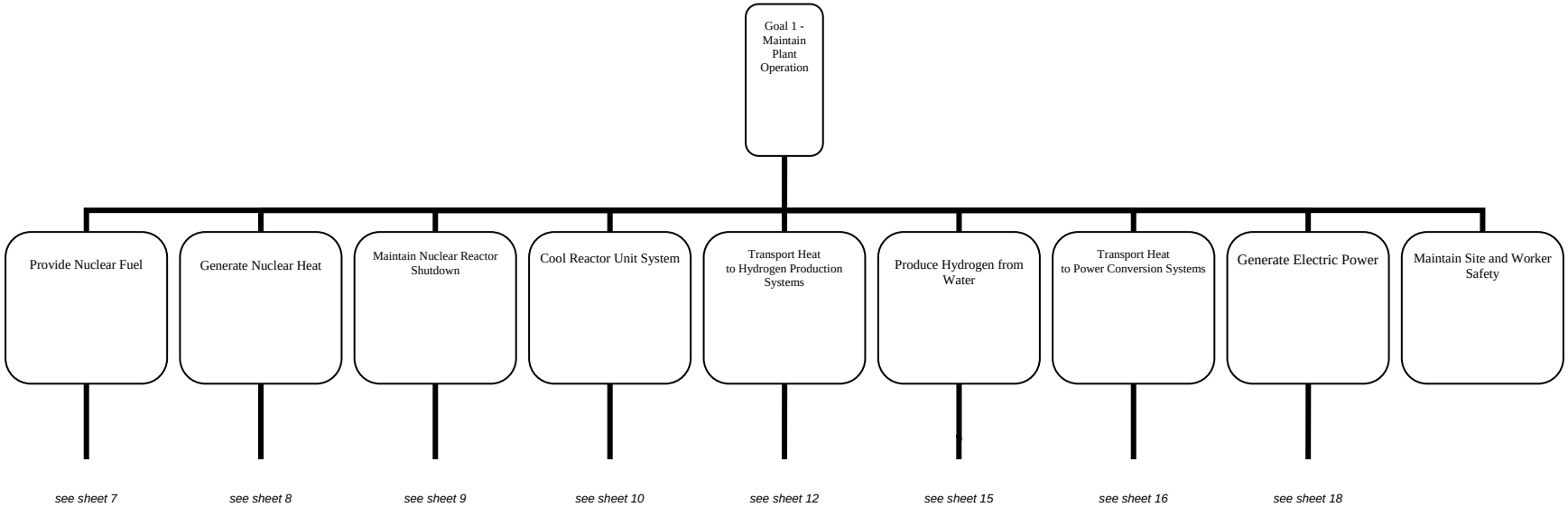

sheet 6

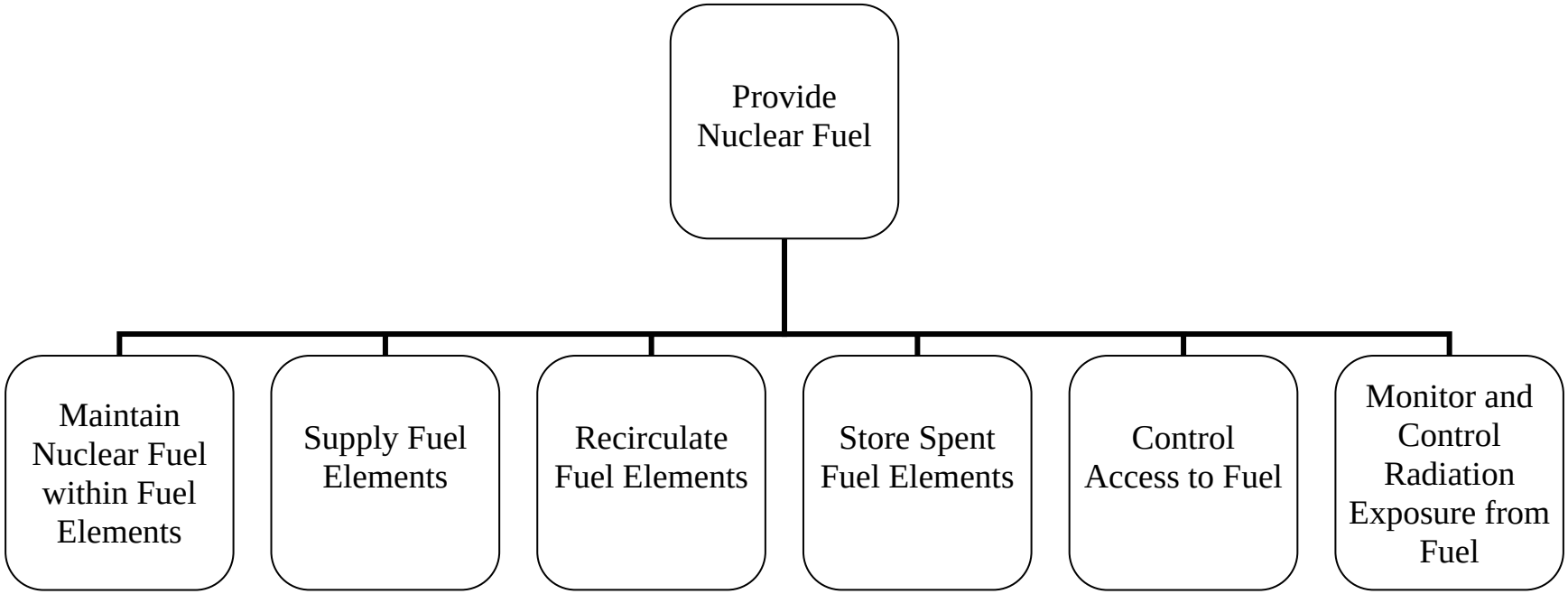
Provide Nuclear Fuel
Maintain Nuclear Fuel within Fuel Elements
Supply Fuel Elements
Recirculate Fuel Elements
Store Spent Fuel Elements
Control Access to Fuel
Monitor and Control Radiation Exposure from Fuel

sheet 7

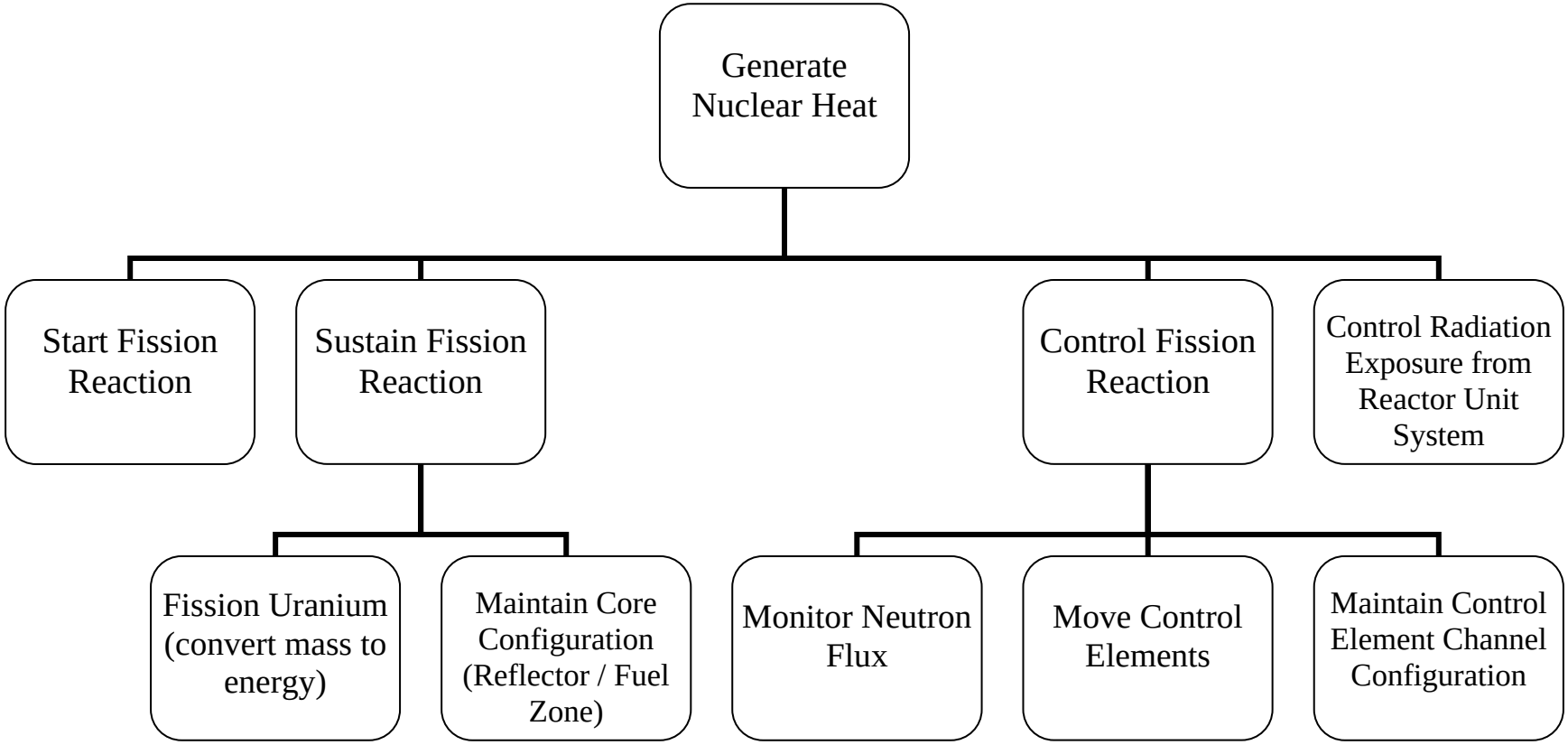
Generate Nuclear Heat
Start Fission Reaction
Sustain Fission Reaction
Control Fission Reaction
Control Radiation Exposure from Reactor Unit System
Fission Uranium (convert mass to energy)
Maintain Core Configuration (Reflector / Fuel Zone)
Monitor Neutron Flux
Move Control Elements
Maintain Control Element Channel Configuration

sheet 8

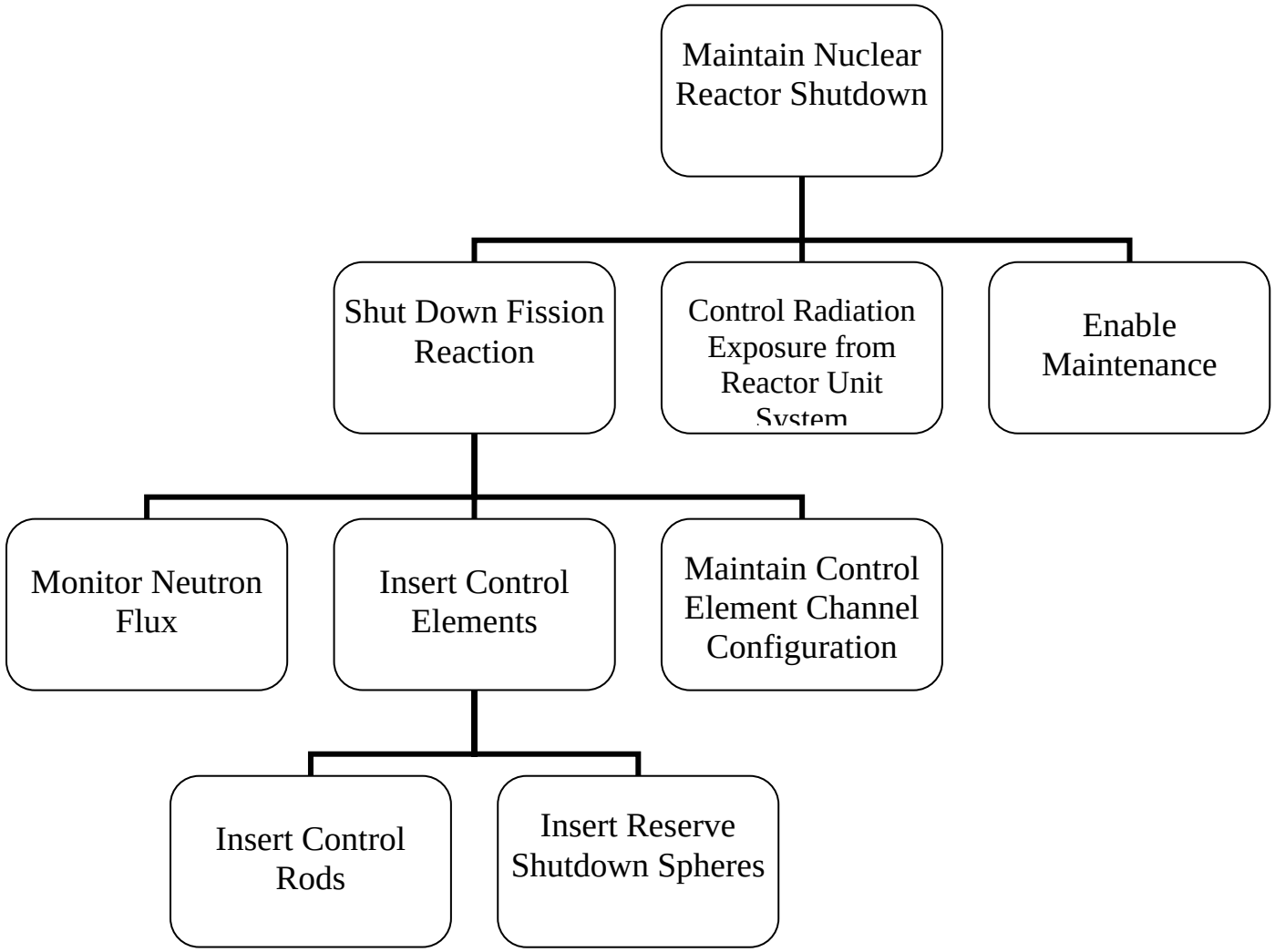
Maintain Nuclear Reactor Shutdown
Shut Down Fission Reaction
Control Radiation Exposure from Reactor Unit System
Enable Maintenance
Monitor Neutron Flux
Insert Control Elements
Maintain Control Element Channel Configuration
Insert Control Rods
Insert Reserve Shutdown Spheres

sheet 9

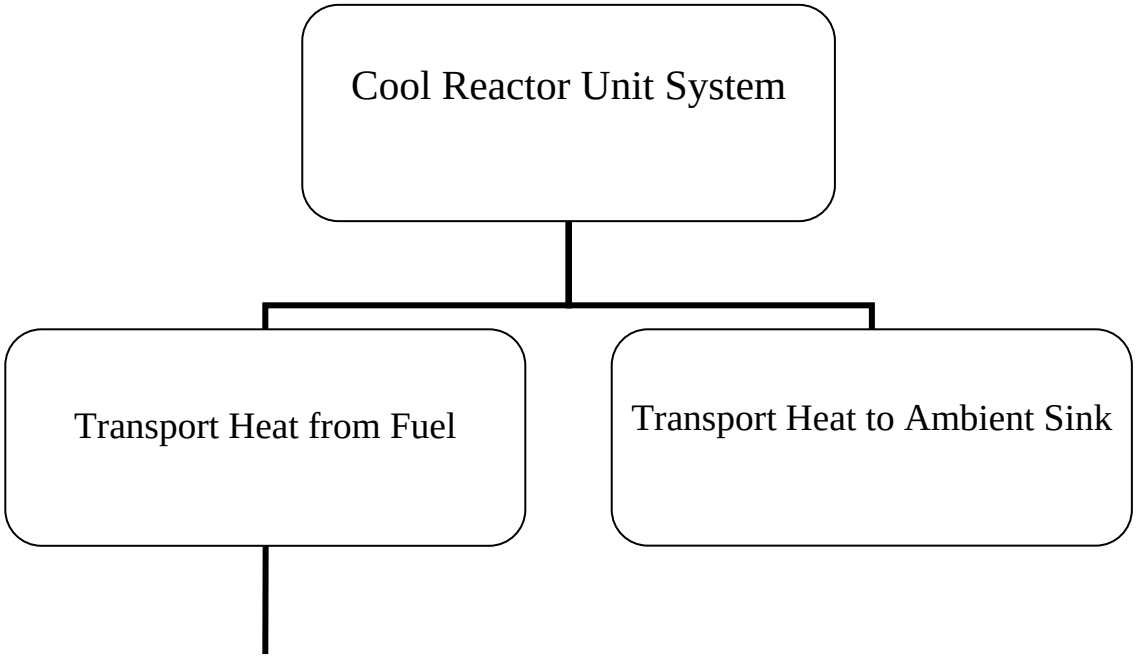

see sheet 11

sheet 10

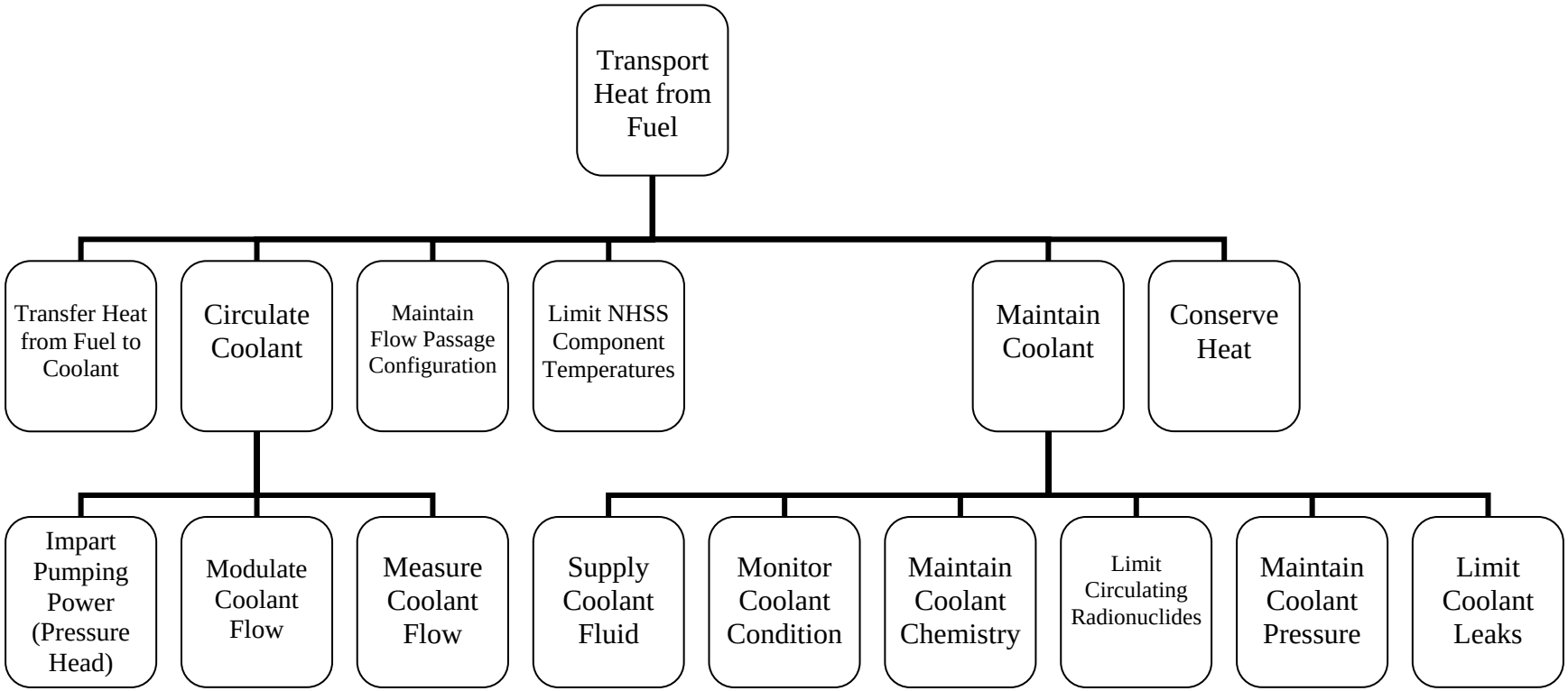
Transport Heat from Fuel
Transfer Heat from Fuel to Coolant
Circulate Coolant
Maintain Flow Passage Configuration
Limit NHSS Component Temperatures
Maintain Coolant
Conserve Heat
Impart Pumping Power (Pressure Head)
Modulate Coolant Flow
Measure Coolant Flow
Supply Coolant Fluid
Monitor Coolant Condition
Maintain Coolant Chemistry
Limit Circulating Radionuclides
Maintain Coolant Pressure
Limit Coolant Leaks

sheet 11

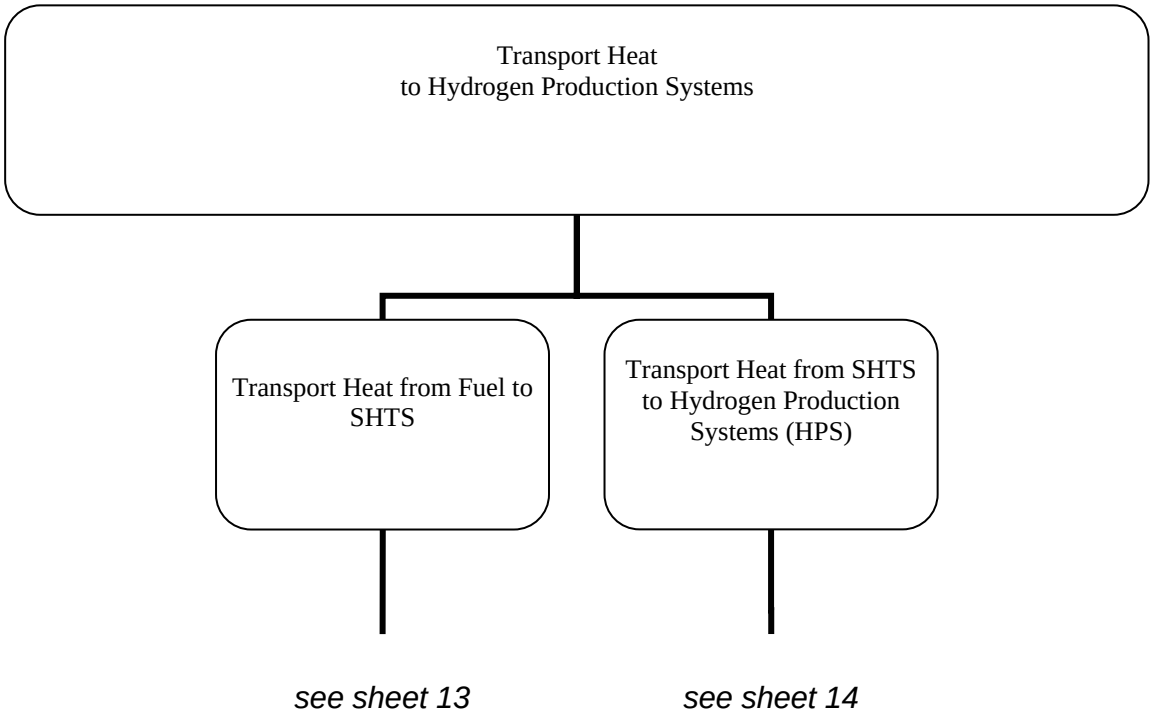
Transport Heat
to Hydrogen Production Systems
Transport Heat from Fuel to SHTS
Transport Heat from SHTS to Hydrogen Production Systems (HPS)
see sheet 13
see sheet 14

sheet 12

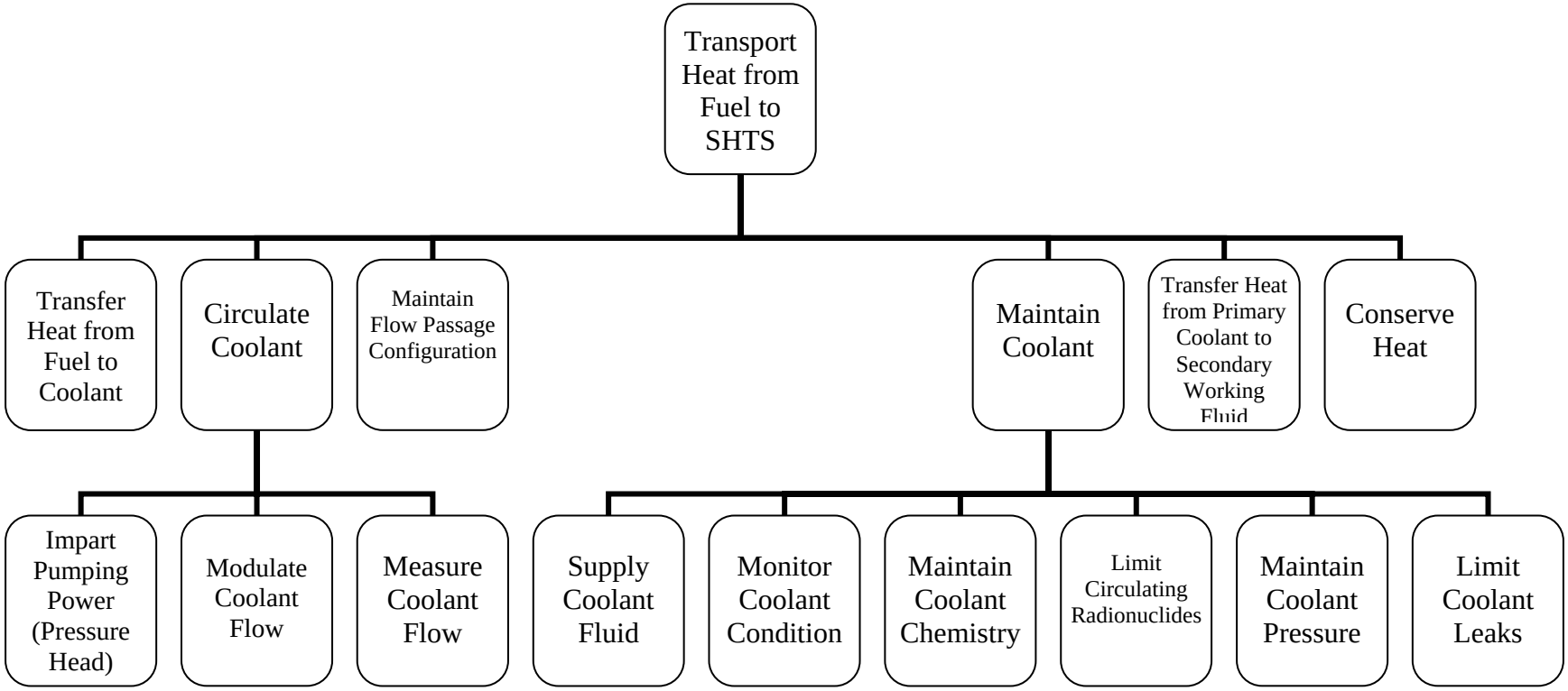
Transport Heat from Fuel to SHTS
Transfer Heat from Fuel to Coolant
Circulate Coolant
Maintain Flow Passage Configuration
Maintain Coolant
Transfer Heat from Primary Coolant to Secondary Working Fluid
Conserve Heat
Impart Pumping Power (Pressure Head)
Modulate Coolant Flow
Measure Coolant Flow
Supply Coolant Fluid
Monitor Coolant Condition
Maintain Coolant Chemistry
Limit Circulating Radionuclides
Maintain Coolant Pressure
Limit Coolant Leaks

sheet 13

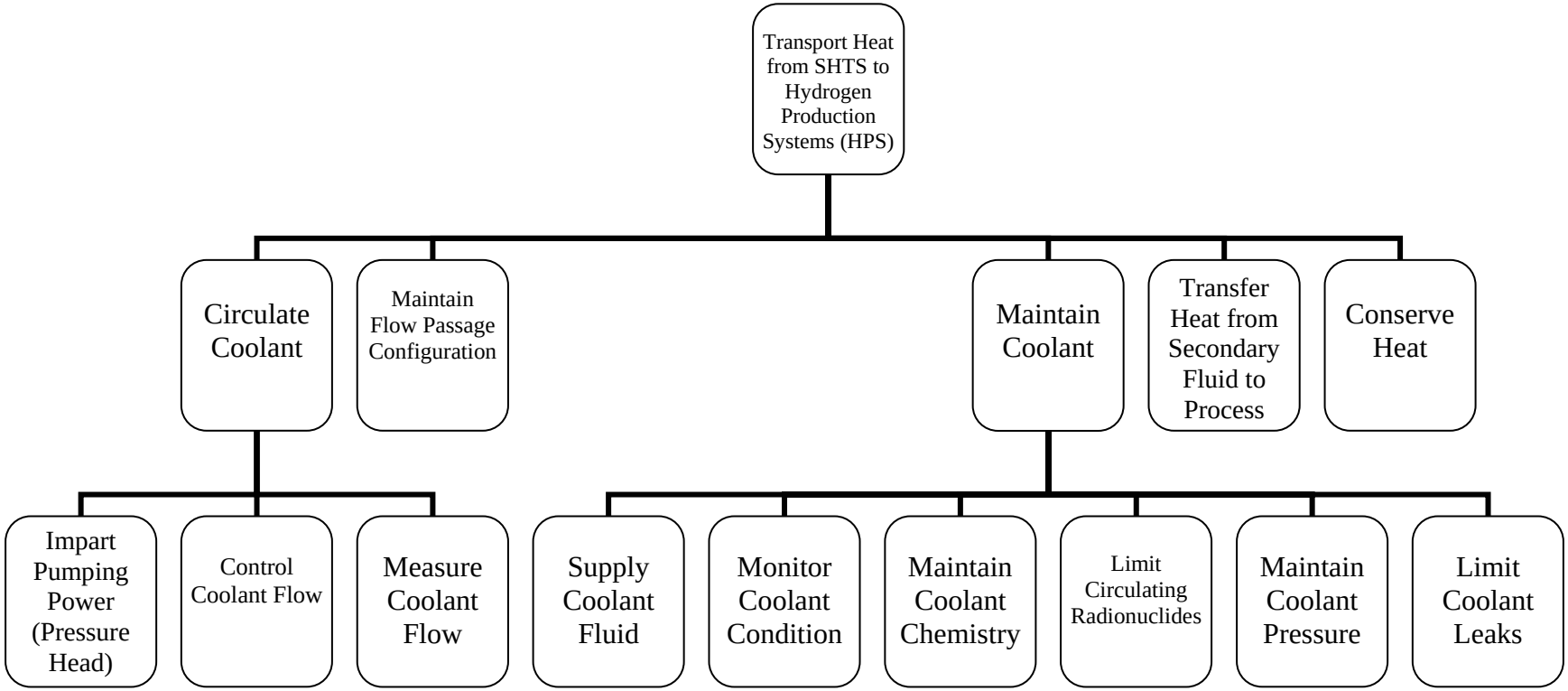
Transport Heat from SHTS to Hydrogen Production Systems (HPS)
Circulate Coolant
Maintain Flow Passage Configuration
Maintain Coolant
Transfer Heat from Secondary Fluid to Process
Conserve Heat
Impart Pumping Power (Pressure Head)
Control Coolant Flow
Measure Coolant Flow
Supply Coolant Fluid
Monitor Coolant Condition
Maintain Coolant Chemistry
Limit Circulating Radionuclides
Maintain Coolant Pressure
Limit Coolant Leaks

sheet 14

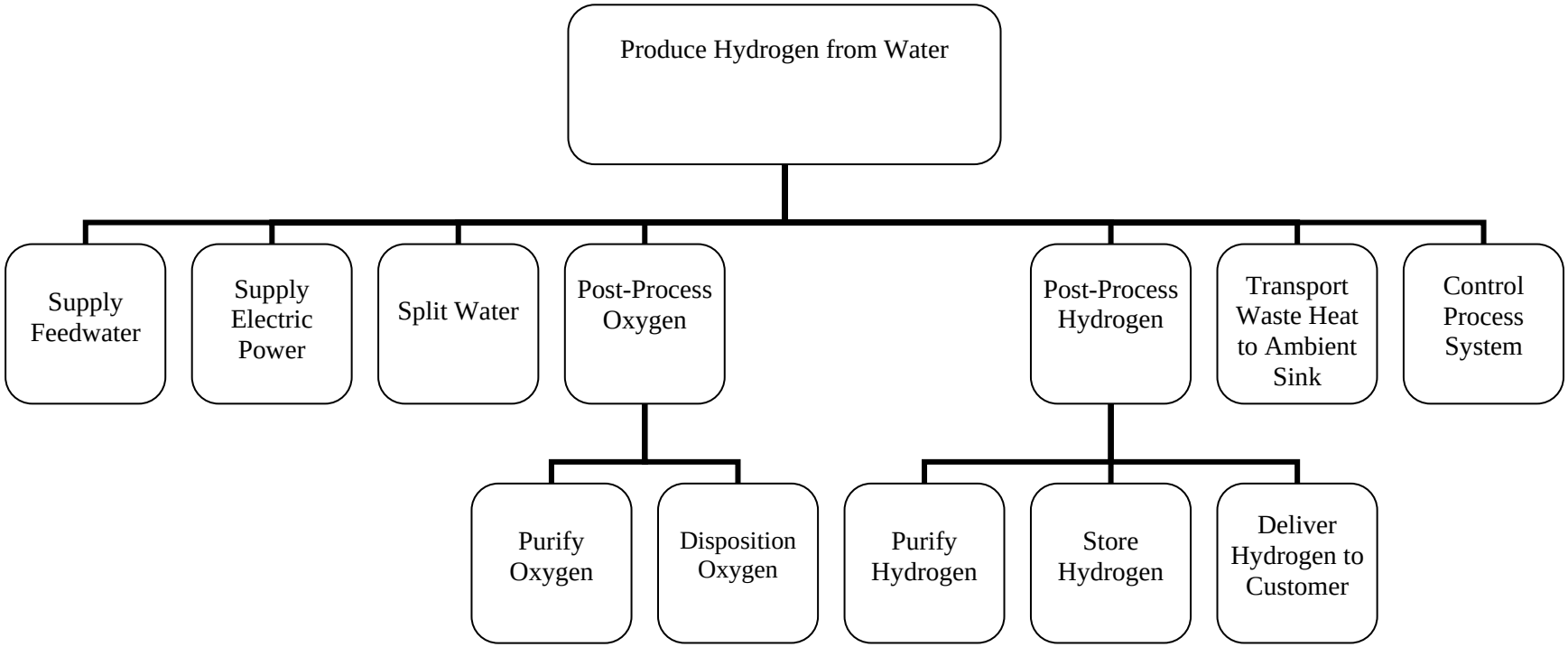
Produce Hydrogen from Water
Supply Feedwater
Supply Electric Power
Split Water
Post-Process Oxygen
Post-Process Hydrogen
Transport Waste Heat to Ambient Sink
Control Process System
Purify Oxygen
Disposition Oxygen
Purify Hydrogen
Store Hydrogen
Deliver Hydrogen to Customer

sheet 15

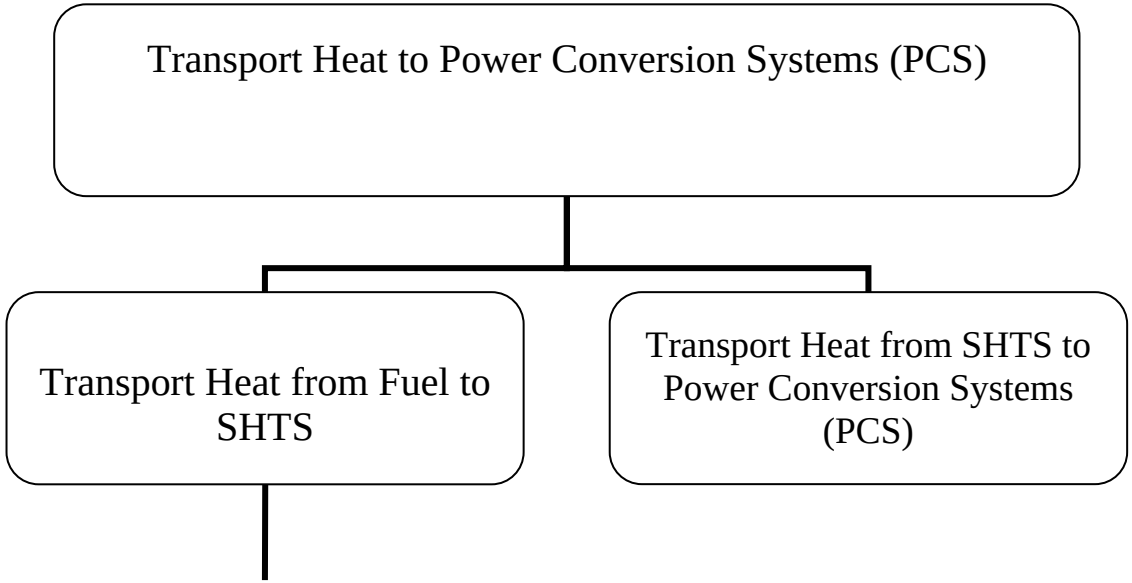

see sheet 13

sheet 16

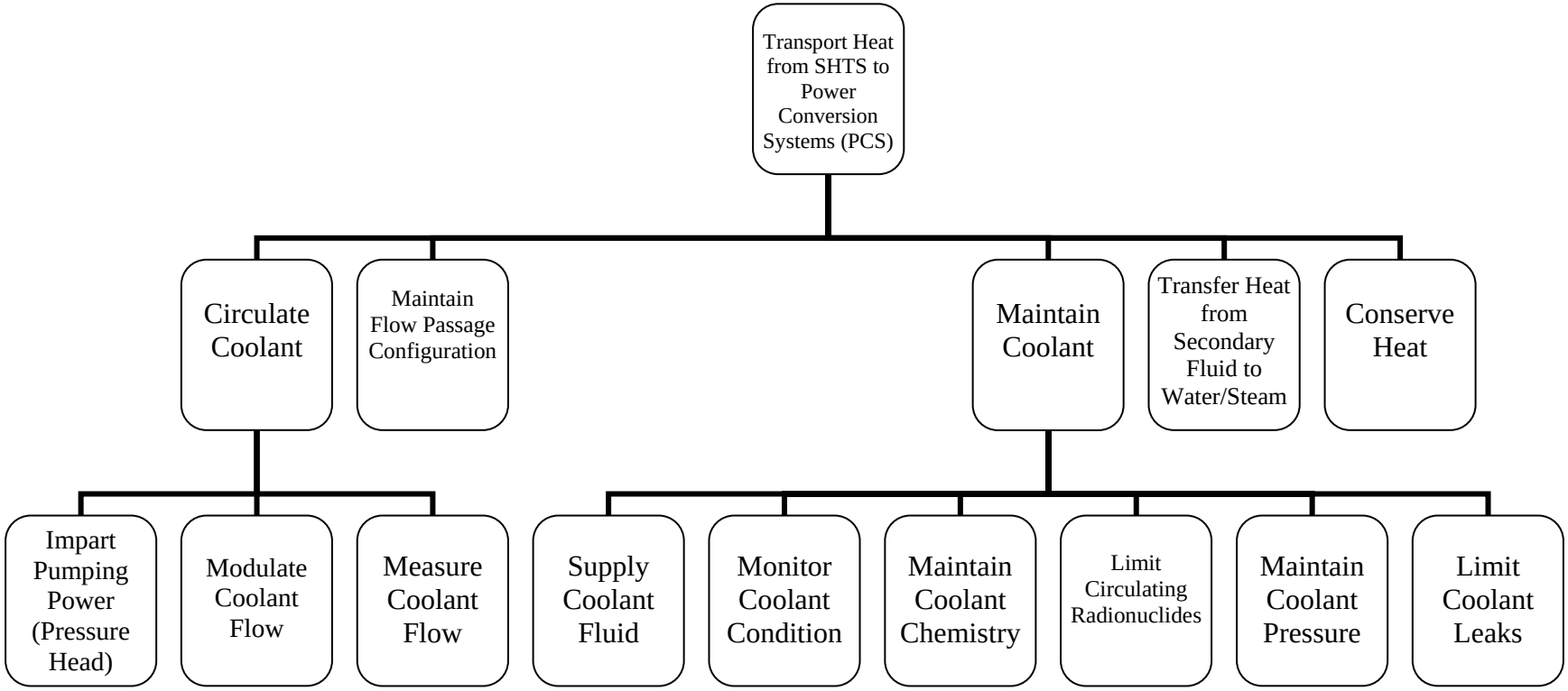
Transport Heat from SHTS to Power Conversion Systems (PCS)
Circulate Coolant
Maintain Flow Passage Configuration
Maintain Coolant
Transfer Heat from Secondary Fluid to Water/Steam
Conserve Heat
Impart Pumping Power (Pressure Head)
Modulate Coolant Flow
Measure Coolant Flow
Supply Coolant Fluid
Monitor Coolant Condition
Maintain Coolant Chemistry
Limit Circulating Radionuclides
Maintain Coolant Pressure
Limit Coolant Leaks

sheet 17

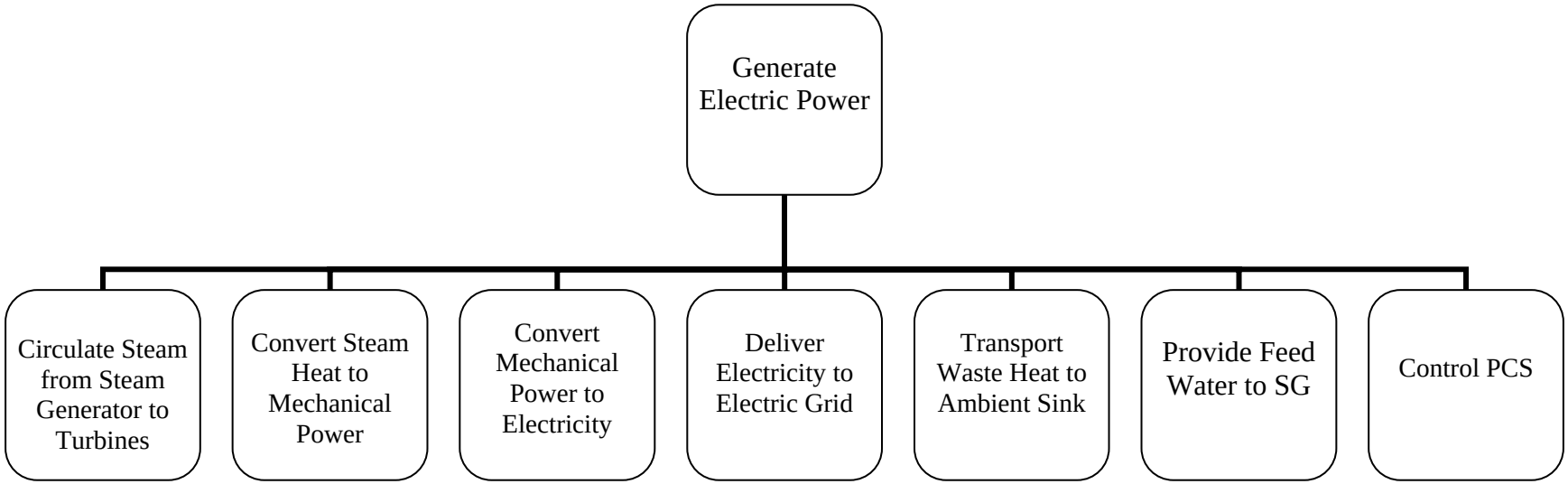
Generate Electric Power
Circulate Steam from Steam Generator to Turbines
Convert Steam Heat to Mechanical Power
Convert Mechanical Power to Electricity
Deliver Electricity to Electric Grid
Transport Waste Heat to Ambient Sink
Provide Feed Water to SG
Control PCS

sheet 18

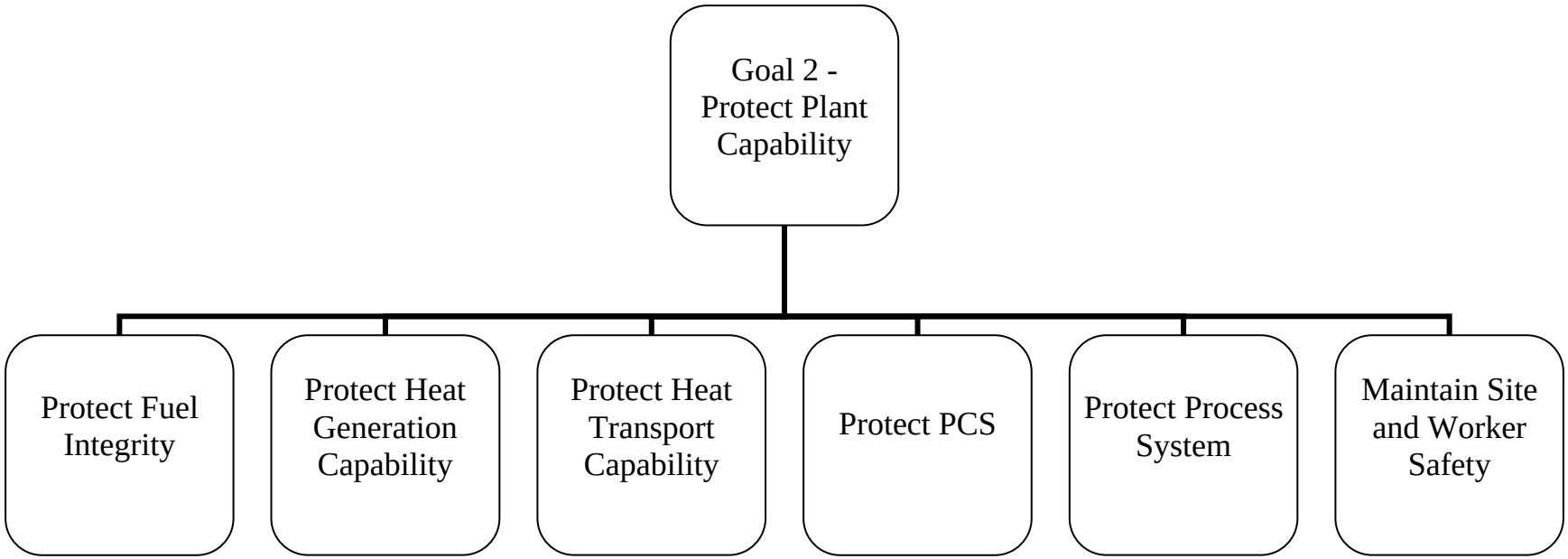
Goal 2 - Protect Plant Capability
Protect Fuel Integrity
Protect Heat Generation Capability
Protect Heat Transport Capability
Protect PCS
Protect Process System
Maintain Site and Worker Safety

sheet 19

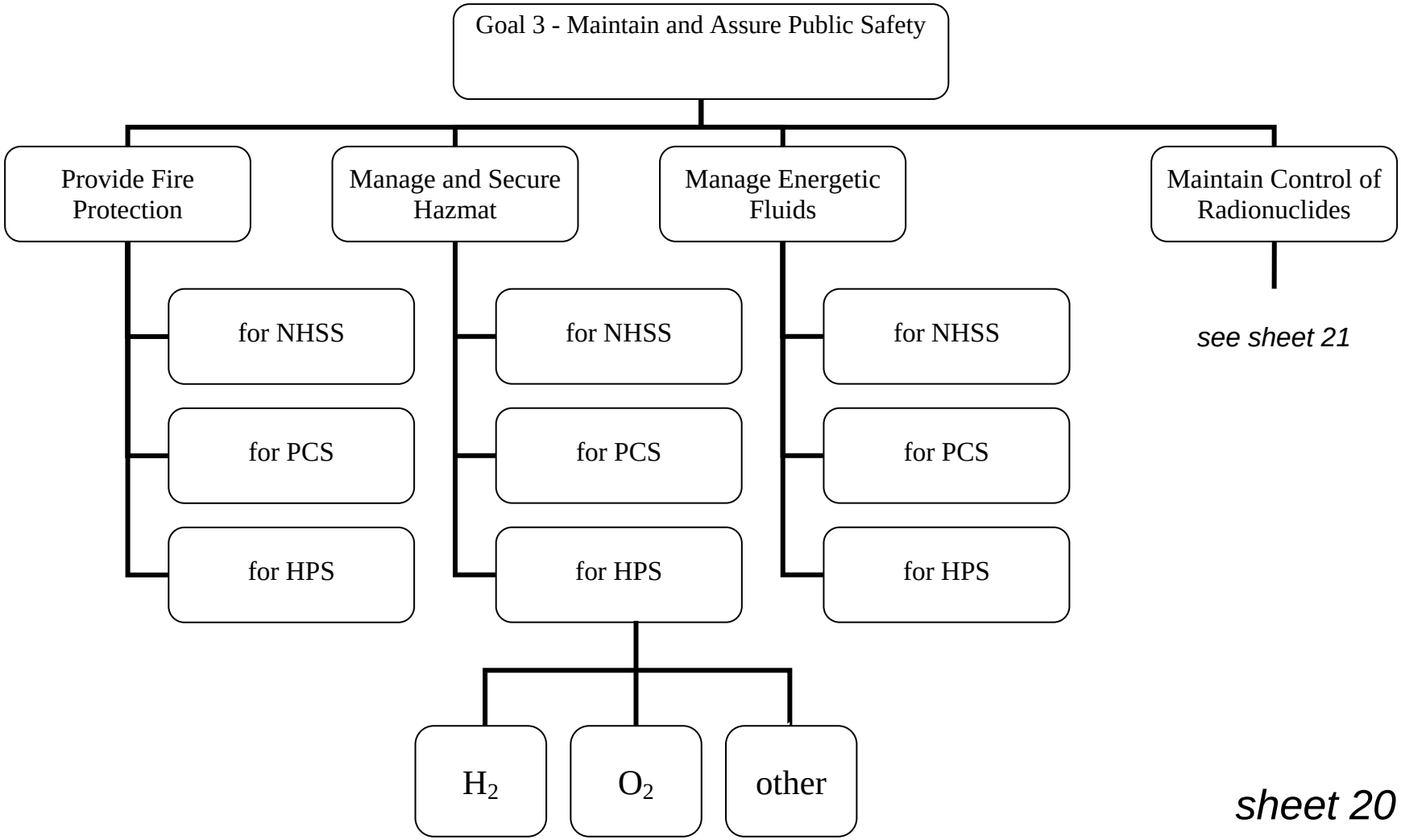
Goal 3 - Maintain and Assure Public Safety
Provide Fire Protection
Manage and Secure Hazmat
Manage Energetic Fluids
Maintain Control of Radionuclides
for NHSS
for PCS
for HPS
for NHSS
for PCS
for HPS
for NHSS
for PCS
for HPS
see sheet 21
H_2
O_2
other

sheet 20

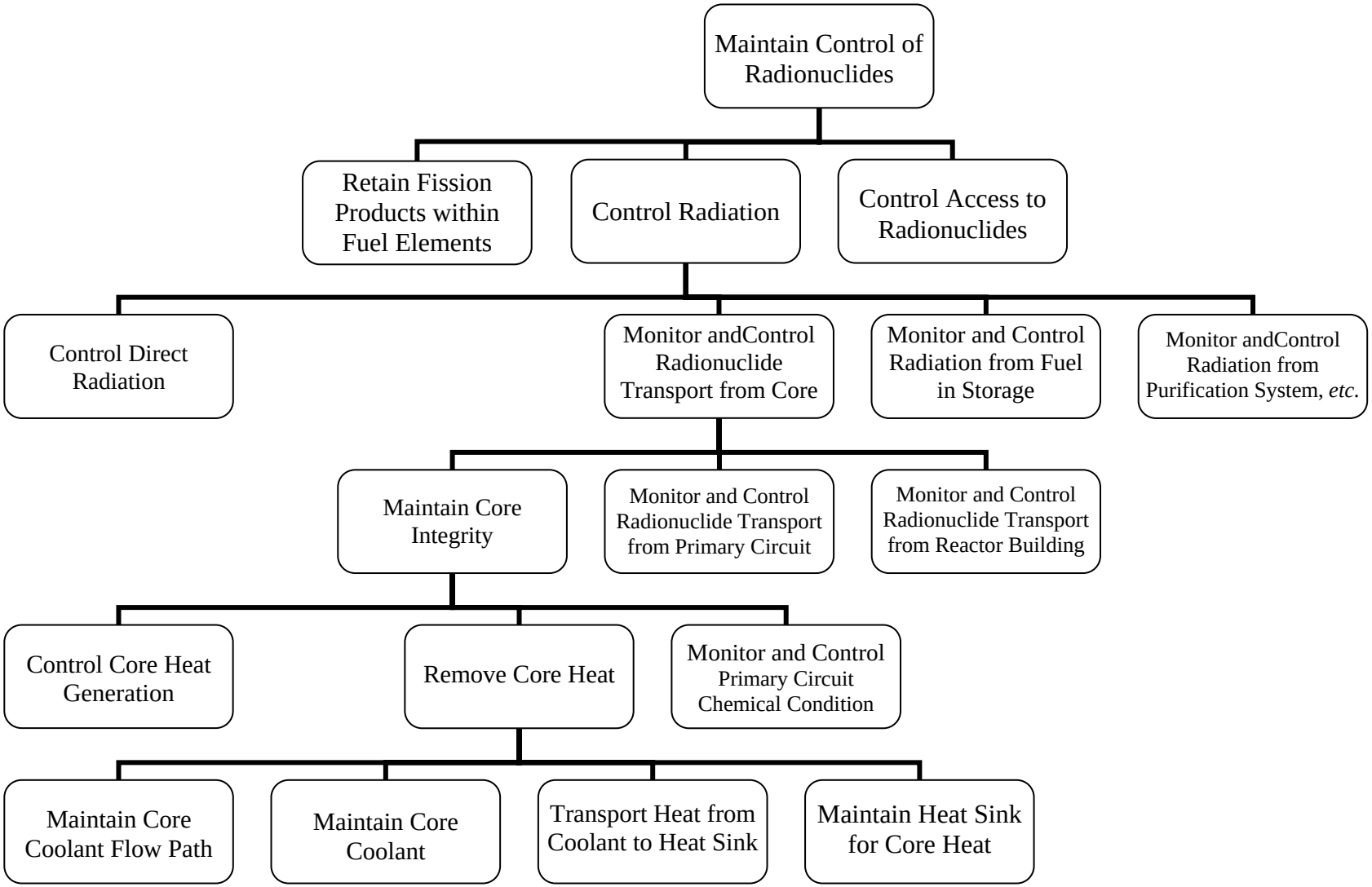
Maintain Control of Radionuclides
Retain Fission Products within Fuel Elements
Control Radiation
Control Access to Radionuclides
Control Direct Radiation
Monitor andControl Radionuclide Transport from Core
Monitor and Control Radiation from Fuel in Storage
Monitor andControl Radiation from Purification System, *etc.*
Maintain Core Integrity
Monitor and Control Radionuclide Transport from Primary Circuit
Monitor and Control Radionuclide Transport from Reactor Building
Control Core Heat Generation
Remove Core Heat
Monitor and Control Primary Circuit Chemical Condition
Maintain Core Coolant Flow Path
Maintain Core Coolant
Transport Heat from Coolant to Heat Sink
Maintain Heat Sink for Core Heat

sheet 21

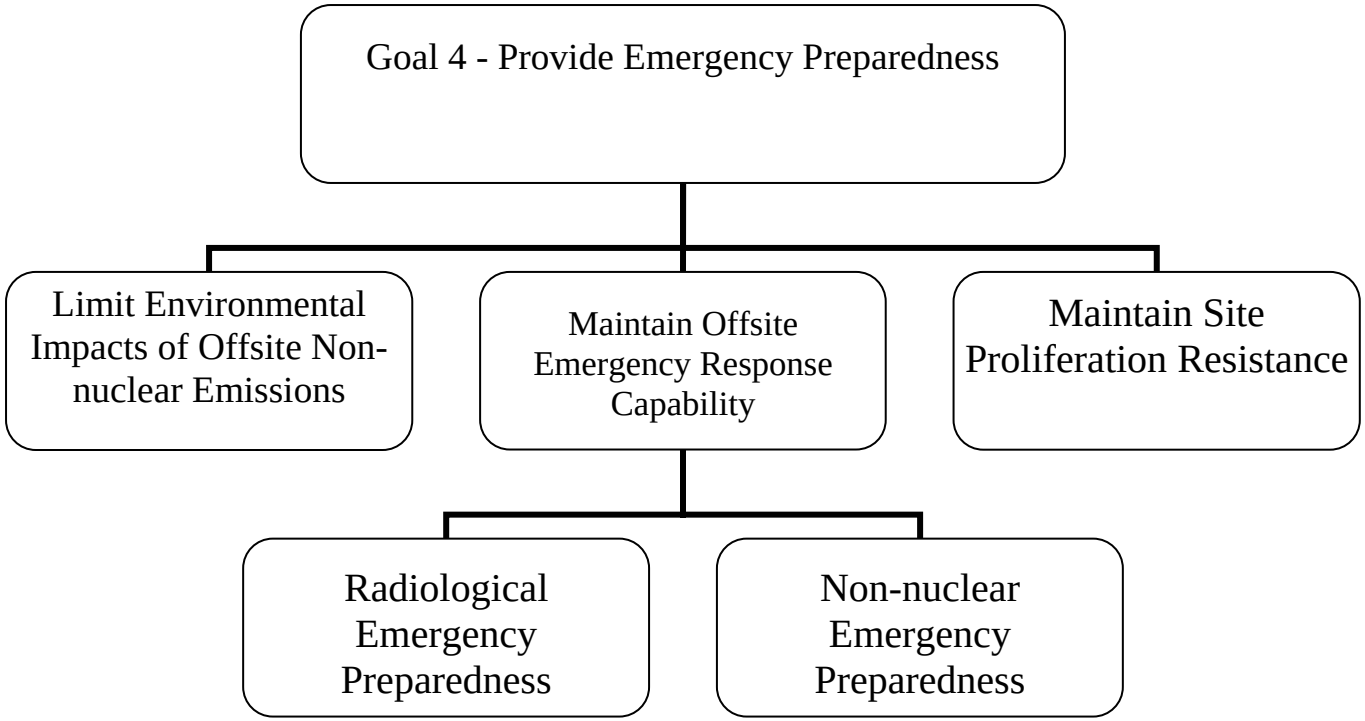
Goal 4 - Provide Emergency Preparedness
Limit Environmental Impacts of Offsite Non-nuclear Emissions
Maintain Offsite Emergency Response Capability
Maintain Site Proliferation Resistance
Radiological Emergency Preparedness
Non-nuclear Emergency Preparedness

sheet 22

APPENDIX 3D FINAL DESIGN REVIEW PRESENTATION TO BEA

See Section 2, Appendix 2A.

NGNP-04-RPT-001 May 2007
Revision 0

NGNP and Hydrogen Production Preconceptual Design Report

SECTION 4: NUCLEAR HEAT SUPPLY SYSTEM

Revision 0

APPROVALS

Function	Printed Name and Signature	Date
Author	Herman van Antwerpen M-Tech Industrial	May 18, 2007
Reviewer	Jan van Ravenswaay M-Tech Industrial	May 18, 2007
Approval	Michael Correia Pebble Bed Modular Reactor (Pty) Ltd	May 18, 2007

Westinghouse Electric Company LLC
Nuclear Power Plants
Post Office Box 355
Pittsburgh, PA 15230-0355

©2007 Westinghouse Electric Company LLC
All Rights Reserved

LIST OF CONTRIBUTORS

Name and Organization	Date
Kobus van der Merwe M-Tech Industrial (Pty) Ltd	May 2007
Andre van der Walt M-Tech Industrial (Pty) Ltd	May 2007
Pieter van der Westhuizen M-Tech Industrial (Pty) Ltd	May 2007
Hennie Niemand M-Tech Industrial (Pty) Ltd	May 2007
Pieter Venter Pebble Bed Modular Reactor (Pty) Ltd	May 2007
Robert Single Westinghouse Electric Company	May 2007
Fred Silady Technology Insights	May 2007
Hans Chi Technology Insights	May 2007
Michael Correia Pebble Bed Modular Reactor (Pty) Ltd	May 2007

BACKGROUND INTELLECTUAL PROPERTY

Section	Title	Description
NONE		NONE

REVISION HISTORY

RECORD OF CHANGES

Revision No.	Revision Made by	Description	Date
0	Herman van Antwerpen M-Tech Industrial (Pty) Ltd	Initial Issue	May 18, 2007

DOCUMENT TRACEABILITY

Created to support the following Document(s)	Document Number	Revision
NGNP and Hydrogen Production Preconceptual Design Report	NGNP-01-RPT-001	0

TABLE OF CONTENTS

LIST OF TABLES **4-7**

LIST OF FIGURES **4-8**

4 NUCLEAR HEAT SUPPLY SYSTEM **4-9**

SUMMARY AND CONCLUSIONS **4-9**

INTRODUCTION **4-11**

4.1 NUCLEAR HEAT SUPPLY SYSTEM OVERVIEW **4-12**

4.2 SYSTEMS **4-13**

4.2.1 REACTOR UNIT SYSTEM **4-13**

4.2.1.1 Fuel Core 4-18
4.2.1.2 Core Barrel Assembly 4-19
4.2.1.2.1 System Functions and Requirements 4-19
4.2.1.2.2 System Description 4-20
4.2.1.2.3 Major System Interfaces 4-22
4.2.1.2.4 System Operation 4-22
4.2.1.3 Core Structure Ceramics 4-23
4.2.1.3.1 System Functions and Requirements 4-23
4.2.1.3.2 System Description 4-24
4.2.1.3.3 Major System Interfaces 4-26
4.2.1.3.4 System Operation 4-27
4.2.1.4 Reactor Pressure Vessel 4-27
4.2.1.4.1 System Functions and Requirements 4-27
4.2.1.4.2 System Description 4-28
4.2.1.4.3 Major System Interfaces 4-29
4.2.1.4.4 System Operation 4-29
4.2.1.5 Reactivity Control System 4-29
4.2.1.5.1 System Functions and Requirements 4-29
4.2.1.5.2 System Description 4-30
4.2.1.5.3 Major System Interfaces 4-31
4.2.1.5.4 System Operation 4-32
4.2.1.6 Reserve Shutdown System 4-32
4.2.1.6.1 System Functions and Requirements 4-32
4.2.1.6.2 System Description 4-33
4.2.1.6.3 Major System Interfaces 4-36
4.2.1.6.4 System Operation 4-36
4.2.1.7 In Core Delivery System 4-36
4.2.1.7.1 System Functions and Requirements 4-36
4.2.1.7.2 System Description 4-37
4.2.1.7.3 Major System Interfaces 4-37
4.2.1.7.4 System Operation 4-37

4.2.2 CORE CONDITIONING SYSTEM **4-38**

4.2.2.1 System Functions and Requirements 4-38
4.2.2.2 System Description 4-38
4.2.2.3 Major Components 4-39

4.2.2.4 Major System Interfaces 4-40
4.2.2.5 System Operation....4-40

4.2.3 FUEL HANDLING AND STORAGE SYSTEM....4-42
4.2.3.1 System Functions and Requirements 4-42
4.2.3.2 System Description 4-42
4.2.3.3 Major System Interfaces 4-43
4.2.3.4 System Operation....4-43

4.2.4 REACTOR CAVITY COOLING SYSTEM 4-49
4.2.4.1 System Functions and Requirements 4-49
4.2.4.2 System Description 4-49
4.2.4.3 Major System Interfaces 4-50
4.2.4.4 System Operation....4-50

4.2.5 PRIMARY LOOP INITIAL CLEAN-UP SYSTEM 4-53
4.2.5.1 System Functions and Requirements 4-53
4.2.5.2 System Description 4-53
4.2.5.3 Major System Interfaces 4-53
4.2.5.4 System Operation....4-54

4.2.6 NHSS COOLING WATER SYSTEM....4-56
4.2.6.1 System Functions and Requirements 4-56
4.2.6.2 System Description 4-56
4.2.6.3 Major System Interfaces 4-58
4.2.6.4 System Operation....4-58

4.2.7 HELIUM SERVICES SYSTEM....4-60
4.2.7.1 System Functions and Requirements 4-60
4.2.7.2 System Description 4-60
4.2.7.3 Major System Interfaces 4-62
4.2.7.4 System Operation....4-62

4.2.8 NUCLEAR HEAT SUPPLY SYSTEM HVAC SYSTEM....4-63
4.2.8.1 System Functions and Requirements 4-63
4.2.8.2 System Description 4-63
4.2.8.3 Major System Interfaces 4-64
4.2.8.4 System Operation....4-64

4.2.9 NHSS ELECTRICAL SYSTEMS 4-65
4.2.9.1 System Functions and Requirements 4-65
4.2.9.2 System Description 4-65
4.2.9.3 Major System Interfaces 4-66
4.2.9.4 System Operation....4-66

4.2.10 NHSS CONTROL AND INSTRUMENTATION SYSTEM....4-68
4.2.10.1 NHSS C&I General Overview....4-68
4.2.10.2 Equipment Protection System....4-68
4.2.10.2.1 System Functions and Requirements 4-68
4.2.10.2.2 System Description 4-69
4.2.10.2.3 Major System Interfaces....4-70
4.2.10.2.4 System Operation 4-71

4.2.10.3 Reactor Protection System 4-72
4.2.10.3.1 System Functions and Requirements 4-72
4.2.10.3.2 System Description 4-73
4.2.10.3.3 Major System Interfaces 4-74
4.2.10.3.4 System Operation 4-75

4.3 DESIGN DEVELOPMENT NEEDS 4-77

4.3.1 REFLECTOR GRAPHITE 4-77
4.3.1.1 Functions 4-77
4.3.1.2 Key Requirements 4-77
4.3.1.3 Design Data Needs 4-78

4.4 NHSS COMPLEXITY, RISKS AND FUTURE STUDIES 4-84

4.4.1 COMPLEXITIES AND RISKS 4-84

4.4.2 FUTURE STUDIES 4-84

REFERENCES 4-86

LIST OF ASSUMPTIONS 4-87

APPENDICES 4-88

APPENDIX 4A FINAL DESIGN REVIEW PRESENTATION TO BEA 4-88

LIST OF TABLES

NONE

LIST OF FIGURES

Figure 4.2-1: Layout of the Reactor Unit System in Relation to the PHTS, SHTS, SG and PCHX. 4-13
Figure 4.2-2: General Arrangement of the Reactor Unit System Including the Reactor Pressure Vessel 4-14
Figure 4.2-3: Vertical Schematic Section Through the Reactor Unit 4-15
Figure 4.2-4: Horizontal Schematic Section Through the Reactor Unit System Without the Core Inlet and Outlet Pipes 4-16
Figure 4.2-5: Helium Flow Path Configuration through the Reactor Unit System 4-17
Figure 4.2-6: Core Barrel Assembly Layout 4-20
Figure 4.2-7: Horizontal Section of the Side Reflector 4-25
Figure 4.2-8: Section Through the Central Reflector. 4-26
Figure 4.2-9: Reactivity Control System Layout 4-31
Figure 4.2-10: Reserve Shutdown System Schematic Layout 4-34
Figure 4.2-11: Simplified Core Conditioning System Schematic (2 x 100% System) 4-39
Figure 4.2-12: Initial Loading of Graphite Spheres into Core 4-44
Figure 4.2-13: Start-up Core Circulation 4-45
Figure 4.2-14: Simplified Process Flow Diagram for Normal Operation 4-47
Figure 4.2-15: Schematic Representation of the Reactor Cavity Cooling System Function – Active Mode 4-51
Figure 4.2-16: Schematic Representation of the Reactor Cavity Cooling System Function – Passive Mode 4-52
Figure 4.2-17: PLICS Drying Stage Functional Flow Diagram 4-54
Figure 4.2-18: PLICS Evacuation Stage Functional Flow Diagram (Initial Clean-up of PHTS) 4-55
Figure 4.2-19: Simplified Schematic Diagram for Active Cooling Circuit 4-57
Figure 4.2-20: Simplified Schematic Diagram for Equipment Protection Cooling Circuit 4-58
Figure 4.2-21: EPS Architecture Overview 4-70
Figure 4.2-22: Elements of EPS Functions 4-72
Figure 4.2-23: Reactor Protection System – Interconnectivity 4-73
Figure 4.3-1: Irradiation Requirements for NGNP Reflector Graphite 4-78

4 NUCLEAR HEAT SUPPLY SYSTEM

SUMMARY AND CONCLUSIONS

The Nuclear Heat Supply System (NHSS) of the Next Generation Nuclear Plant (NGNP) serves to heat the fluid in the Primary Heat Transport System (PHTS) by means of a nuclear reaction in the Reactor Unit System (RUS). The PHTS circulates the primary coolant from the Reactor Unit System to the Intermediate Heat Exchanger (IHX), where the heat from the RUS is transferred to the Secondary Heat Transport System (SHTS). The SHTS transports heat to the Hydrogen Production System (HPS) and the Power Conversion System (PCS), where the heat is either utilized or, in certain plant operating modes, rejected to the environment.

The NHSS design is based on the Pebble Bed Modular Reactor (PBMR) Demonstration Power Plant (DPP) reactor design, which uses the high-temperature gas-cooled reactor technology which was originally developed in Germany. This implies the use of spherical fuel elements, referred to as pebbles, which are in size and physical characteristics the same as the fuel which was developed for the German High-Temperature Reactor (HTR) programs. Similar to the German pebble bed reactors, the PBMR design uses an online refueling scheme.

The NHSS consists of the RUS and all the support systems required for its operation and maintenance. The RUS consists of the following systems:

- Core Barrel Assembly
- Core Structure Ceramics
- Reactor Pressure Vessel
- Reactivity Control System
- Reserve Shutdown System
- In Core Delivery System

The main support systems for the RUS are:

- Core Conditioning System
- Fuel Handling and Storage System
- Reactor Cavity Cooling System
- Primary Loop Initial Clean-up System
- NHSS Cooling Water System
- Helium Services System
- NHSS HVAC System
- NHSS Electrical System
- NHSS Control and Instrumentation System

For application in the NGNP project, the most significant change to the DPP reactor is an up rating of the continuous power level from 400MWt to 500MWt. The reactor inlet/outlet temperatures changed from 500ºC/900ºC to 350ºC/950ºC, while the reactor mass flow decreased from 193kg/s to 161kg/s. Details have been provided in NGNP special study 20.2 [4-1].

Another important change to the DPP reactor design for NGNP application is that the Core Barrel Conditioning System (CBCS) is not necessary, due to the lowering of the reactor inlet temperature. In the NGNP, the function of the CBCS is fulfilled by rerouting the flow path of the primary coolant, which is at a lower temperature than in the DPP. The change in primary coolant flow path necessitates moving the PHTS cold pipe (reactor inlet) from the bottom part of the RUS (as it is on the DPP reactor) to the top of the Reactor Pressure Vessel (RPV).

Thus, the main focus of design and development for the NHSS is determining the implications of the increased power level on systems that were developed for the PBMR DPP. Increasing the continuous power level also increases the decay heat during shutdown. Systems that are impacted by the increased neutron flux, temperature and power level are:

- Reactor Unit System
  - Core Barrel Assembly
  - Core Structure Ceramics
  - Reactor Pressure Vessel
  - Reactivity Control System
  - Reserve Shutdown System
- Core Conditioning System
- Reactor Cavity Cooling System
- NHSS Cooling System

The increased power level also implies a higher processing rate of fuel, which impacts the following systems:

- Fuel Handling and Storage System
- Helium Services System

The design lifetime for the NGNP NHSS subsystems also has to be assessed with the increased neutron flux, power and temperature levels in mind.

INTRODUCTION

This section of the NGNP Preconceptual Design Report documents the preconceptual design of the NGNP Nuclear Heat Supply System (NHSS), comprising the Reactor Unit System (RUS) and its support systems. It is envisioned that the contents of this section will be further evolved during the conceptual design phase to provide stand-alone System Design Descriptions (SDDs) for the RUS and the support systems.

Within the above framework, major system functions are specified and the resulting requirements are noted and described as appropriate in Section 4.2. Additionally, this section defines and describes the overall configuration and operation of the NHSS, including major subsystems and components. The NHSS configuration is based on the PBMR Demonstration Power Plant (DPP) reactor design, with modifications as required by increasing the reactor power level from 400MWt in the DPP to 500MWt in the NGNP NHSS. The functional interfaces of the NHSS with the other portions of the overall NGNP are noted and discussed at the system level.

Based on all of the above, Design Development Needs (DDNs) are identified in Section 4.3 as input to the Technology Development Plan (Section 16). Future studies addressing identified issues and risks are recommended in Section 4.4.

All the Acronyms used in this section are defined in PCDR Appendix A.

4.1 NUCLEAR HEAT SUPPLY SYSTEM OVERVIEW

The design of the NHSS for the NGNP is based on the PBMR reactor design for the DPP, which ESKOM, the South African utility, to be built near Cape Town in South Africa.

The PBMR DPP reactor uses the high-temperature gas-cooled reactor technology which was originally developed in Germany. This implies the use of spherical fuel elements, referred to as pebbles, which are in size and physical characteristics the same as the fuel which was developed for the German High-Temperature Reactor (HTR) programs. Similar to the German pebble bed reactors, the PBMR DPP also uses an online refueling scheme.

While the PBMR DPP reactor functions as the heat source in a closed, recuperated Brayton power cycle, the NGNP NHSS uses the reactor to supply heat for hydrogen production and for steam generation in a conventional Rankine cycle. In the NGNP, there are two heat transport loops, the Primary Heat Transport System (PHTS) and the Secondary Heat Transport System (SHTS). The PHTS consists of all PHTS ducting, the Primary Circulator for helium coolant and the Intermediate Heat Exchanger (IHX) that transfer heat from the primary (nuclear) to the secondary (non-nuclear) coolant loop. The SHTS also has a helium coolant circulator, ducting and process heat exchangers that transfer heat to the Hydrogen Production System (HPS) and the Power Conversion System (PCS), which is a conventional steam Rankine power cycle.

For application in the NGNP NHSS, the most significant change to the DPP reactor is an uprating of the continuous power level from 400MWt to 500MWt. The reactor inlet/outlet temperatures changed from 500 ºC/900 ºC to 350 ºC/950 ºC, while the reactor mass flow reduced from 193kg/s to 161kg/s. Details have been provided in NGNP special study 20.2 [4-1].

The NHSS, which is described in this section of the PCDR, consists of the following subsystems:

- Reactor Unit System
- Core Conditioning System
- Fuel Handling and Storage System
- Reactor Cavity Cooling System
- Primary Loop Initial Clean-up System
- NHSS Cooling System
- Helium Services System,
- NHSS HVAC System
- NHSS Electrical System
- NHSS Control and Instrumentation System

4.2 SYSTEMS

4.2.1 Reactor Unit System

The Reactor Unit System (RUS) consists of the Core Barrel Assembly (CBA), the Core Structure Ceramics (CSC), the Reactivity Control System (RCS) and the Reserve Shutdown System (RSS), all contained inside the Reactor Pressure Vessel (RPV). The equilibrium core consists of fuel spheres in an annular pebble bed, which is referred to as the Fuel Core in this section. The Reactor Unit System in relation to the PHTS, SHTS, Stem Generator and PCHX is shown in Figure 4.2-1.The fuel spheres are inserted at the top of the core through three fueling lines and are removed from the core at the bottom through three Core Unloading Devices (CUDs). These components are identified in Figure 4.2-2. A schematic horizontal and vertical cross-section through the RUS is shown in Figure 4.2-3 and Figure 4.2-4 respectively.

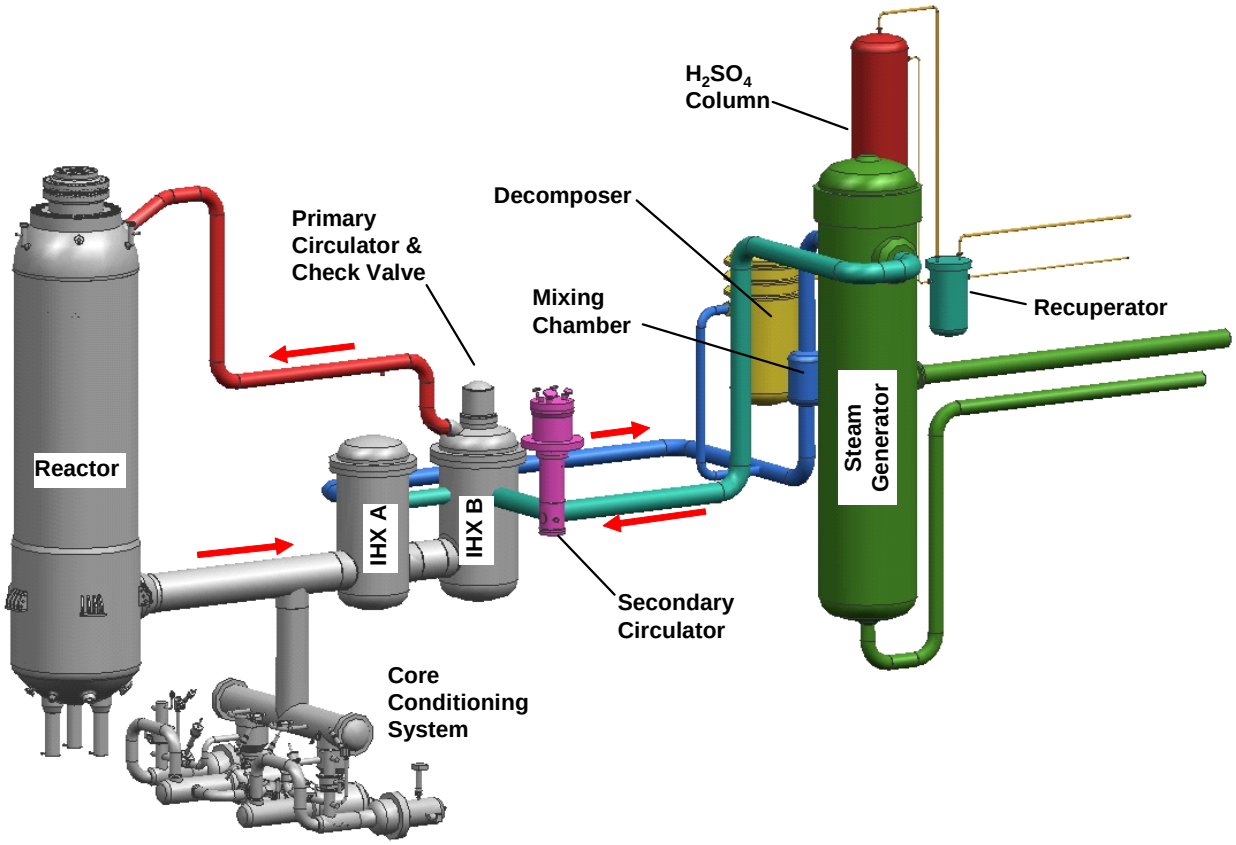

Figure 4.2-1: Layout of the Reactor Unit System in Relation to the PHTS, SHTS, SG and PCHX.

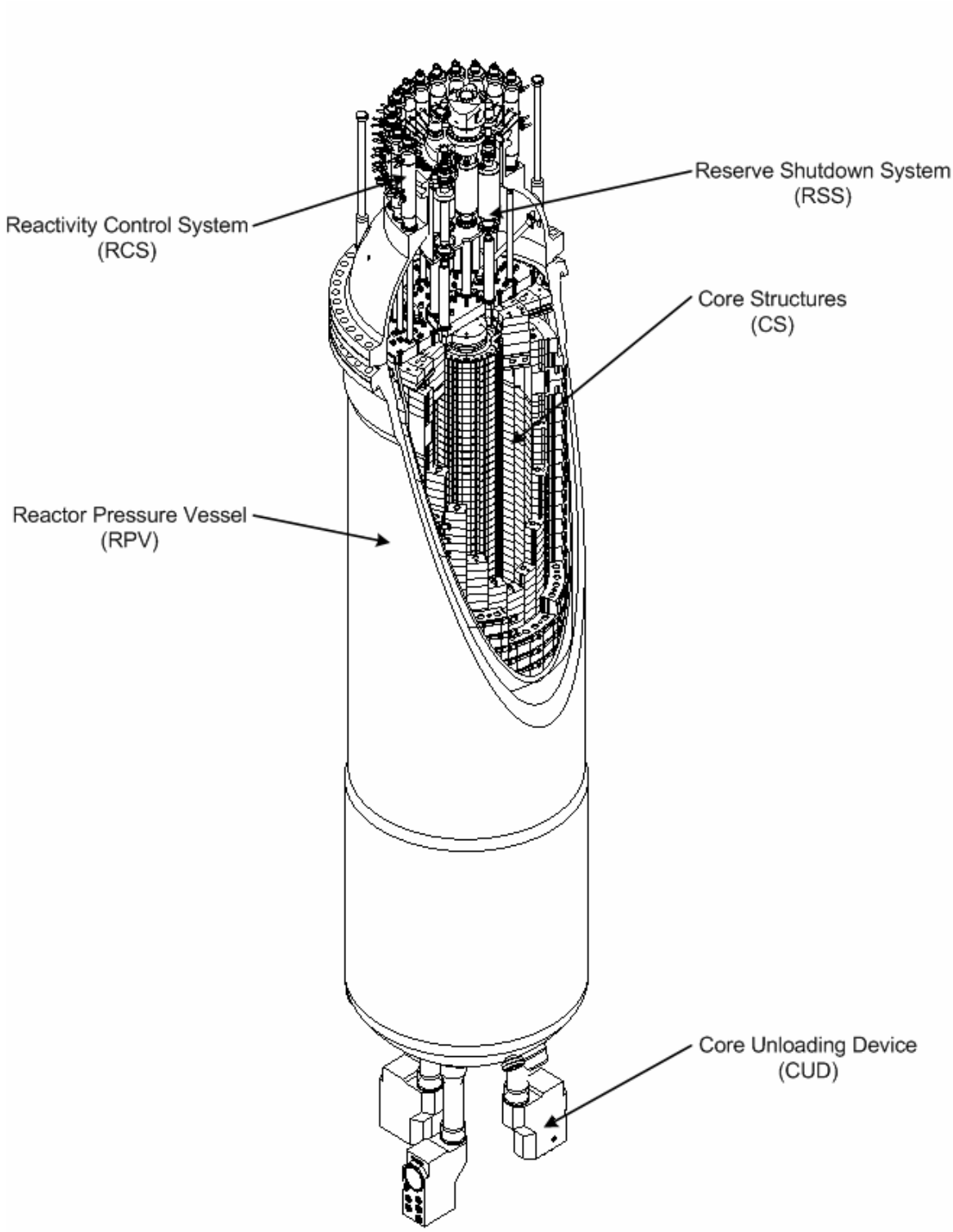

Figure 4.2-2: General Arrangement of the Reactor Unit System Including the Reactor Pressure Vessel

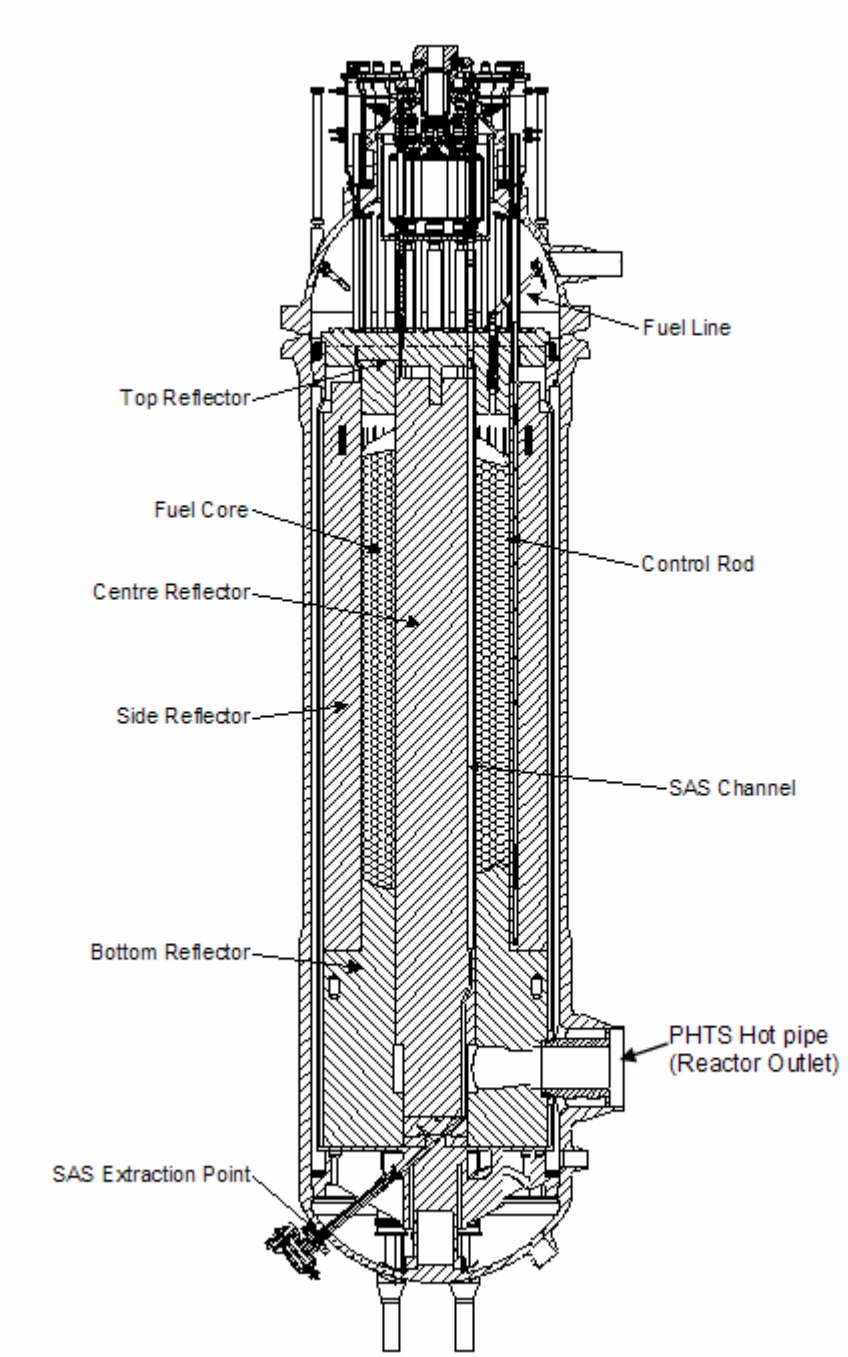

Figure 4.2-3: Vertical Schematic Section Through the Reactor Unit

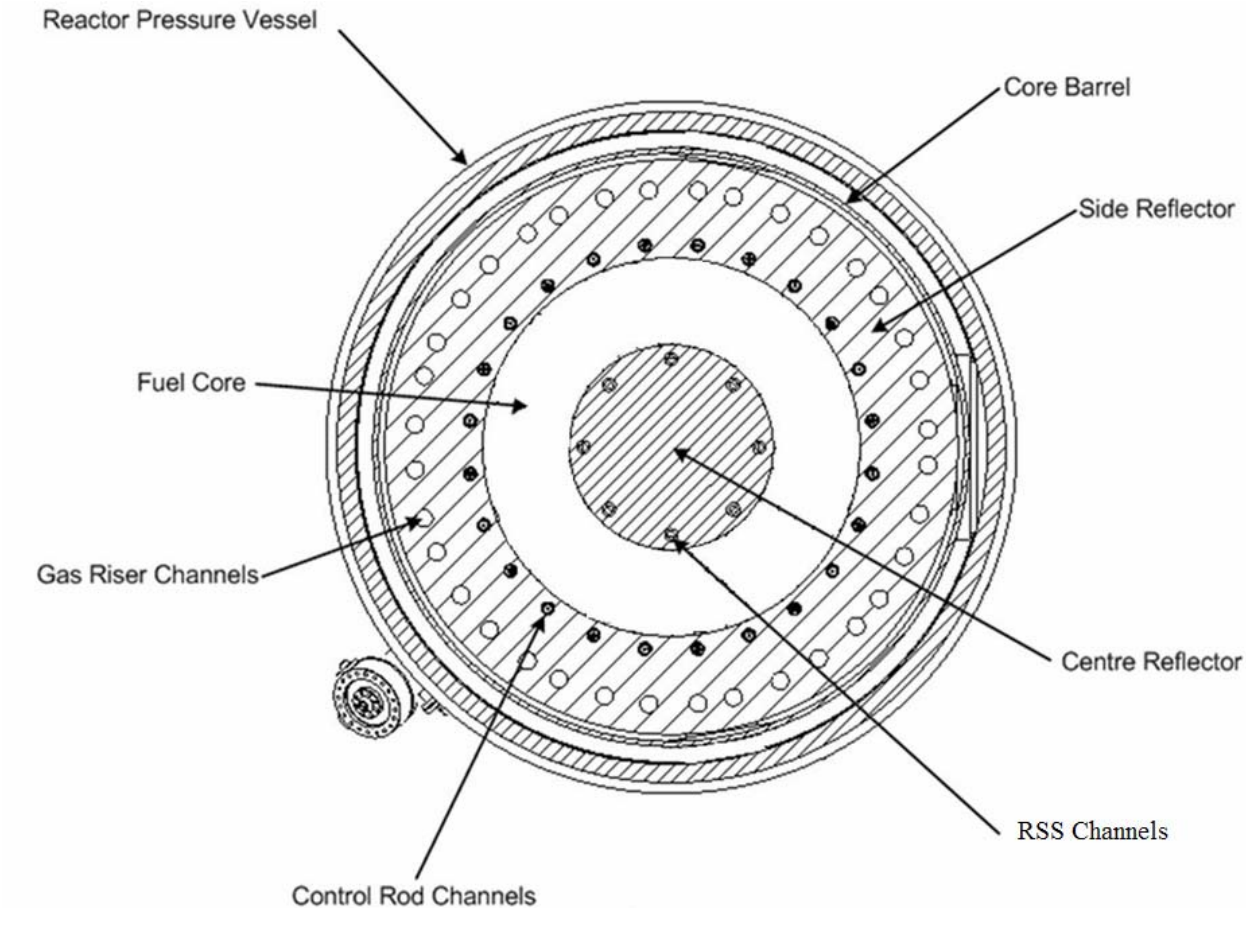

Figure 4.2-4: Horizontal Schematic Section Through the Reactor Unit System Without the Core Inlet and Outlet Pipes

As illustrated in Figure 4.2-5, the inlet helium flow from the PHTS enters the RUS at the top of the RPV. This flow then flows down between the CBA and RPV. This flow is used to operate the RPV at temperatures within the embrittlement data for the RPV material. The flow then enters the riser channels in the CSC through the Bottom Plate. It flows up in the riser channels to the top of the core, then down through the fuel spheres and exits the RUS through the bottom reflector.

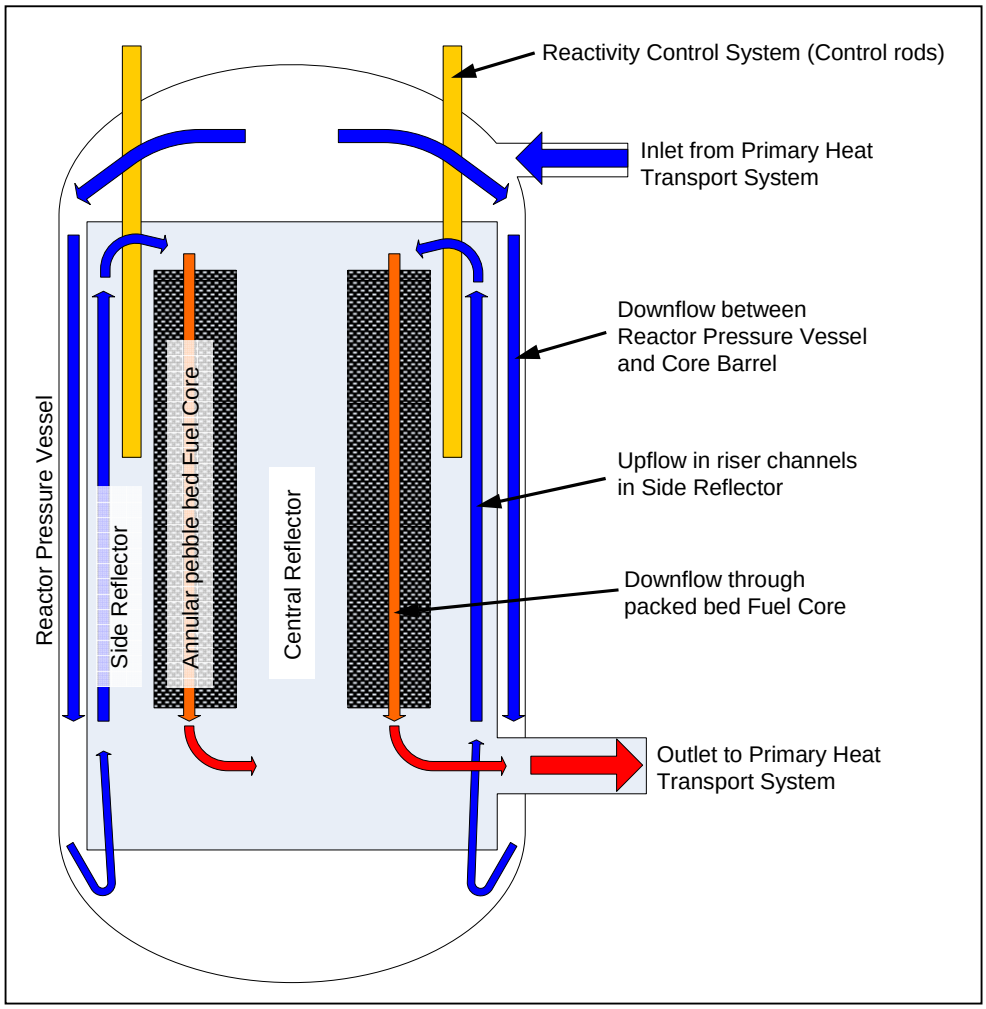

Figure 4.2-5: Helium Flow Path Configuration through the Reactor Unit System

The RUS is designed to have the following thermal performance

- Thermal power rating 500 MW
- Mass flow rate 160 kg/s
- Inlet temperature 350°C
- Outlet temperature 950°C

The operational parameters and design limits are specified so that the fundamental safety functions are ensured at all times and the regulatory release limits are not exceeded. This is achieved by the ability of the fuel to retain fission products within the coated particles. The structural integrity of the Core Structures (CS), together with the nuclear and thermodynamic design, protect the fuel integrity and allow shutdown of the reactor for all normal operating conditions and credible accidents.

4.2.1.1 Fuel Core

The fuel core is formed by the random fuel sphere packing, or pebble bed, within the annular space between the CSC, namely the Side Reflector, Central Reflector and Bottom Reflector.

As the cold bypass flow was assumed to be seven percent [4-1], the following thermal-fluid conditions were used as design input values for the Fuel Core:

- Mass flow 150 kg/s
- Fuel Core inlet temperature 353°C
- Fuel Core outlet temperature 1038°C

The cold bypass flow was assumed to be comprised of 3 percent core barrel annulus leakage of the main inlet flow and 4 percent of the main flow directly leaking from the inlet annulus to the outlet annulus.

The pebble bed Fuel Core fills an annular space that has the following dimensions:

- Fuel Core outer diameter 3.7 m
- Fuel Core inner diameter 2 m
- Average Fuel Core height 11 m
- Fuel Core volume 83.73 m^3

The fuel sphere packing and the fueling scheme has the following properties:

- Average packing fraction 61 %
- Number of fuel spheres in core 451 562
- Fueling scheme Multiple passage (6 times)
- Average residence time in-core 758 days
- Fresh fuel addition rate 595 FS/day (1 batch)

When the reactor core has run to equilibrium conditions, it has a moderation ratio (avg. in core) of 426 carbon atoms per uranium atom (N_C/N_U).

Spent fuel has the following properties:

- Expected average burn-up 94 079 MWd/t_{HM}
- Average fast neutron fluence 2.7E+21 n/cm^2

Other thermal-fluid performance characteristics of the equilibrium Fuel Core are:

- Power peaking (Q_{max}/Q_{ave}) 3.28
- Maximum sphere power 3.63 kW
- Fuel average temperature 840 °C
- Maximum fuel temperature 1168 °C
- Pressure drop over fuel core 158 kPa

- Pressure drop over RUS 213 kPa

Detail of the fuel sphere internal design, fabrication and performance is described in Section 5 of the NGNP Preconceptual Design Report.

4.2.1.2 Core Barrel Assembly

The Core Barrel Assembly (CBA) consists of the structural metallic parts between the RPV and the graphite reflector blocks of the CSC. Its purpose is to support and interface with the graphite core assembly inside the RPV.

4.2.1.2.1 System Functions and Requirements

The functions of this subsystem are to:

Maintain core geometry

- The Core Barrel Assembly (CBA) helps to maintain the nuclear reaction by maintaining the core configuration: The CBA is primarily required to support the weight of the core and the Core Structures Ceramics (CSC) (i.e. the graphite reflector blocks) during normal operation and during postulated events. The CBA also has to maintain the flow passage configuration.

Limit Component Temperature

- The CB is required to act as a thermal shield to keep the RPV at acceptable temperatures.

Maintain Control of Radio nuclides

- Maintain core structure during seismic and other events.

Control radiation exposure from NHSS

- The CB reduces the gamma ray transmission to the RPV.

Enable Maintenance

- The Core Barrel Assembly is required to provide access to the Centre Reflector (CR) during maintenance to replace the CR blocks.

Maintain configuration under accident conditions

- The CBA is required to keep the core and CSC stable during postulated seismic events.
- The CBA is required to bear external loads that the graphite components cannot withstand.

Interface Requirements

- RSS and RCS interfaces: The CBA is required to provide access for the RCS and RSS within the Side Reflector and Central Reflector respectively.
- Fuel Handling and Storage System (FHSS) interface: The CBA is required to provide access at the top for the refueling pipes, as well as the three defueling chutes at the bottom in order to permit circulation of fuel through the core in a uniform flow pattern.

4.2.1.2.2 System Description

The CBA is a welded construction comprising of the Core Barrel (Core Barrel Support Structure and the Core Barrel sides), the Core Barrel top plate assembly, support rings and lateral guides, as depicted in Figure 4.2-6.

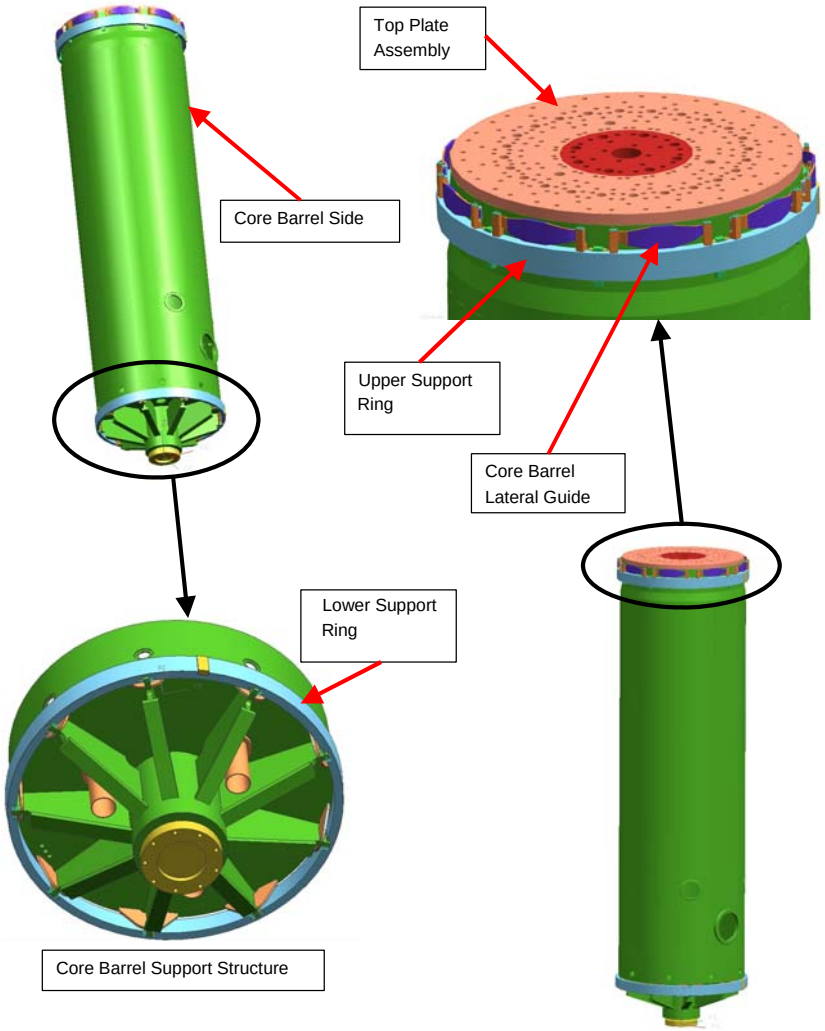

Figure 4.2-6: Core Barrel Assembly Layout

A description of each of the main components is listed below.

- **Core Barrel**

The CB consists of the Core Barrel side and the Core Barrel Support Structure (CBSS) as depicted in Figure 4.2-6. The CBSS supports the CSC at the bottom, while the Core Barrel side forms a thermal shield for the RPV and provides lateral support to the CSC. The material used for the Core Barrel side is Stainless Steel 316H. At the bottom, the CBSS is supported at a single point in the centre of the RPV. Three defueling chutes extending from the bottom of the CBSS, guide the fuel spheres out of the core to the Core Unloading Devices (CUDs) outside the RPV. The Core Unloading Devices are part of the FHSS and are described in Section 4.2.3.

- **Core Barrel Top Plate Assembly**

The Core Barrel Top Plate Assembly is the lid of the Core Barrel. The Top Reflector is suspended from the Top Plate. The Top Plate allows access for the FHSS, RCS and the RSS. The material used is Stainless Steel 316H.

- **Core Barrel Bottom Support**

The Core Barrel Bottom Support structure supports the Core Barrel to the RPV in the vertical direction. It also houses the metallic parts of the defueling chutes. The Core Barrel Bottom Support structure interfaces with the RPV.

- **Lower Support Ring**

The Lower Support Ring supports the Core Barrel horizontally at the bottom, during a seismic event. The Lower Support Ring interfaces with the RPV.

- **Upper Support Ring**

The Upper Support Ring supports the Core Barrel horizontally at the top, during a seismic event. The Upper Support Ring interfaces with the RPV.

- **Core Barrel Lateral Guides**

The Core Barrel Lateral Guides keep the CBA upright during normal operation.

The CBA will fit in a cylinder with a diameter of 6.16 m and a length of approximately 23.3 m. The total mass of the CBA is approximately 350 metric ton. The layout of the CBA is shown in Figure 4.2-6.

4.2.1.2.3 Major System Interfaces

The CBA interfaces with various systems as it provides the inlet and outlet for helium flow to the fuel core. The CBA has the following major system interfaces:

- Reactor Pressure Vessel (RPV): The Core Barrel Vertical Support Assembly supports the CBA vertically, at a single central point, from the lower head of the RPV.
- The Core Structure Ceramics (CSC), i.e. the graphite blocks that are located inside the CBA. The Top Reflector is suspended from the CB top plate while the Bottom Reflector is constructed on top the CB bottom plate.
- Interfaces with the FHSS by means of the defueling chutes.
- The RCS, RSS and FHSS protrusions into the top of the CBA.
- Interfaces with PHTS piping.
- The Core Conditioning System that provides coolant to the core when the reactor is shut down.

4.2.1.2.4 System Operation

The CBA is a static component. During operation the CBA operates with higher pressure cold helium on the outside and hot helium at a slightly lower pressure on the inside. This prevents hot gas from impinging on the RPV in the case of a leak in the CBA. The CBA provides a passive heat transfer path for the removal of heat from the core. Heat is mainly transferred from the CSC through convection and radiation to the inner wall of the CBA, after which the heat is conducted to the outer wall of the CBA and exchanged through radiation and convection to the helium outside the CBA and the RPV.

4.2.1.3 Core Structure Ceramics

4.2.1.3.1 System Functions and Requirements

The functions of this subsystem are to:

Sustain Fission Reaction

- The CSC is required to form and maintain the pebble bed in a mechanically stable configuration.
- The CSC helps to maintain the nuclear reaction by providing neutron reflection for the core.
- The CSC is required to provide access for the In-core Delivery System to the Central Reflector, in order to start the nuclear reaction.
- The CSC is required to maintain flow passage configuration.

Control Radiation Exposure from NHSS

- The CSC protects the metallic components of the CBA and RPV from exposure to high neutron fluence levels.

Limit Component Temperature

- Under normal operation, the CSC is required to protect the metallic components of the Core Structures, including the CBA and RPV from extreme temperatures.
- Under accident conditions, the CSC is required to conduct decay heat from the core to the Core Barrel in order to maintain the maximum fuel temperature at an acceptable level.

Enable Maintenance

- The CSC is required to be assembled in a way that permits replacement of the Central Reflector.

Maintain Configuration Under Accident Conditions

- The CSC is required to bear the mechanical loads due to dead weight, lateral loading due to the pebble bed, seismic loadings and the pressure drops established in the core. These loads must be transferred to the CBA, which transmits the loads to the RPV as described in the previous section.

Interface with Other Components

- RSS and RCS interfaces: The CSC is required to provide access for the RCS and RSS within the Side Reflector and Central Reflector respectively.
- FHSS interface: The CSC is required to provide access at the top for the refueling pipes, as well as the three defueling chutes at the bottom in order to permit circulation of fuel through the core in a uniform flow pattern.

4.2.1.3.2 System Description

The CSC comprises four major components: The Bottom Reflector (BR), Side Reflector (SR), Top Reflector (TR), and the Centre Reflector (CR). The CSC is manufactured from individual graphite blocks. These blocks are arranged and interconnected so that they perform their required functions. The general arrangement and design principles that form the basis for the design of the CSC are based on the German designs for the Thorium High Temperature Reactor (THTR) and later reactors.

Bottom Reflector Structure

The bottom reflector is supported by the thermal expansion compensator. This construction forms the base of the Core Structure by supporting the side and central reflectors as well as the fuel core. The stability and the exact location of the bottom reflector are essential for this requirement.

The defuel chutes are located in the mid-radius of the fuel annulus and equi-spaced circumferentially at a pitch of 120°. Each chute is lined with a 90 mm thick ceramic liner. This separates the movement of the bottom reflector from the expansion of the fuel in the chutes. In order to achieve this, there is a small gap between the defuel chute liner and the defuel chute blocks.

Side Reflector Structure

The side reflector is divided into the inner and outer side reflector. The outer side reflector (OSR) is constructed from nine 40° blocks, which are supported by the 40° bottom reflector outer blocks and form single columns to the top of the reactor.

The inner side reflector (ISR) is constructed from 24 blocks, 15° segments. Four of these blocks are supported by a bottom reflector inner block, which are 60° segments. This configuration also complies with the single column principle, which ensures that relative motion between the columns (due to temperature or irradiation induced dimensional changes) is accommodated without the generation of internal loads. A horizontal section through the side reflector is shown in Figure 4.2-7.

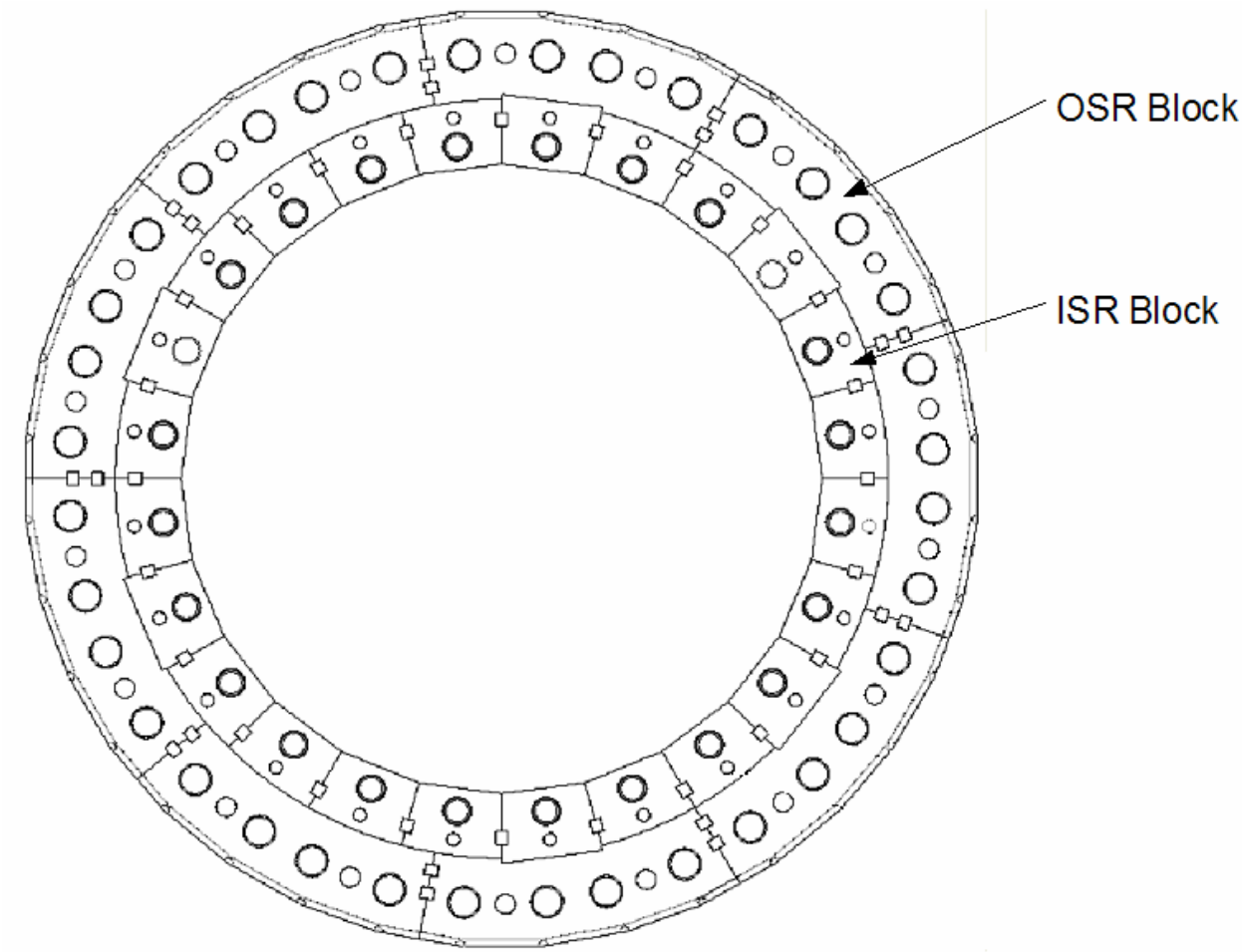

Figure 4.2-7: Horizontal Section of the Side Reflector

Top Reflector Structure

The Top Reflector (TR) is suspended from the Core Barrel top plate by means of tie-rods, manufactured from CFRC (Carbon Fiber Reinforced Carbon). The Top Reflector provides for neutron absorption and shielding above the core and also protects the top plate from high-temperature gas (particularly during accident conditions). The top layer of blocks is manufactured from a solid insulation material. The Top Reflector blocks are also staggered to prevent a direct gap forming from the hot gas in the core to the top plate.

The structural integrity of the Top Reflector ensures that the interfaces, specifically for the RSS and RCS that pass through it, are ensured. The tie rods are designed to prevent the Top Reflector from dropping onto the pebble bed, even during Design Based Accidents. The top plate plug and the reflector suspended from it can be removed to access the core.

Central Reflector Structure

The Central Reflector, which is manufactured from graphite blocks, comprises the Centre Reflector Structural Spine and the Outer Centre Reflector (OCR). The OCR protects the CR

Structural Spine from the high levels of fast neutron irradiation. This ensures that the CS Structural Spine is dimensionally stable. The structural spine ensures the structural integrity of the Central Reflector. A section through the Central Reflector is shown in Figure 4.2-8.

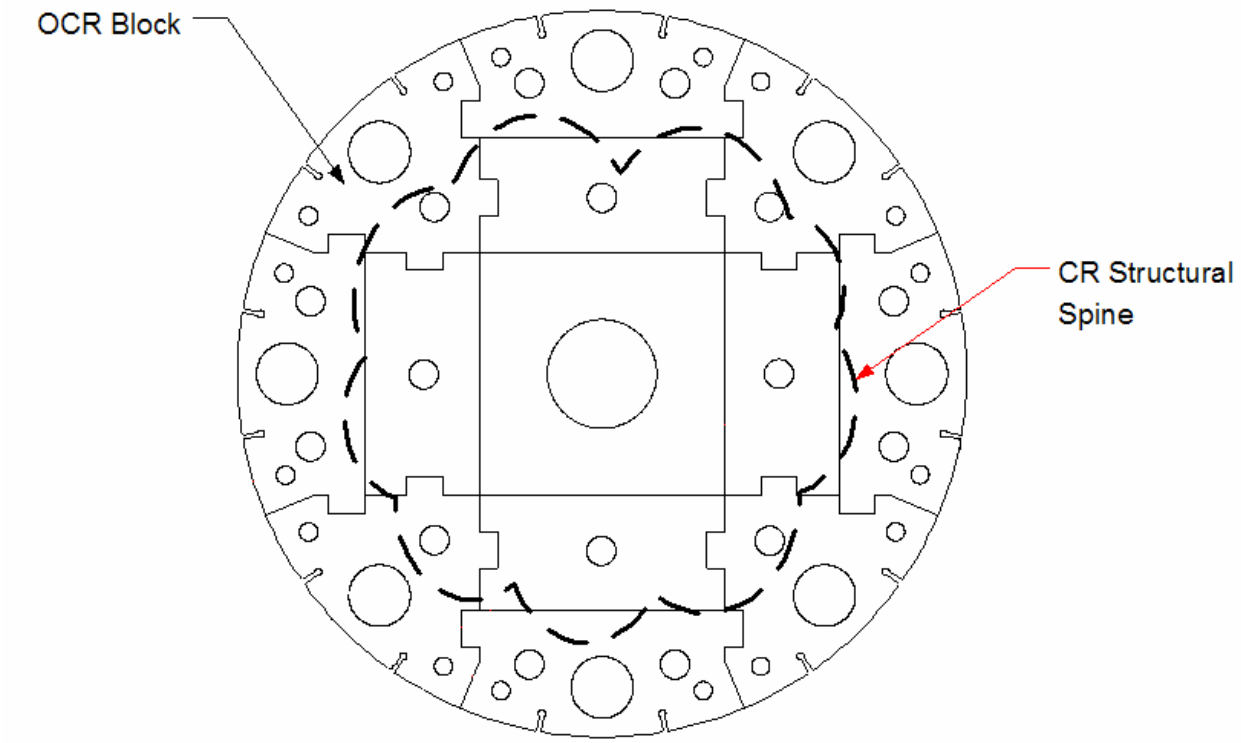

Figure 4.2-8: Section Through the Central Reflector.

4.2.1.3.3 Major System Interfaces

The major interfaces of the CSC are listed below:

- The CBA - the Top Reflector is suspended from the Core Barrel top plate while the Bottom Reflector is constructed on top the Core Barrel bottom plate.
- The RSS - the RSS interfaces with the Top Reflector, the Central Reflector and the Bottom Reflector so that the Small Absorber Spheres can be inserted at the top and extracted at the bottom.
- The RCS - the Top Reflector, Side Reflector and Central Reflector is configured so that the RCS control rods can be inserted into the core for control.
- The FHSS Defueling Chutes and refueling pipes
- The PHTS Piping

4.2.1.3.4 System Operation

For reactor startup, the CSC provides access for the In-Core Delivery System in a Multi-purpose Channel in the Central Reflector.

The helium flow is introduced into the Bottom Reflector of the Core Structure Ceramics, from where it is channeled to the top of the pebble bed in the gas riser channels, located in the Side Reflector. The gas then flows through the pebble bed from top to bottom, being heated in the process. At the bottom of the pebble bed, the gas is collected in the outlet plenum through flow slots between the blocks. The flow is then channeled from the outlet plenum into the core outlet pipe and out of the reactor unit system.

4.2.1.4 Reactor Pressure Vessel

4.2.1.4.1 System Functions and Requirements

The functions of this subsystem are to:

Sustain Fission Reaction
- Provision of structural support and alignment for the RUS components.

Limit Component Temperature
- Transfer of the decay heat from the fuel core via the RPV to the Reactor Cavity Cooling System (RCCS) during loss of forced cooling events (ensure adequate core heat removal).

Maintain Control of Radionuclides
- Acting as a barrier to the release of circulating fission products to the environment.

Control Radiation Exposure from NHSS
- The RPV reduces the gamma ray transmission to the Reactor Cavity.

Maintain Coolant Helium
- Containment of the helium coolant inventory at operating pressure.

Enable Maintenance
- Provision of access for replacement of the Central Reflector blocks.

Maintain Configuration Under Accident Conditions
- Maintenance of the geometry of the fuel core within acceptable geometrical limits under all normal and abnormal events.

Interface with Other Components

- Provision of structural support and alignment for all interfacing systems, listed in a following paragraph:

The RPV is required to withstand all the normal operating conditions over the lifetime of the reactor and all the abnormal conditions for the specified number of occurrences, without any degradation of its ability to perform its nuclear and non-nuclear functions. The RPV shall be designed for a nominal working pressure of 9.0 MPa, and a design pressure of 9.7 MPa.

The RPV shall be designed and constructed to ASME III, Division I, Subsection NB and Code Case N-499-2.

4.2.1.4.2 System Description

The RPV contains the RUS components and parts of the FHSS. The RPV is manufactured from carbon steel SA 533 Type B Class 1 for plates, SA 508 Type 3 Class 1 for forgings and SA 540 Grade B24 Class 3 for bolts.

The RPV consists of a main cylindrical section with hemispherical upper and lower heads. The upper head is bolted to the cylindrical section and incorporates penetrations for the mechanisms of the FHSS, RCS, RSS and for instrumentation. An opening is provided in the centre of the upper head to allow access to the Core Structures for reflector replacement. The RPV has a maximum external diameter of approximately 6.8 m and its total length is approximately 30 m.

The lower head is welded to the main cylindrical section, and will have openings for fuel discharge, the RSS absorption spheres discharge and an access opening intended for use only during initial installation operations. The nozzle forgings of the Core Outlet Pipe and the vessel supports are attached to the lower reinforced part of the cylindrical section. This part is reinforced to withstand reactor vessel support loads. The RPV supports provide vertical as well as bottom horizontal support.

Localized shielding may be attached to structures inside the RPV top part to reduce activation of the RPV head. Additional reinforcement is provided at the level of the upper attachment points for the upper seismic restraints. The nozzle forgings of the Core Inlet Pipe are attached to the top part of the RPV.

4.2.1.4.3 Major System Interfaces

The RPV interfaces primarily with the following components:

- The CBA is housed in the RPV.
- The RSS has connections at the top and bottom of the RPV to insert and remove RSS spheres from the CSC.
- The RCS drive motor housings are located on the RPV upper head.
- The FHSS connects to the upper heat of the RPV at three places to load fuel spheres into the core. It also connects to the lower head of the RPV to unload spheres from the defuelling chutes.
- Interfaces with PHTS piping.
- The RCCS. The RPV is not in direct contact with the RCCS, but is surrounded by the RCCS, so that it exchanges heat with the RCCS by means of radiation heat transfer.
- The Nuclear Heat Supply Building (NHSB). The RPV transfers the weight of the fuel core, the CSC, the CBA and its own weight to the NHSB. It must do so under normal operation as well as under accident conditions.
- The CCS couples to the RPV to circulate flow through the core in order to remove decay heat.

4.2.1.4.4 System Operation

The RPV will be subjected to 9.0 MPa during normal operation. The reactor inlet helium flow will be controlled to ensure that the RPV temperature is within the embrittlement data for the RPV material.

4.2.1.5 Reactivity Control System

The Reactivity Control System (RCS) is used to control the reactivity in the fuel core, to quickly shut the reactor down and to keep it in a shutdown mode.

4.2.1.5.1 System Functions and Requirements

The functions of this subsystem are to:

Control Fission Reaction

- The RCS is required to regulate the neutron absorption from the reactor as a method of reactivity control.

Maintain Reactor Unit System Shutdown

- The RCS is required to shut the RUS down (i.e. insert the control rods) in the event of a plant electricity failure.

Enable Maintenance

- Maintenance to the RCS is required to be done in such a way that air ingress is minimized.

Maintain configuration under accident conditions

- The RCS control rods are required not to break in the event of a chain failure.
- In the event of a chain failure, the RCS control rods are required no to damage the CSC.

4.2.1.5.2 System Description

The RCS consists of 24 identical control rods. The control rods are grouped into 12 control rods and another group of 12 shutdown rods. The control system moves each group alternatively to have the rods inserted to an equal depth into the side reflector. The only difference between shutdown rods and normal operation control rods is the length of the chain, with the control rods only traveling in the top part of the reflector, and the shutdown rods capable of traveling in the bottom part of the reflector. Each rod consists of six segments containing absorber material in the form of sintered B_4C rings between two coaxial cladding tubes. Gaps between the cladding tubes and B_4C rings prevent constraint forces from arising due to radiation-induced swelling of the B_4C. Pressure equalizing openings expose the B_4C to the coolant gas to avoid any pressure build-up.

The RCS consists of the following major subsystems/components:

- RCS Control Rod Drive Mechanism (CRDM) consisting of the chain drive, chain container and scram shock absorber which functions as the primary shock absorber. The purpose of the CRDM is to translate rotational movement into linear movement. Refer to the layout in Figure 4.2-9.
- Rod and chain, with the rods absorbing neutrons and the chain connects the chain drive to the control rod.
- RCS secondary shock absorber, which prevent damage to the control rod and the core structures ceramics following a chain failure.
- RCS drive motor, which keep the control rod in position and move the control rod up and down. During a power failure the control rod will fall down the control rod channel under gravitational force.
- RCS control rod guide tubes connect the CRDM housing to the Core Structure and serve as a guide for the Control Rod.

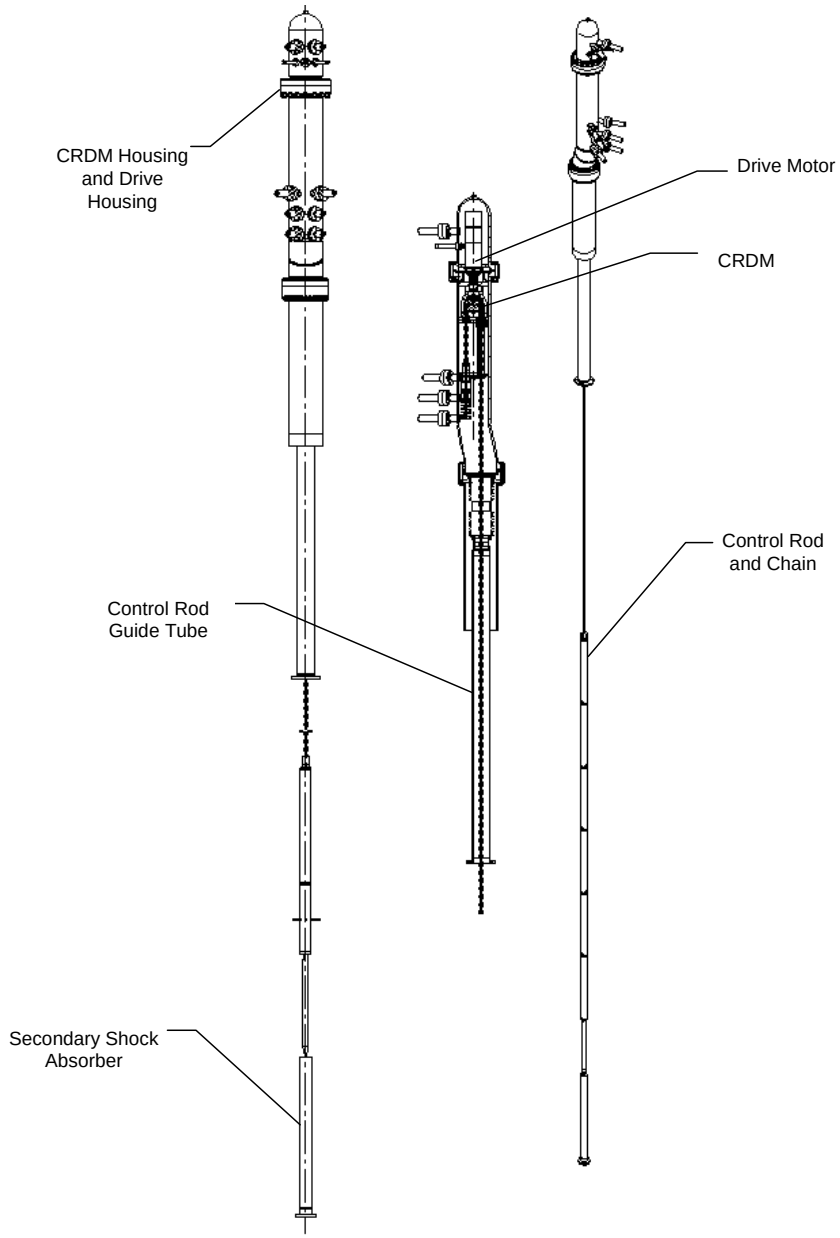

Figure 4.2-9: Reactivity Control System Layout

4.2.1.5.3 Major System Interfaces

The RCS interfaces with the following systems:

- The Reactor Pressure Vessel: The RCS drive motor housings are located on the RPV upper head.
- The Core Barrel Assembly: The Core Barrel Assembly provides holes in its top for the RCS chains to pass into the CSC.

- The Core Structure Ceramics houses the control rod channel in which the control rods move.

4.2.1.5.4 System Operation

During the anticipated operating modes of the Reactor Unit System, the RCS is required to raise and lower the control rods and hold them steady in any position over their entire range of travel. The control rod and shutdown rod positioning is commanded by the Operational Control System (OCS). Control- or shutdown rod insertion (scram) action is initiated by the Reactor Protection System (RPS), which overrides the OCS.

During full power operation, both banks of control rods (24) are inserted into the upper third of the core. During hot shutdown both banks are moved simultaneously down to the middle third of the reactor. Cold shutdown will be achieved if bank 1 remains in position, while bank 2 continues to the fully inserted position. Details of possible variations will be calculated during the conceptual design phase

When power is cut to the drive motors (scram activation), the rods are inserted by gravity. During this event, the drop velocity of the RCS units is limited to a pre-determined value.

4.2.1.6 Reserve Shutdown System

The purpose of the Reserve Shutdown System (RSS) is to maintain the reactor in a subcritical state during shutdown.

4.2.1.6.1 System Functions and Requirements

The functions of this subsystem are to:

Maintain Reactor Unit System Shutdown

To achieve reactor shutdown, the RSS mechanical functions are the following:

- To load, store and insert small absorber spheres.
- To remove the small absorber spheres from the central reflector and to transport them back to the feeder bin from where they are distributed to the eight storage containers of the RSS.

Enable Maintenance

- Maintenance to the RSS is required to be done in such a way that air ingress is minimized.

The handling and transportation of the small absorber spheres back to the eight storage units is done at gas temperatures that will not cause damage to the valves in the valve block, or to other components that might be sensitive to high-temperature gas.

4.2.1.6.2 System Description

The RSS consists of eight units that can insert Small Absorber Spheres into the eight borings of the central reflector. Small Absorber Spheres are typically inserted to shut the reactor down to 'cold' conditions for maintenance operations. When inserted, the RSS keeps the reactor subcritical to an average core temperature of 100ºC or less.

The RSS neutronic function is thus to act as an absorber in the lower part of the reactor that is out of reach of the solid control rods. The presence of the small absorber spheres creates a negative reactivity which ensures subcriticality. Figure 4.2-10 provides a schematic diagram of the RSS.

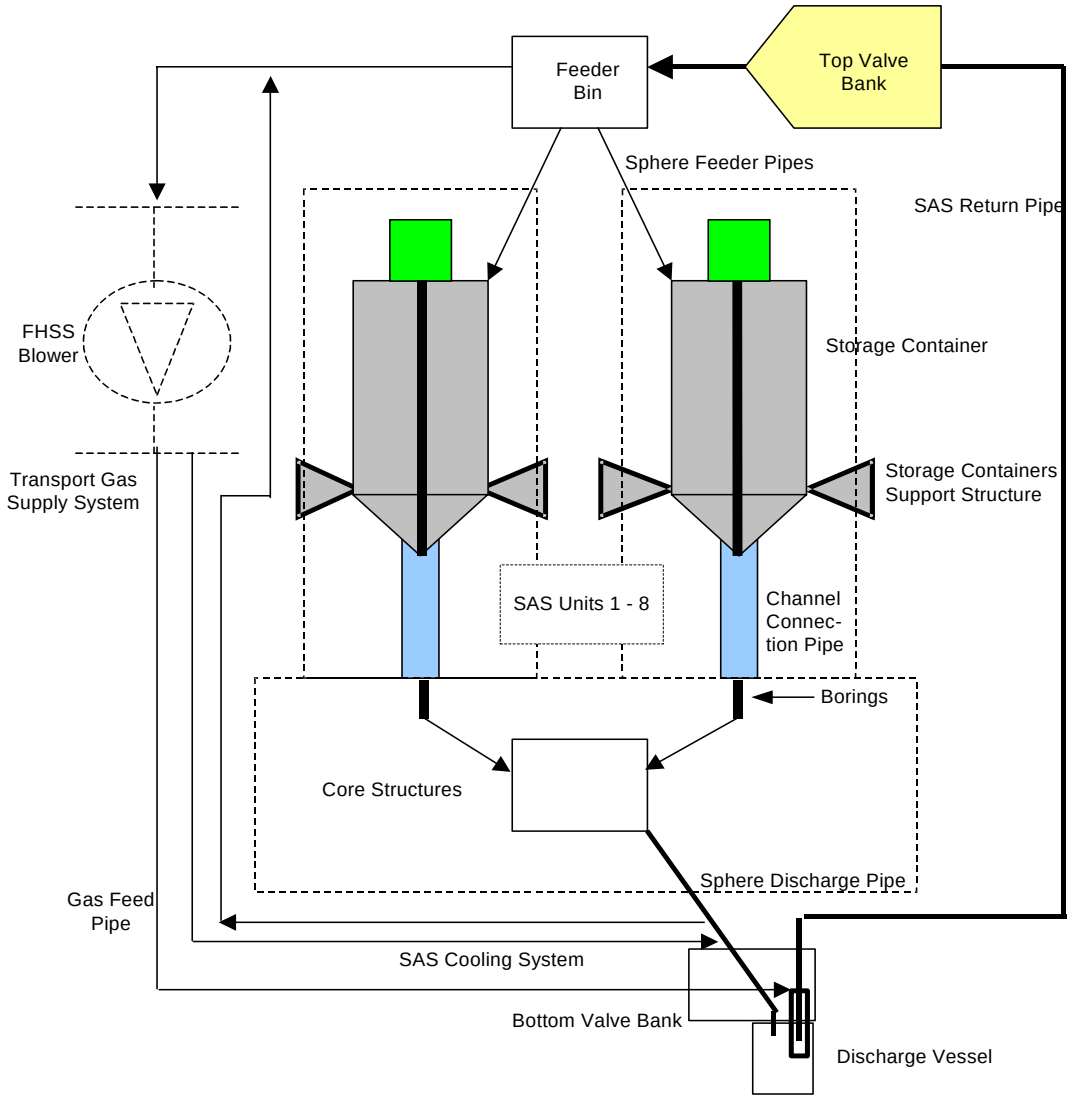

Figure 4.2-10: Reserve Shutdown System Schematic Layout

Small Absorber Spheres Absorb Neutrons: The spheres, made of Boron Carbide impregnated graphite with a diameter of 10 mm, are released into the small absorber spheres borings by actuation of a valve mechanism in the storage containers. The small absorber spheres contain natural B_4C. The ^{10}B in the natural B_4C is the neutron absorber. It will have to be determined if it is necessary to enrich the ^{10}B for the increased power level of the NHSS.

Storage Container: The storage container stores the small absorber spheres and allows the release of the spheres into the borings in the central reflector of the reactor.

Storage Container Connection Pipe: The storage container connection pipe directs the small absorber spheres from the storage container to the borings in the central reflector. It can also compensate for relative movement due to thermal expansion between the core structures and installation point of the storage containers.

Storage Container Support Structure: The storage container support structure houses and supports the eight storage containers. The RPV in turn supports the storage container support structure.

Sphere Discharge Pipe: The sphere discharge pipe conveys (gravity feed) the small absorber spheres from the borings in the central reflector to the bottom valve bank. The sphere discharge pipe provides for cooling of the small absorber spheres by gas from the FHSS blower during the transport of hot small absorber spheres.

Bottom Valve Bank: The bottom valve bank directs the spheres from the sphere discharge pipe to the discharge vessel. It is further used to direct the conveying gas to the discharge vessel of the small absorber spheres (during transport of the small absorber spheres) or to bypass the discharge vessel transport point of the small absorber spheres (during conditioning of the transport line before transport of the spheres). The bottom valve bank houses the isolation valves that are used to isolate the reactor from the small absorber spheres return- and the gas transport pipes when required.

Discharge Vessel: The small absorber spheres are fluidized in the discharge vessel in a controlled manner to allow transport of the small absorber spheres to the storage container feeder bin.

Small Absorber Spheres Return Pipe: The small absorber spheres return pipe conveys the small absorber spheres from the discharge vessel to the feeder bin.

Top Valve Bank: The top valve bank houses the small absorber spheres isolation valves and the gas return valves. It directs the small absorber spheres to the storage container feeder bin and the return gas to the blower gas return pipe. It isolates the reactor from the sphere return pipe and the blower gas return pipe when required.

Feeder Bin: The feeder bin receives small absorber spheres and directs the spheres to the various storage containers during small absorber spheres transport.

Transport Gas Supply System: The transport gas feed pipe supplies the transport gas from the FHSS blower outlet manifold to the bottom valve bank. It will further return the transport gas to the FHSS blower inlet manifold.

4.2.1.6.3 Major System Interfaces

The RSS interfaces with the following systems:

- The Reactor Pressure Vessel: The RSS has connections at the top and bottom of the RPV to insert and remove RSS spheres from the CSC.
- The Core Barrel Assembly: The CBA provides holes in its top and bottom for the RSS spheres to pass into and from the CSC.
- The Core Structure Ceramics houses the RSS channels in the central reflector.
- The FHSS blower supplies the flow for conveying the RSS spheres to the top feeder bin.

4.2.1.6.4 System Operation

When shutdown is required, the valves of the small absorber spheres storage units are opened to allow the small absorber spheres to flow under gravity into the central reflector borings. The small absorber spheres are removed from the channels (all eight channels are removed at the same time) and transported back via the sphere return pipe to the feeder bin by means of a gas transport system. The feeder bin distributes the small absorber spheres to the eight small absorber spheres storage containers. Gas flow from the FHSS blower fluidizes and moves the small absorber spheres. During small absorber spheres transport, the FHSS does not transport fuel. The FHSS is isolated from the reactor and the RSS switches to small absorber spheres transport mode.

The small absorber spheres units, interfacing with the RPV and CB, operate under the same pressure and temperature as the reactor, and therefore small absorber spheres can only be transported at gas temperatures amenable to the valves and other components wetted by gas flow.

4.2.1.7 In Core Delivery System

4.2.1.7.1 System Functions and Requirements

The functions of this subsystem are to:

Start Fission Reaction

- To start the neutron multiplication in the core, a removable isotopic neutron source is inserted into one of the instrumentation channels until sufficient fission product neutrons are available to provide a statistically reliable neutron background for start-up.

Enable Maintenance

- Maintenance to the In Core Delivery system (ICD) is required to be done in such a way that air ingress is minimized.

4.2.1.7.2 System Description

The neutron source system is isotopic in nature and shall be made from a neutron emitting material such as Californium. The strength of this source will be determined in the conceptual design phase. Due to the neutron emitting nature of the neutron source, it shall be kept in a specially designed parking cask when not in use. The main function of the cask is to protect personnel in the vicinity from the high levels of neutron flux which are emitted by the neutron source.

The In Core Drive Mechanism (ICDM) comprises a drive motor, a winding drum assembly and possibly a gearbox assembly through which the motor rotates the winding drum assembly. The ICDM assembly should be skid mounted as it may be required to horizontally translate the ICDM assembly in order to make room available for bagging techniques to limit the escape of radioactive particles during ICD Neutron Source removal.

The function of the ICDM is to feed and retract the neutron source and associated telemetry/instrumentation cables into and out of the reactor by means of a cable.

4.2.1.7.3 Major System Interfaces

The ICD system interfaces with the following components:

- The Core Structure Ceramics provides the channel in which the ICD system is lowered into the core.
- The Core Barrel has a hole for inserting the ICD system into the CSC.
- The Reactor Pressure Vessel has a penetration for inserting the ICD system through the CBA and into the CSC.

4.2.1.7.4 System Operation

The neutron source is lowered in the instrumentation channel to a level as close as possible to the center of the fissile material concentration in the fuel. When sufficient fission product neutrons are detected and the reactor has been started up, the neutron source is pulled up out of the core.

4.2.2 Core Conditioning System

4.2.2.1 System Functions and Requirements

The functional requirements of the Core Conditioning System (CCS) are the removal of decay heat from the reactor when the PHTS blower is not functional or during maintenance conditions. The function of the CCS is therefore to control the RUS temperature for economical purposes (investment protection) and for safety reasons (reducing the need for passive safety features).

The functions of this subsystem are to:

Limit Component Temperature

- The CCS is required to bring the reactor down to maintenance conditions within 36 h after a PHTS blower trip or failure.
- The CCS is required to keep the reactor at maintenance conditions, with the maximum fuel temperature below 350°C.
- The maximum helium flow velocity within the CCS inlet pipe from the core outlet pipe shall not exceed 60 m/s.
- The CCS must be able to withstand a maximum inlet temperature of 1000°C for two hours.
- The maximum rate of temperature change that the CCS shall return the helium to the core structures is 100°C /h.
- The CCS must be able to remove heat at the whole range of pressures envisaged for the Reactor Unit System, i.e. for pressurized and depressurized forced cooling.

Enable Maintenance

- During maintenance, the CCS is required to provide cooling flow to the reactor defuelling chutes in order to cool the fuel spheres entering the CUD.

Start Reactor Unit System

- During the commissioning of the Reactor Unit System, the CCS is required to circulate heated nitrogen for the Primary Loop Initial Clean-up System (PLICS).

4.2.2.2 System Description

The CCS consists of two 100% systems that transfer the heat collected in the RUS to the CCS water cooling circuits. The requirement on the number of systems will be evaluated in the conceptual design. Each of the redundant CCS systems consists of a blower, heat exchanger, associated piping, valves, controls and instrumentation. The CCS is a closed loop cooling system that circulates helium through the core. The heated helium is extracted from the Core Outlet Pipe (COP) and routed to the heat exchanger connected to the CCS buffer cooling water

circuit. The cooled helium is then returned to the core via the annulus around the Core Outlet Pipe (COP).

Each CCS system is equipped with its own blower surge control bypass piping and valves. A flow diagram for the CCS is provided in Figure 4.2-11.

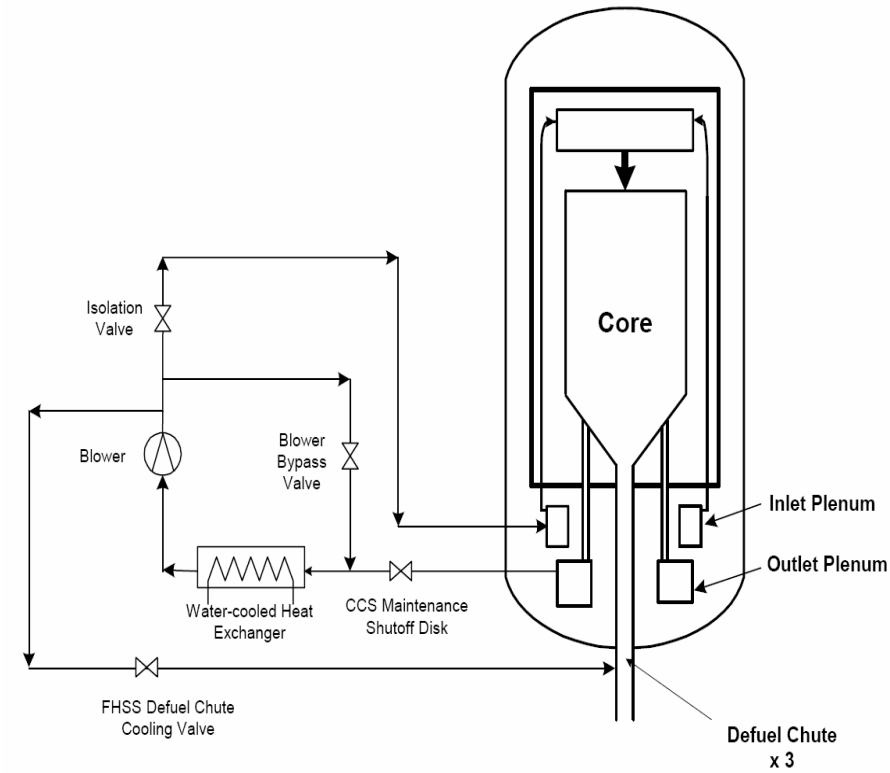

Figure 4.2-11: Simplified Core Conditioning System Schematic (2 x 100% System)

4.2.2.3 Major Components

The following is a summary description of the major components.

Blowers

- The blowers for the CCS are variable speed centrifugal with electromagnetic-type bearings in a horizontal configuration. Each CCS system has its own blower.

Valves

- Isolation valves are electrically actuated, butterfly type.
- Control valves are selected depending on their function and the degree of control required.

- Motor operated isolation valves downstream of each CCS system are used to isolate the system while a Maintenance Shut-off Disc (MSD) is used on the hot inlet side. During normal operation, the isolation valves of the active system are open, while those of the redundant system are closed. The MSDs are only used during CCS open maintenance, and are not for isolation proposes during plant maintenance.
- The surge blower control valves are used to control the bypass flow, and therefore, the cooling mass flow rate.

Heat Exchangers

- The heat exchangers of the CCS are of the standard U-tube shell.

4.2.2.4 Major System Interfaces

The core conditioning system has the following major system interfaces:

- The CCS interfaces with the reactor unit system during maintenance and reactor start-up (if the Primary Circulator is not used).
- The CCS has an interface with the Helium Services System for providing filtered helium to the submerged blowers.
- The CCS heat exchanger will be supplied of water by the Component Cooling Water System (CCWS).
- The CCS has a connection to the FHSS Defuel Chute Cooling Valve.
- The PLICS Electric Heater (PEH) is temporarily connected to the CCS via a pipe network during the PLICS drying stage of the reactor (Section 4.2.4). The CCS blower is used to create the necessary flow through the reactor. After the PLICS drying function, the PEH is disconnected from the CCS by removal of connections and stored for future drying activities of the reactor internals.

4.2.2.5 System Operation

The operation of the CCS is as follows:

Hot reactor outlet gas is extracted from the core outlet pipe and transported to the inlet of the CCS water heat exchanger. Heat is extracted from the system through the use of the CCS water cooler. Cooled helium leaving the CCS heat exchanger is then directed back to the core inlet pipe via the CCS blower. The blower controls the required mass flow rate through the system. Figure 4.2-11 is a simplified process flow diagram depicting the CCS.

When the CCS is used during PHTS commissioning, an electric heater which is part of the PLICS is attached to the CCS. Flow is directed through the PEH on its way back to the core inlet plenum in order to heat the core and graphite structures.

It is necessary to cool fuel spheres before they enter the FHSS CUD. During normal operation, this cooling flow is provided through a line connecting the PHTS to the reactor defuel chute. During maintenance conditions or when the PHTS is not available, the CCS shall direct a small portion of flow to this connection point on the core defuelling chutes.

4.2.3 Fuel Handling and Storage System

4.2.3.1 System Functions and Requirements

The functions of the Fuel Handling and Storage System (FHSS) are to:

Sustain Fission Reaction

- Store of fresh fuel elements
- Circulate fuel elements
- Monitor and classify fuel elements
- Initial loading of the fuel core with graphite spheres
- Replacing the graphite spheres with fresh fuel spheres intermixed with graphite spheres during initial start-up
- Gradually changing the start-up core composition of graphite and fuel to a fuel only composition, and then to a core consisting of fuel to be used in the equilibrium state
- Loading and unloading the fuel into and from the reactor core while the reactor is operating at power
- Loading of fresh fuel to compensate for spent fuel discharges
- Store of spent fuel elements

Maintain Site Proliferation Resistance

- Monitor and record all fuel transport

Enable Maintenance

- Maintenance to the FHSS is required to be done in such a way that air ingress is minimized.
- The FHSS enables replacement of the Central Reflector and Side Reflector (part of the Core Structures Ceramics) by removing the fuel spheres from the reactor and placing them in temporary storage.

4.2.3.2 System Description

The fuel spheres are circulated by means of a combination of gravitational flow and pneumatic conveying processes using helium at RUS operating pressure, as the transporting gas. The design of the FHSS is based partly on that of the THTR 300, which used an on-line fuelling scheme with a multipass capability. Fuel spheres circulate through the core several times before reaching their maximum burn-up, upon which they are discharged to the spent fuel storage tanks.

The major subsystems of the FHSS are:

- Core Loading Subsystem (CLS)
- Sphere Storage Subsystem (SSS)
- Sphere Circulation Subsystem (SCS)

- Sphere Replenishment Subsystem (SRS)
- Fuel Handling Control Subsystem (FCS)
- Circulating Gas Subsystems (GCS)
- Sphere Decommissioning Subsystem (SDS)
- Auxiliary Gas Subsystem (AGS)
- High-level Waste Handling Subsystem (HLWHS)

The destination of a sphere at any stage of the plant operation is dependent on the mode of operation, the type of sphere (fuel/graphite) and the burn-up achieved in the case of a fuel sphere. All the possible destinations for fuel/graphite spheres are as follows:

- Used fuel storage tank (Irradiated fuel spheres that have not achieved burn-up requirements)
- Graphite storage tank (graphite spheres)
- Spent fuel storage tanks (spent fuel spheres)
- Fuel core (fresh/used fuel spheres and graphite spheres during the start-up phase)
- Sphere sampling block (spheres identified for removal from the system)
- Damaged sphere container (damaged fuel/graphite spheres or sphere fragments)

4.2.3.3 Major System Interfaces

The FHSS will interface with the following systems:

- Primary Heat Transport System: The FHSS is connected to the PHTS in order to share helium conditioning.
- The Reactor Pressure Vessel: The FHSS connects to the upper head of the RPV at three places to load fuel spheres into the core. It also connects to the lower head of the RPV to unload spheres from the defuel chutes.
- Interface with Core Structure Ceramics and Core Barrel Assembly.
- Core Conditioning System: Providing cooling for defuelling chutes when HTS is not available.

4.2.3.4 System Operation

The FHSS operating modes are as follows:

Core loading during commissioning and start-up

- The subsystem used during commissioning is the Core Loading Subsystem (CLS). Commissioning is performed with graphite spheres. The CLS must prevent that the graphite spheres are dropped through unacceptable heights. Commissioning takes place with the reactor pressure vessel open to atmospheric pressure.
- The CLS makes provision for the loading and circulation of the start-up core with different ratios of fuel spheres to graphite spheres, for fuel spheres with different

enrichment levels (start-up enrichment), and for a specific loading sequence of these spheres.

- The simplified process flow diagram of the Initial Loading of Graphite Spheres into Core is shown in Figure 4.2-12 and the simplified process flow diagram of the Start-up Core Circulation is shown in Figure 4.2-13.

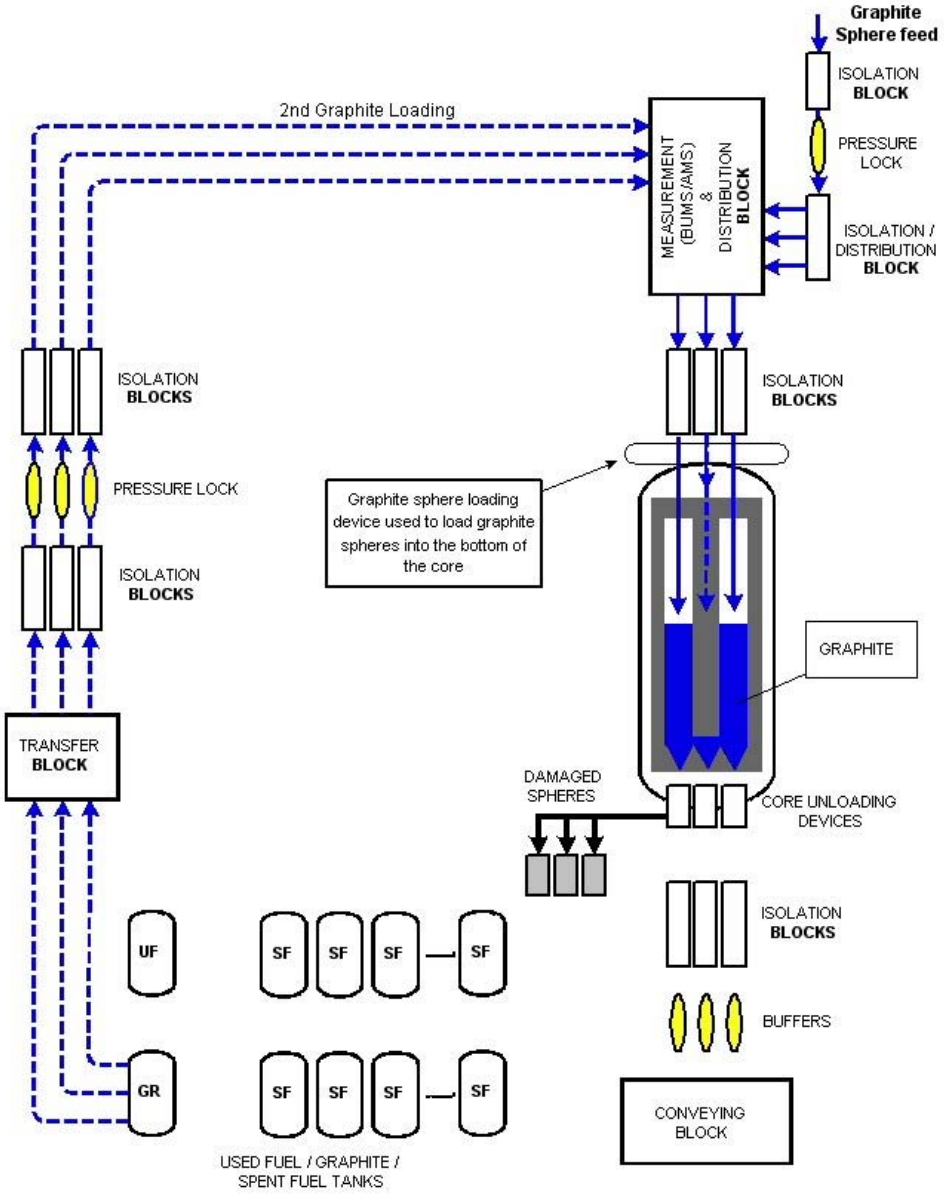

Figure 4.2-12: Initial Loading of Graphite Spheres into Core

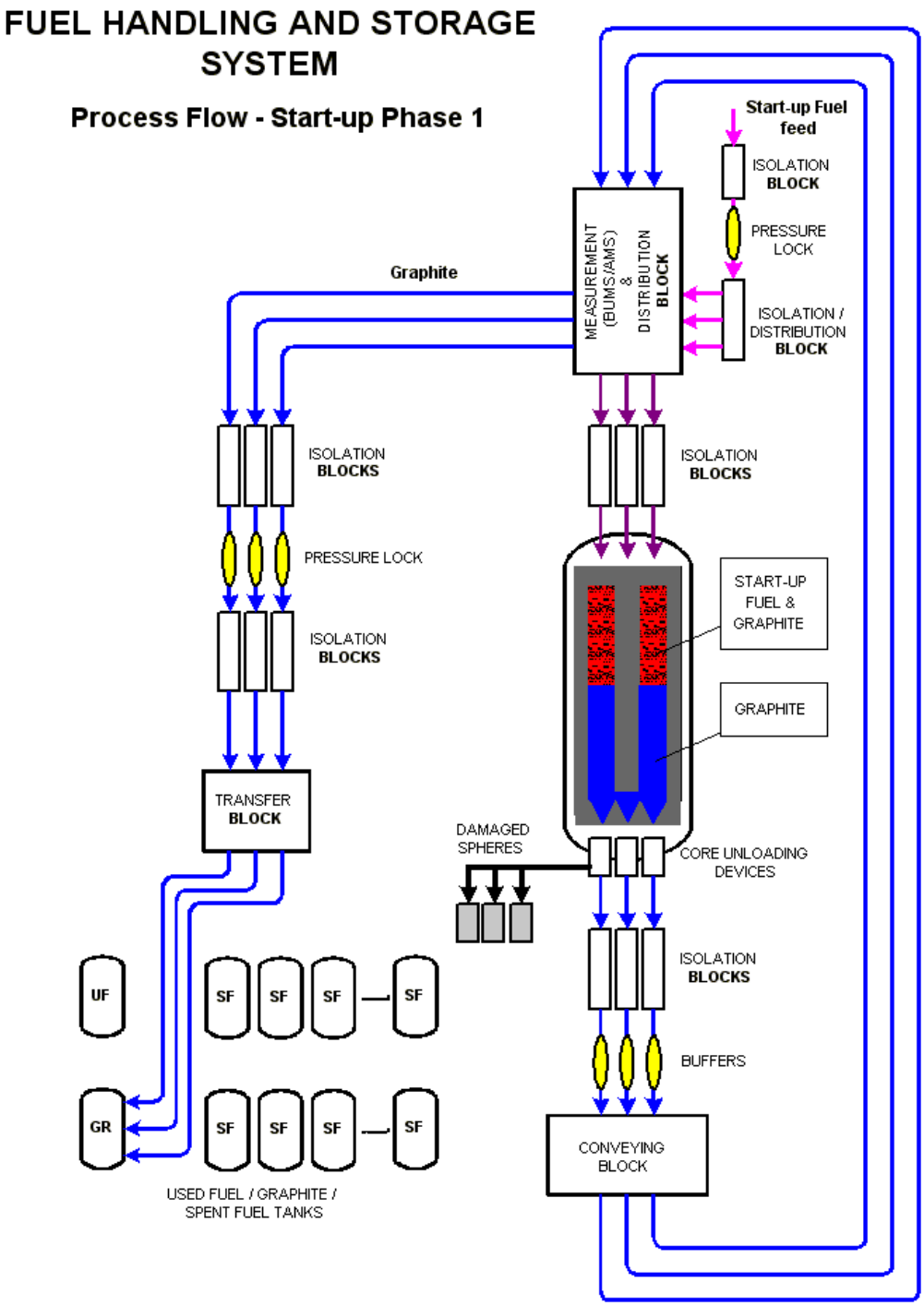

Figure 4.2-13: Start-up Core Circulation

Sphere Storage

- The storage of a full core load of graphite spheres as used during the initial core loading to criticality, and to be reused for subsequent outages that require defueling and refueling.
- The on-site storage of a six-month supply of fresh fuel. The fresh fuel is stored in canisters containing 1 000 fresh fuel spheres each.
- The on-site storage of used fuel in a tank, which can accommodate the fuel in a core when the entire core needs to be unloaded.
- There are ten on-site storage tanks for spent fuel. Each spent fuel tank is fitted with an extraction point for the removal of spheres to transportation containers. The requirement for on-site storage will be finalized during the conceptual design.

Sphere Circulation

- During normal operation, the SCS circulates the fuel and graphite spheres through the reactor core. The fuel and graphite spheres, or only the fuel spheres, depending on whether the reactor operates in the initial start-up mode or whether it is in the equilibrium mode, are circulated by means of a combination of gravitational flow and pneumatic conveying using helium gas at PHTS operating pressure, as the transporting medium. Under normal operating conditions, fuel spheres inside the conveying systems are exposed to a nominal maximum operating pressure of 9 MPa, and a temperature of 250°C.
- Spheres are removed via three discharge chutes at the bottom of the core by means of three Core Unloading Devices (CUDs). The CUD has a facility that can separate damaged or under-size spheres from the system. The spheres are pneumatically lifted to the top of the reactor, and after passing through the Activity Measurement System (AMS) to distinguish fuel from graphite, the burn-up is measured by means of the Burn-up Measurement System (BUMS). Spheres that do not exceed the permissible burn-up are returned to the RUS.
- Fuel spheres are recycled through the core nominally six times before the specified fuel burn-up is achieved.
- Once the spheres have reached their maximum burn-up, the Sphere Circulation Subsystem directs/discharges fuel to the Sphere Storage Subsystem and accepts fresh fuel from the Sphere Replenishment Subsystem to replace the discharged spent fuel. Worn and damaged fuel and graphite spheres can also be replaced if and when necessary.
- An extraction point is provided for the removal of fuel or graphite spheres for Post-irradiation Examination (PIE) purposes. The extraction process does not influence the normal operation of the PHTS, and is able to take place whenever on-line circulation is active, using a discharge lock and sample sphere container.
- The FHSS has the capability for separating and removing damaged spheres, sphere fragments and under-sized spheres from the circulation system. A facility is designed into the CUD where these are collected, and from where they will be removed to an (High Level Waste) HLW storage vault for long-term storage. The removal process

does not influence the normal operation of the PHTS, and is able to take place whenever on-line circulation is active.

The simplified process flow diagram for Normal Operation is shown in Figure 4.2-14.

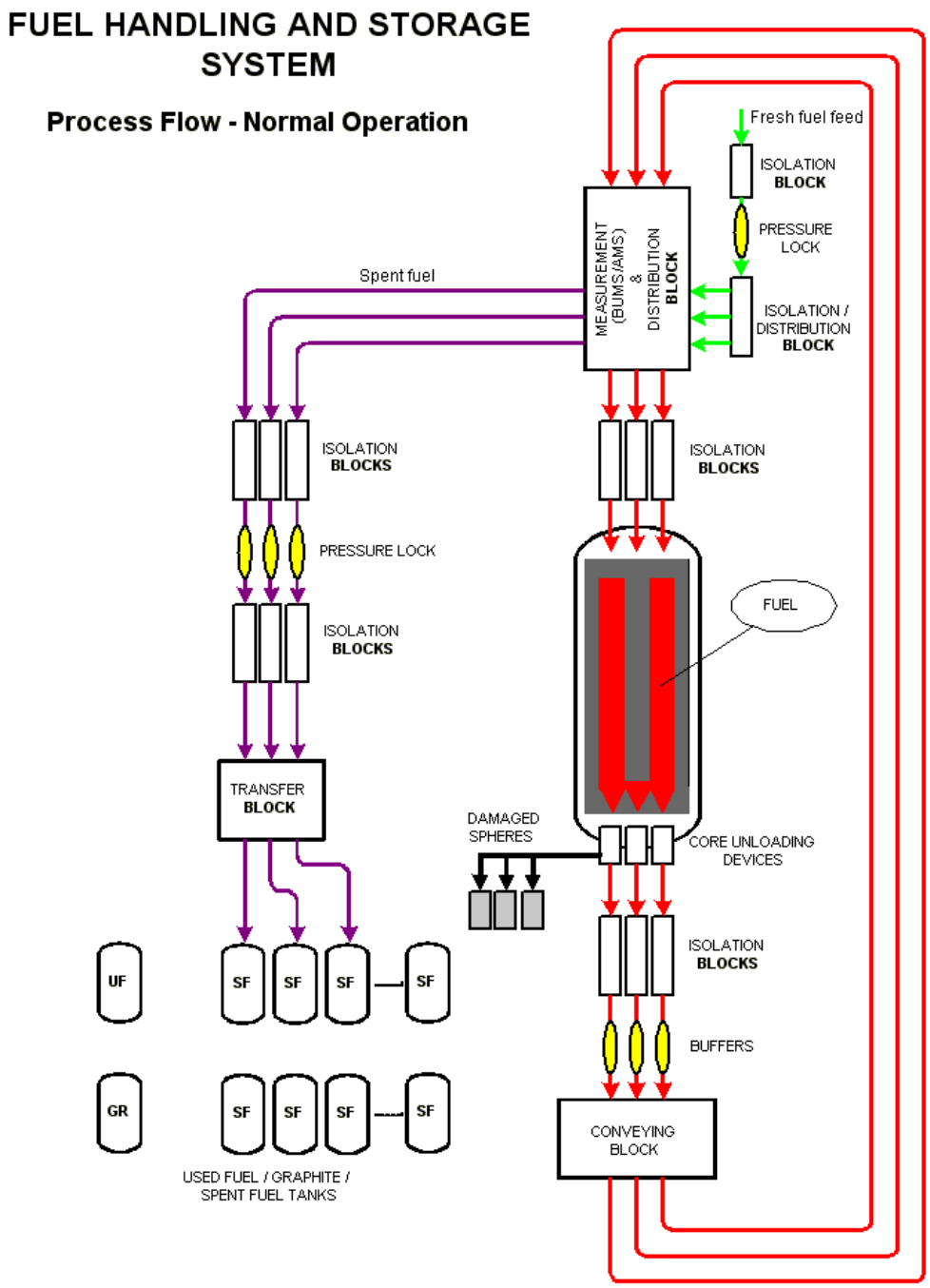

Figure 4.2-14: Simplified Process Flow Diagram for Normal Operation

Defueling and Refueling

- During an unscheduled maintenance shutdown, which requires the fuel to be removed from the reactor core, the Sphere Circulation Subsystem (SCS) is used to unload fuel spheres from the core and load graphite spheres into the top of the core in place of the fuel spheres – called defueling. During defueling the fuel spheres are stored in the used fuel storage tank. Defueling is not a planned operation for the scheduled maintenance shutdowns, except for the replacement of the Core Structure Ceramics. This process can be reversed and the used fuel spheres from the Used Fuel Tank (UFT) replace the graphite spheres in the core – called refueling. (This activity is carried out in conjunction with a loading to criticality procedure.)
- At the end of life of the NGNP, the SCS is used to remove the used fuel spheres of the last core from the reactor and discharge these into the UFT.
- During final decommissioning, the spent fuel spheres are removed from the SFTs and conveyed to a point where they can be loaded into the Spent Fuel Transport Casks suitable for final disposal at a designated site. This pneumatic conveying is achieved by means of clean, dry air at atmospheric pressure as the transporting medium. The used fuel and graphite spheres, stored in the Used Fuel Storage Tank and Graphite Storage Tank respectively, are removed and transported to the Spent Fuel Transport casks in the same manner.
- Damaged fuel spheres and dust extracted from the FHSS are stored as HLW in canisters in a vault in the NHSB for the duration of the expected plant life.

4.2.4 Reactor Cavity Cooling System

4.2.4.1 System Functions and Requirements

The functions of the Reactor Cavity Cooling System (RCCS) are:

Limit Component Temperatures:

- To provide investment protection by preventing thermal radiation from impinging directly onto the concrete walls of the reactor cavity. This must be done for normal and shutdown modes and accident conditions. The transition between active and passive operation must be automatic.
- 50 Percent of the standpipes must have sufficient capacity to remove the shutdown heat.

4.2.4.2 System Description

The RCCS is a constant flow, water-based cooling system, which removes heat from the reactor cavity. Heat collected by the RCCS during normal operation, will be transferred to the NHSS Cooling Water System. Loss of the NHSS Cooling Water System will result in the RCCS converting automatically to passive operation. Water from the Demineralized Water System (DWS – part of Balance of plant) and/or Fire Protection System (FPS – part of Balance of Plant) can be used to replace water lost by evaporation, and in this way, passive operating times can be extended indefinitely. The RCCS is seismically designed to be available during and after a Safe Shutdown Earthquake (SSE). The design of the RCCS will be based upon the DPP RCCS design, but will be upgraded for the NGNP heat load as determined during the conceptual design.

The main components of the RCCS are listed below:

- Standpipes (E in Figure 4.2-15 and Figure 4.2-16)
  - There are 72 oval standpipes, each containing cooled water at a mass flow rate of approximately 1.9 kg/s.

- Headers (D and G in Figure 4.2-15 and Figure 4.2-16)
  - The header tanks for the standpipes are located above, and to the side of, the reactor cavity and connected to the NHSS Cooling Water System.
  - From the main cold water header 18 branch pipes supply an intermediate header, from which four outlets supply the cold water to pipes connected to the standpipes.
  - After leaving at the top of the standpipes, the heated water from four standpipes recombines in the intermediate header and flows into the storage tank.

- Tanks (H in Figure 4.2-15 and Figure 4.2-16)
  - The RCCS water storage tanks can be filled from five independent points (two FPS, two from tankers, and one inhibited DWS). They, and the associated pipework from the tanks to the standpipes, have the same protection from external missiles as other components in the upper section of the reactor cavity. A level transducer provides remote indication of the water level. The level signal initiating automatic top-up of inhibited demineralized water.

- Orifices (At the bottom of H in Figure 4.2-15 and Figure 4.2-16)
  - A small bore pipe containing an orifice plate, will connect each tank to its corresponding cold water inlet pipe.

- Valves (W, Z and Y in Figure 4.2-15 and Figure 4.2-16)

- Filter (P in Figure 4.2-15 and Figure 4.2-16)
  - The RCCS is a closed system maintained at atmospheric pressure. To achieve this, the storage tanks are open to atmosphere via a particulate filter that prevents dust and other impurities from entering the system, but allows air transfer to balance the internal and external pressures.

4.2.4.3 Major System Interfaces

The RCCS interfaces with the following subsystems:

- The NHSS Cooling Water System: The NHSS Cooling Water System rejects heat received from the water heated in the RCCS.
- The Fire Protection System (Balance of Plant) replaces water that is lost by evaporation in the event of failure of the NHSS Cooling Water System.
- The Demineralized Water System (Balance of Plant) replaces water that is lost by evaporation in the event of failure of the NHSS Cooling Water System.

4.2.4.4 System Operation

The RCCS is a constant flow, water-based cooling system, which removes heat from the reactor cavity. Heat collected by the RCCS during normal operation, will be transferred to the Equipment Protection Cooling Circuit, within the NHSS Cooling Water System. The RCCS is a low-temperature and low-pressure system with water temperatures below 30°C during normal active operation, and reaching the boiling point only during emergency passive operation.

During active operation cold water is pumped from the NHSS Cooling Water System, through the tank missile protection wall to the main cold water header. Loss of the NHSS Cooling Water System will result in the RCCS converting automatically to passive operation, a mode which can continue unassisted for approximately 72 hours. This requirement will have to be confirmed during conceptual design.

During normal active operation, an insignificant amount of cold water will pass from the inlet pipe, via the orifice, into the tank, thereby bypassing the standpipes. A schematic process flow diagram of the RCCS for normal operation is shown in Figure 4.2-15.

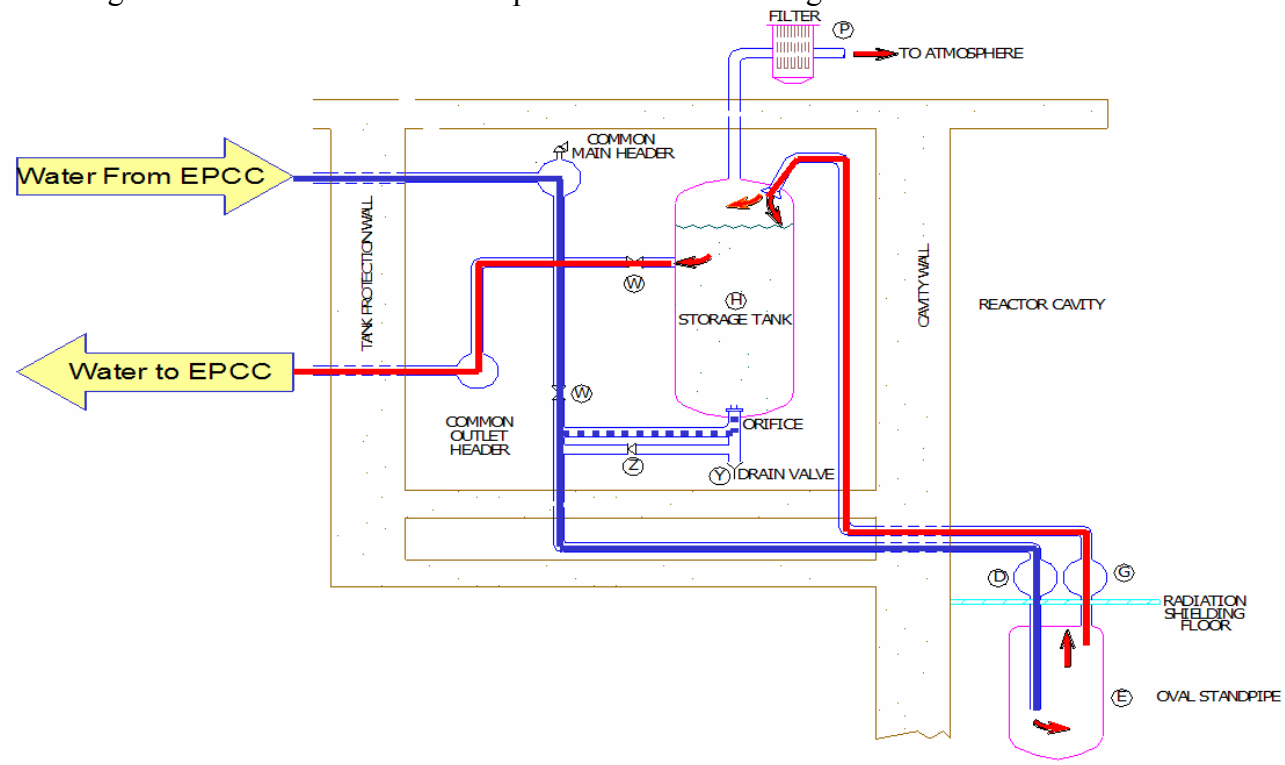

Figure 4.2-15: Schematic Representation of the Reactor Cavity Cooling System Function – Active Mode

Should the active system be lost, and the water in the standpipes heat up and then start to boil, water from the tank will gravitate through the orifice into the cold water inlet pipe, and hence into the standpipe, to replace water lost by evaporation. During this passive operating mode, steam will be collected above the water in the tanks, and will be released to atmosphere via a common steam heater and particulate filter. Water from the DWS and/or FPS can be used to replace that lost by evaporation, and in this way, passive operating times can be extended indefinitely. A schematic process flow diagram of the RCCS in passive operating mode is shown in Figure 4.2-16.

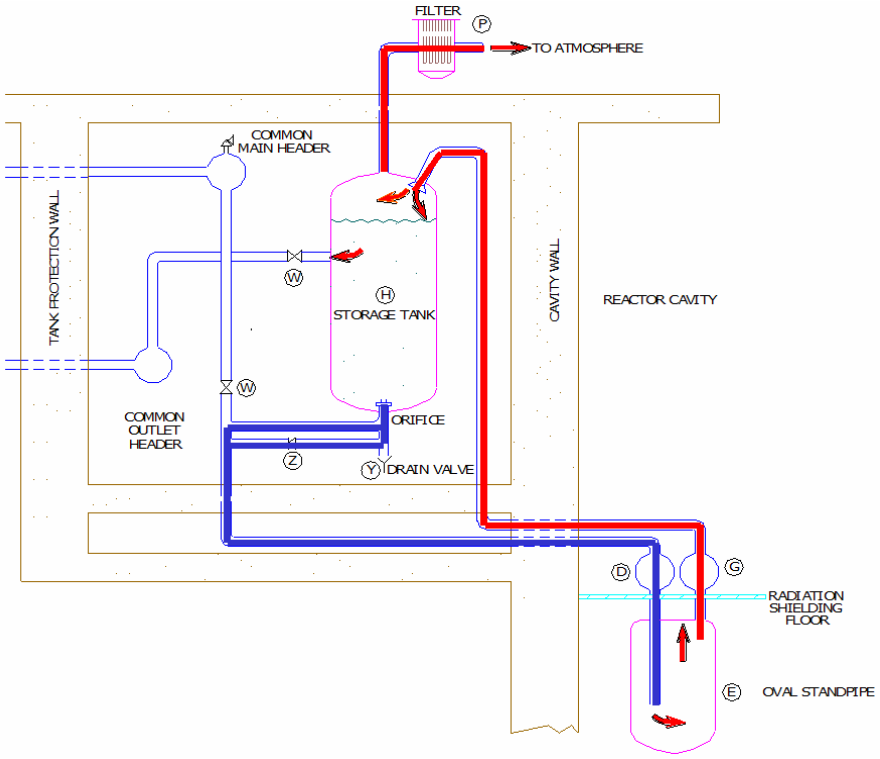

Figure 4.2-16: Schematic Representation of the Reactor Cavity Cooling System Function – Passive Mode

4.2.5 Primary Loop Initial Clean-up System

4.2.5.1 System Functions and Requirements

The main function of the PLICS is to remove moisture from the Core Structure Ceramics using heated nitrogen gas, after which gaseous contaminants (mostly nitrogen and oxygen) are removed from the vessels and systems (HTS, FHSS, Helium Services System (HSS)) that will eventually be containing helium to acceptable levels, to limit graphite corrosion and build-up of Carbon-14 (C-14). The function of the PLICS can therefore be summarized as:

Start Fission Reaction:

- To perform initial clean-up of the plant before first commissioning and after open maintenance.

Enable Maintenance:

- To perform clean-up during and after open maintenance on the Primary Circulator.
- To perform clean-up after core reflector replacement and other defuelled maintenance activities.

The PLICS cleans the PHTS and HICS to the following levels:

- The amount of nitrogen left in the total primary loop after the initial clean-up of the PHTS and HICS (including drying of the reactor after installation) and purging with helium is < [TBD] kg.
- The amount of nitrogen left in the PHTS following clean-up after open maintenance on the PHTS and purging with helium, is < [TBD] kg.

4.2.5.2 System Description

The PLICS consists of six subsystems:

- PLICS Electric Heater (PEH)
- PLICS Electric Heater Power Supply (PEHPS)
- PLICS Vacuum System (PVS)
- PLICS Nitrogen Source
- PLICS Piping System
- PLICS Electrical Heater Sub-building

4.2.5.3 Major System Interfaces

The PLICS has major interfaces with:

- Flow paths with the RUS and CCS,
- Evacuation connections with the RUS, FHSS, HTS CCS and HSS.

4.2.5.4 System Operation

The PLICS operates only during non-power operation of the Reactor Unit System. The PLICS has two operating stages, drying and evacuation, which are discussed in the following subsections.

Drying Stage:

- Drying is performed for before first commissioning of the plant, after core replacement and other defuelled maintenance operations
- The following is done to perform adequate drying of the RUS internals:
  - Maintain reactor pressure at 300 kPa
  - Heat the graphite internals to between 200°C and 250°C with the PEH using Nitrogen gas from a mobile nitrogen source
  - Circulate the nitrogen with the CCS blowers
  - The MSDs are closed during operation

Figure 4.2-17 illustrates the drying process.

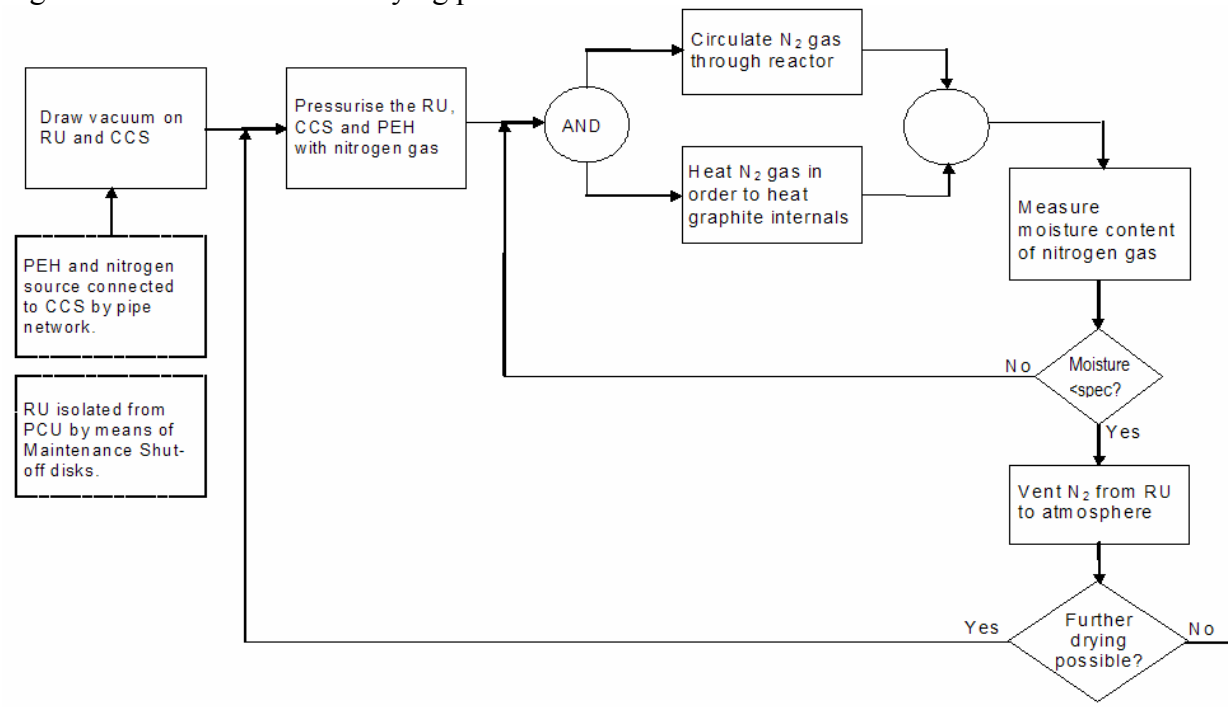

Figure 4.2-17: PLICS Drying Stage Functional Flow Diagram

Evacuation Stage:

- During the evacuation stage oxygen(O_2), nitrogen (N_2) and other gases are removed from the HTS and the HSS
- Evacuation is performed before commissioning, after open maintenance on the PHTS and HSS and after defuelled maintenance
- The following is done to perform adequate evacuation:
  - Evacuate to a minimum pressure of 1 kPa (abs)
  - Acceptable levels of helium purity are obtained by alternate cycles of evacuation and purging.
  - Helium and air that are blown down are filtered by the PVS filter system before being released into the HVAC exhaust duct.

Figure 4.2-18 shows the evacuation stage functional flow diagram for the PHTS.

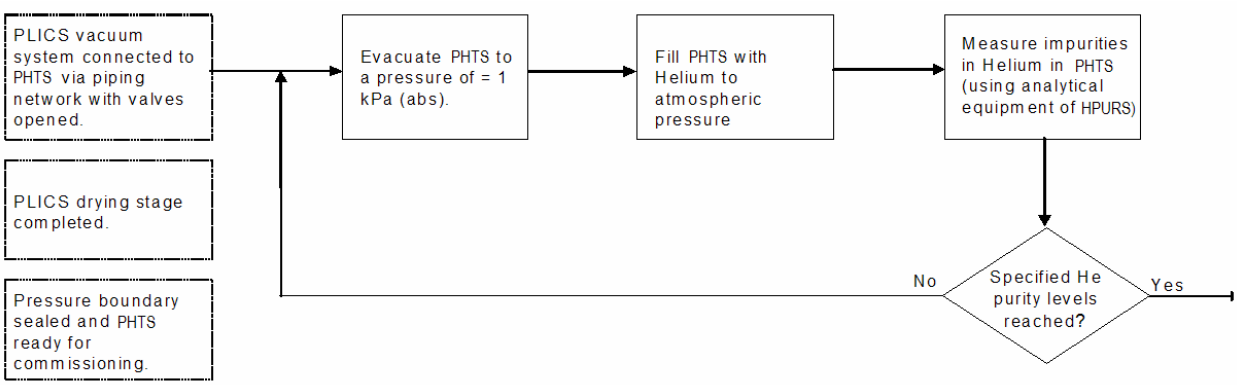

Figure 4.2-18: PLICS Evacuation Stage Functional Flow Diagram (Initial Clean-up of PHTS)

4.2.6 NHSS Cooling Water System

4.2.6.1 System Functions and Requirements

The function of the NHSS Cooling Water System is to remove waste heat generated in the NHSS during operation, including the removal of decay heat during reactor shutdown, and to transfer this heat to the BOP Component Cooling Water System (CCWS). The functions of the NHSS Cooling Water System can be summarized as:

Limit Component Temperatures:

- Provide heat removal for PLICS, FHSS and HSS to the CCWS
- Transfer heat collected in the CCS and RCCS to the CCWS

4.2.6.2 System Description

The NHSS Cooling Water System consists out of two subsystems, an Auxiliary Cooling Circuit (ACC) and an Equipment Protection Cooling Circuit (EPCC).

Auxiliary Cooling Circuit

The Auxiliary Cooling Circuit is a closed-circuit heat removal system that circulates inhibited demineralized water at near atmospheric pressure. The Auxiliary Cooling Circuit is provided with two 100% fixed-speed pumps and two 50% heat exchangers. The cooling circuits for the HSS, and the FHSS components, have a direct interface with high-pressure helium via gas-water heat exchangers, and are therefore located on the Auxiliary Buffer Circuit.

Should any of these interfaces fail, helium will enter the water circuit, pressurizing the circuit beyond the design pressure. To prevent damage to the buffer circuit, rupture discs, pressure control valves and vent pipes protect the buffer circuit itself. The buffer circuit has two 100% capacity single speed pumps. If the in-service pump fails, the pump on auto-standby will immediately start. The pipe work configuration allows either of the pumps to be used with either of the heat exchangers. Twin 100% plate heat exchangers are provided, each fitted with backwash, sampling and drainage facilities. Changeover between heat exchangers is automatic.

A simplified schematic diagram for the Active Cooling Circuit is presented in Figure 4.2-19.

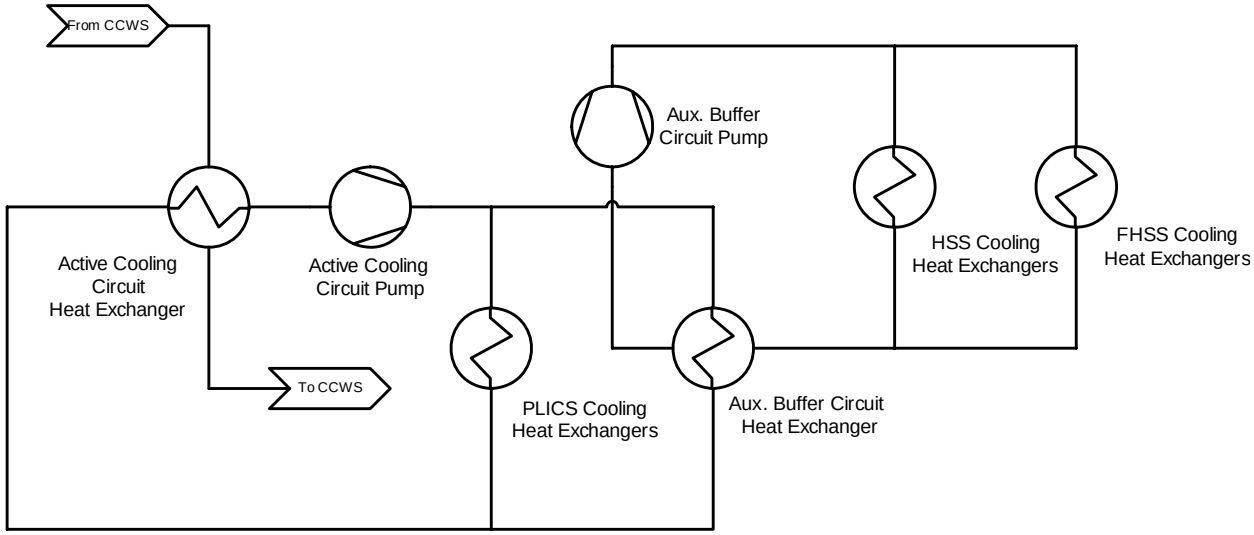

Figure 4.2-19: Simplified Schematic Diagram for Active Cooling Circuit

Equipment Protection Cooling Circuit

The Equipment Protection Cooling Circuit (EPCC) consists of pumps, heat exchangers, and associated piping, valves, controls, and instrumentation. The major components are installed in the Cooling Water plant room. The cooling circuits for the CCSS have a direct interface with high-pressure helium via gas-water heat exchangers, and are therefore located in the CCS Buffer Circuit.

The CCS buffer circuit is a closed-circuit cooling water system that circulates inhibited demineralized water at near atmospheric pressure between the Core Conditioning heat exchangers and the CCS buffer circuit heat exchangers. Piping between the CCS heat exchangers and CCS buffer circuit heat exchangers is located in the NHSB. It is designed with two constant speed 100% pumps, one of which is in service under all operating conditions, the other on standby. The CCS buffer circuit provides for pressure relief, containment of, and the handling of helium and noble gases that leak into the system. This prevents pressurization of the EPCC by high-pressure gas, reduces the likelihood of radioactive gas passing to the atmosphere.

A simplified schematic diagram for the Active Cooling Circuit is presented in Figure 4.2-20.

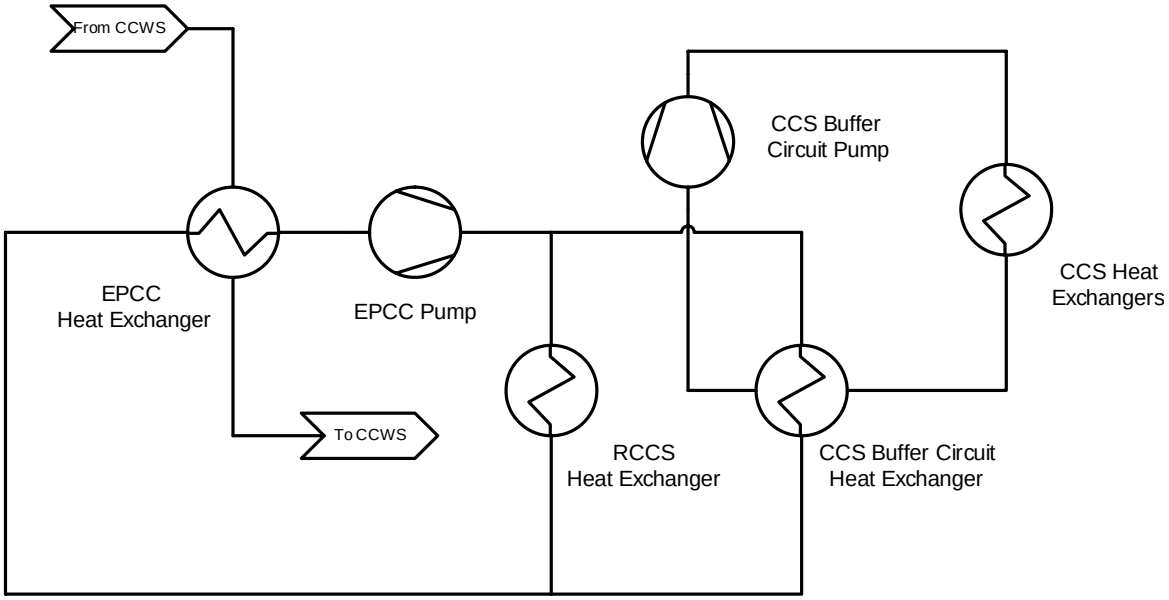

Figure 4.2-20: Simplified Schematic Diagram for Equipment Protection Cooling Circuit

4.2.6.3 Major System Interfaces

The Auxiliary Cooling Circuit interfaces with the following systems by circulating cooled water to each:

- CCWS
- The FHSS (via the Auxiliary Buffer Circuit)
- The HSS (via the Auxiliary Buffer Circuit)
- The PLICS

The EPCC interfaces with the following systems by circulating cooled water to each.

- CCWS
- CCS (via the CCS buffer circuit)
- RCCS

4.2.6.4 System Operation

During power operation, all heat loads except those from the CCS are present and are transferred to the CCWS. The CCS buffer circuit remains in service in anticipation of a failure of the HTS Circulators.

During shutdown conditions the heat loads from the process wetted, and non-wetted, auxiliaries are reduced and the CCS picks up the fission product decay heat load. The RCCS continues to operate in the active mode to protect the concrete. These loads are again transferred to the CCWS. During plant maintenance, as long as there is fuel in the reactor, the CCS buffer circuit remains in service.

The equipment cooled by the Auxiliary Cooling Circuit is essential for power operation, but not required in the shutdown state. The system has no role in the removal of reactor decay heat. Cooling failure will thus lead to reactor shutdown. Heat transferred to the cavity will be removed by the active part of the RCCS, and decay heat will largely be transferred by the CCS via the buffer circuits to the EPCC.

All the Cooling Water Systems are engineered to a high standard with redundancy in pumps, supplies and heat exchangers. The NHSS Cooling Water System and CCWS designs will be evaluated during the conceptual design to ensure that both systems are designed to ensure that the appropriate levels of availability and reliability are achieved.

4.2.7 Helium Services System

4.2.7.1 System Functions and Requirements

The functions of this subsystem are to:

Maintain Coolant Helium:

- Maintain the helium pressure within the HTS and RUS.
- Provide helium storage for the NHSS during a maintenance outage.
- To remove gaseous contaminants including water vapour from the PHTS and SHTS.
- Remove Tritium from the PHTS and SHTS.
- To provide an initial fill of helium to the NHSS.
- To replenish helium leakages from the NHSS.
- To supply dust-free helium to the submerged blowers of the CCS and the FHSS.

4.2.7.2 System Description

This section will provide a summary description of the major subsystems and components of the Helium services system.

Helium Inventory Control System

Helium is transferred by extracting helium from the part of the PHTS and SHTS that is under the highest pressure, and transferring it into storage vessels (via Helium Purification System), or injecting helium from the storage vessels into the PHTS and SHTS. Since the HTS helium circulators won't supply a very large pressure rise the pressure rise required for the transport of the helium from the HTS to the storage vessels will mainly be performed by the ICS compressors. The Helium Inventory Control System consists of three storage tanks, which will be confirmed during the conceptual design.

- Major components of the ICS
  - Helium Storage Vessels
  - Valves
  - Pressure Relief Valves and Bursting Discs
  - Main Compressor
  - Multi-purpose Compressor
  - Piping

Helium Purification System

The Helium Purification System (HPURS) is used to provide the required degree of helium purity. High purity coolant is required in order to minimize corrosion and contamination in the PHTS and SHTS. This is done by bleeding off a partial flow of helium from the PHTS and SHTS. The extraction point is from the highest pressure points, i.e. the PHTS and SHTS

circulator discharges within the HTS. This flow is tapped off constantly during operation of the plant. The HPS removes chemical gaseous contaminants from the primary coolant within the PHTS by the use of, catalysts, adsorbers and the manipulation of helium temperature extracted from the PHTS and SHTS. The required helium purity levels will be confirmed during the conceptual design.

- Major Components
  - Heater
  - Catalytic Converter – converts CO to CO_2 and H2 to H_2O
  - Oxygen Cylinder – regenerates catalytic converter
  - Water Cooler (200 °C)
  - Chiller – provides 5 °C water
  - Water Separator – removes condensate
  - Water Collection Tank
  - Recuperator
  - Molecular Sieve – removes CO_2 and H_2O
  - Low-temperature Recuperator
  - Cryogenic/Liquid Nitrogen Cooler
  - Liquid Nitrogen Storage Tank
  - Liquid Nitrogen Pump
  - Activated Carbon Filter –removes CH_4
  - Blower – provides necessary flow rate
  - Regeneration Heater
  - Regeneration Water Cooler
  - Regeneration Blower
  - Regeneration Water Separator
  - Piping
  - Valves
  - Pressure Relief Valves and Bursting Discs
  - Filters – removal of dust
  - High temperature adsorber (delay trap)

Helium Make-up System

The Helium Make-up System (HMS) replenishes the small leakages from the PHTS and SHTS. This is done by transferring purified helium from commercially available helium storage containers into the ICS storage vessels. A limited supply of these containers is stored on site and replaced on an ongoing basis when necessary. The PHTS and SHTS are initially filled with external liquid helium containers connected via the HMS to the ICS storage vessels. Before maintenance the PHTS and SHTS is depressurized through the HPURS, and after maintenance the PHTS and SHTS is pressurized from the ICS storage tanks.

- Major Components
  - Compressors
  - Valves
  - Pressure Relief Valves
  - Piping
  - Cylinder Banks – Fresh Purified Helium
  - Initial Fill Liquid Helium Container
  - Initial Fill Pump

4.2.7.3 Major System Interfaces

The major system interface of the Helium Services System is the following:

- PHTS
- SHTS
- FHSS
- CCS
- RUS

4.2.7.4 System Operation

Helium is extracted from the HTS at the circulator discharges extraction points. The Helium first flows through the HPURS, where the helium is filtered and purified before it is stored in the Helium Storage Vessels. The ICS compressors are utilized to transport the helium when there is not sufficient pressure differential between the Helium Storage Vessels and the Heat Transport System.

4.2.8 Nuclear Heat Supply System HVAC System

4.2.8.1 System Functions and Requirements

The NHSS Heating Ventilation and Air-Conditioning (HVAC) system provides appropriate heating, ventilation and air conditioning for the Nuclear Heat Supply Building (NHSB). The system provides filtration of all exhaust streams of the plant that have the potential for radioactive contamination. Standby power is provided to essential systems as determined by risk informed safety analysis.

The HVAC system functions include the following:

- Maintain environments within comfort levels for operating and maintenance personnel, and ensure reliable equipment operation.
- Provide ventilation rates required to maintain indoor air quality for personnel in accordance with ASHRAE (American Society of Heating, Refrigeration and Air-conditioning Engineers) Standard 62 [4-2].
- Provide ventilation required for processes and equipment.
- Maintain pressure differential and flow paths between rooms in the NHSS building to prevent contamination migration to adjacent areas.
- Provide adequate filtration of exhaust streams to prevent release of any contaminants into the atmosphere.
- Provide adequate isolation capability to augment the fire protection system ability to contain fire suppressants, combustion products, and high temperatures during fire events.
- Provide smoke removal capability in accordance with National Fire Protection Association (NFPA) requirements [4-3].

4.2.8.2 System Description

The NHSS HVAC system consists of a water-cooled chilled water system supplying chilled water to fan coil units throughout the building, as well as to once-through fresh air supply Air Handling Units (AHUs) serving three pressure zones. Extract air systems extract air from the three pressure zones to maintain the set pressures in the three zones.

In order to direct air leakage between rooms from less or more contaminated rooms, the rooms are kept at static pressure differential with the more contaminated room at a lower static pressure. This zoning includes three pressure zones, namely:

- Static pressure Zone 3: All controlled zones containing components with radioactive gases and particles.
- Static pressure Zone 2: All controlled areas which are not Zone 3.
- Static pressure Zone 1: All uncontrolled zones with no nuclear radiation exposure.

The pressure zones are controlled at the following static pressures irrespective of filter condition:

- Static pressure Zone 3: -90 Pa to -110 Pa gauge pressure
- Static pressure Zone 2: -40 Pa to -60 Pa gauge pressure
- Static pressure Zone 1: Atmospheric pressure or above

Two separate self-contained split-package unit installations provide controlled conditions to the module shutdown room, RPS rooms and Post-event Instrumentation (PEI) rooms. A mechanical ventilation extract system is provided for the PEI battery rooms.

The NHSS HVAC System comprises the following subsystems:

- Static Pressure Zone 3 system
- Static Pressure Zone 2 system
- Reactor shutdown air-handling and extract ventilation systems for the Post-event Monitoring and Recovery (PEMRR) Compartments
- RPS compartments and the PEI and battery compartment extract ventilation
- Post-event Clean-up System (PECS) ventilation
- Reactor Cavity ventilation system (Part of Zone 3 PCU Fan Coil Units)
- Reactor Top Cavity (RTC) HVAC System (Part of Zone 3 Fan Coil Units)
- Zone 1 and Uncontrolled zone HVAC Systems

4.2.8.3 Major System Interfaces

The NHSS HVAC system interfaces with the following major systems:

- Nuclear Heat Supply Building
- BOP HVAC System
- NHSS Instrument and Control System
- Chilled Water System from Balance of Plant
- Fire detection and Suppression System
- Security System
- Radiation Monitoring System

4.2.8.4 System Operation

The NHSS HVAC system is operated continuously and controlled and monitored from the Central Control & Supervisory System (CCSS).

4.2.9 NHSS Electrical Systems

4.2.9.1 System Functions and Requirements

The NHSS electrical system is connected to the Plant Electrical Distribution System which supplies electricity to the NHSS systems under various conditions.

The functions of the NHSS electrical system are the following:

- Provide environmental lighting at all levels inside the NHSB
- Provide maintenance power at all levels inside the NHSB
- Provide electrical distribution from BOP electrical supply for NHSS
- Provide Power Supply to the RPS and Post-event Instrumentation (PEI) during and following Design Basis Accidents

4.2.9.2 System Description

The NHSS Electrical System distributes electrical power from the Plant Electrical Distribution System to NHSS subsystem electrical loads. The NHSS Electrical system consists of a Protection System Power Supply providing power to the RPS and Post-event Instrumentation (PEI) during and following Design Basis Accidents. The Protection System Power Supply consists of three independent, separate UPSs with battery backup that will provide power following any DBA that renders the Plant Electrical Distribution System out of service.

Class 1E Protection System UPSs and batteries are the only source of post-accident power. The Protection System UPSs constitute three separate UPSs in redundant configuration. The UPSs supply power to three independent divisions of Class 1E instrument buses for the RPS and PEI Systems.

The UPS Systems are qualified in accordance with IEEE Std 323-1983 and IEEE Std 344-1987 for operation during and after the SSE. The effects of ageing, via testing or analysis, are considered. The effects of higher than normal temperatures in the period after a design basis accident (under Station Blackout conditions) are considered in the ageing criteria.

The batteries for the Class 1E system are housed in the Module Building in ventilated rooms apart from the UPSs and distribution equipment. Each of the three divisions of power systems are electrically isolated and physically separated to prevent an event from causing the loss of more than one division.

Nickel Cadmium batteries are sized to supply the full steady load for the specified period. The batteries are sized for a 20% spare capacity and with an ageing factor of 125%.

4.2.9.3 Major System Interfaces

The NHSS electrical systems interface with the following components and systems:

- BOP Plant Electrical Distribution System
- HTS Circulators
- CCS Circulator
- EPCC Pumps
- Auxiliary Cooling Circuit Pumps
- Reactor Protection System (RPS)
- Reactivity Control System (RCS)
- Reserve Shutdown System (RSS)
- Nuclear Heat Supply Building (NHSB)

4.2.9.4 System Operation

The Class 1E UPSs receive ac power from the Auxiliary Electrical Power reticulation system as indicated in Balance of Plant. The Class 1E batteries are kept in a charged state via the UPS rectifier. Each battery is available during both normal operation and following the loss of power from the preferred or standby power supply systems.

Each UPS inverter is powered from a Class 1E battery bank in case of a loss of the normal ac source or a rectifier fault. Under normal operation, the Class 1E UPSs receive ac power from the Auxiliary Electrical Power reticulation system as indicated in Balance of Plant. The Class 1E batteries are kept in a charged state via the UPS rectifier. Each battery is available during both normal operation and following the loss of power from the preferred or standby power supply systems.

The stored energy capacity of the batteries is sufficient to provide an adequate source of power to the load for a period of 30 h following the loss of supply to the battery charger (i.e. 24 h plus a 6 h margin in order to start the Standby Power Supply).

If an inverter is inoperable or the Class 1E dc input to the inverter is lost, the power is transferred automatically to the normal ac bypass by a static transfer switch featuring a make-before-break contact arrangement. In addition, a manual, mechanical bypass switch is provided to allow connection of the bypass power source when the inverter is isolated from service for maintenance purposes.

Components of the UPS and battery systems undergo periodic maintenance tests to determine the condition of the system. The electrolyte levels of batteries are checked, cell voltages are checked, and a visual inspection is carried out. Full load capacity tests are carried out on battery systems during the six-yearly maintenance outages.

UPS equipment is specified and selected to meet the NGNP five-yearly outage cycles as described in Section 12. Breakdown maintenance on the UPS is carried out using the static and manual bypasses to maintain power to the Protection System loads.

4.2.10 NHSS Control and Instrumentation System

4.2.10.1 NHSS C&I General Overview

The NHSS Control and Instrumentation System comprise only of equipment found in the Nuclear Heat Supply Building and all operator interaction is performed in the Central Control & Supervisory System (CCSS) as described in the Section 9: Balance of Plant Systems. The primary systems comprising the NHSS Control and Instrumentation system are the Operational Control System (OCS), the Equipment Protection System (EPS) and the Reactor Protective System (RPS).

The OCS monitors and controls the NHSS systems throughout their normal operating range. The EPS detects operating regimes or operating conditions that may be harmful to NHSS equipment, and takes appropriate action to prevent or minimize potential damage. The RPS automatically initiates RUS protection whenever pre-established set points are exceeded.

The OCS is extensively integrated with the Central Control & Supervisory System (CCSS), which is described in section 9: Balance of Plant Systems. The OCS is therefore not further described in this section as part of the preconceptual design. A description on the EPS and RPS is however provided.

4.2.10.2 Equipment Protection System

4.2.10.2.1 System Functions and Requirements

The EPS is a highly reliable system designed to reduce the risk of financial loss due to Operational Control System (OCS) control failure to a tolerable level. To meet this requirement, the EPS performs automatic protective functions, as well as control functions.

For its protective functions, it monitors selected plant equipment, estimates plant and component conditions, and initiates appropriate protective actions when pre-established set points are exceeded. For its protection functions, once the EPS protective action is completed, the EPS awaits a manual reset command from the operator before returning the command of the control devices and control rods to the OCS. The EPS does not provide ongoing control after its protection function was performed. The manual reset is not required for its control functions.

Equipment protection functions are functions that are implemented in the EPS with the sole purpose of protection against unplanned events that can cause significant financial loss as a result of lost production and repair costs and for which the provision of a high integrity protection system could decrease the risk of loss to a tolerable level. By protecting equipment against damage the frequency of AOOs related to the equipment is also decreased.

Where the OCS and EPS share actuators (i.e. control rods), the EPS control signals carry highest priority and override OCS control signals. No OCS control can prevent an EPS function.

The plant control operator interface to the EPS is via a set of soft control devices and visual display units which are common with that of the OCS and located in the Central Control & Supervisory System (CCSS).

4.2.10.2.2 System Description

The EPS is implemented independent from the OCS. Where the OCS and EPS share actuators (e.g. the reactivity control rods), the override process is achieved via priority controls. These modules provide a single control access point to an actuator for the EPS and OCS and assure that the EPS has control priority of the actuator device. An overview of the major components that constitute the EPS, together with the main interfaces, can be found in Figure 4.2-21.

The EPS equipment, including associated cables and connectors, is environmentally qualified to ensure that the equipment is capable of performing their functions while exposed to environmental conditions arising from normal operating conditions, and from Anticipated Operational Occurrence (AOOs) under which the equipment is required to operate. The environmental qualification must be accomplished through equipment testing.

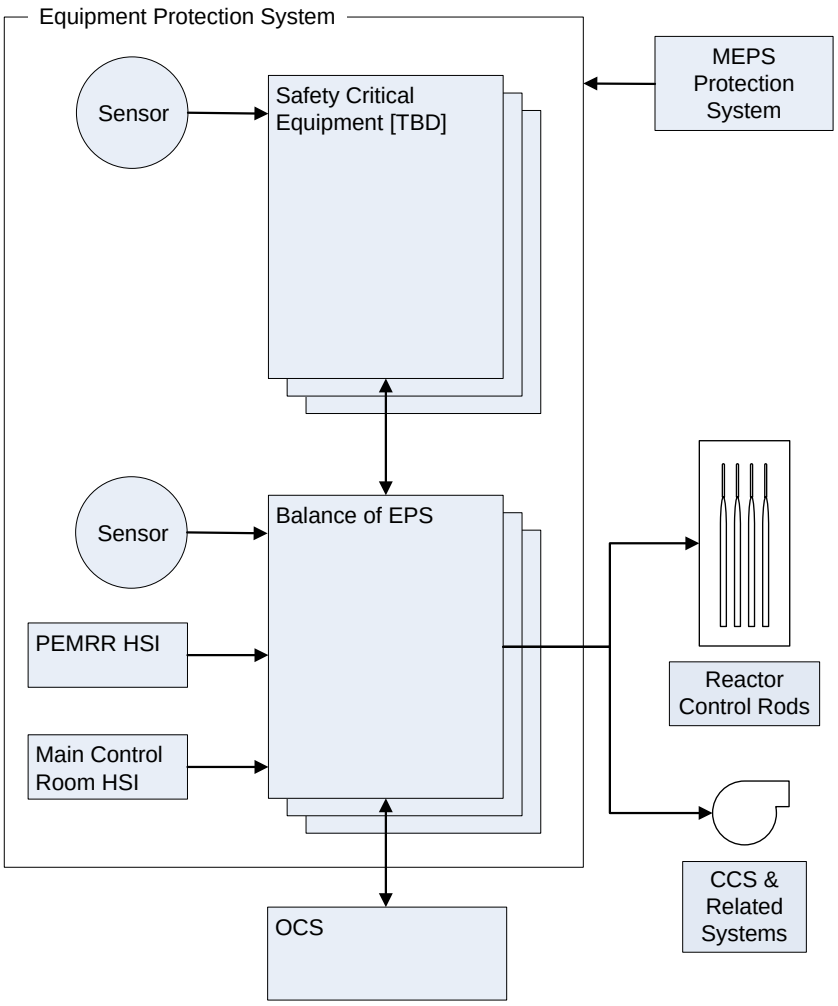

Figure 4.2-21: EPS Architecture Overview

4.2.10.2.3 Major System Interfaces

The EPS interfaces to other C&I systems, as well as to NHSS SSCs. The EPS interface with the following major components:

- The EPS Network interface to the OCS.
- The EPS has a discrete signal interface to the OCS.
- The EPS has a discrete signal interface to the RCS' rod drive controller. The EPS is connected to the RCS's rod drive controller cabinets via discrete signal wiring. This interface enables the EPS to initiate insertion of all the reactivity control and shutdown rods.

- The EPS has a discrete signal interface to the Plant Electrical Distribution System. This interface enables the EPS to detect a trip that is initiated by the Plant Electrical Distribution System and a loss-of-load transient.
- The EPS has an interface to the CCS and related systems.

4.2.10.2.4 System Operation

The EPS protection functions are decomposed into the following functional elements and are graphically depicted in Figure 4.2-22.

Sensing: The sensing function is performed by sensors, e.g. thermocouples that generate milllivolt output signals in response to process temperature.

Input Processing: Input processing is performed by the EPS logic solver or by intelligent field devices with due consideration to elimination of systematic errors. The function of processing sensors is to provide output signals, such that they are usable for protection or information display. Input signal validation also forms part of input processing.

Logic Processing: The EPS perform logic processing for the generating of protection outputs from plant or process variables, and control algorithms (e.g. interlocks).

Output Processing: Output processing is performed by the EPS logic solver with due consideration to elimination of systematic errors. The function of generating output signals is performed to actuate final control elements from the logic processors' control outputs.

Final Element: The function is performed to convert the EPS output signal into action or motion to accomplish a protection objective. Actuators are not part of the EPS. Only interfaces to plant and process actuators are addressed in this section. Final element diagnostics and proof testing will be used to ensure availability requirements are met.
Note: Where practical, the EPS initiates protective actions that are diverse from that of the OCS controls.

Human-System Interfacing: The function is performed by the Human System Interface (HSI) in the control rooms and some functionality is shared between the OCS and EPS. The EPS provide visual and/or audible information to an operator (e.g. process alarms), and the function will allow operator commands into the system.

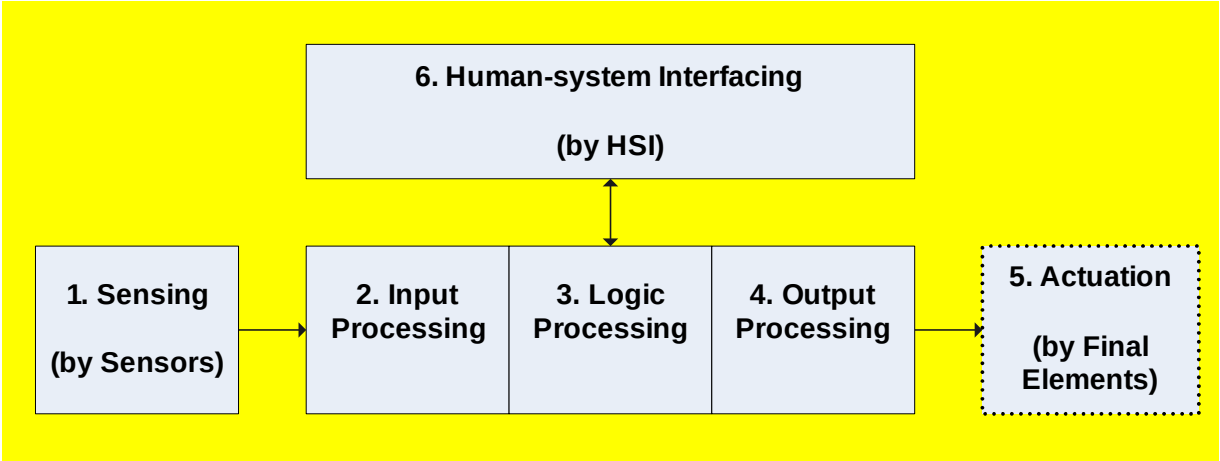

Figure 4.2-22: Elements of EPS Functions

4.2.10.3 Reactor Protection System

4.2.10.3.1 System Functions and Requirements

The RPS consists of three subsystems: Reactor Trip System (RTS), Post Event Instrumentation System (PEI) and the Manual Diverse Shutdown System (MDSS). The RPS provides functions to prevent exceeding predefined safe operating limits and to provide information to operators in the event of nuclear accidents.

The Protection System is implemented using a Class 1E qualified digital platform that is capable of performing logical operations as well as algorithmic processing. The same platform is used for both the RTS and the PEI applications. The MDSS is a hard-wired system that allows tripping the breakers without dependence on any software. All portions of the RPS are treated as Class 1E Structures, Systems and Components (SSC).

The Protection System functionality can be summarized to consist of:

- Providing Automatic Reactor Protection
- Enabling Manual Reactor Trip Initiation
- Providing Post-Event Information to the Operator
- Performing Operational Verification
- Providing for Periodic Testing and Maintenance

To provide Automatic Reactor Protection, the Protection System monitors plant processes and provides automatic actuating signals that result in tripping the RUS when required. To provide Post-Event Information to the Operator, the Protection System monitors plant processes and provides information to the plant operators. The Protection System also provides plant and system status information to external monitoring systems.

4.2.10.3.2 System Description

The RPS consists of three separate and redundant channels (A, B and C) – also referred to as 'divisions'. There is also a "channel" N for handling of PEI non-1E signals. The channels are physically and electrically separated from each other. The interconnectivity between channels is illustrated in Figure 4.2-23. Each of the three redundant channels is composed of field sensors, ex-core neutron flux monitoring system inputs, a reactor trip cabinet, a maintenance and test cabinet, Main Station Room (MCR)/PEMRR equipment (including flat panel display touch screens), and reactor trip breakers.

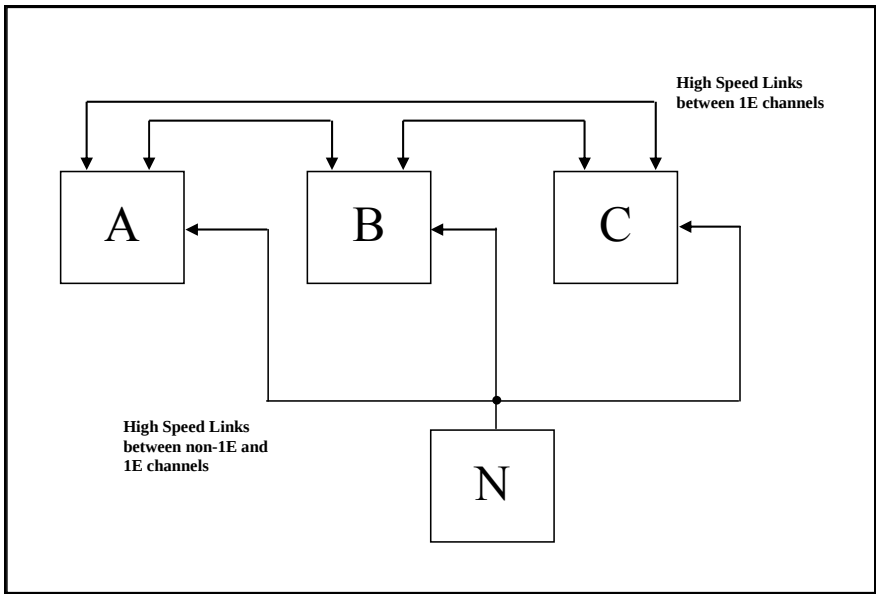

Figure 4.2-23: Reactor Protection System – Interconnectivity

The PEMRR provides a control desk for emergency operations, and facilities to house all necessary procedures and information to support the operator's task during and after an upset event. The control desk consists of visual display units that display all operational information, redundant PEI/RPS display panels, keyboard, hard controls with diverse displays and plant-wide communication facilities.

The display system consists of a qualified Flat Panel Display (FPD) with integral touch-screen and local display processor. The PEI is highly reliable and fault tolerant. This is ensured by using independent and redundant instrumentation channels. The PEI consists of three independent channels that are physically integrated with the RTS system within each channel.

4.2.10.3.3 Major System Interfaces

Interfaces with Plant Processes

Plant Processes are monitored by a Sensing System. The interface between the Sensing System and Plant Processes is unidirectional in the direction of the Sensing System. The interface consists essentially of the various process parameters that provide information on the status of the plant Structures, Systems and Components (SSC) that are of interest to the RPS.

Plant Processes are affected by the RPS by means of a Reactor Trip Circuit Breaker System. The interface between the Reactor Trip Circuit Breaker System and the Plant is unidirectional in the direction of the Plant. The interface consists of Reactor Scram (RS), accomplished by dropping the RCS control and shutdown rods, and of the activation of the RSS. Both the RS and RSS activations are accomplished by interruption of electrical power to the RCS and RSS systems.

Interfaces with the Operators and I&C Personnel

Plant personnel interface with the RPS in several ways:

- Operators receive information from Protection System Display touch screens located in the Main Station Control Room and the PEMRR. This information consists of RTS and PEI data, including overall RPS status.
- Operators use the touch screens to provide limited input to the Protection System, such as establishing Operating Bypasses and resetting the Trip Breakers.
- Operators use the MDSS switches located in the MCR and the ECR to initiate a manual reactor trip.
- Plant I&C personnel interact with Flat Panel Display touch screens that are part of the Maintenance and Test Panels (MTP). The MTPs are located in the Maintenance and Test Cabinets (MTC), which in turn are located in the Protection System rooms. The MTPs are used primarily for periodic maintenance and test activities, but also to change tunable parameters and troubleshoot the system.

Interfaces with the Plant Computer

The RPS interface with the Plant Computer is strictly unidirectional, in the direction of the OCS. There is no information sent by the OCS to the Protection System. It is not possible to propagate failures in the Plant Computer to the RPS.

Interfaces with the Plant Electrical Distribution System

Electrical power is provided by the Plant Electrical Distribution System to the RPS. In addition to power supplies in the various cabinets, the Plant Electrical Distribution System provides motive power for the RCS rods and the RSS that is interrupted by the Reactor Trip Circuit Breaker System.

4.2.10.3.4 System Operation

Reactor Trip System of the Reactor Protection System

The RTS automatically prevents operation of the RUS in an unsafe condition by shutting down the RUS whenever predetermined operating limits are approached, or when Design Basis Accident conditions are detected. The operating limits are selected, based on initial conditions (RUS power and outlet temperature) assumed in the safety analysis.

The RTS ensures that RUS heat production does not exceed predetermined levels during abnormal plant conditions, by initiating RUS trip functions. The RTS measures variables, compares these to pre-determined setpoints, and provides actuating signals to the reactor trip breakers whenever the measured variables reach or exceed the setpoints. Each trip breaker has both an under voltage and shunt trip device in order to provide separate means of tripping a breaker from the reactor trip cabinet.

Within each channel, information from the reactor trip cabinet is transmitted via a dedicated intra-channel data network. This network is used to integrate data within a channel and to present it in the Main Station Control Room and in the PEMRR, and on the individual interface and test cabinet maintenance display. A separate inter-channel network is utilized within each of the three channels.

Post-Event Instrumentation System

The PEI display variables are categorized as type A through E in accordance with IEEE Std 497-2002. This classification of variable types is made to distinguish the importance of the displayed information and to specify the requirements which are placed on the instrumentation.

All portions of the PEI that are associated with type A, B and C variables are Class 1E, including the corresponding sensors, hardware equipment, display equipment, and software. The sensors that are associated with type D and E variables are non-Class 1E, and their signals are electrically isolated from the Class 1E PEI hardware. There is one PEI channel associated with type D and E variables identified as channel N.

A dedicated ‘Protection System Display’, independent of the OCS display system, is provided in the Main Station Control Room, the PEMRR, and on the Protection System equipment panels from which Protection System data can be viewed.

Manual Diverse Shutdown System

The MDSS is a hardwired system that enables operators to manually initiate reactor trip, RCS and RSS activation functions, from both the Main Station Control Room and the PEMRR.

The MDSS controls are supported by monitoring instrumentation associated with the PEI system or the Plant Computer displays to provide the operator the capability to know when to take the appropriate manual action.

For each reactor trip function (RS and RSS activation), a set of three switches that are individual and redundant are provided in the Main Station Control Room and a set of three switches that are individual and redundant are provided in the PEMRR. Thus, a total of 4 sets of three switches each comprise the MDSS for the protection system.

4.3 DESIGN DEVELOPMENT NEEDS

Design Development Needs stemming from the NHSS Section are listed in this section.

4.3.1 Reflector Graphite

The PBMR NGNP Core Structure Ceramics (CSC) comprise the non-metallic components enclosed within the core barrel and its underlying support structure, plus the additional non-metallic components that form and support the top reflector assembly. The components of the CSC are principally manufactured from graphite.

Certain components of the CSC, specifically the Reflector Graphite components that are adjacent to or near the core, operate in a harsh environment where they are subjected to high neutron fluences at high temperatures. The reliable operation of the CSC is important for the continued safe and economic operation of the plant as a whole. Thus, the qualification of the CSC, and particularly the Reflector Graphite, for the relevant conditions is of importance.

4.3.1.1 Functions

The key functions of the CSC are as follows:

- Define and maintain the geometry of the core
- Provide for insertion and withdrawal of the control and shutdown systems
- Provide flow paths for the core coolant flow
- Provide for the insertion and removal of fuel elements
- Provide for passive heat removal from the core under accident conditions

4.3.1.2 Key Requirements

The specified service conditions influencing Design Data Needs (DDNs) for the CSC are given below:

- Nominal Reactor Outlet Temperature of 950°C
- Nominal Reactor Inlet Temperature of 350°C
- Nominal Reactor Power level of 500 MWt
- Nominal Helium Pressure of 9 MPa
- Service Life:
  - Non-replaceable components: 60 equivalent full-power years
  - Replaceable components:
    - Minimum: [15] equivalent full-power years

– Target: [20] equivalent full-power years

4.3.1.3 Design Data Needs

The physical design of the CSC for the PMBR NGNP is essentially identical to that of the PBMR Demonstration Power Plant (DPP); however, the operating conditions vary, as the PBMR NGNP has both a lower reactor inlet temperature and high reactor outlet temperature. On that basis, the DDNs for the PBMR NGNP are incremental to those already addressed within the PBMR-Specific Materials Test Reactor Program (PSMP).

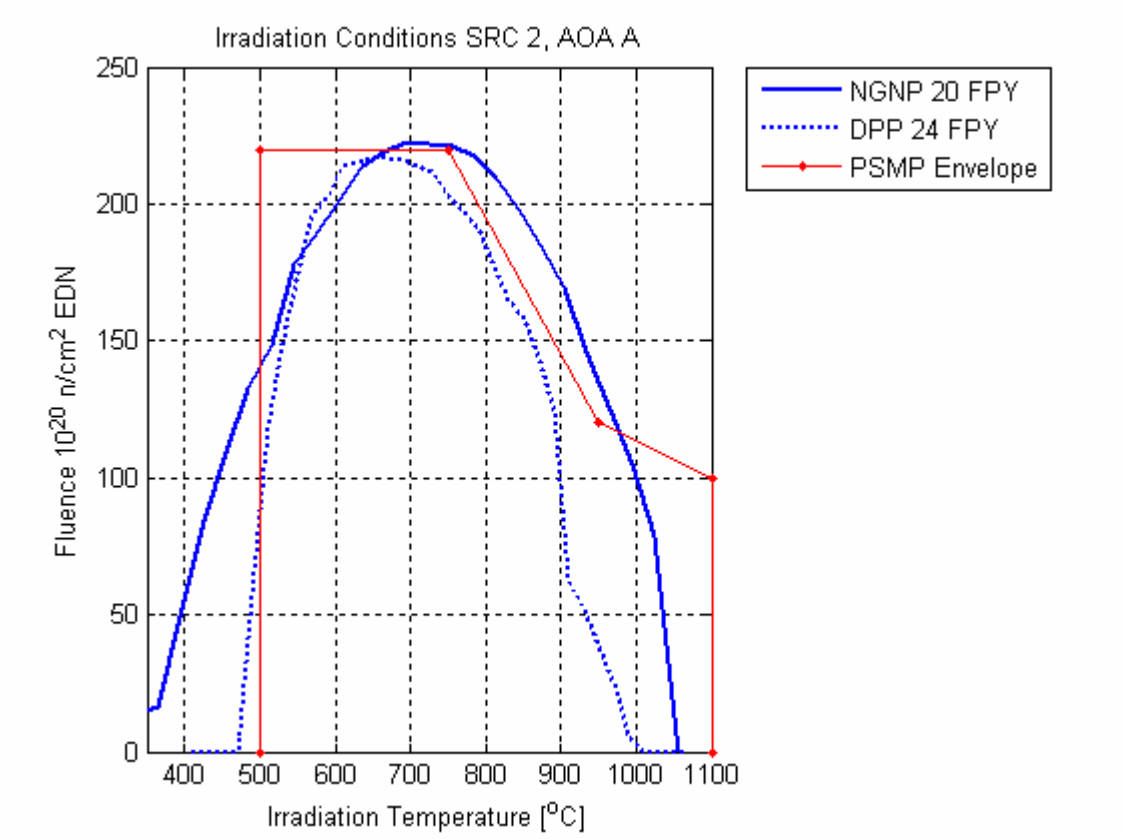

Figure 4.3-1: Irradiation Requirements for NGNP Reflector Graphite

These incremental requirements can be conveniently visualized by referring to Figure 4.3-1:, which provides a comparison of the enveloping fluence-temperature conditions for the PBMR DPP, the PBMR NGNP and the PSMP.

The following should be noted regarding Figure 4.3-1:

- The enveloping conditions apply to only a small fraction of the replaceable reflector graphite that is immediately adjacent to the pebble core. These components have

been given the designation "Structural Reliability Criteria (SRC) 2, Area of Application (AOA) A".

- The NGNP estimates are preliminary and do not have the same detailed basis as the PBMR DPP estimates.

As can been seen in Figure 4.3-1, there are two parts of the PBMR NGNP operating envelope that are not presently addressed by the PSMP. These are in the low-temperature operating range, below about 500 ºC, and in the high-temperature, high-fluence range, above about 750 ºC and 120×10^{20} n/cm^2 EDN, respectively. These areas correspond to the lower reactor inlet temperature and higher reactor outlet temperature of the PBMR NGNP relative to the PBMR DPP.

To accommodate the expanded operating range of the PBMR NGNP, two DDNs have been identified for the Reflector Graphite, addressing the low and high temperature regimes, respectively. These DDNs provide for acquiring the data necessary to achieve a comparable level of qualification for the PBMR NGNP as is presently planned for the PBMR DPP.

DDN NHSS-02-01 EXTENDED PROPERTIES OF IRRADIATED GRAPHITE AT LOW TEMPERATURES

1. Assumptions (to be confirmed by the related R&D program)

The identified DDN is subject to the following assumptions:

- The graphite grade selected for the PBMR NGNP is the same as that for the PBMR DPP
- The PBMR-Specific Materials Test Reactor Program (PSMP) basis established for the graphite structures of the PBMR DPP is also acceptable for the PBMR NGNP, specifically:
  - Confirmation via the PSMP that the materials databases developed for similar graphites in earlier gas-cooled reactor applications can be applied to the PMBR DPP/NGNP graphite
  - The proposed balance between pre-operational experimental assessment of the CSC graphite and post-operational Surveillance, Testing, Inspection and Maintenance (STIM) will be acceptable for the PBMR NGNP as for the PBMR DPP

2. Current Database Summary

Within the PSMP envelope depicted in Figure 4.3-1, the initial design of the PBMR DPP graphite structures is based on historical irradiation test data. This data is summarized and used to generate the model for irradiated properties that is used for the design.

This model will be validated and extended by making use of the material irradiation test data generated as a result of the PSMP.

3. Summary of Data Needed

It can be seen from Figure 4.3-1, that the current PSMP envelope does not sufficiently address the anticipated lower temperatures, below about 500 ºC, at which some of the graphite in the NGNP will be irradiated.

This DDN provides for extending the PSMP envelope by obtaining irradiated properties of the selected grade (or grades) of graphite in the lower temperature range, possibly at 350 ºC. The detailed data requirements should be comparable to those defined in the present PSMP specifications.

4. Designer's Alternatives

The designer's alternatives are:

- Make use of historical data to extend the qualification envelope

- Raise the Reactor Inlet temperature

5. Selected Design Approach and Explanation

The proposed approach is to obtain the data necessary to extend the present PSMP envelope to lower temperatures and, thus, to qualify the Reflector Graphite for NGNP operational conditions. While making use of historical data may be technically possible, it introduces additional licensing risk that can and should be avoided. The alternative of raising the reactor inlet temperature would significantly affect plant performance and, thus, would not be a desirable option.

6. Schedule Requirements

Data supporting initial plant operation is required by mid-2012 to support the NGNP application for a Construction and Operating License (COL). Final data confirming Reflector Graphite target life objectives is required by the end of FY2015 to support plant startup. An early indication of the acceptability of the PSMP qualification basis will be provided by the on-going Design Certification Preapplication Program that is presently underway between PBMR and the U.S. Nuclear Regulatory Commission for the PBMR commercial electricity generation plant. A "white paper" that includes the basis for graphite qualification is planned for the latter half of 2007.

7. Priority

Urgency (1 -5):	1
Cost-Benefit (Low, Medium, High):	High
Uncertainty in Existing Data (Low, Medium, High):	High
Importance of New Data (Low, Medium, High):	High

8. Fallback Position and Consequences Of Non-Execution

As indicated in Item 5 above, there is no acceptable fallback position for the NGNP. The consequences of non-execution might include failure to meet licensing objectives and/or unacceptable operational limitations.

9. References

None

DDN NHSS-02-02 EXTENDED PROPERTIES OF IRRADIATED GRAPHITE AT HIGH TEMPERATURES

1. Assumptions (to be confirmed by the related R&D program)

The identified DDN is subject to the following assumptions:

- The graphite grade selected for the PBMR NGNP is the same as that for the PBMR DPP
- The PBMR-Specific Materials Test Reactor Program (PSMP) basis established for the graphite structures of the PBMR DPP is also acceptable for the PBMR NGNP, specifically:
  - Confirmation via the PSMP that the materials databases developed for similar graphites in earlier gas-cooled reactor applications can be applied to the PMBR DPP/NGNP graphite
  - The proposed balance between pre-operational experimental assessment of the CSC graphite and post-operational surveillance, testing, inspection and maintenance (STIM) will be acceptable for the PBMR NGNP as for the PBMR DPP

2. Current Database Summary

Within the PSMP envelope depicted in Figure 4.3-1, the initial design of the PBMR DPP graphite structures is based on historical irradiation test data. This data is summarized and used to generate the model for irradiated properties that is used for the design.

This model will be validated and extended by making use of the material irradiation test data generated as a result of the PSMP.

3. Summary of Data Needed

It can be seen from Figure 4.3-1, that the current PSMP envelope does not sufficiently address a portion of the temperature-fluence envelope above about 750 ºC and 120×10^{20} n/cm^2 EDN, at which some of the graphite in the NGNP will be irradiated.

This DDN provides for extending the PSMP envelope by obtaining irradiated properties of the selected grade (or grades) of graphite at 950 ºC and at high fluence levels, corresponding to the projected operating conditions of the PBMR NGNP. The detailed data requirements should be comparable to those defined in the present PSMP specifications.

4. Designer's Alternatives

The designer's alternatives are:

- Make use of historical data to extend the qualification envelope
- Lower the Reactor Outlet temperature

- Reduce the Reflector Graphite design life to match the existing envelope

5. Selected Design Approach and Explanation

The proposed approach is to obtain the data necessary to extend the present PSMP envelope to high temperatures and fluence levels and, thus, to qualify the Reflector Graphite for NGNP operational conditions. While making use of historical data may be technically possible, it introduces additional licensing risk that can and should be avoided. The alternative of lowering the reactor outlet temperature would significantly affect plant performance and render some prospective hydrogen production applications untenable. Shortening the Reflector Graphite design life would have significant economic implications.

6. Schedule Requirements

Data supporting initial plant operation is required by mid-2012 to support the NGNP application for a Construction and Operating License (COL). Final data confirming Reflector Graphite target life objectives is required by the end of FY2015 to support plant startup. An early indication of the acceptability of the PSMP qualification basis will be provided by the on-going Design Certification Preapplication Program that is presently underway between PBMR and the U.S. Nuclear Regulatory Commission for the PBMR commercial electricity generation plant. A "white paper" that includes the basis for graphite qualification is planned for the latter half of 2007.

7. Priority

Urgency (1 -5):	1
Cost-Benefit (Low, Medium, High):	High
Uncertainty in Existing Data (Low, Medium, High):	High
Importance of New Data (Low, Medium, High):	High

8. Fallback Position and Consequences Of Non-Execution

As indicated in Item 5 above, there is no acceptable fallback position for the NGNP. The consequences of non-execution might include failure to meet licensing objectives and/or unacceptable operational limitations.

9. References

None

4.4 NHSS COMPLEXITY, RISKS AND FUTURE STUDIES

4.4.1 Complexities and Risks

The higher power levels associated with the NGNP NHSS, which is based on the design of the DPP, present a number of complexities and risks. Higher power output inevitably requires higher component temperatures, higher neutron fluence, higher throughput of fuel spheres through the reactor, higher core outlet temperatures and various other operational requirements, such as the control and shutdown requirements. In order to obtain a higher power level various component designs will have to be investigated. Most of the designs will be evaluated, investigated and with the necessary changes adapted for the higher power levels in the conceptual design phase. Maintenance requirements on components will also have to be evaluated and assessed to assure that the availability target is achieved.

Some components will, however, need more careful consideration than others, and are therefore listed below for future studies.

4.4.2 Future Studies

The future studies on the NHSS are necessitated by the change in configuration from the DPP, as well as the increase in power level.

The future studies can be grouped according to the reason for it, such as the difference between the overall NGNP and DPP configuration, increased neutron flux level, or increase in fuel throughput.

Future studies that are necessitated by the increase in neutron flux or power level are:

CSC Requirements

The effect of the higher power level on the life of the CSC needs to be investigated. It may require more frequent CSC replacements. Thermal stresses in the bottom reflector blocks due to the temperature gradient between the inlet and outlet flow need to be assessed.

The effect of the increased amount of abrasion of the reflectors due to the higher amount of spheres circulated per day also needs further investigation.

Flow Requirements

Assess the stratification in the outlet flow and the effect thereof on the IHX. Assess the flow distribution in the outlet slots due to the changes in the outlet plenum for maldistribution. Assess the effect of the non-symmetrical flow in the riser channels on the temperature distribution of the Side Reflector and CBA. This is due to the lack of riser channels above the outlet pipes. Assess the flow distribution in the outlet slots due to the changes in the outlet

plenum for maldistribution. Assess the sealing of the riser channels in the bottom reflector to limit direct core bypass flow. PLOFC flows need to be assessed to ensure that no hot gas flows down the risers and overheats the RPV. The higher heat loss to the RCCS caused by the higher RPV temperature needs to be considered.

Metallic Structural Requirements

The ASME design codes used for design of the RPV and CBA are written for 40 year plant life. The creep data in the code needs to be extended to 60 years for the NGNP project. The effect of changes in the reactor inlet temperature, on the RPV and CBA due to operational changes in the cycle needs to be assessed. The pressure differential over the CBA (top to bottom) caused by the inlet flow through the restraints needs to be assessed, since it adds downwards force onto the CBA support.

REFERENCES

[4-1] NGNP and Hydrogen Production Preconceptual Design Report, NGNP-20-RPT-002, Special Study 20.2: Prototype Power Level, January 2007
[4-2] ASHRAE 62, Ventilation for Acceptable Indoor Air Quality
[4-3] National Fire Protection Association (NFPA) codes and standards

LIST OF ASSUMPTIONS

4.1 It is assumed that the CCS will consist of a two hundred percent system.

APPENDICES

APPENDIX 4A FINAL DESIGN REVIEW PRESENTATION TO BEA

Section 4
Nuclear Heat Supply System

Michael Correia

Preconceptual Design Report
90% Design Review

May 8-10, 2007

P B M R

Westinghouse NGNP Team

P B M R

Presentation Outline

- Nuclear Heat Supply System Overview
- Reactor Unit System Description
- Main Support and Auxiliary Systems
- Design Data Needs
- Complexities and Risks
- Future Studies
- Summary and Conclusions

Nuclear Heat Supply System Overview

- Consists of all systems in the Nuclear Heat Supply Building
- Reactor Unit System (RUS)
- Fuel (Covered in Section 5)
- Main Support Systems
  - Core Conditioning System (CCS),
  - Fuel Handling and Storage System (FHSS),
  - Helium Services System (HSS),
- Main Auxiliary Systems
  - Reactor Cavity Cooling System (RCCS),
  - NHSS Cooling Water System,
  - NHSS HVAC System,
  - NHSS Electrical System,
  - NHSS Control and Instrumentation System.

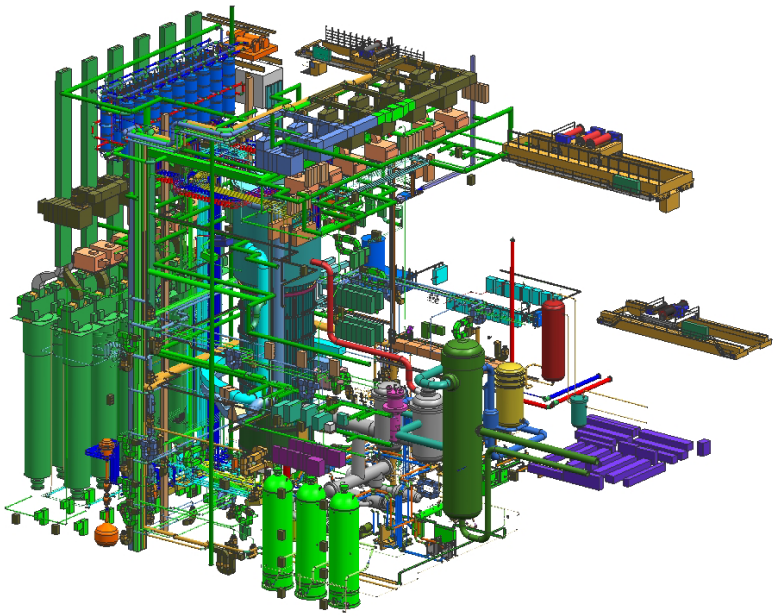

Layout: Reactor Unit System and HTS

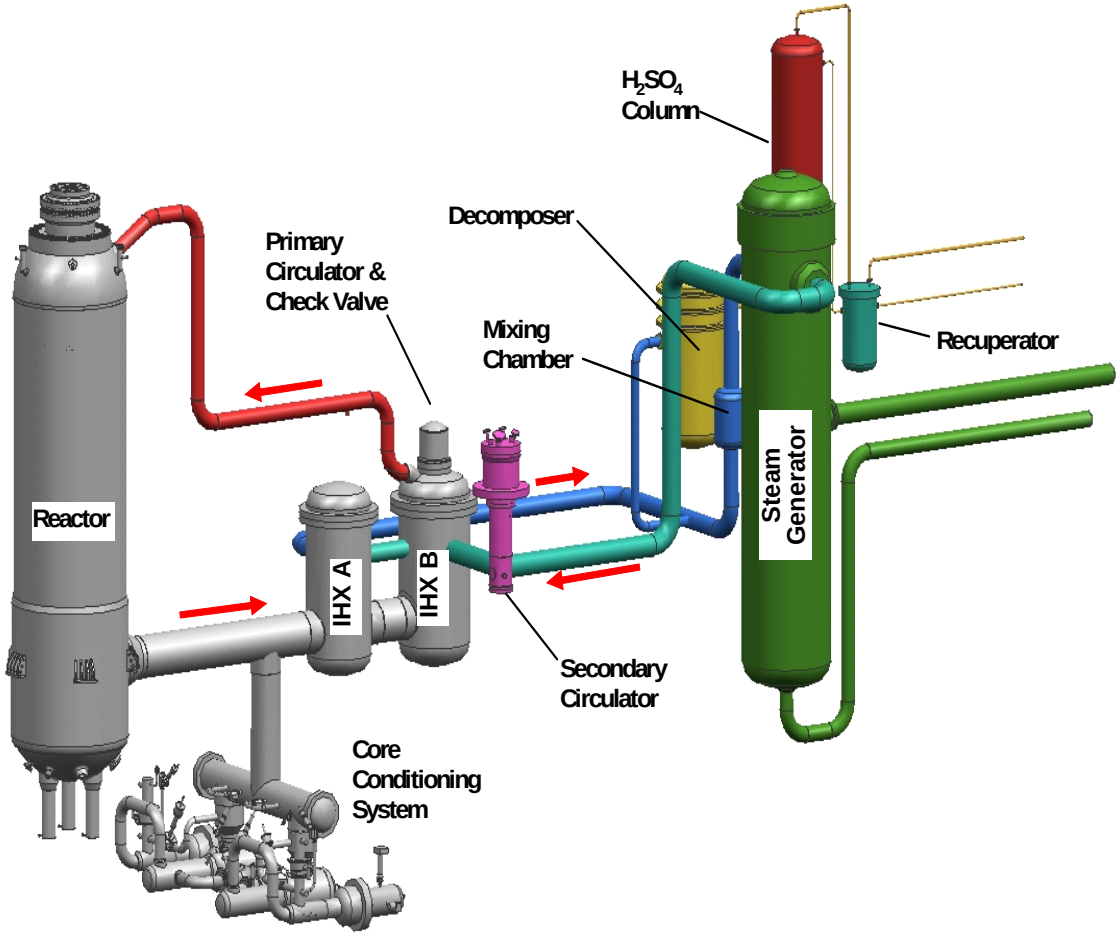

P B M R

Reactor Unit System: Design Inputs

- Special Study 20.2 (Power Level) determined Reactor Parameters
  - Thermal power of 500 MW
  - Reactor outlet temperature: 950°C
  - Reactor inlet temperature: 350°C
  - Helium mass flow rate: ~160 kg/s
  - Nominal Pressure of 9 MPa
- Utilize PBMR-DPP reactor design (same geometry)
  - Benefit of PBMR-DPP design development
  - Minimal design development required
  - Ensures that NGNP schedule is met

Reactor Unit System: Primary Helium Flow Path

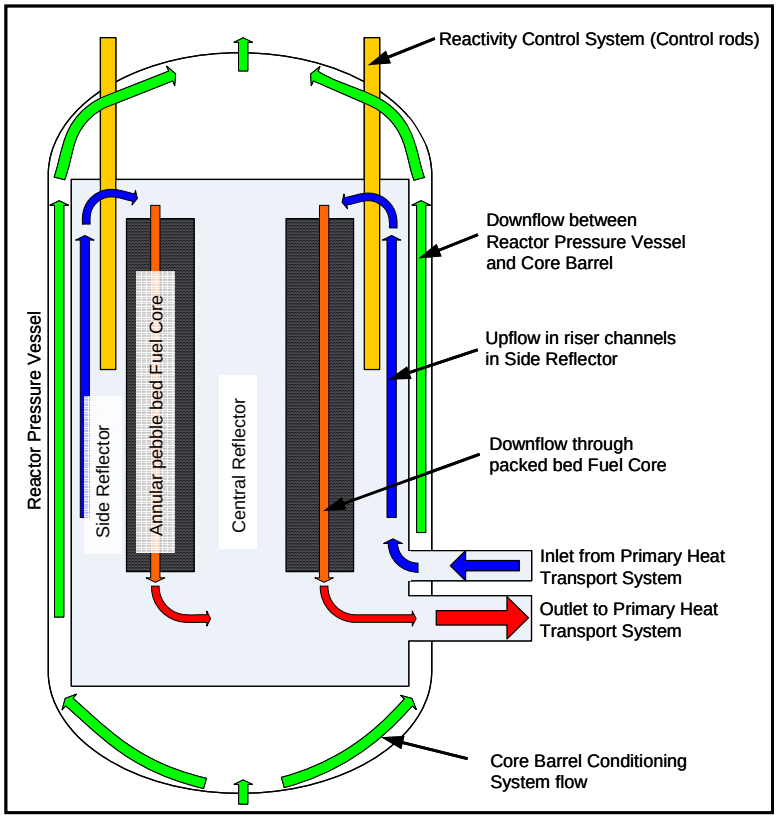

PBMR DPP Flow Path

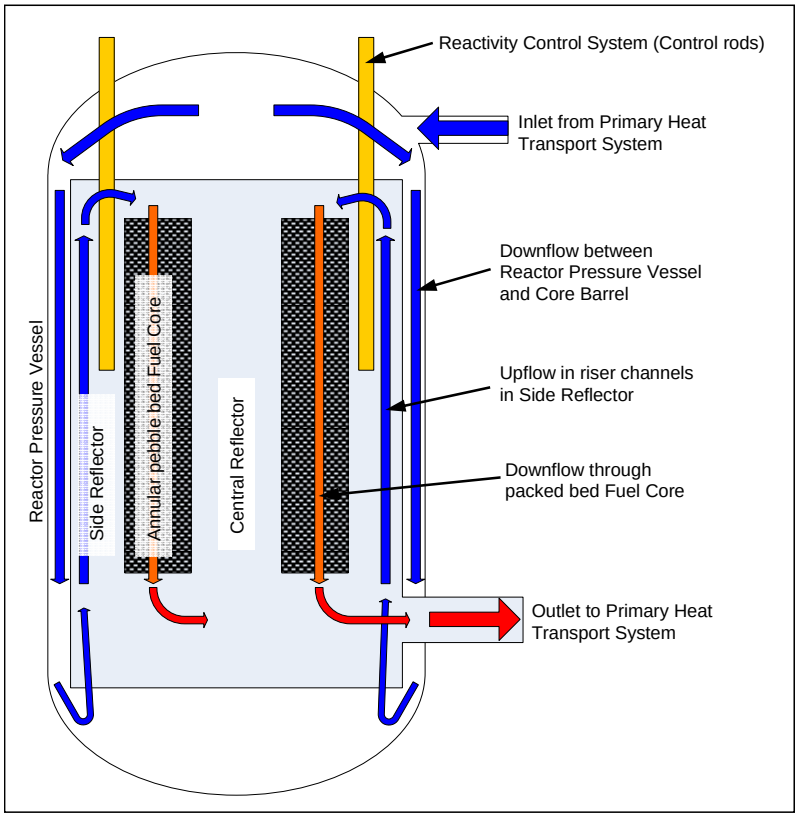

PBMR NGNP Flow Path

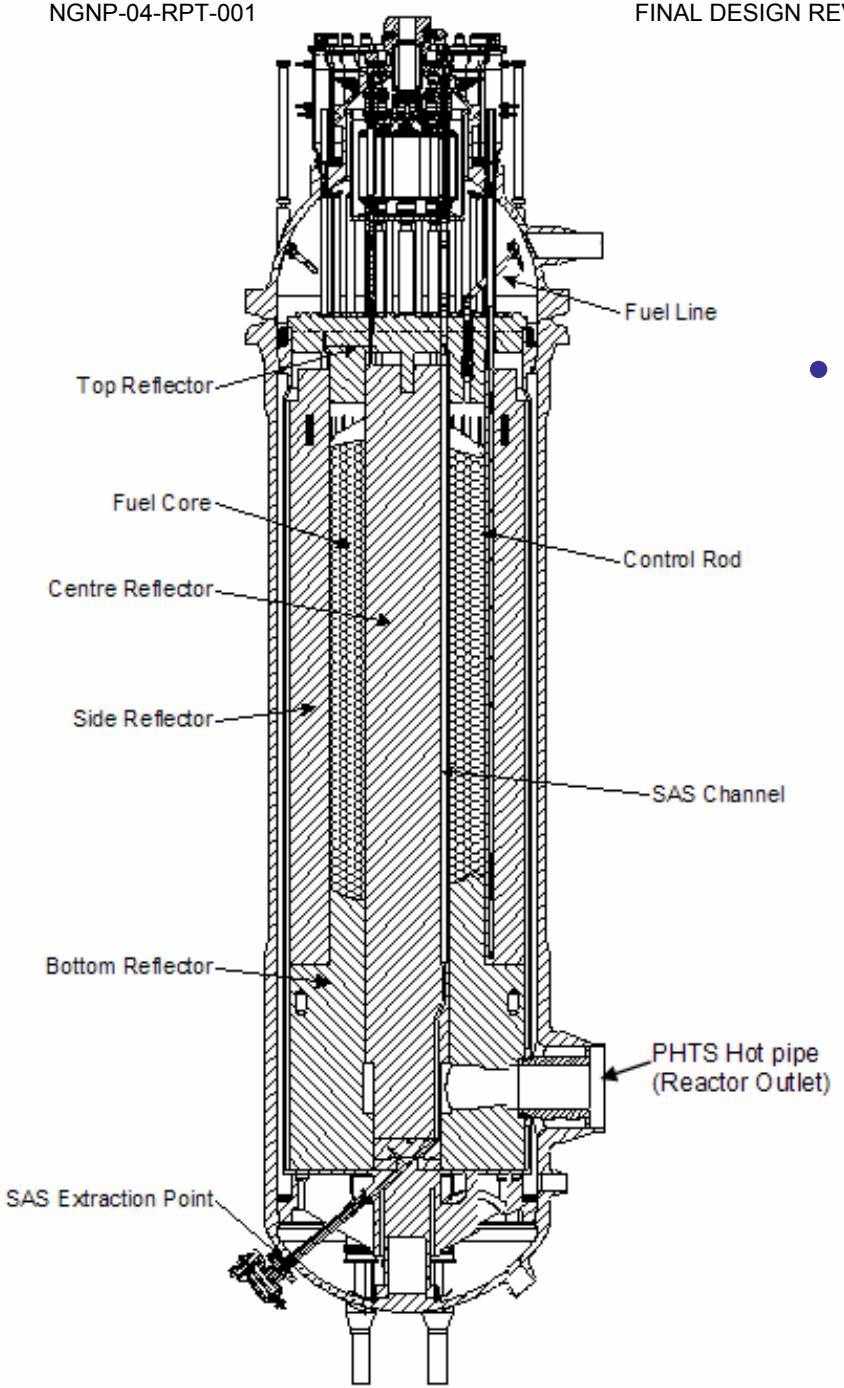

Reactor Unit System: Overview

- Consists of the following sub-systems
  - Core Barrel Assembly,
  - Core Structure Ceramics,
  - Reactor Pressure Vessel,
  - Reactivity Control System,
  - Reserve Shutdown System,
  - In Core Delivery System.

P B M R

Reactor Unit System: Fuel Core

- **Fuel Core**
  - Fuel Core outer diameter 3.7 m
  - Fuel Core inner diameter 2 m
  - Average Fuel Core height 11 m
  - Average packing fraction 61 %
  - Number of fuel spheres in core ~452 000

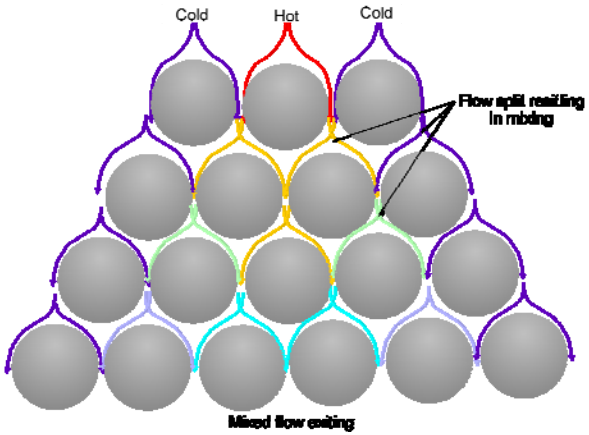

Reactor Unit System: Core Barrel Assembly (CBA)

- **Functions**
  - Support weight and maintain core structure ceramics during seismic and other events
  - Thermal shield for the Reactor Pressure Vessel
  - The CB reduces the gamma ray transmission to the RPV
  - Provide access to the Centre Reflector (CR) during maintenance

- **Description**
  - CBA is situated inside the RPV
  - Diameter: 5.87 m
  - Length: ~23 m
  - Weight: ~350 metric ton.

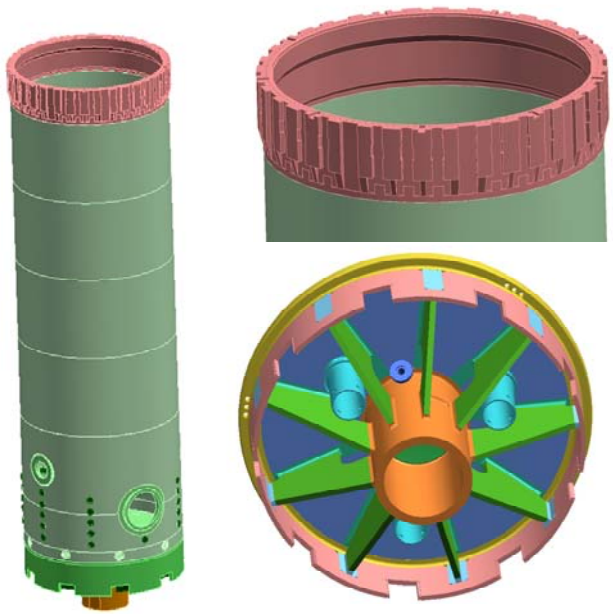

P B M R

Reactor Unit System: Core Structure Ceramics

- **Functions**
  - Form and supports the fuel core
  - Provide neutron reflection
  - Maintain helium flow passage configuration
  - Conduct decay heat during accident events to maintain maximum fuel temperature
- **Description**
  - Located inside CBA
  - Consists of graphite blocks

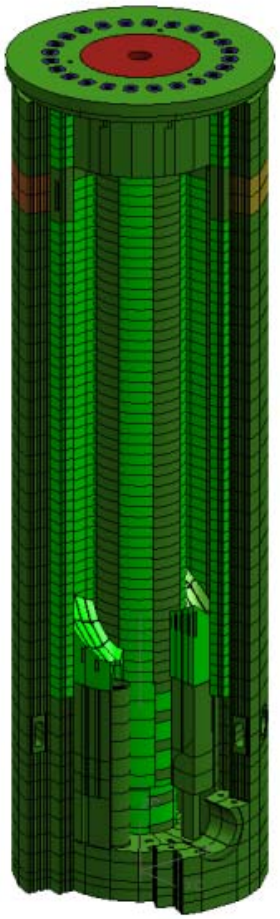

P B M R

Reactor Unit System: Core Structure Ceramics (2)

- **Top Reflector**
  - Suspended from Core Barrel top plate by means of tie-rods
  - Blocks staggered to prevent a direct gap forming from the hot gas in the core to the top plate.
- **Side Reflector**
  - Helium Riser channels & Control Rods
  - Inner Radius of 3.7 m
  - Outer Radius of 5.5 m
- **Fixed Centre Reflector**
  - RSS Channels & In Core Delivery System
  - Outer Radius of 2.0 m
- **Bottom Reflector**
  - Inlet & Outlet plenums, Defueling Chutes

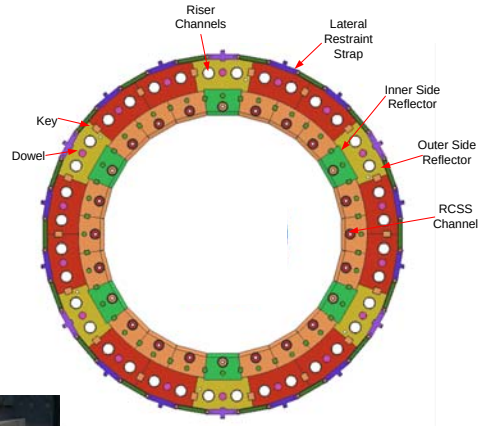

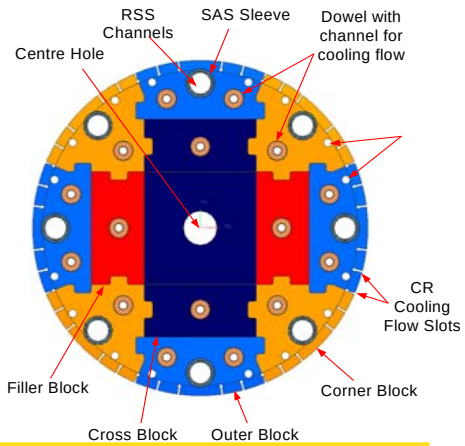

P B M R

Reactor Unit System: Reactor Pressure Vessel

- **Functions**
  - Provide structural support and alignment for the RUS components
  - Transfer decay heat Reactor Cavity Cooling System
  - Containment of the helium inventory at operating pressure
  - Maintaining fuel core geometry under all conditions
- **Description**
  - Plates from SA 533 Grade B Class 1
  - Forgings from SA 508 Grade 3 Class 1
  - External diameter: ~6.8 m
  - Total length is ~30 m.

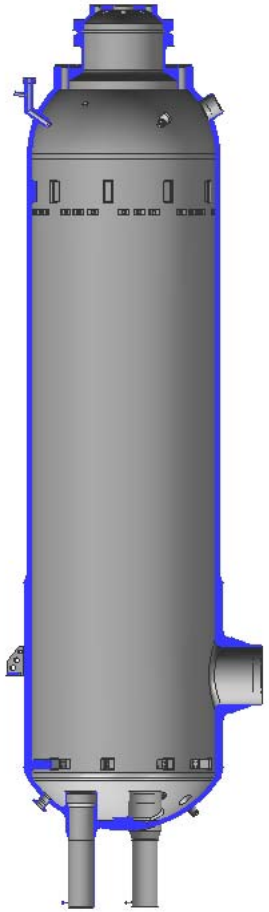

P B M R

Reactor Unit System: Reactivity Control System

- **Function**
  - Regulate neutron absorption from the reactor as a method of reactivity control
- **Description**
  - Consists of 24 identical control rods
  - Contains absorber material in the form of Boron Carbide (B_4C) rings

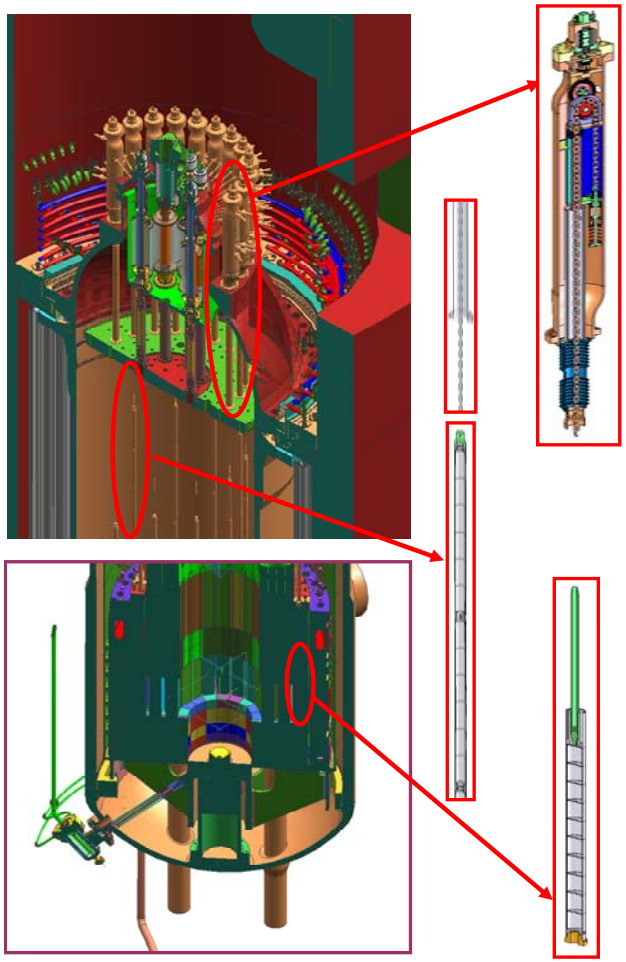

P B M R

Reactor Unit System: Reserve Shutdown System

- **Function**
  - Shut down the Reactor Unit System
- **Description**
  - Small Absorber Spheres (SAS) containing Boron Carbide (B_4C)
  - 8 SAS Containers
  - 8 SAS Channels in Central Reflector
  - SAS transported by use of FHSS Blower

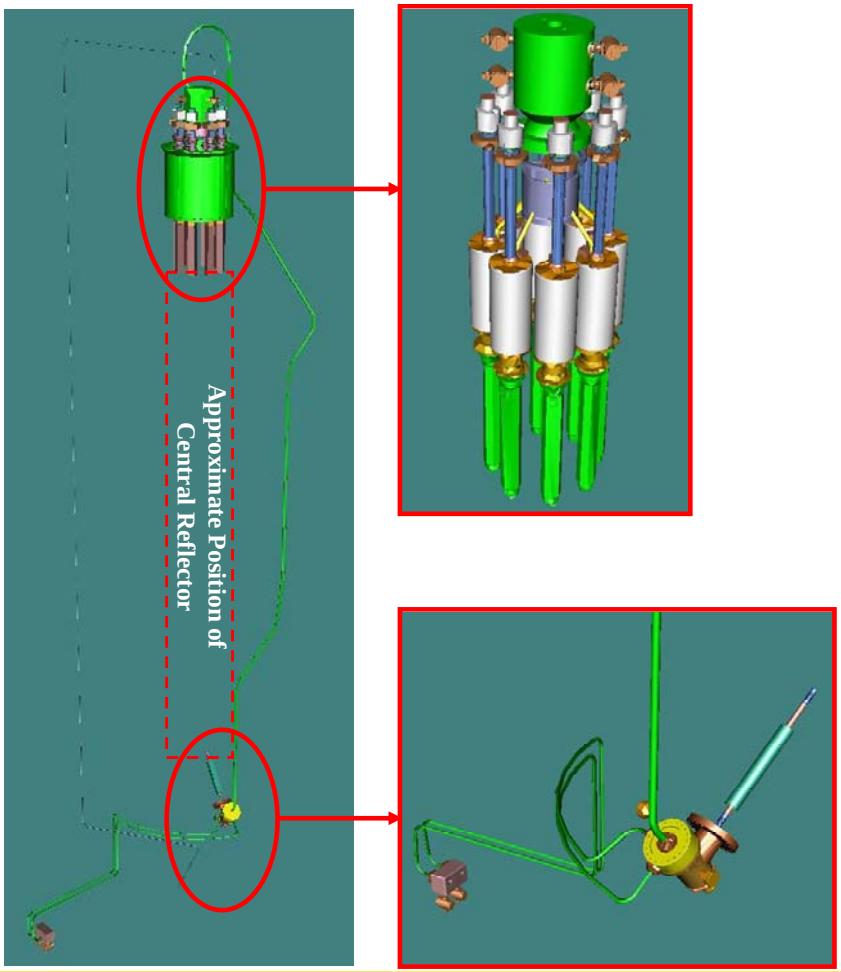

NHSS Main Support Systems: Core Conditioning System

- **Functions**
  - Remove decay heat when HTS is unavailable
  - Remove decay heat during maintenance conditions
  - Provide circulation for Primary Loop Initial Clean-up System operation

- **Description**
  - Consists of 2x100% Systems (TBC)
  - Operates between 0.1 - 9 MPa
  - Heat Removal via Water Heat Exchangers

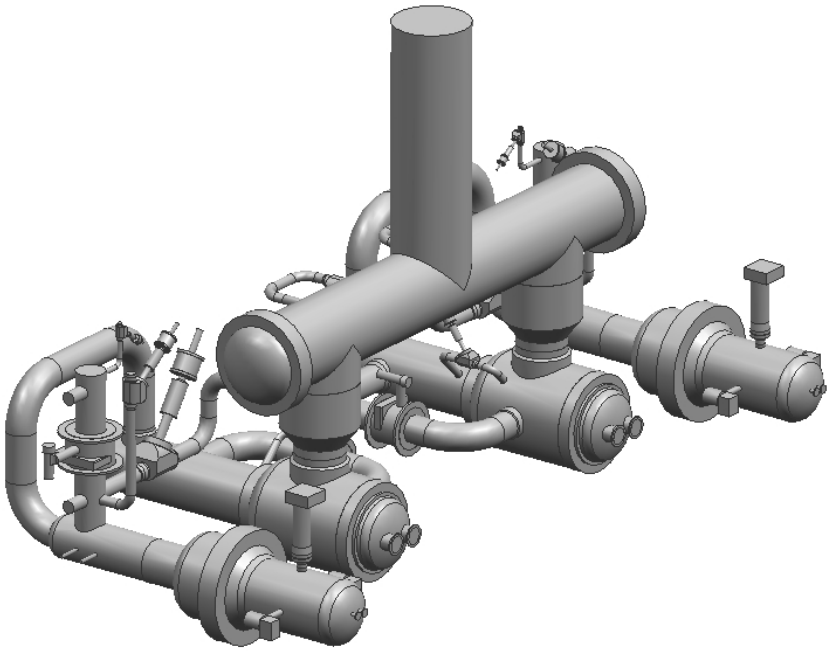

NHSS Main Support Systems: Fuel Handling and Supply System

- **Functions**
  - Initial loading of the fuel core with graphite spheres
  - Circulate fuel and graphite spheres during start-up
  - Circulate fuel spheres during operation
  - Store of fresh and spent fuel elements
  - Monitor and classify fuel elements

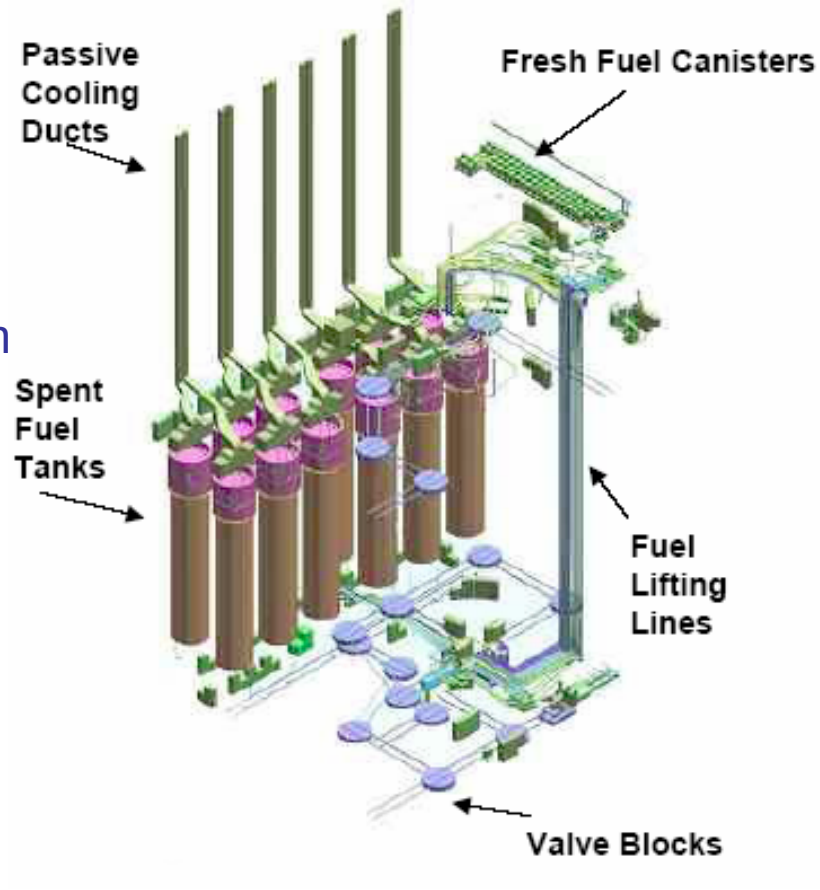

- **Description**
  - Online Refueling
  - Multiple passage (6 times)
  - Spent fuel stored on-site

NHSS Main Support Systems: Proven and Robust FHSS

- PBMR FHSS builds on successful online refueling at AVR and THTR in Germany
- PBMR is testing full scale fuel circulation section of FHSS in HTF Facility (South Africa)
- Most FHSS unplanned upsets can be accessed and repaired with Reactor online
- Reactor can continue to operate at full power with FHSS inoperable for greater than 10 days

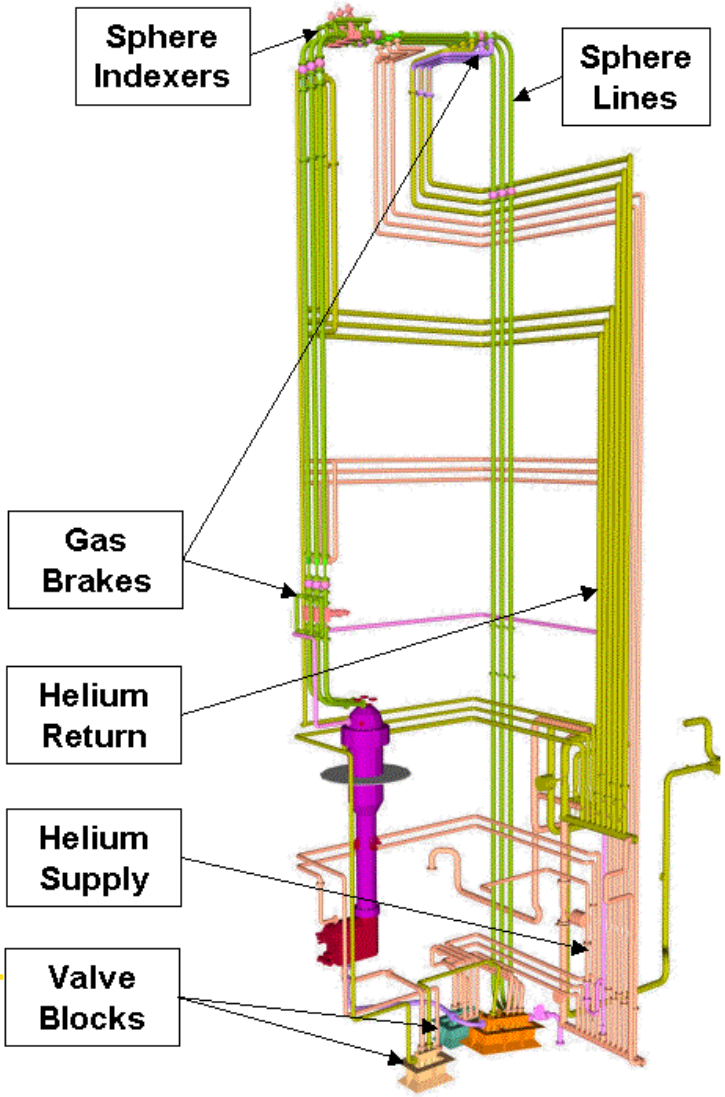

Slide 17

NHSS Main Support Systems: Helium Services System

- **Functions**
  - Inventory Control System:
    - Maintain the helium pressure within NHSS.
    - Provide helium storage during a maintenance outage
  - Helium Purification System:
    - Purify helium
  - Helium Make-up System
    - Provide initial fill and replenish helium
- **Description**
  - Helium transferred through Purification System prior to Storage tanks

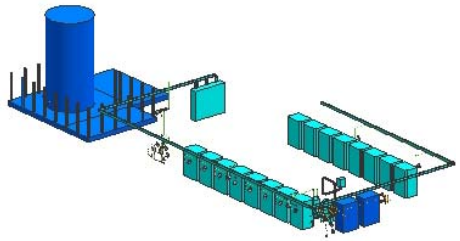

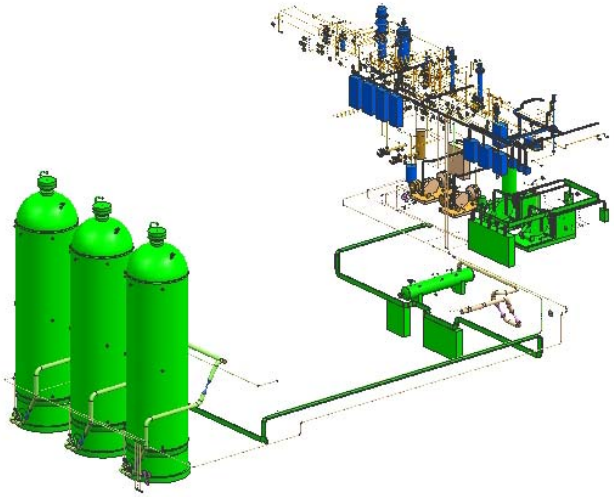

Main Auxiliary Systems: Reactor Cavity Cooling System

- **Function**
  - Heat removal to protect concrete walls in reactor Cavity
- **Description**
  - Consist of 72 oval standpipes
  - Active operation:
    - Water pumped from NHSS Cooling Water System.
  - Passive operation:
    - Water gravitate from storage tanks,
    - Currently designed for unassisted operation of ~72 h,

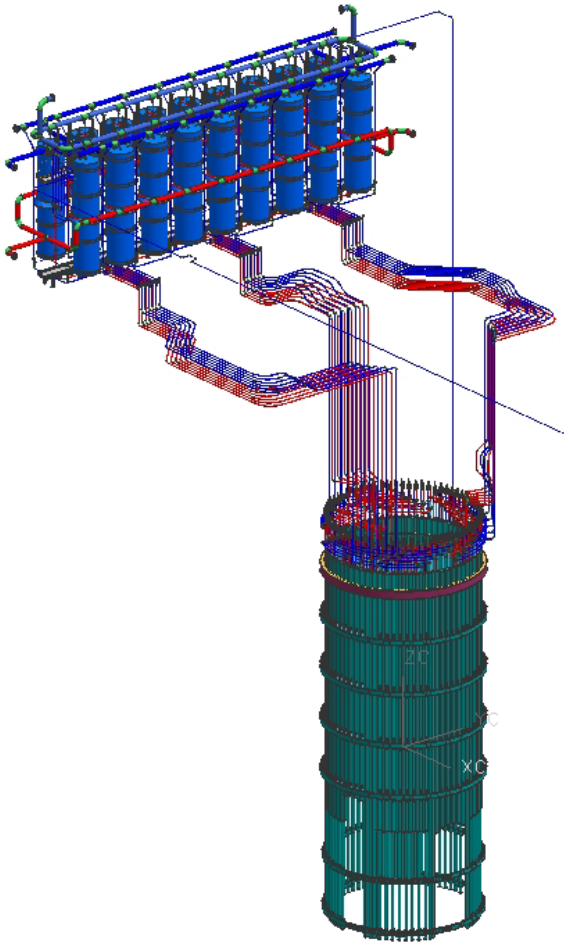

P B M R

Main Auxiliary Systems: NHSS Cooling Water System

- **Function**
  - Provide heat removal for Nuclear Heat Supply Systems to the Component Cooling Water System (BOP)

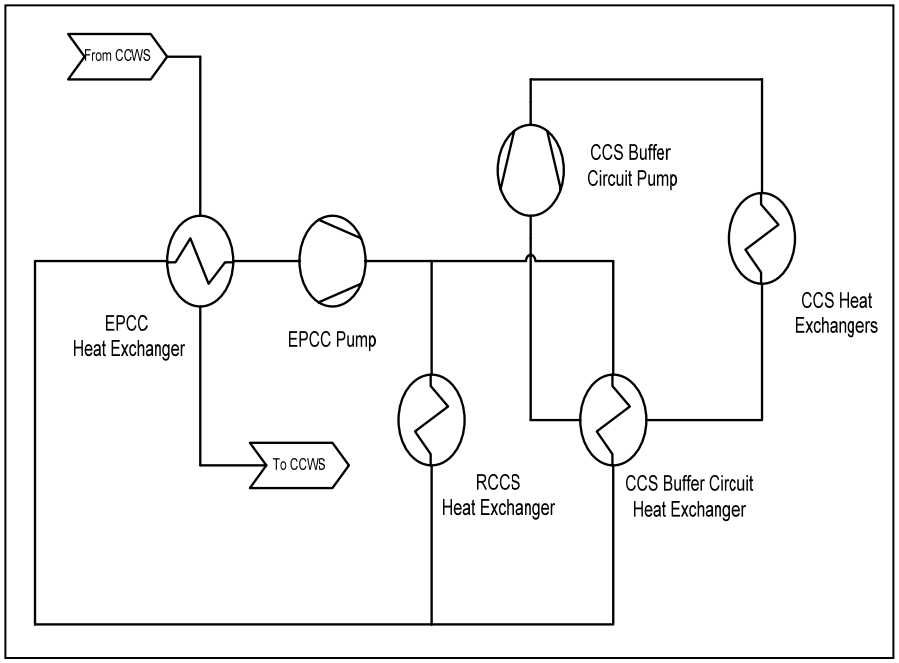

Equipment Protection Cooling Circuit

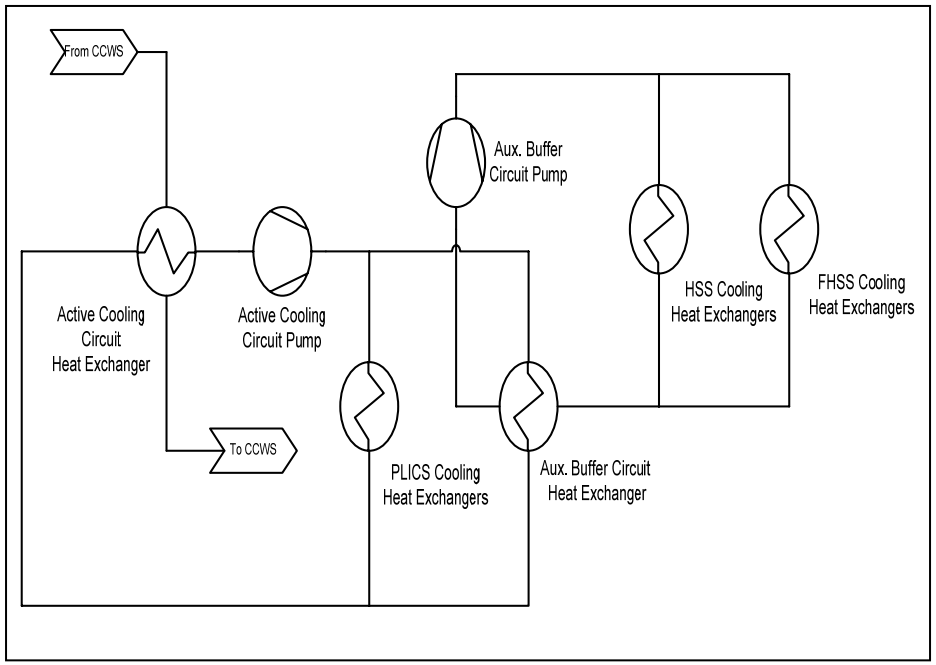

Auxiliary Cooling Circuit

P B M R

Main Auxiliary Systems: NHSS Control and Instrumentation System

- **Operational Control System (OCS)**
  - Provide operational control
  - Closely integrated with Central Control & Supervisory System (BOP)
- **Equipment Protection System (EPS)**
  - Reduce the risk of financial loss due to OCS control failure
  - Highly reliable system
- **Reactor Protection System (RPS)**
  - Providing Automatic Reactor Protection
  - Enabling Manual Reactor Trip Initiation
  - Providing Post-Event Information to the Operator
  - Performing Operational Verification
  - Providing for Periodic Testing and Maintenance

P B M R

Main Auxiliary Systems: NHSS Electrical Systems & NHSS HVAC

- **NHSS Electrical Systems**
  - Provide electrical distribution from Balance Of Plant electrical supply for NHSS
  - Provide Power Supply to the Reactor Protection System and Post-event Instrumentation (PEI) during and following Design Basis Accidents

- **NHSS HVAC Systems**
  - Maintain comfort levels for operating and maintenance personnel
  - Ventilation for processes and equipment
  - Prevent contamination migration through pressure differentials between rooms
  - Provide adequate filtration of exhaust streams to prevent release of any contaminants into the atmosphere.
  - Provide smoke removal capability
  - Provide adequate isolation capability

P B M R

Design Development Needs

- **PBMR DPP has an extensive Technology Development program**

- **NGNP Design Data Needs incremental to PBMR DPP Development**

REFLECTOR GRAPHITE

DDN NHSS-01-01

Extended properties of irradiated graphite at low temperature

DDN NHSS-01-02

Extended properties of irradiated graphite at high temperature

P B M R

NHSS Complexity and Risks

- **Higher Power Level**
  - Effect on Graphite, CCS, RCCS and FHSS to be investigated
- **NGNP 60 year lifetime**
  - ASME design codes used for RPV and CBA are written for 40 year
  - Require more frequent Graphite Replacements

P B M R

NHSS Future Studies

- **NHSS Configuration**
  - Core Conditioning System size, redundancy, and independence
  - Need for tritium and other cleanup systems for SHTS
- **Requirements on Core Structure Ceramics**
  - Investigate life of the CSC due to higher power level
  - Assess thermal stresses in bottom reflector blocks due the temperature gradient between the inlet and outlet flow
- **Metallic structural requirements**
  - Assess effect of reactor inlet temperature changes on the RPV and CBA due to operational changes.
  - Assess additional forces on CBA due to downward flow between RPV and CBA

P B M R

Summary and Conclusions

- NGNP can benefit from PBMR-DPP design development
- Effect of higher power level and change to reactor inlet flow to be further evaluated
- Reactor normal operating parameters:
  - Thermal power of 500 MW
  - Reactor outlet temperature of 950°C
  - Reactor inlet temperature of 350°C
  - Helium mass flow rate: ~160 kg/s
  - Nominal Pressure of 9 MPa
- Incremental Graphite Reflector irradiation information required

NGNP-05-RPT-001 **May 2007**
Revision 0

NGNP and Hydrogen Production Preconceptual Design Report

SECTION 5: REACTOR FUEL

Revision 0

APPROVALS

Function	Printed Name and Signature	Date
Author	Johan Markgraaff M-Tech Industrial	May 18, 2007
Reviewer	Jan van Ravenswaay M-Tech Industrial	May 18, 2007
Approval	Michael Correia Pebble Bed Modular Reactor (Pty) Ltd	May 18, 2007

Westinghouse Electric Company LLC
Nuclear Power Plants
Post Office Box 355
Pittsburgh, PA 15230-0355

©2007 Westinghouse Electric Company LLC
All Rights Reserved

LIST OF CONTRIBUTORS

Name and Organization	Date
Norman P. Jacob Nuclear Fuel Services	May 2007
Christopher A. Pendleton Nuclear Fuel Services	May 2007
Stephen M. Schutt Nuclear Fuel Services	May 2007
Stanley Ritterbusch Westinghouse	May 2007
David Cliff Westinghouse	May 2007
Kobus van der Merwe M-Tech Industrial	May 2007
Michael Correia Pebble Bed Modular Reactor (Pty) Ltd	May 2007

BACKGROUND INTELLECTUAL PROPERTY

Section	Title	Description
NONE		NONE

REVISION HISTORY

RECORD OF CHANGES

Revision No.	Revision Made by	Description	Date
0	Johan Markgraaff M-Tech Industrial	Initial Issue	May 18, 2007

DOCUMENT TRACEABILITY

Created to support the following Document(s)	Document Number	Revision
NGNP and Hydrogen Production Preconceptual Design Report	NGNP-01-RPT-001	0

TABLE OF CONTENTS

LIST OF TABLES **5-6**

LIST OF FIGURES **5-7**

5 REACTOR FUEL **5-8**

SUMMARY AND CONCLUSIONS **5-8**

INTRODUCTION **5-9**

5.1 FUEL OVERVIEW **5-10**

5.2 FUEL SYSTEM **5-11**

5.2.1 SYSTEM FUNCTIONS AND REQUIREMENTS **5-11**

5.2.1.1 FUEL MATRIX AND FUEL-FREE GRAPHITE ZONES **5-11**

5.2.1.2 FUEL PARTICLE FUNCTIONS **5-11**

5.2.1.2.1 FUEL KERNEL 5-12

5.2.1.2.2 BUFFER LAYER 5-12

5.2.1.2.3 INNER PYC LAYER 5-12

5.2.1.2.4 SIC LAYER 5-12

5.2.1.2.5 OUTER PYC LAYER 5-13

5.2.2 SYSTEM DESCRIPTION **5-13**

5.2.2.1 FUEL PARTICLE DESIGN **5-13**

5.2.2.1.1 KERNEL 5-13

5.2.2.1.2 BUFFER LAYER 5-13

5.2.2.1.3 INNER PYROCARBON LAYER 5-14

5.2.2.1.4 SILICON CARBIDE LAYER 5-14

5.2.2.1.5 OUTER PYROCARBON LAYER 5-15

5.2.2.1.6 OVERCOATING 5-15

5.2.2.2 FUEL ELEMENT DESIGN **5-15**

5.2.3 INTERFACES **5-16**

5.2.4 TESTING, QUALIFICATION AND OPERATION **5-16**

5.2.4.1 INTRODUCTION **5-16**

5.2.4.2 TESTING AND QUALIFICATION **5-17**

5.2.4.2.1 GENERAL TEST PROGRAM APPROACH 5-18

5.2.4.2.2 METHODOLOGY 5-18

5.2.4.2.3 CONCEPTUAL REVIEW CONCLUSIONS 5-19

5.2.4.2.4 PBMR FUEL IRRADIATION PROGRAM 5-21

5.2.4.2.5 NORMAL OPERATION AND ACCIDENT CONDITIONS TESTING AND QUALIFICATION 5-22

5.2.4.2.6 FUEL MANUFACTURING 5-25

5.2.4.2.7 CONCLUSION 5-25

5.2.5 FUEL SUPPLY AND FABRICATION **5-25**

5.2.5.1 SUPPLIERS **5-25**

5.2.5.1.1 INTRODUCTION 5-25

5.2.5.1.2 NEAR TERM FUEL SUPPLY AND RISK REDUCTION 5-26

5.2.5.1.3 STARTUP TO EQUILIBRIUM CORE SUPPLY 5-26

5.2.5.1.4 INTEGRATED FUEL SUPPLY PROGRAM....5-27
5.2.5.2 FUEL FABRICATION....5-29
5.2.5.3 SHIPPING / TRANSPORTATION....5-31
5.2.5.3.1 DELIVERY AND TRANSPORTATION OF FRESH FUEL....5-31
5.2.5.3.2 FUNDAMENTAL SAFETY DESIGN AND TRANSPORT PHILOSOPHY....5-31
5.2.5.3.3 LICENSING STRATEGY FOR THE FRESH FUEL CONTAINER....5-32
5.2.5.3.4 FRESH FUEL TRANSPORT CONTAINER UTILIZATION....5-34
5.2.6 WASTE MANAGEMENT AND RECYCLING....5-34
5.2.6.1 WASTE IDENTIFICATION....5-34
5.2.6.1.1 FUEL MANUFACTURING....5-34
5.2.6.1.2 DECOMMISSIONING WASTE....5-35
5.2.6.2 FUEL WASTE MANAGEMENT....5-35
5.2.6.3 LONG TERM STORAGE....5-35
5.3 FUEL DESIGN DEVELOPMENT NEEDS....5-39
5.3.1 FUEL....5-39
5.3.1.1 FUNCTIONS....5-39
5.3.1.2 KEY REQUIREMENTS....5-39
5.3.1.3 DESIGN DATA NEEDS....5-39
5.3.1.3.1 FUEL IRRADIATION TESTS FOR NORMAL OPERATIONAL CONDITIONS (DDN NHSS-01-01)....5-40
5.3.1.3.2 FUEL HEATING TESTS FOR ACCIDENT CONDITIONS (DDN NHSS-01-02)....5-42
5.3.1.3.3 FUEL GRAPHITE IRRADIATION TESTS (DDN NHSS-01-03)....5-44
5.4 FUEL COMPLEXITY, RISKS AND FUTURE STUDIES....5-46
5.4.1 COMPLEXITY AND RISKS....5-46
5.4.2 FUTURE STUDIES....5-47
REFERENCES....5-48
LIST OF ASSUMPTIONS....5-49
APPENDICES....5-50
APPENDIX 5A FINAL DESIGN REVIEW PRESENTATION TO BEA....5-50

LIST OF TABLES

Table 5.2-1: Normal Operation Maximum Irradiation Requirements for PBMR DPP Fuel.... 5-18
Table 5.2-2: DLOFC and PLOFC Maximum Temperature Requirements for PBMR DPP Fuel 5-19
Table 5.2-3: Irradiation Detail for German LEU-TRISO Irradiation Tests..... 5-20
Table 5.2-4: Irradiation Detail for German LEU-TRISO Irradiation Tests..... 5-20
Table 5.2-5: Neutronic and Thermal-hydraulic Parameter Comparison between PBMR DPP and NGNP..... 5-21
Table 5.3-1: NGNP Fuel Normal Operation Fuel Irradiation Requirements..... 5-41

LIST OF FIGURES

Figure 5.1-1: Diagram of the General Layout of the PBMR Fuel Sphere Design..... 5-10
Figure 5.2-1: Comparison of PBMR & NGNP Fast Neutron Dose and Temperature Requirements with the German Experience Database..... 5-22
Figure 5.2-2: Comparison of PBMR & NGNP Burnup and Fuel Temperature Requirements with the German Experience Database..... 5-23
Figure 5.2-3: Comparison of PBMR & NGNP Fast Neutron Dose and Burn-up Requirements with the German Experience Database..... 5-24
Figure 5.2-4: Cs137 Release Fractions at 1600°C and 1800°C..... 5-24
Figure 5.2-5: Diagram of the General NGNP Start-up to Equilibrium Fuel Sphere Loading 5-27
Figure 5.2-6: Proposed Program for the NGNP Fuel Supply 5-28
Figure 5.2-7: PBMR Fuel Sphere Fabrication Process Overview 5-29
Figure 5.2-8: Fresh Fuel Container Licensing Strategy..... 5-33
Figure 5.2-9: Preconceptual Arrangement of PBMR Spent Fuel Tanks 5-36
Figure 5.2-10: Typical Storage Tank Cross-Sectional Geometry..... 5-37
Figure 5.2-11: SSS Cooling Mode Mapping 5-38

5 REACTOR FUEL

SUMMARY AND CONCLUSIONS

In this section, the applicability of Pebble Bed Modular Reactor (PBMR) fuel is discussed in view of the power level requirements as envisaged for the Next Generation Nuclear Plant (NGNP), and as calculated/established during foregoing preconceptual design efforts. A fuel supply approach is presented which would utilize PBMR fuel to meet the requirements of the NGNP.

In light of the above-mentioned the following aspects are reviewed:

- Fuel system
- Fuel system functions and requirements
- Fuel system description
- Fuel interfaces
- Fuel testing, qualification and operation
- Fuel supply and manufacturing
- Waste management and recycling
- Fuel design development needs
- Future studies

The PBMR program, upon completion of the current fuel development for the PBMR Demonstration Power Plant (DPP), will provide a strong assurance for a reliable fuel supply. The current PBMR program is planned to assure that the fuel will match the excellent performance that was demonstrated in the German reactor programs through the 1980s.

In parallel with the PBMR base development program, some additional testing of PBMR fuel will be required to meet the higher operating fluence and accident temperatures predicted for the NGNP. The development program would be carried out on standard PBMR fuel under conditions above those applicable for the DPP. The goals would be to extend the fluence and temperature range of the demonstrated performance and to improve the statistical basis for predicting radionuclide retention during postulated accident events.

INTRODUCTION

The PBMR DPP operates at 400 MWt with a reactor inlet temperature of 500ºC and a reactor outlet temperature of 900ºC. As part of the first phase of the NGNP preconceptual design a power level Special Study was performed to determine the optimum power level for the NGNP. It was concluded that the optimum power level for the NGNP is 500 MWt with a reactor inlet temperature of 350ºC and a reactor outlet temperature of 950ºC. The power level was evaluated against discriminating criteria that included Readiness in terms of research and development requirements on schedule, performance and cost. In this study, fuel performance for normal operation as well as fuel performance during PLOFC (pressurized loss of forced cooling) and DLOFC (de-pressurized loss of forced cooling) conditions were evaluated. The selected power level was chosen, since it builds on the PBMR DPP reactor and fuel technology, it can meet the NGNP schedule, it requires no design development, higher power levels can be achieved at the same cost and minimal fuel qualification would be required.

Since NGNP requirements as far as operating temperatures, and thus, fuel temperatures are higher than that of the German test program (please refer to Section 5.2.4.2.5.1), it is foreseen that more testing will be required. However, tests will be based on the strategy presented below as part of the PBMR preparation for the DPP.

The strategy being followed by PBMR can be presented as follows:

- Testing and Qualification
  - PBMR fuel irradiation program
    - Normal operation testing and qualification
    - Enveloping normal operation
    - Fast neutron dose and burn-up during normal operation

  - Accident conditions testing and qualification
    - Accident conditions
    - Fission product source term testing and qualification

Even though future testing and qualification are being performed for the PBMR, this is only to verify and validate test result data from the German program.

All acronyms are defined in PCDR Appendix A.

5.1 FUEL OVERVIEW

The PBMR fuel core consists of fuel elements that contain uranium which generates heat by means of fission reactions. The fuel element, known as a fuel sphere, consists of a matrix graphite body pressed into a spherical shape. A fuel sphere is divided into two regions. The inner spherical region is known as the fuel region, while an outer shell surrounding the fuel region is known as the fuel-free region. The fuel region of each fuel sphere contains a approximately 14,500 of evenly dispersed spherical particles known as coated particles, in which the fuel is contained, while there are no coated particles in the fuel-free region.

Each coated particle consists of a spherical kernel of uranium dioxide (UO_2) surrounded by four coating layers. The innermost coating layer is known as the buffer layer and it is followed in turn by a pyrocarbon layer known as the inner pyrocarbon (IPyC) layer, a silicon carbide (SiC) layer, and another pyrocarbon layer known as the outer pyrocarbon (OPyC) layer. This coated particle design is known as the TRISO design.

The general design layout of the PBMR NGNP fuel sphere is presented in Figure 5.1-1

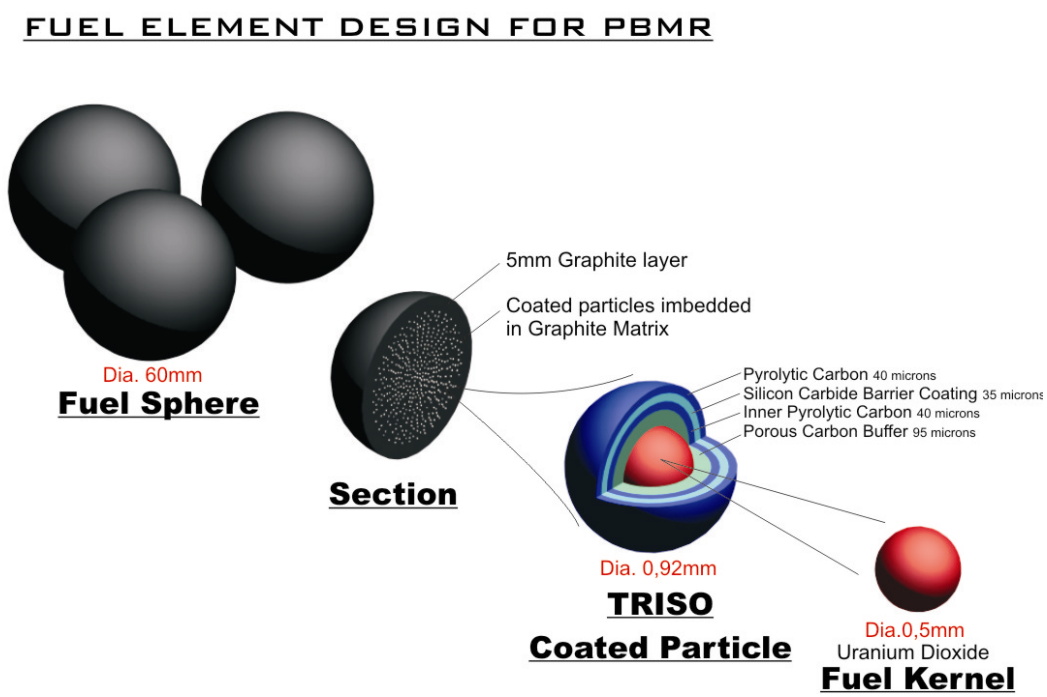

Figure 5.1-1: Diagram of the General Layout of the PBMR Fuel Sphere Design

The fuel provides the primary barrier against the release of fission products. This section shows the ability of the fuel to provide sufficient retention for the conditions expected in the fuel core during normal operation and credible accidents as calculated by the nuclear and thermodynamic design.

5.2 FUEL SYSTEM

5.2.1 System Functions and Requirements

The following requirements must be met by the Fuel System:

- Mechanical and physical integrity/durability sufficient to withstand process conditions expected for the NGNP reactor to ensure the following:
  - Confinement of radioactive materials and control of operational discharges, as well as the limiting of accidental radioactive releases.
  - Control of reactivity.

To satisfy all the requirements presented above, the functions presented by the following subsections are assigned to each component of the fuel system as presented in Figure 5.1-1.

5.2.1.1 Fuel Matrix and Fuel-free Graphite Zones

The fuel matrix and fuel-free graphite zones function as the containment regions for fuel particles, which also protects the particles form mechanical damage during transport from fuel manufacturing facilities, as well as fueling and de-fueling of the reactor over its entire life cycle. It also provides a heat conduction path between the coated particles and the reactor coolant (helium). The fuel matrix and fuel-free zones also provide containment of some fission products during up-set conditions and acts as the moderator for neutrons in the fuel core of the Reactor Unit System.

5.2.1.2 Fuel Particle Functions

The properties or functions of Low Enriched Uranium (LEU)-TRISO coated particles are among the most important factors determining the radiological safety of the PBMR. This is because fission product retention in fuel spheres, and the fuel temperatures that can be tolerated in the reactor core, are determined by coated particle properties. The components of the fuel particle have certain process design functions which can be broken down into the following sub-sections.

5.2.1.2.1 Fuel Kernel

The functions of the fuel kernel are to:

- Produce power by means of fission reactions.
- Control the internal pressure within a coated particle by retention of gaseous fission products and by minimizing the formation of carbon monoxide (CO) from free oxygen in the kernel.
- Tie up rare earth fission products as immobile oxides to limit their migration to, and through the coating layers.

5.2.1.2.2 Buffer Layer

The functions of the buffer layer are to:

- Prevent damage to the inner PyC layer by fission product recoiling from fission reactions near the surface of the kernel.
- Provide void volume for gaseous fission products released from the kernel to control the internal pressure in a coated particle.

5.2.1.2.3 Inner PyC Layer

The inner PyC layer:

- Protects the kernel from chlorine in the form of hydrochloric acid (HCl) that is generated during application of the SiC layer.
- Provides a smooth surface for SiC deposition.
- Delays the transport of metallic fission products to the SiC layer while it acts as an impenetrable barrier to the transport of gaseous fission products and CO formed in the buffer layer.
- In interaction with the SiC layer and the outer PyC layer, keeps the SiC layer under compressive stress during irradiation.

5.2.1.2.4 SiC Layer

The SiC layer has two major functions:

- It provides the structural support to accommodate the internal gas pressure in a coated particle.
- It is the primary fission product barrier in the coated particle and retains fission products.

5.2.1.2.5 Outer PyC Layer

The outer PyC layer is the final layer of the coated particle and it:

- Protects the SiC layer during handling prior to fuel sphere fabrication.
- Provides some protection to the SiC layer from external chemical reactions.
- Acts as a final barrier to the release of gaseous fission products.
- In interaction with the SiC layer and the inner PyC layer, keeps the SiC layer under compressive stress during irradiation.

5.2.2 System Description

The fuel core consists of fuel elements containing uranium that generates heat by means of fission reactions. The fuel element, known as a fuel sphere, consists of a matrix graphite body pressed into a spherical shape. A fuel sphere is divided into two regions; the inner spherical fuel region and fuel-free region. The fuel region of each fuel sphere contains a large number of evenly dispersed spherical particles known as coated particles in which the fuel is contained while there are no coated particles in the fuel-free region.

5.2.2.1 Fuel Particle Design

Fuel particles contained in the fuel matrix consist of several components as presented in Figure 5.1-1. Descriptions of these components are presented in the following sub-sections.

5.2.2.1.1 Kernel

The spherical fuel kernel consists of stoichiometric uranium dioxide (UO_2). The kernels have a diameter of approximately 500 µm and a density greater than approximately 10.4 gm/cm^3. The U_{235} enrichment of the particles is approximately 4.2% for startup fuel and 9.6% for equilibrium fuel. The basic manufacturing steps for the kernel are as follows. U_3O_8 powder is dissolved in nitric acid to form uranyl nitrate. The solution is neutralized with ammonia and allowed to flow through an oscillating nozzle to produce spherical droplets. As the droplets fall through a gaseous ammonia atmosphere, the spherical outer surface of the droplet gels. The particles fall into an aqueous ammonia solution where they solidify into ammonium uranate. They are then aged and washed to remove ammonium nitrate and organic additives, dried, and calcined. The dry kernels are reduced to UO_2 in hydrogen and sintered, and are then ready to be coated.

5.2.2.1.2 Buffer Layer

The first layer in contact with the kernel is known as the buffer layer, the purpose of which it is deposited from acetylene (C_2H_2) in a heated fluidized-bed. The temperature and other conditions in the fluidized bed are adjusted to produce a porous pyrocarbon layer that has approximately 50% of the theoretical density of pyrocarbon.

The purpose of the buffer layer is to provide void volume for gaseous fission products in order to limit pressure build-up within the coated particle. It also serves to decouple the kernel from the inner pyrocarbon layer to accommodate kernel swelling, thereby reducing the build-up of stress in the outer coating layers during irradiation. The buffer layer also absorbs energetic fission products recoiling from the kernel surface, thus protecting the inner pyrocarbon layer of the coated particle. The buffer layer has a thickness of approximately 95 µm and a density less than approximately 1.05 gm/cm^3.

5.2.2.1.3 Inner Pyrocarbon Layer

The inner high-density, isotropic layer of pyrolytic carbon is also referred to as the Inner Low Temperature Isotropic (ILTI) pyrocarbon layer. It is deposited from a mixture of acetylene and propylene in a heated fluidized-bed, and has an average density of approximately 1.9 g/cm^3.

The ILTI layer forms the first load-bearing barrier against the pressure exerted by fission products within the fuel kernel and buffer layer, thereby reducing the pressure on the next layer, which consists of silicon carbide (SiC). During irradiation, the ILTI and Outer Low Temperature Isotropic (OLTI) layers shrink at first, expanding again as higher fast neutron dose levels are reached. The interaction between the ILTI and OLTI high-density pyrocarbon layers and the SiC layer sandwiched between them plays an important part in keeping the SiC layer under compressive stress as long as possible during irradiation. The inner pyrocarbon layer has a thickness of approximately 40 µm and a density of approximately 1.9 gm/cm^3.

Although an intact ILTI layer forms a practically impenetrable barrier for fission gases and iodine, it becomes increasingly pervious to cesium, silver, and strontium at higher temperatures.

5.2.2.1.4 Silicon Carbide Layer

The production of fuel spheres having coated particles with intact SiC layers and the assurance that these layers will remain intact under all foreseeable fuel core conditions form the primary barrier to the release of radiation from NGNP. When SiC is deposited from methyltrichlorsilane under the correct conditions, a layer of nearly 100% theoretical density is obtained.

At high temperatures, the ILTI and OLTI layers partially lose their ability to contain cesium, silver and strontium. The purpose of the SiC layer is to prevent the release of these fission products into the graphite matrix, and then into the reactor helium stream. The SiC layer thus acts as the principal pressure and fission product retention barrier in the coated particle. The coated particle structure results in the SiC layer being kept under compression as long as possible by its interaction with the ILTI and OLTI pyrocarbon layers as described above. The silicon carbide layer has a thickness of approximately 35 µm and a density greater than approximately 3.2 gm/cm^3.

The production of fuel spheres having coated particles with intact SiC layers and the assurance that these layers will remain intact under all foreseeable fuel core conditions is the cornerstone of the safety design approach in which the fuel is the primary barrier to the release of radionuclides.

5.2.2.1.5 Outer Pyrocarbon Layer

The OLTI pyrolytic carbon layer is deposited in the same way as the ILTI layer. The function of this layer is to protect the SiC layer against damage in the fuel manufacturing processes following the coating process. It also provides pre-stress on the outside of the SiC layer, due to its interaction with the ILTI layer under fast neutron irradiation during the fuel lifetime in the fuel core, thereby reducing the tensile stress in the SiC layer. Like the inner pyrocarbon layer, the outer pyrocarbon layer has a thickness of approximately 40 µm and a density of approximately 1.9 gm/cm^3.

5.2.2.1.6 Overcoating

In preparation for fuel sphere manufacturing, a coating of finely ground matrix graphite is applied to the outer surface of each coated particle in a rotating drum. This coating is known as the 'overcoat', and its purpose is to prevent coated particles from coming into contact with each other, thereby damaging their coatings during pressing of the fuel spheres.

5.2.2.2 Fuel Element Design

A fuel sphere is formed by the pressing a mixture of over-coated fuel particles and "matrix graphite" into a 50 mm inner sphere. Highly graphitized (i.e., aligned crystalline structure) materials are used for matrix graphite for the following reasons (1) highly graphitized material ensures dimensional stability during irradiation with fast neutrons, as partially graphitized material will undergo further graphitization under fast neutron irradiation, with accompanying dimensional changes, (2) once a fuel sphere has been pressed, it is no longer possible to change the degree of graphitization of the materials contained in the fuel sphere - the reason is that temperatures required for graphitization (2700ºC to 3000ºC) would also damage the effectiveness of the SiC layer, and (3) highly graphitized material has the desirable property that it can be relatively easily pressed to the required density.

Each inner fuel sphere contains approximately 14,500 coated particles, totaling approximately 9 gm heavy metal and 0.86 gm U_{235} per fuel sphere. The inner fuel sphere is then coated with a protective 5mm-thick layer of graphite.

5.2.3 Interfaces

Interfaces in terms of NGNP fuel are defined as all systems that are directly and indirectly involved with the fuel. In general terms direct and indirect fuel interfaces may be the following:

- Pebble bed pressurized and de-pressurized helium coolant.
- All internal components of the system in contact with fuel elements, which include graphite and refractory components – Core Structure Ceramics and the Core Barrel Assembly in contact with the .
- Fuel handling system components – Fuel sphere removal and addition devices at the bottom and top of the rector.
- Reactivity control systems – Control rods inserted into the reactor side reflector to increase or decrease reactivity of the reactor core.
- Reserve shutdown system – A system that will be employed during accident conditions to facilitate shutdown of the reactor core.
- Burn-up Measurement System – A device that will function as part of the fuel handling system to establish the state of burn-up of each fuel sphere as it is processed by the fuel handling system.
- Activity Measurement System – Same as for the Burn-up measurement system.
- Human-system Interface – This is more an indirect interface, where human interaction with fuel will be limited to the control room. However, human interfacing during transit from fuel manufacturing to the reactor may occur.
- Pre- and post irradiation fuel storage – Storage facilities designed to store fuel at different stages of their life cycle.

The abovementioned systems are related to other chapters in this document, and are therefore not discussed in detail here.

5.2.4 Testing, Qualification and Operation

5.2.4.1 Introduction

The LEU-TRISO fuel design developed and tested in Germany, which is the reference design for PBMR fuel, is supported by a large irradiation test database. This database consists of a large number of irradiation tests performed under a variety of temperature, burn-up, and fast neutron dose conditions that provide a clear operating envelope for this fuel type. A statistically significant number of irradiated fuel spheres were subjected to heating tests covering a range of temperatures from 1,400^{o}C to 2,500^{o}C, which is beyond expected temperatures for this fuel type under any conceivable conditions in the PBMR core. Heating tests demonstrated that at accident temperatures, release of Cs-134, Cs-137, Sr-90, Kr-85, and AG-110m were recorded for the higher temperature reaches (1800°C) of during German heating tests [5-4].

To be able to fully define the requirements of testing and qualification for NGNP fuel, it is necessary to take process conditions during expected NGNP plant operation, as well as

possible accident events into consideration when developing testing and qualification plans or specifications upon which to base these plans.

Not only must operational and accident conditions be taken into account, but also expectations pertaining the physical abilities in terms of mechanical integrity and fission product containment during shipping, handling (fuel sphere addition and extraction form the core of the reactor) and post-irradiation storage.

Generally the following is considered important in terms of fuel testing and qualification:

- Physical and micro-structural properties before and after fuel was subjected to reactor operational cycles, with provision for intermediate or multiple cycle fuel evaluation.
- Irradiation properties during exposure to pre-selected temperatures increments.
- Fission product release at pre-selected temperature increments, since this is indicative of coated particle failure.
- Percentage burn-up at pre-selected temperature increments.
- All of the above parameters should be measured for coated particles consolidated in graphite fuel sphere matrix material, as well as coated particles not yet included into the fuel sphere matrix, as this will yield a temperature threshold for the coated particles itself, which will then exclude the beneficial effects of the fuel sphere matrix graphite .
- Simulation conditions and tests cycle durations will be determined by expected operation and accident conditions as indicated by the fuel designers.

5.2.4.2 Testing and Qualification

Even though test results from the German pebble-bed reactor program are available, and is the basis for the PBMR DPP, expected operational parameters specified for the NGNP was not envisaged during PBMR efforts or the German program.

Therefore to ensure the safe application of PBMR DPP based fuel in the NGNP program, the following parameters and/or aspects are considered to be important in terms of fuel testing and qualification must be considered:

- Expected/specified normal operating condition parameters
  - Maximum fuel temperatures
  - Percentage burn-up
  - Percentage fission product release at specified temperatures

- Expected/specified adverse (accident) operating condition parameters
  - Maximum temperatures
  - Percentage burn-up
  - Percentage fission product release at specified temperatures

- Statistical requirements of tests and qualification samples to ensure confident and safe application thereof for design and further operational specification refinements
- Pre-designate procedures and facilities for pre- and post-irradiation tests to support qualifications

Since PBMR fuel will be the bases for the NGNP, some guidelines for the PBMR fuel program are presented in the following sub-sections.

5.2.4.2.1 General Test Program Approach

The PBMR approach to fuel manufacture is to ensure that manufactured fuel is as close to German LEU-TRISO fuel as possible given the fact that there will be unavoidable differences, as the last German fuel of this type was manufactured approximately 19 years ago. However, it is recognized that this does not mean that the irradiation performance of PBMR fuel will be equivalent to the performance achieved by German fuel. Therefore it is necessary to perform a certain amount of irradiation testing on PBMR fuel to confirm the irradiation behavior of the fuel, which will build on the existing database used for the PBMR DPP.

5.2.4.2.2 Methodology

The methodology to define the fuel irradiation test program for PBMR fuel is described in this subsection. The first step in the process is to extract the enveloping normal operation and frequent fault as well as infrequent fault requirements that the PBMR core design imposes on fuel. These enveloping requirements are then compared to the operating envelope for LEU TRISO fuel from the German program in order to establish whether the PBMR requirements are enveloped, and whether there are any gaps to be filled by additional data. An irradiation test program is then defined to provide the required data.

The enveloping requirements, as derived from VSOP and conservative TINTE calculations for the 400 MWt PBMR DPP core design are shown in Table 5.2-1 and Table 5.2-2 for normal operation and fault conditions.

Table 5.2-1: Normal Operation Maximum Irradiation Requirements for PBMR DPP Fuel

Parameter	Unit	Maximum Value
Fuel sphere centre temperature	°C	1068
Burn-up	%FIMA	10.1
Fast Neutron Dose (E > 0.1 MeV)	m^{-2}	2.72×10^{25}
Fuel sphere power	kW	2.76
Average Residence Time	FPD	925

Table 5.2-2: DLOFC and PLOFC Maximum Temperature Requirements for PBMR DPP Fuel

Event	Maximum Temperature (°C)	Time to Reach Maximum Temperature (h)
Pressurized Loss of Forced Cooling (PLOFC) with scram	1319	20
Depressurized Loss of Forced Cooling (DLOFC) with scram	1593	44

The three most important irradiation parameters are temperature, burn-up, and fast neutron dose, in that order.

5.2.4.2.3 Conceptual Review Conclusions

Based on the irradiation requirements presented above, and the German fuel program tests results, certain conclusions can be drawn. In all the German tests performed in test reactors, except the tests performed in the DIDO reactor in Jülich (denoted FRJ2), the fast neutron dose exceeded PBMR-DPP reactor requirements by far. This implies that fast neutron dose did not have a limiting effect on coated particle failure for the temperature and burn-up ranges encountered during tests, which leaves temperature and burn-up to consider.

In order to derive, for PBMR, a value for the number of expected coated particle failures resulting from irradiation during normal operation, results from a subset of German irradiation tests on LEU-TRISO fuel that were performed under controlled irradiation conditions were used. Irradiation detail for all German irradiation tests performed under controlled conditions in Material Test Reactors (MTRs) is summarized in Table 5.2-3.

Irradiation loads shown in Table 5.2-3 are distributed around expected values for PBMR fuel spheres. PBMR irradiation loads were exceeded for some of the tests, but not others. Examples of loads not meeting expected PBMR loads are the fast neutron dose values achieved in some of the FRJ2 irradiation tests. Due to the fact that fuel spheres were irradiated in the deuterium reflector of the DIDO reactor where the fast neutron flux is very low, fast neutron dose values for FRJ2 irradiation tests are lower than values expected for PBMR fuel spheres. However, fast neutron dose values for fuel irradiated in the HFR exceeded required values by a factor of 2 to 3. Also, burn-up values in a number of tests did not reach expected PBMR values, but on the other hand, burn-up values achieved during HFR-P4, SL-P1, and FRJ2-K15 exceeded expected PBMR burn-up values.

The subset of tests from Table 5.2-3 which are representative of expected PBMR irradiation loads are used to establish failure fraction values for normal operation conditions which are shown in Table 5.2-4. Note: Table 5.2-4 will be revised as necessary based on new analysis of German data and/or results from the PBMR test program.

Table 5.2-3: Irradiation Detail for German LEU-TRISO Irradiation Tests

Test	Sample Number	Irradiation Time (EFPD)	Center Temperature (^oC)	Burnup (%FIMA)	Fast Neutron Dose E>0.1 MeV (x 10^{25} m^{-2})	Estimated Number of Coated Particles
HFR-P4	1	351	940-1008	11.1-14.7	5.5-8.0	19 572
	3		1010-1082	9.9-14.7	5.5-8.0	19 572
SL-P1	-	330	743-794	8.6-11.3	5.0-6.8	19 572
HFR-K3	1	359	1200	7.5	4.0	16 400
	2		920	10.0	5.8	16 400
	3		920	10.6	5.9	16 400
	4		1220	9.0	4.9	16 400
FRJ2-K13	1	396	1125	7.5	0.2	16 400
	2		1150	8.0	0.2	16 400
	3		1150	7.9	0.2	16 400
	4		1120	7.6	0.2	16 400
FRJ2-P27	1	232	880-1080	7.2-8.4	1.4	7 340
	2		1220-1320	8.0-9.0	1.7	7 340
	3		1080-1130	7.2-8.1	1.3	7 340
Total Number of Coated Particles in Phase 1 Tests						**211,936**
FRJ2-K15	1	682	970	14.1	0.2	9 560
	2		1150	15.3	0.2	9 560
	3		990	14.7	0.1	9 560
HFR-K5	1	565	923	7.81	4.0	14 580
	2		909	10.06	5.8	14 580
	3		903	10.30	5.9	14 580
	4		921	9.26	4.9	14 580
HFR-K6	1	634	1090	8.34	3.2	14 580
	2		1130	10.64	4.6	14 580
	3		1140	10.88	4.8	14 580
	4		1130	9.89	4.5	14 580
Total Number of Coated Particles in Phase 2 and other Tests						**145,320**
Total Number of Coated Particles in all MT Tests						**357,256**

Table 5.2-4: Irradiation Detail for German LEU-TRISO Irradiation Tests

Test	Sample Number	Irradiation Time (EFPD)	Center Temperature (^oC)	Burnup (%FIMA)	Fast Neutron Dose E>0.1 MeV (x 10^{25} m^{-2})	Number of Coated Particles
HFR-P4	3	351	1010-1082	9.9-14.7	5.5-8.0	19 572
HFR-K3	4	359	1220	9.0	4.9	16 400
HFR-K6	2		1130	10.64	4.6	14 580
	3		1140	10.88	4.8	14 580
	4		1130	9.89	4.5	14 580
Total Number of Coated Particles in selected MTR Tests						**79,712**

Due to the fact that the AVR GLE-3 fast neutron dose burn-up curve does not envelope the PBMR curve completely at high burn-up values, and in order to validate burn-up calculations for fuel spheres in the PBMR core, a fuel validation program is proposed. Fuel burn-up behaviour will be followed over the whole burn-up range for equilibrium fuel by extracting irradiated fuel spheres from the PBMR operating at full power from time to time, and subjecting them to PIE followed by heating tests. This will be kept up until the first equilibrium fuel spheres reach the target burn-up.

In NGNP Special Study 20.2: Prototype Power Level, certain cases were studied and analyzed through best-estimate VSOP analyses. Table 5.2-5 presents the results of the analyses, an provides a position in terms of the expected conditions for the NGNP at 500 MWt power level and the neutronic and thermal-hydraulic parameters thereof relative to results for the PBMR-DPP.

Table 5.2-5: Neutronic and Thermal-hydraulic Parameter Comparison between PBMR DPP and NGNP

Parameter (limit)	Units	PBMR-DPP	NGNP
Power level	MWt	400	500
Burn-up (<100,000)	MWd/t_{HM}	95 723	94 079
Q_{max}/FS	kW	2.80	3.63
Fuel residence time	Days	964	758
T_{max} fuel (normal conditions)	^oC	1071	1168
T_{max} fuel (PLOFC conditions)	^oC	1320	1460
T_{max} fuel (DLOFC conditions)	^oC	1499	1668

From the table above it is possible to see that the requirements of the NGNP-Case 5, does not deviate substantially from the requirements of the PBMR DPP.

5.2.4.2.4 PBMR Fuel Irradiation Program

Following from the above conclusions, it is proposed to extend the existing German database by performing additional irradiation and heating tests using PBMR fuel spheres from a qualified fuel manufacturing line. The proposed PBMR irradiation program will consist of irradiating a number of fuel spheres, containing a statistically significant number of coated particles, to full PBMR irradiation requirements in a material testing reactor. Irradiation will be performed in such a way that temperatures encountered during normal cycling of fuel spheres through the PBMR core are simulated until PBMR irradiation targets are reached. A number of simulated PLOFC temperature transients will be superimposed on the normal temperature cycles for a sufficient number of fuel spheres to ensure statistic validity. Following the completion of the irradiation test, a sufficient number of irradiated fuel spheres will be subjected to heating tests using temperature cycles simulating the expected DLOFC temperature transient for the PBMR.

The PBMR start-up core consists of a mixture of start-up fuel spheres and graphite spheres. In addition to irradiation test on fuel spheres, irradiation tests will also be performed on matrix graphite spheres manufactured on the same manufacturing line as fuel spheres. The reason for this is that some matrix graphite properties cannot be measured on fuel spheres containing coated particles.

5.2.4.2.5 Normal Operation and Accident Conditions Testing and Qualification

Generally, during normal and accident conditions operation of TRISO particle containing fuel spheres, three variables must be taken into consideration. These are in order of importance; temperature, burn-up, and fast neutron dose. Deviations of these variables from acceptable, specified levels are an indication of process parameters where possible fuel failure and pending upset process conditions (accident conditions which may include the release of fission products) may arise, and must be considered during testing and qualification efforts.

5.2.4.2.5.1 Enveloping Normal Operation for NGNP and PBMR

In an effort to present a better picture of the position of the NGNP operational requirements and the requirements it places on fuel in terms of temperature, burn-up and fast neutron fluency, data from Table 5.2-3, Table 5.2-4 and Table 5.2-5 were used to plot rough envelopes in terms of temperature, burn-up, and neutron dose in comparison with the current PBMR envelopes for the parameters. These plots are presented in Figure 5.2-1, Figure 5.2-2, and Figure 5.2-3.

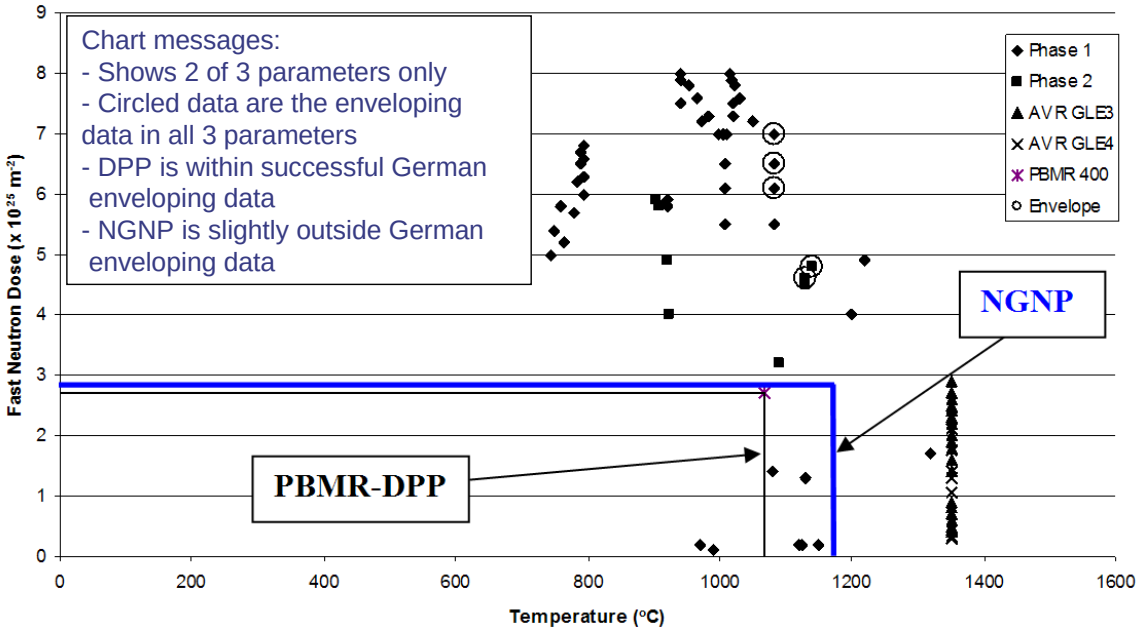

Figure 5.2-1: Comparison of PBMR & NGNP Fast Neutron Dose and Temperature Requirements with the German Experience Database

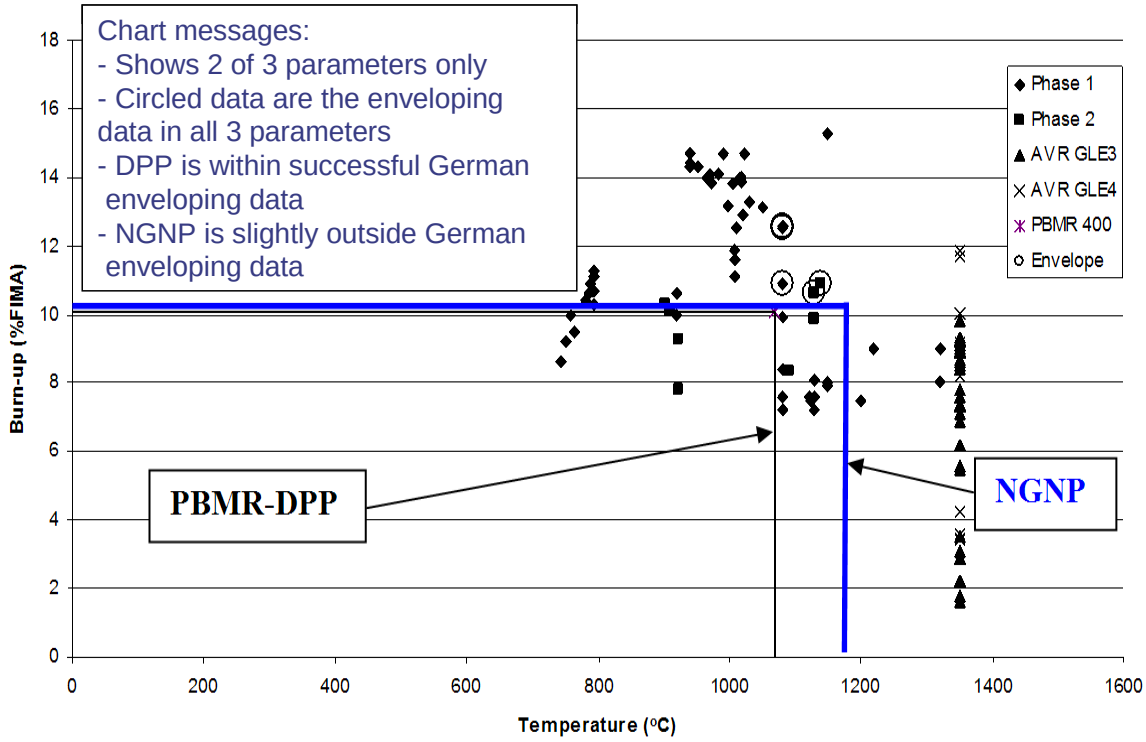

Figure 5.2-2: Comparison of PBMR & NGNP Burnup and Fuel Temperature Requirements with the German Experience Database

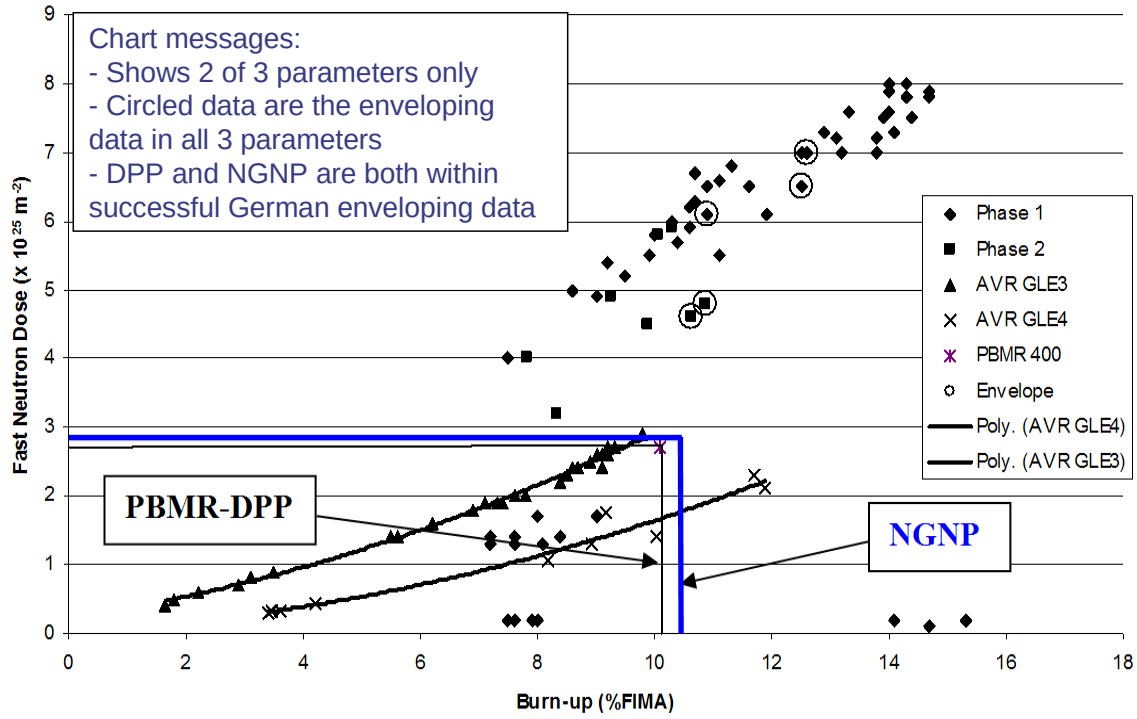

Figure 5.2-3: Comparison of PBMR & NGNP Fast Neutron Dose and Burn-up Requirements with the German Experience Database

From these diagrams it is possible to gain insight into the estimated position of the NGNP operational envelope and that of PBMR DPP relative to the German experience database. It can be seen that the envelopes for the NGNP does not exceed that of the PBMR substantially. The NGNP envelope mainly exceeds the PBMR envelope in terms of temperature, and % FIMA. However, a credible number of data points in the diagrams exceed the envelopes for both PBMR and NGNP.

5.2.4.2.5.2 Accident Conditions (Fission Product Source Term Testing and Qualification)

Accident conditions will give rise to higher than normal operational conditions. Most importantly the rise in reactor core, and thus reactor fuel temperature, may affect one or more aspects of the fuel system.

One way to monitor the performance of the fuel system is to measure the fission product release rate from the fuel under controlled temperature increases.

Although none of the German irradiation test samples that met all PBMR irradiation requirements simultaneously were heated to DLOFC temperatures, some conclusions can be drawn from heating tests performed on irradiated samples that were subjected to irradiation loads close to PBMR requirements.

Figure 5.2-4 shows Cs137 release fractions at temperatures of 1600°C and 1800°C for German fuel spheres irradiated in material test reactors.

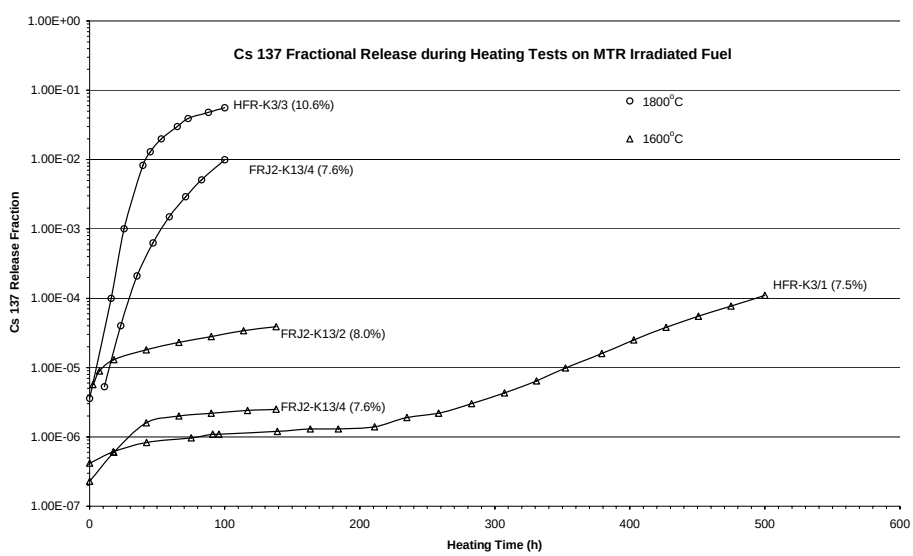

Figure 5.2-4: Cs137 Release Fractions at 1600°C and 1800°C

Cs137 release fractions for these heating tests form two bands, one for heating tests performed at 1600°C and another with higher release fractions for heating tests performed at 1800°C. The maximum NGNP DLOFC temperature is 1668°C, which means that for NGNP additional heating tests would be required in the temperature range between 1600°C and 1800°C.

5.2.4.2.6 Fuel Manufacturing

Please refer to Section 5.2.5 for detail in terms of the involvement of the Pilot Fuel Plant (PFP) during the initial fuel supply needs of the NGNP.

5.2.4.2.7 Conclusion

From the data presented in the above sub-sections, the following conclusions can be drawn in terms of the NGNP:

- Data from the German and PBMR programs may be used for NGNP pre-conceptual design.
- Validation and verification of data from the German program may be required to satisfy statistic needs, as well as design needs.
- Further testing may also incorporate additional test criteria.

5.2.5 Fuel Supply and Fabrication

5.2.5.1 Suppliers

5.2.5.1.1 Introduction

The NGNP project requires a supply of high-quality fuel with demonstrated performance to meet the plant startup schedule. The Westinghouse Team proposes an approach that uses proven fuel from a qualified supplier for initial fuel loading and operation in combination with a partnership with INL for long-term development of advanced fuel designs and domestic fabrication capability according to the development of the commercial market in the US.

The Advanced Gas Cooled Reactor (AGR) Fuel Development Program, [5-1] sponsored by the Department of Energy (DOE), explored the development and initial testing of TRISO-coated UCO fuel for higher burn-up, higher temperature gas-cooled reactors. This development work was completed during 2006 in anticipation of transferring the technology to future fuel fabricators for implementation. While this effort is a necessary step in the development of advanced gas reactor technology, the implementation time for this new fuel type is expected to be long-lead with regard to design, fuel testing and qualification, licensing, process scale-up development, construction, and startup timelines. Such a program could take 15 years (see subsection 5.2.5.1.4) and any delays would extend the program further. Given the NGNP project schedule, such a program is not feasible.

The NGNP schedule can be met and fuel manufacturing and performance risks can be greatly mitigated using proven technology. The Westinghouse Team, comprised of Westinghouse Electric Company, Pebble Bed Modular Reactor (Pty) Ltd., and Nuclear Fuel Services, Inc. (NFS) proposes that INL adopt a proven fuel supply comprising a design and a manufacturing process equivalent to the demonstrated German TRISO fuel in conjunction with Pebble Bed Modular Reactor (Pty) Ltd fuel manufacturing while implementing a companion program to ensure supplies of long-term, advanced reactor fuel. The following sections describe this approach.

5.2.5.1.2 Near Term Fuel Supply and Risk Reduction

Pebble Bed Modular Reactor (Pty) Ltd. is now building a Pilot Fuel Plant (PFP) to fabricate fuel spheres for the PBMR Demonstration Power Plant (DPP) in South Africa. The PFP is being constructed in Pelindaba, South Africa. This plant will fabricate fuel equivalent to that manufactured and demonstrated in operating reactors in Germany, based on the proven German design and manufacturing process, i.e., PBMR fuel uses the same design specifications, an equivalent manufacturing process, equivalent equipment, equivalent materials, and equivalent or improved quality.

Following the fabrication of equilibrium fuel spheres for the DPP, the PBMR Pilot Fuel Plant will be available in the 2014 - 2015 timeframe for NGNP fuel production. PFP-manufactured fuel spheres for DPP will contain TRISO-coated enriched UO_2. This fuel element design, which has proven its ability to tolerate the PBMR operating envelope in the German reactors for over 20 years, is available for the NGNP. The use of this fuel design will provide valuable NGNP startup and operating information until more advanced fuel designs are implemented. For example, following the demonstration of the UO_2 fuel, uranium oxycarbide (UCO) could be, developed, qualified, and deployed in NGNP in order to achieve higher operating temperature regimes (1200°C) and greater efficiencies [5-2]. The UCO fuel design however, requires qualification, licensing, testing, and manufacturing scaleup, whereas the PBMR UO_2 has been proven in operation and is ready to implement for NGNP.

5.2.5.1.3 Startup to Equilibrium Core Supply

Timely supplies of graphite spheres, startup fuel, and equilibrium fuel will be required for the NGNP. The estimated quantity of spheres loaded in the NGNP core is 452 000 spheres (plus about 30 000 spheres in the defueling chute). Equilibrium operation will include continuous refueling, with the average of each sphere cycled six (6) times through the core. Fuel management system processes about 2900 fuel spheres per day, removing spent fuel and inserting about 490 fresh fuel spheres per day. The estimated number of spheres for startup and initial operation are approximately:

- 482,000 graphite spheres (452,000+30,000)
- 241,000 startup fuel spheres

- 482,000 equilibrium fuel spheres

Figure 5.2-5 illustrates a general NGNP startup to equilibrium core fuel loading as well as the timeframe in which fuel supplies will be required.

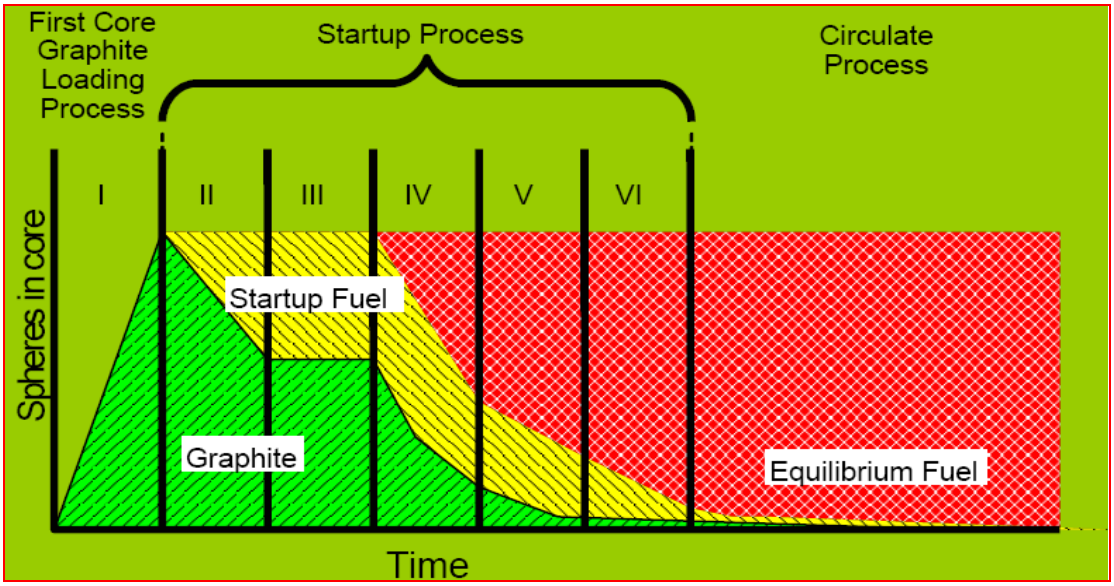

Figure 5.2-5: Diagram of the General NGNP Start-up to Equilibrium Fuel Sphere Loading

The length of the time periods denoted in the figure is in the 60 to 70 day range, with the actual timeframe dependent upon the fuel enrichment and detailed core analysis. Graphite spheres are initially loaded into the core. To achieve initial criticality, a mix of initial enrichment fuel spheres and graphite spheres is then added to the top of the core. The mix is selected to achieve criticality with fuel spheres flowing down to at least 4m from the top of the core. The first full operating temperature is reached prior to the fuel spheres filling approximately 9m down from the top of the core. Equilibrium fuel is then introduced to the system while graphite and startup fuel spheres are removed. Removal of graphite and startup fuel spheres continues until the core is filled with equilibrium fuel. As fuel spheres are circulated, the core will eventually contain all equilibrium fuel spheres for routine operation.

5.2.5.1.4 Integrated Fuel Supply Program

Figure 5.2-6 summarizes the subprograms that comprise the manufacturing of NGNP fuel. As indicated by the dark green shading, PBMR has completed a significant portion of the fuel plant development and design activities at this time. With the PFP being available, the Westinghouse Team expects the cycle time for developing a separate fuel facility to supply NGNP will be reduced from 15+ years to within 5 years.

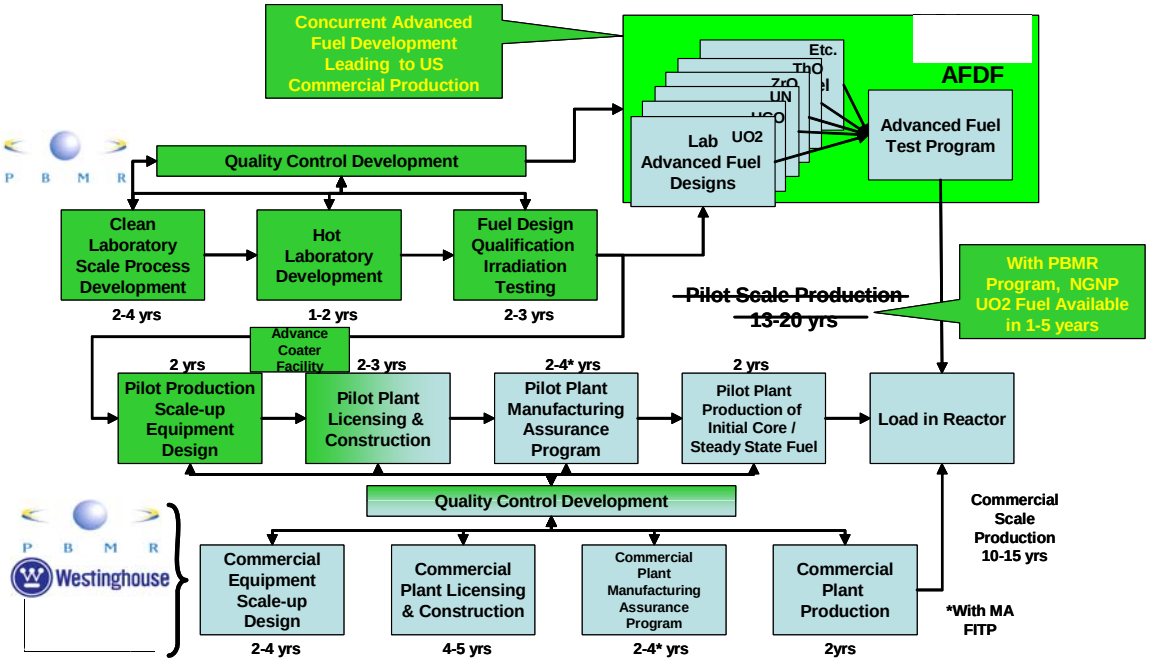

Figure 5.2-6: Proposed Program for the NGNP Fuel Supply

Salient features of the proposed NGNP fuel supply framework illustrated in Figure 5.2-6 follows:

- Initial Fuels - Fuel will be provided to the NGNP plant from the fully-qualified PBMR fuel production facility in Pelindaba, South Africa. As mentioned above, the PFP will provide fuel equivalent or improved from that used in the successful German HTR program. This supply will continue until the US market demand would support a domestic commercial manufacturing facility. PBMR (Pty) Ltd. would provide the initial core and reloads until then.
- Advanced Fuel Development – Enhanced fuel technology development options have been advanced that would allow even higher operating temperature and/or higher burnup plus reduced costs.
- Advanced Fuel Manufacturing – Likewise enhanced fuel manufacturing technology for such advanced fuels plus more continuous processing and automation are envisioned.

In summary, the benefits of the integrated fuel supply program are:

- Experienced team of fuel vendors
- Proven technology for startup
- Less capital investment required in the US
- Meet project schedule with minimal risk
- Simpler licensing process
- Shorter timescales for initial fuel delivery, and

- Advance fuel designs and alternate manufacturing sources addressed for commercial plants

The industrial participation in the NGNP fuel fabrication will integrate Commercial Experience and Best Practices in the following:

- Quality Control/Assurance
- Manufacturability
- Technical Expertise
- Safety/Regulatory Expertise
- Lean Manufacturing

5.2.5.2 Fuel Fabrication

The general layout of the PBMR fuel sphere is shown in Figure 5.1-1 and its design is summarized in Section 5.2.2. This section summarizes the fuel sphere fabrication process, an overview of which is shown in Figure 5.2-5. Quality controls are imposed throughout the process, covering materials receipt as well as the actual fabrication of the kernel, coated particle, and the fuel sphere. The following paragraphs summarize the fabrication of the fuel sphere.

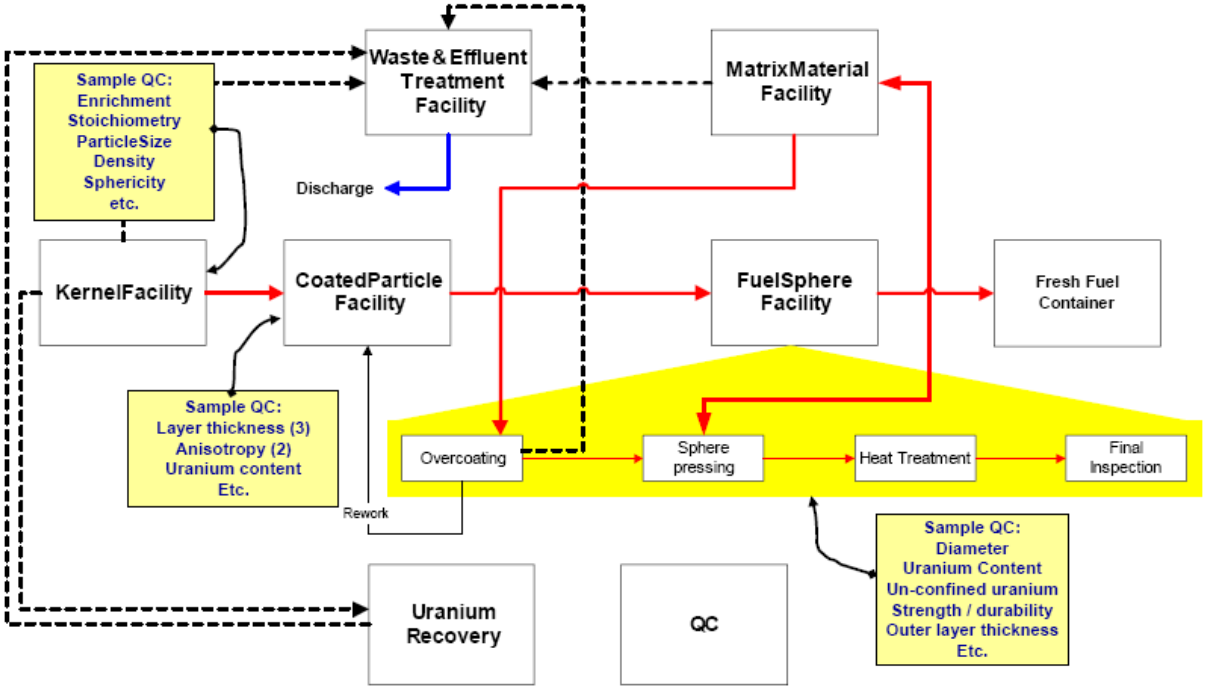

Figure 5.2-7: PBMR Fuel Sphere Fabrication Process Overview

The basic manufacturing steps for the kernel are as follows: U_3O_8 powder is dissolved in nitric acid to form uranyl nitrate. The solution is neutralized with ammonia and allowed to flow through an oscillating nozzle to produce spherical droplets. As the droplets fall through a gaseous ammonia atmosphere, the spherical outer surface of the droplet gels. The particles fall into an aqueous ammonia solution where they solidify into ammonium uranate. They are then aged and washed to remove ammonium nitrate and organic additives, dried, and calcined. The dry kernels are reduced to UO_2 in hydrogen and sintered, and are then ready to be coated.

The buffer layer is deposited from acetylene (C_2H_2) in a heated fluidized-bed. The temperature and other conditions in the fluidized bed are adjusted to produce a porous pyrocarbon layer that has a density approximately 50% of the theoretical density of pyrocarbon.

The inner pyrocarbon layer is deposited from a mixture of acetylene and propylene in a heated fluidized-bed, and has an average density of approximately 1.9 g/cm^3. The silicon carbide layer deposited from methyltrichlorsilane and, under the correct conditions, a layer of nearly 100% theoretical density is obtained. The outer pyrocarbon layer is deposited in the same manner as the inner pyrocarbon layer.

Un-round coated particles show a much greater tendency to crack than spherical particles while being pressed into the fuel sphere. Therefore, wet chemical processes that produce highly spherical kernels are used during kernel manufacture. Further, coated particles that show an unacceptable deviation from a spherical shape are removed on a sorting table whose surface is slightly inclined in one direction as it is vibrated.

In preparation for fuel sphere manufacturing, a coating of finely ground matrix graphite is applied to the outer surface of each coated particle in a rotating drum. This coating is known as the ‘overcoat’, and its purpose is to prevent coated particles from coming into contact with each other, thereby damaging their coatings during pressing of the fuel spheres.

With the coated particles available, the fuel sphere is formed in the following four basic steps. First, about 14,500 coated particles are mixed with “matrix graphite” comprising natural graphite powder, electro-graphite powder and a phenolic binding resin. Second, after through agitation of the coated particle/graphite mixture, iso-static pressing will be utilized to form the “inner” sphere with a diameter of 50mm. In the third step, after the inner sphere has hardened, the matrix graphite material is added to the mould holding the inner sphere and pressed to form a protective, 5 mm thick fuel-free region around the inner sphere. Finally, after hardening the outer fuel sphere shell, the entire fuel sphere is machined to its final dimensions and then will be sintered, to render the final fuel sphere.

Please also refer to Section 5.2.2 as this section contains a description of the fuel system.

5.2.5.3 Shipping / Transportation

5.2.5.3.1 Delivery and Transportation of Fresh Fuel

The transport of radioactive material comprises:

- The transport of Enriched Uranium Oxide (EUO) from point of taking delivery to entering the South African port of import
- The transport of EUO from entering the South African port of import to Pelindaba.
- The transport of the fresh fuel from the PFP at Pelindaba to the South African port of export.
- The transport of the fresh fuel from the South African port of export to the United States of America port of import.
- The transport of the fresh fuel from the United States port of import to the point of use within the United States.

The transport within the Republic of South Africa shall be managed and controlled by transport procedures developed within the framework of the Environmental Impact Assessment while complying with all national and international statutory and regulatory requirements. Transport outside of the borders of the Republic will be performed within the framework of all applicable international conventions and protocols.

5.2.5.3.2 Fundamental Safety Design and Transport Philosophy

The following key safety objectives underlie the fundamental safety philosophy for the design and manufacture of the Fresh Fuel Transport Container (FFTC).

- To take all reasonable practicable measures throughout the entire lifespan of the FFTC.
  - Equal national and international safety norms.
  - Minimize the number and severity of potential transport related incidents posing a threat to man or environment or involving loss of product or equipment.
  - Mitigate the consequences of transport incidents should they occur.
  - Ensure that for possible accidents taken into account in the transport strategy, the consequences of the associated radiological and/or chemical hazards will be less than the prescribed limits.

- Identify emergency systems in order to minimize the extent of potential damage caused by any incident.

It is considered that the above-mentioned safety objectives will be achieved by:

- Demonstrating that the safety design, manufacture and transport of the FFTC are within adequate safety margins. This implies that:

  - The transport procedures have been analyzed and evaluated to ensure that for normal and identified potential accident conditions adequate provision has been made for safety issues.
  - The defense-in-depth principle is applied in the transport strategy.
  - The procedures make provision that for all pathways the radiation and/or chemical doses received by the operators and public, and releases to the environment from normal operations and from accident conditions, not only meets all regulatory limits and constraints, but is also As Low as Reasonably Achievable.
  - Test Programs demonstrate that equipment utilized comply with regulatory requirements.

- Operating inside a series of defined programs throughout its lifespan. These include:
  - Operational Procedures
  - Radiation Protection Programs
  - Maintenance Programs
  - In-service Inspection Programs
  - Security Plan
  - Emergency Plan

The world-wide safety of the transport of radioactive materials is based on the International Atomic Energy Association (IAEA) Transport Regulations. The provisions of these regulations are not based on quantitative risk assessments, and they do not require such assessments to be undertaken. The excellent world-wide safety record of the transport of radioactive material over almost 40 years under the regulations endorses their effectiveness.

5.2.5.3.3 Licensing Strategy for the Fresh Fuel Container

The world-wide safety of the transport of radioactive materials is based on the IAEA Transport Regulations. The provisions of these regulations are not based on quantitative risk assessments, and they do not require such assessments to be undertaken. The excellent world-wide safety record of the transport of radioactive material over almost 40 years under the regulations endorses their effectiveness.

The licensing strategy is outlined in Figure 5.2-8. The diagram shows the safety case actions that project has identified for licensing this FFTP for the PBMR project.

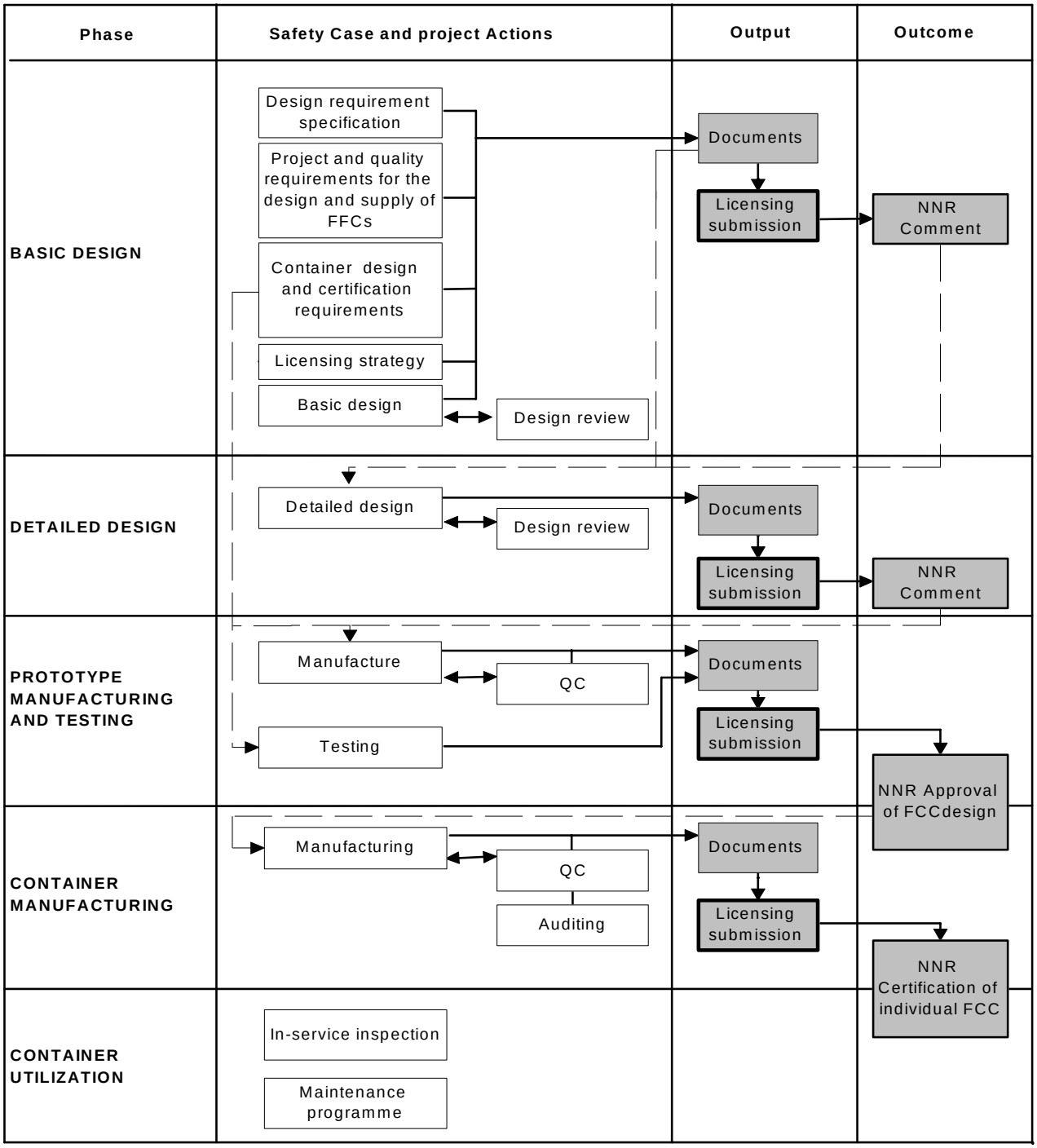

Figure 5.2-8: Fresh Fuel Container Licensing Strategy

5.2.5.3.4 Fresh Fuel Transport Container Utilization

Only when the FFTC is approved by the South African Regulator shall it be utilized to transport fresh fuel spheres from Pelindaba to the PBMR or the port of export.

As for approval for use outside South Africa, this will require a separate revalidation of the license by all those competent authority through whose jurisdiction the containers transits, including territorial waters and airspace. In some instances this process may take over 12 months.

FFTC Project Schedule (best-estimate) is as follows:

- Complete detailed design – August 2007
- Vendor submit Documentation for Prototype – September 2007
- Submit QCP to Regulator for approval – End Sept 2007
- NNR approval – October 2007
- Manufacture prototype – Dec 2007
- Test prototype (drop / fire etc) – December 2007
- Submit design information and test results to regulator – Dec 2007
- Regulator issue license – February 2008
- Manufacture and deliver new fuel containers – July 2008
- Re-license package approx 1 year from date of submission

5.2.6 Waste Management and Recycling

5.2.6.1 Waste Identification

5.2.6.1.1 Fuel Manufacturing

Solid waste generated during fuel manufacturing is expected to be of similar magnitude to Light Water Reactor (LWR) fuel manufacturing. Such streams are comprised of fuel scrap materials from manufacturing, filters from exhaust ventilation, Personnel Protective Equipment (PPE), etc. However, based on data from pilot fabrication of similar fuel, liquid waste volume generation is expected to be considerably greater than in LWR fuel production. Pilot testing data from NUKEM on production of LEU/TRISO particles in graphite fuel pebbles indicates liquid waste volumes about 30 times greater than for LWR fuel manufacturing. These data are derived from a prototype process, and would likely be significantly reduced as pebble fuel manufacturing is developed and optimized. Future development should include efforts to reduce waste during fuel manufacturing.

5.2.6.1.2 Decommissioning Waste

The bulk of the decommissioning waste from the PBMR will be handled similarly to other reactor decommissioning waste. However, there is one significant waste type that is not typical of other reactors. The ceramic internals of the PBMR reactor will require special attention. These items represent a small portion of the total decommissioning waste, but contain most of the radioactivity. This classification includes the graphite bricks from the reflector and carbon bricks used for insulating and shielding. The dominant long lived nuclides present in the ceramic internals are ^{14}C and ^{36}Cl in order to minimize the occurrence of these contaminants, the nitrogen and chlorine content of the graphite must be minimized.

Because the ceramic internals waste is unlike waste typical of current LWR reactors, the handling and treatment of this waste is uncertain. Several options have been proposed for the treatment of graphite and carbon waste. These options include burial, incineration, pyrolysis, recycling, and even deep sea disposal. In addition to these, the option of filling the entire pressure vessel with grout for storage and future treatment has been suggested. An acceptable disposal pathway for this waste must be determined.

5.2.6.2 Fuel Waste Management

The PBMR NGNP will utilize a once through fuel cycle. Spent fuel will initially be stored on-site to allow time for radioactive decay, and will ultimately be disposed of in a geologic repository. Unlike spent fuel from most nuclear power plants, PBMR NGNP spent fuel will go directly from the reactor into a dry storage tank rather than initial storage in a water pool. This is made possible by the relatively low power density of the PBMR NGNP fuel elements.

The high burn-up and physical form of the PBMR NGNP spent fuel make it an undesirable target for proliferation. The same factors make it an unlikely candidate for recycling/reprocessing. Although not economically practical, reprocessing of spent PBMR NGNP pebbles is technically feasible. Conceptually, reprocessing could be performed as follows. First the graphite compact would be burned (possibly preceded by crushing) to expose the SiC coated TRISO particles. Next the fuel particles would be crushed to expose the kernel and interior carbon layers. The crushed particles would be burned to remove the carbon and the resulting oxides powder would be dissolved in nitric acid. This solution would then solvent extracted using the PUREX process. This is similar to the fuel recovery process used by JAERI in their HTTR fuel fabrication process, with the added step of purification.

5.2.6.3 Long Term Storage

The PBMR/NGNP spent fuel will be stored in the Sphere Storage System (SSS) for both interim and long term. The SSS forms part of the Fuel Handling and Storage System (FHSS). (Here interim is intended to mean during reactor operation, with long term being a finite length of time after the reactor has been shut down.) The SSS is a dry storage system consisting of multiple bulk storage tanks, each capable of holding more than 500,000 spheres.

The SSS consists of twelve storage tanks for a total capacity of more than six million spheres. Figure 5.2-9 shows the conceptual arrangement of spent fuel tanks used for containment of spent fuel. This capacity is adequate to store spent fuel of over 40 years during the lifetime of the reactor. The long term storage requirements for the NGNP will be evaluated during the conceptual design. The bulk storage tanks are cylindrical with a diameter of about 3.1m and a height of 18m. As part of the FHSS the contents of each tank can be transferred to any other tank. Tank contents can also be returned to the reactor to allow for temporary storage of used fuel and graphite spheres for reactor maintenance activities.

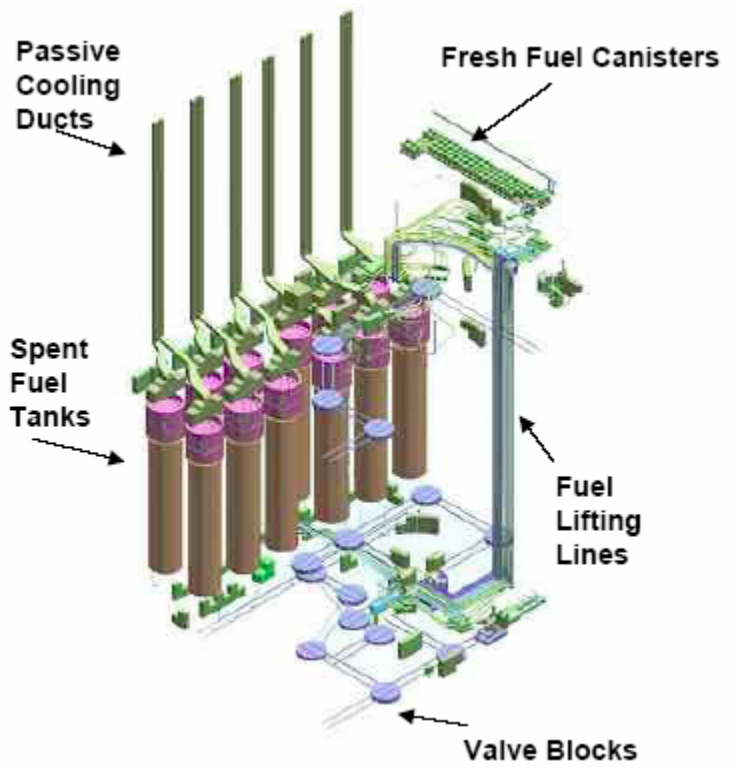

Figure 5.2-9: Preconceptual Arrangement of PBMR Spent Fuel Tanks

The spent fuel tanks are designed to be critically safe when fully loaded. This sub-criticality is achieved through volume geometry and by taking credit for burn-up and enrichment. Inside each tank are a number of large diameter steel tubes running from top to bottom. This tube arrangement is conceptually illustrated in Figure 5.2-10. These tubes maintain a specific geometry of fuel pebbles within the tank. Other than the steel itself, no additional neutron absorbing material is required.

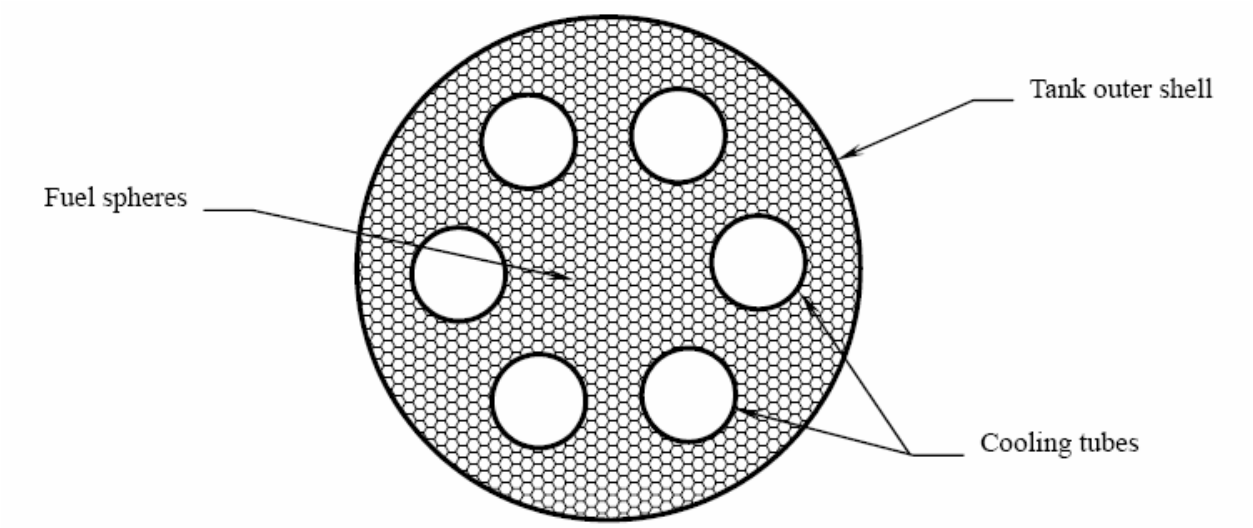

Figure 5.2-10: Typical Storage Tank Cross-Sectional Geometry

Radioactive decay of stored spent or used spheres produces significant heat which must be removed. The maximum heat load for a filled tank of spent fuel spheres will be about 140kW with the heat load dropping exponentially thereafter. For a tank of used fuel (not completely spent) the total heat load can reach a maximum of more than 600kW. Inside each tank are several cooling tubes designed to transfer this heat out of the tank. For long term spent fuel storage, cooling will be accomplished via closed-loop active cooling. In the closed-loop configuration cooling air is filtered and dried. The outlet air passes through a heat exchanger and is filtered and reused. When used fuel is being stored open-loop active cooling will be used. In this configuration filtered atmospheric air is used to cool the tank with the outlet air passing directly to the exhaust duct. As a fail-safe backup, passive cooling with atmospheric air will be used. The advantages of the passive cooling system are its fail safe nature and high cooling capacity. However, cooling with atmospheric air long term presents a corrosion problem. The design basis for the PBMR DPP assumes installation in aggressive coastal conditions. The combination of the harsh atmosphere with gamma radiation from the spent fuel and elevated temperatures results in conditions that no cost-effective material of construction was found suitable to handle over the planned duration. Thus the decision was made to use a closed loop active cooling system for spent fuel storage. However, the corrosion issues related to passive (or open-loop active) cooling will not cause a problem during short term cooling of spent fuel, or as a backup in the event of active cooling system failure. The cooling system also includes a closed-loop conditioning mode to maintain a clean dry atmosphere around the tanks when cooling is not required. The various cooling system modes are illustrated in Figure 5.2-11 below.

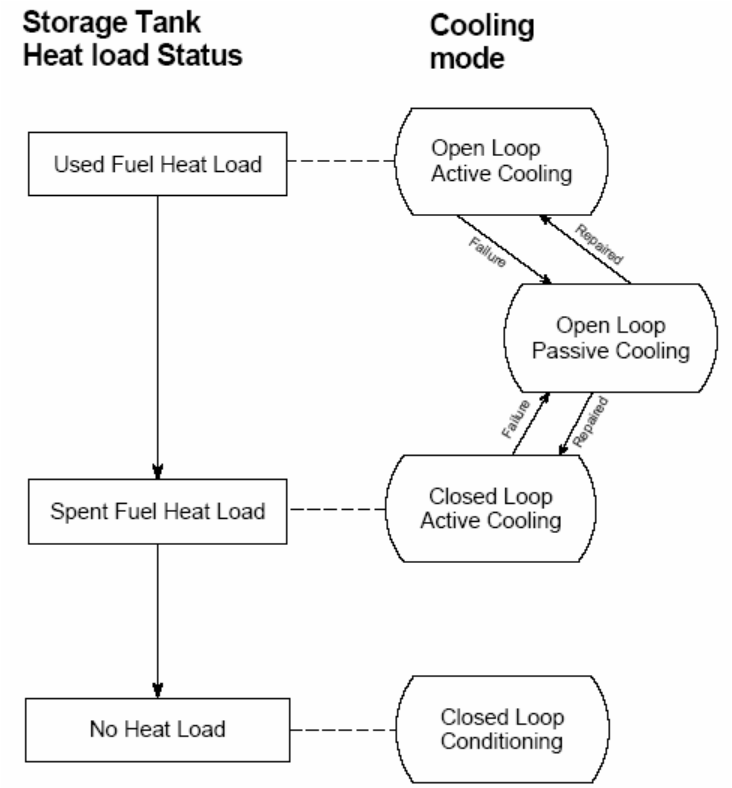

Figure 5.2-11: SSS Cooling Mode Mapping

5.3 FUEL DESIGN DEVELOPMENT NEEDS

Design development needs presented in this sub-section are aimed at validating assumptions in light of key concerns in fuel manufacturing and performance. These uncertainties can be translated into Design Data Needs (DDNs) and are summarized below:

- Statistical confidence in terms of the existing PBMR experience database.
- Fuel process development.
- Quality Control technique/process qualification.
- Effects of temperature, burn-up and neutron dose, as well as the time at certain temperatures on the integrity of the fuel
- Fission product transport modeling.
- Design code validation.

These DDNs will be addressed under the current PBMR program [5-5]. The following subsections presents PBMR strategies intended to alleviate these uncertainties.

5.3.1 Fuel

The Fundamental Function of Confinement of Radioactive Materials is assigned principally to the fuel. The fuel performance therefore has a significant impact on fission product releases at the site boundary for normal operation and accident condition calculations required for licensing the NGNP plant. The DDNs identified in this section will support these calculations.

5.3.1.1 Functions

The main function of the fuel is to retain fission products within the Fuel Elements

5.3.1.2 Key Requirements

The specified service conditions requirements influencing DDNs for the fuel are presented below:

- Nominal Reactor outlet temperature of 950 °C
- Nominal Reactor Inlet Temperature of 350 °C
- Nominal Reactor Power level of 500 MWt

5.3.1.3 Design Data Needs

A total of three DDNs have been identified for the Fuel. These DDNs address Fuel irradiation and heating tests as well as graphite irradiation tests, and can be subdivided in to the following:

- Fuel Irradiation Tests for Normal Operational Conditions (DDN NHSS-01-01)
- Fuel Heating Tests for Accident Conditions (DDN NHSS-01-02)
- Fuel Graphite Irradiation Tests (DDN NHSS-01-03)

5.3.1.3.1 FUEL IRRADIATION TESTS FOR NORMAL OPERATIONAL CONDITIONS (DDN NHSS-01-01)

5.3.1.3.1.1 Assumptions (to be confirmed by the related R&D program)

It is assumed that the irradiation requirements for NGNP Fuel during normal heat generation operation will be enveloped by the PBMR NGNP Fuel qualification program. Operating the fuel within its qualification envelope will assist in validation of fission product release calculations.

5.3.1.3.1.2 Current Database Summary

Fuel spheres produced in Germany for the HTR-Modul reactor Proof Tests were adopted as the reference fuel design for PBMR fuel. Proof Test fuel spheres were produced in Germany in 1988, and represent the culmination of the German LEU-TRISO fuel development and qualification program conducted from 1981 to 1988. As such, this fuel design represents state of the art German pebble bed fuel development. Furthermore, a large body of experimental data obtained by means of an extensive irradiation and Post-irradiation Examination (PIE) program, covering a wide range of operating parameters, supports the German LEU-TRISO fuel design. This database establishes a well-defined operating envelope for this fuel design covering normal operation and frequent faulted conditions as well as infrequent faulted conditions.

The PBMR Fuel approach is to manufacture fuel spheres that will be equivalent to state-of-the-art fuel spheres produced in Germany for the HTR-Modul Proof Test in 1988. Equivalence is taken to mean that PBMR fuel spheres will be manufactured to the same specification as German Proof Test fuel, using the same manufacturing process, similar direct materials, and a similar quality control systems. This will ensure that PBMR fuel spheres will be equivalent to German Proof Test fuel regarding conformance of all parameters that are controlled during the manufacturing process to the standards established in Germany, which will be qualified during the PBMR program [5-5]. This will be demonstrated by performing irradiation tests on a statistically significant number of coated particles in PBMR fuel spheres produced on a qualified production line for the irradiation loads of the PBMR DPP to be built at Koeberg, South Africa.

5.3.1.3.1.3 Anticipated Operational Conditions

It is anticipated that the current operational conditions chosen for the NGNP Nuclear Heat Supply System will result in the fuel operating outside the PBMR Fuel qualification envelope for the PBMR DPP during normal operation. Additional fuel qualification is therefore required. The NGNP Fuel normal operation fuel irradiation requirements are summarized in Table 5.3-1.

Table 5.3-1: NGNP Fuel Normal Operation Fuel Irradiation Requirements

Requirement	Unit	Value
Maximum Fuel Temperature	°C	1168
Burn-up	MWD/tU	94,079
Fast Neutron Dose	cm-2	2.7×10^{21}
Irradiation Time	Efpd	758

5.3.1.3.1.4 Summary of Data Needed

Best estimate calculations were performed during the preceding NGNP Special Studies and there are uncertainties associated with the calculations provided. From an endurance point of view, temperature is the most important driver and therefore temperature uncertainties when defining irradiation and heating test parameters need to be taken into account. At the moment, the magnitudes of these uncertainties are not clear, and will be addressed in future fuel qualification efforts. An uncertainty as large as 100°C is currently assumed until the temperature uncertainties have been defined after the PBMR DPP Software Verification and Validation is completed. Therefore, the NGNP irradiation test is based upon a maximum normal operation temperature of 1270°C. PBMR Fuel will have to be qualified up to this temperature. The effects of time at this maximum operational temperature on the integrity of the fuel will have to be addressed.

5.3.1.3.1.5 Designer's Alternatives

The designer's alternative is to operate the reactor at lower power levels in order to ensure that the fission product releases at the site boundary are within acceptable limits for normal operation as well as accident conditions.

5.3.1.3.1.6 Selected Design Approach and Explanation

The proposed approach is to qualify PBMR Fuel for NGNP operational conditions as per the current PBMR fuel Testing and Qualification strategy in Subsection 5.2.4.2.

5.3.1.3.1.7 Schedule Requirements

Final results are required to support NGNP operation by the end of 2018.

5.3.1.3.1.8 Priority

Urgency (1 -5):	1
Cost-Benefit (Low, Medium, High):	High
Uncertainty in Existing Data (Low, Medium, High):	High
Importance of New Data (Low, Medium, High):	High

5.3.1.3.1.9 Fallback Position and Consequences of Non-Execution

The fall-back position is to operate the reactor at lower power levels in order to ensure that the fission product releases at the site boundary are within acceptable limits for normal operation as well as accident conditions.

5.3.1.3.2 FUEL HEATING TESTS FOR ACCIDENT CONDITIONS (DDN NHSS-01-02)

5.3.1.3.2.1 Assumptions (to be confirmed by the related R&D program)

It is assumed that the irradiation dose requirements for the NGNP Fuel during accident conditions will be enveloped by the PBMR NGNP Fuel qualification program. Operating the fuel within its qualification envelope will assist in validation of fission product release calculations.

5.3.1.3.2.2 Current Database Summary

Fuel spheres produced in Germany for the HTR-Modul reactor Proof Tests were adopted as the reference fuel design for PBMR fuel. Proof Test fuel spheres were produced in Germany in 1988, and represent the culmination of the German LEU-TRISO fuel development and qualification program conducted from 1981 to 1988. As such, this fuel design represents state of the art German pebble bed fuel development. Furthermore, a large body of experimental data obtained by means of an extensive irradiation and Post-irradiation Examination (PIE) program, covering a wide range of operating parameters, supports the German LEU-TRISO fuel design. This database establishes a well-defined operating envelope for this fuel design covering normal operation and frequent faulted conditions as well as infrequent faulted conditions.

The PBMR Fuel approach is to manufacture fuel spheres that will be equivalent to state-of-the-art fuel spheres produced in Germany for the HTR-Modul Proof Test in 1988. Equivalence is taken to mean that PBMR fuel spheres will be manufactured to the same specification as German Proof Test fuel, using the same manufacturing process, similar direct materials, and a similar quality control systems. This will ensure that PBMR fuel spheres will be equivalent to German Proof Test fuel regarding conformance of all parameters that are controlled during the manufacturing process to the standards established in Germany. This will be demonstrated by performing irradiation tests on a statistically significant number of coated particles in PBMR fuel spheres produced on a qualified production line for the irradiation loads of the PBMR DPP to be constructed at Koeberg, South Africa.

5.3.1.3.2.3 Anticipated Operational Conditions

It is anticipated that the current operational conditions chosen for the NGNP NHSS will result in the fuel operating outside the PBMR Fuel qualification envelope for the PBMR DPP during accident conditions. The worst accident condition is assumed to be a Depressurized Loss

of Forced Cooling (DLOFC) event for which the Prototype Power Level Special Study indicated a maximum fuel temperature of 1679°C after 50 hours. Additional fuel qualification is therefore required.

5.3.1.3.2.4 Summary of Data Needed

Best estimate calculations were performed during the Special Studies and there are uncertainties associated with the calculations provided. From an endurance point of view, temperature is the most important driver and therefore temperature uncertainties when defining irradiation and heating test parameters need to be taken into account. At the moment, the magnitudes of these uncertainties are not clear, and future efforts should endeavor to address these uncertainties. An uncertainty as large as 100°C is currently assumed until the temperature uncertainties has been defined after the PBMR DPP Software Verification and Validation is completed. Therefore, the NGNP irradiation test is based upon a maximum accident temperature of 1780°C. PBMR Fuel will have to be qualified up to this temperature.

5.3.1.3.2.5 Designer's Alternatives

The designer's alternative is to operate the reactor at lower power levels in order to ensure that the fission product releases at the site boundary are within acceptable limits for normal operation as well as accident conditions.

5.3.1.3.2.6 Selected Design Approach and Explanation

The proposed approach is to qualify PBMR Fuel for NGNP operational conditions as per the current PBMR fuel Testing and Qualification strategy in Subsection 5.2.4.2.

5.3.1.3.2.7 Schedule Requirements

Final results are required to support NGNP operation by the end of 2018.

5.3.1.3.2.8 Priority

Urgency (1 -5):	1
Cost-Benefit (Low, Medium, High):	High
Uncertainty in Existing Data (Low, Medium, High):	High
Importance of New Data (Low, Medium, High):	High

5.3.1.3.2.9 Fallback Position and Consequences of Non-Execution

The fall-back position is to operate the reactor at lower power levels in order to ensure that the fission product releases at the site boundary are within acceptable limits for normal operation as well as accident conditions.

5.3.1.3.3 FUEL GRAPHITE IRRADIATION TESTS (DDN NHSS-01-03)

5.3.1.3.3.1 Assumptions (to be confirmed by the related R&D program)

It is assumed that the irradiation load requirements for the NGNP Fuel graphite during accident conditions will be enveloped by the PBMR NGNP Fuel qualification program. Operating the fuel within its qualification envelope will assist in validation of fission product release calculations.

5.3.1.3.3.2 Current Database Summary

Fuel spheres produced in Germany for the HTR-Modul reactor Proof Tests were adopted as the reference fuel design for PBMR fuel. Proof Test fuel spheres were produced in Germany in 1988, and represent the culmination of the German LEU-TRISO fuel development and qualification program conducted from 1981 to 1988. As such this fuel design represents state of the art German pebble bed fuel development. Furthermore, a large body of experimental data obtained by means of an extensive irradiation and Post-irradiation Examination (PIE) program, covering a wide range of operating parameters, supports the German LEU-TRISO fuel design. This database establishes a well-defined operating envelope for this fuel design covering normal operation and frequent faulted conditions as well as infrequent faulted conditions.

The PBMR Fuel approach is to manufacture fuel spheres that will be equivalent to state-of-the-art fuel spheres produced in Germany for the HTR-Modul Proof Test in 1988. Equivalence is taken to mean that PBMR fuel spheres will be manufactured to the same specification as German Proof Test fuel, using the same manufacturing process, similar direct materials, and a similar quality control systems. This will ensure that PBMR fuel spheres will be equivalent to German Proof Test fuel regarding conformance of all parameters that are controlled during the manufacturing process to the standards established in Germany. This will be demonstrated by performing irradiation tests on a statistically significant number of coated particles in PBMR fuel spheres produced on a qualified production line for the irradiation loads of the PBMR DPP to be built at Koeberg, South Africa.

5.3.1.3.3.3 Anticipated Operational Conditions

It is anticipated that the current operational conditions chosen for the NGNP NHSS will result in the fuel operating outside the PBMR Fuel qualification envelope for the PBMR DPP during normal operational conditions.

5.3.1.3.3.4 Summary of Data Needed

Best estimate calculations were performed during the Special Studies and there are uncertainties associated with the calculations provided. From an endurance point of view, temperature is the most important driver and, therefore, temperature uncertainties when defining irradiation and heating test parameters need to be taken into account. At the moment, the

magnitudes of these uncertainties are not clear. An uncertainty as large as 100°C is currently assumed until the temperature uncertainties has been defined after the PBMR DPP Software Verification and Validation is completed. The NGNP graphite irradiation test is based upon a maximum normal operating temperature of 1270°C. PBMR Fuel Graphite will have to be qualified up to this temperature.

5.3.1.3.3.5 Designer's Alternatives

The designer's alternative is to operate the reactor at lower power levels in order to ensure that the fission product releases at the site boundary are within acceptable limits for normal operation as well as accident conditions.

5.3.1.3.3.6 Selected Design Approach and Explanation

The proposed approach is to qualify PBMR Fuel for NGNP operational conditions as per the current PBMR fuel Testing and Qualification strategy in Subsection 5.2.4.2.

5.3.1.3.3.7 Schedule Requirements

Final results are required to support NGNP operation by the end of 2018.

5.3.1.3.3.8 Priority

Urgency (1 -5):	1
Cost-Benefit (Low, Medium, High):	High
Uncertainty in Existing Data (Low, Medium, High):	High
Importance of New Data (Low, Medium, High):	High

5.3.1.3.3.9 Fallback Position and Consequences of Non-Execution

The fall-back position is to operate the reactor at lower power levels in order to ensure that the fission product releases at the site boundary are within acceptable limits for normal operation as well as accident conditions.

5.4 FUEL COMPLEXITY, RISKS AND FUTURE STUDIES

5.4.1 Complexity and Risks

It is clear from the preceding sub-sections that a substantial knowledge data base exists in terms of the application of the fuel spheres in the DPP and NGNP. This statement is supported by tests performed during the German Pebble Bed Reactor program, in which several tests were extended to higher temperatures, burn-up and neutron fluence than the operating and accident conditions required by the DDP, and even the NGNP. Even though empirical data for conditions exceeding conditions envisaged during the NGNP Power Level Special Studies are available, some uncertainties exist in terms of the number of samples involved in the testing. Furthermore, the data presented need to be verified.

It is maintained that the efforts for the DDP will automatically yield more certainty in terms of fuel performance during normal operation as well as accident conditions of the NGNP. This implies that the current data base, as well as strengthening/supporting empirical data from the DPP project, will satisfy assumptions currently made as far as NGNP Special Studies are concerned.

Another uncertainty that might arise is the ability of the fuel manufacturers to supply fuel that is equal or superior to the German fuel. However, the substantial care and effort currently being put into the DPP project will ensure that the fuel being supplied does adhere to, or surpass the specifications of the German fuel, and any additional requirements/specifications arising from additional test data.

Therefore, the DPP project can be considered as a most supportive project in terms of the uncertainties of the NGNP.

Thus, in hindsight, factors currently being considered risks should rather be viewed as complexities that will, and may already be managed in such a way that their risk factor is or will be substantially decreased or eliminated in the near future. Furthermore, since these complexities are being considered and addressed in the current DPP fuel characterization program, the general level of complexity in terms of fuel can be considered a decreasing concern.

5.4.2 Future Studies

It is proposed to use the same Fuel design as being used for the PBMR DPP and no additional Future Studies have been identified that do not form part of the normal engineering effort.

Although not relevant to the NGNP demonstration plant, future studies on Fuel Manufacturing will benefit the NGNP commercial plants. Studies to consider are the use of higher enriched fuel, automated fuel manufacturing processes and the ability to have an advanced QA/QC process for the automated commercial Fuel plant.

REFERENCES

[5-1] David Petti, "An Overview of the DOE Advanced Gas Reactor Fuel Development and Qualification Program", ARWIF Oak Ridge, TN, Feb. 16, 2005. (Presentation material provided at the following web site: http://www.nea.fr/html/science/meetings/ARWIF2004/0.05.pdf)

[5-2] Dieter Matzner, "PBMR Project Status and the Way Ahead", Paper A04, 2nd International Topical Meeting on High Temperature Reactor Technology, Beijing, China, September 22-24, 2004.

[5-3] CJ Pierce and CE Athon, "The NFS Advanced Fuel Development Laboratory," American Nuclear Society Meeting, Washington, D.C., November 2005.

[5-4] TecIAEA-TECDOC-978, November 1997.

[5-5] PBMR FUEL PERFORMANCE ENVELOPE AND TEST PROGRAM, 039116 REV 1, PBMR, Centurion, February 2007.

LIST OF ASSUMPTIONS

NONE

APPENDICES

APPENDIX 5A FINAL DESIGN REVIEW PRESENTATION TO BEA

Section 5
Reactor Fuel

Johan Venter

Preconceptual Design Report
90% Design Review

May 8-10, 2007

P B M R

Westinghouse NGNP Team

P B M R

Fuel Overview

- Description
- Fuel Testing and Qualification
- Additional Testing for NGNP
- Fuel Supply
- Design Data Needs
- Summary & Conclusions

Fuel Description (1)

- Fuel Matrix Graphite
- Fuel-Free Graphite
- TRISO-Particle
  - Fuel Kernel
  - Buffer Layer
  - Inner Pyrocarbon Layer
  - SiC Layer
  - Outer Pyrocarbon Layer

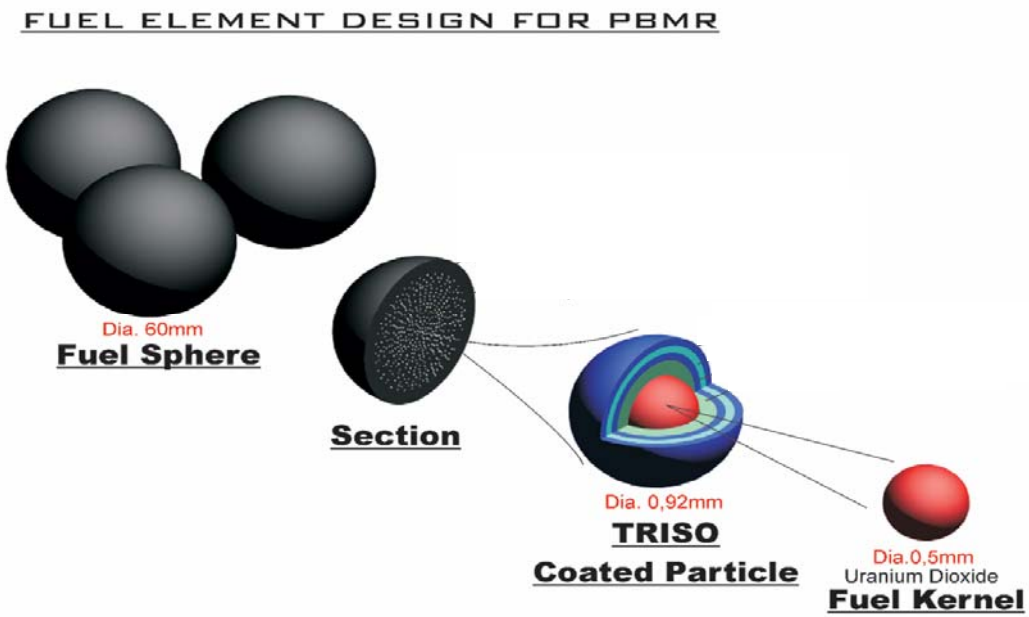

P B M R

Fuel Description (2)

- **Fuel Kernel**
  - Produce thermal power by means of fission reactions
  - Retains some of the fission products
- **Buffer layer**
  - Absorb recoil fission product nuclides. Provides void volume for fission product retention to control internal pressure, Accommodate kernel swelling
- **Inner Pyrocarbon layer**
  - Protects kernel from corrosion, Provides interface for SiC, Delays fission product transport, Impart residual compressive stress in the SiC layer during radiation
- **Silicon Carbide Layer (SiC)**
  - Provides primary load bearing layer,
  - Provides primary radionuclide barrier
- **Outer Pyrocarbon Layer**
  - Provides protection for SiC, Provides protection against chemical attack

Fuel Performance Parameters

- **Normal Operating Condition Parameters**
  - Temperatures
  - Burn-up
  - Fast fluence
- **Off-Normal (Accident) Condition Parameters**
  - Temperatures

P B M R

Fuel Operating Conditions

Parameter (limit)	Units	PBMR-DPP	NGNP
Power level	MWt	400	500
Burn-up	MWd/tHM	95 723	94 079
Fast fluence	10^{21} cm^{-2}	2.7	2.7
Fuel residence time	Days	964	758
Normal operation T_{avg}	^{o}C	829	840
Normal operation T_{max}	^{o}C	1071	1168
DLOFC T_{max}	^{o}C	1499	1668

Comparison of Designs to German Fuel Performance Data (Fast Fluence vs Burnup)

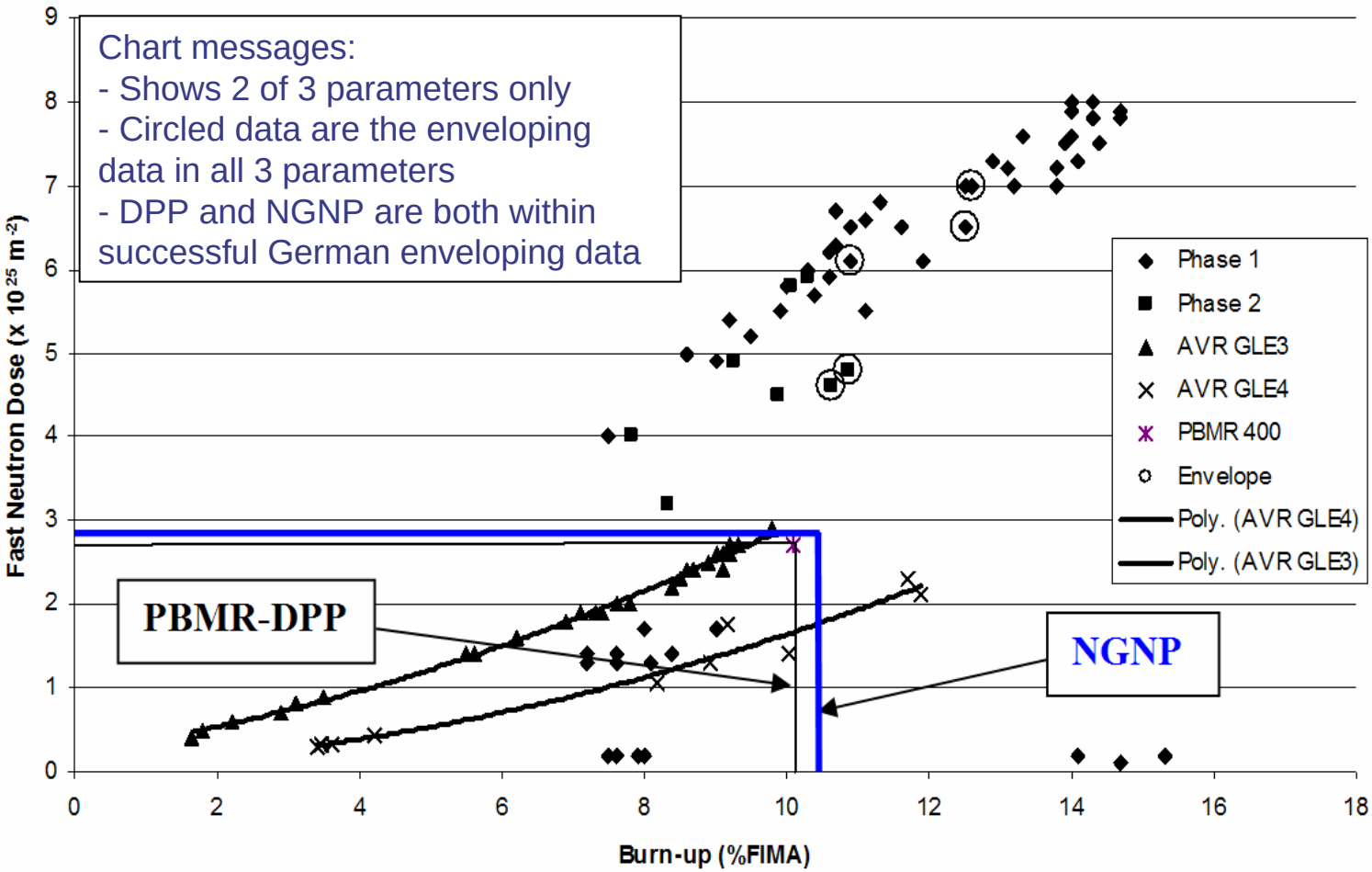

Slide 7

Westinghouse NGNP Team

Comparison of Designs to German Fuel Performance Data (Fast Fluence vs Temp)

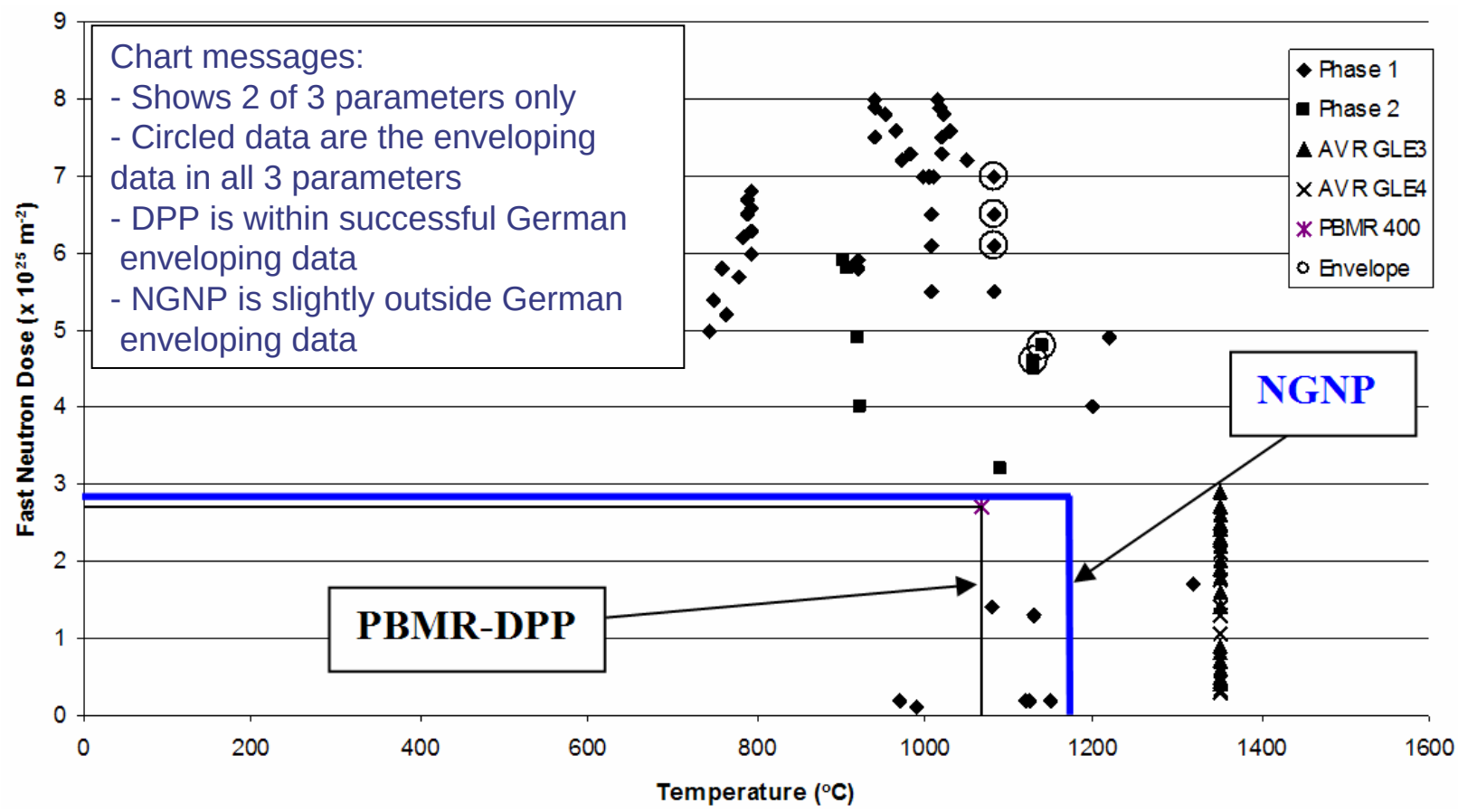

P B M R

Comparison of Designs to German Fuel Performance Data (Burn-up vs Temp)

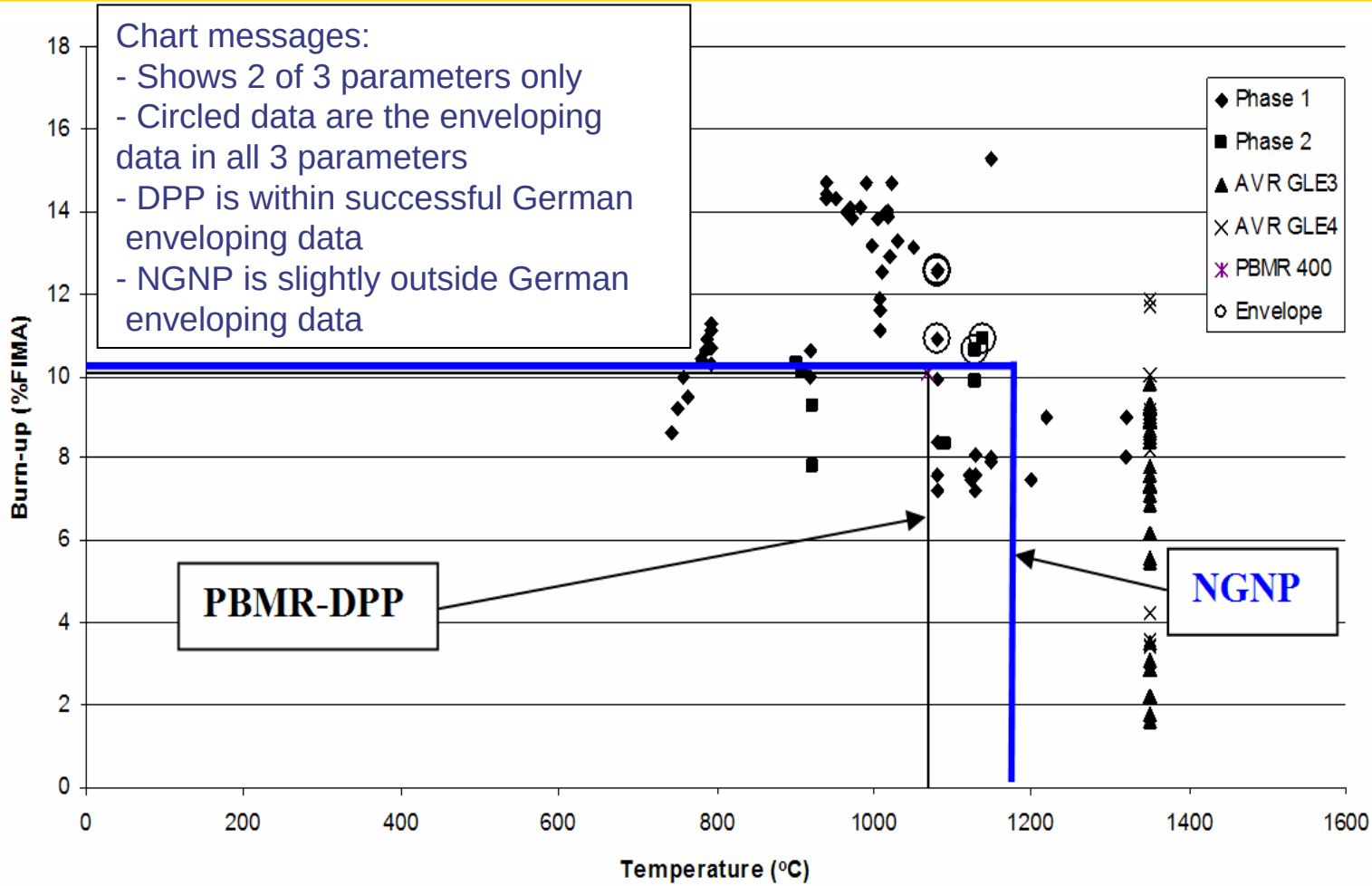

Westinghouse NGNP Team

P B M R

Off-Normal Fuel Performance is Acceptable for Long Times at Elevated Temperatures

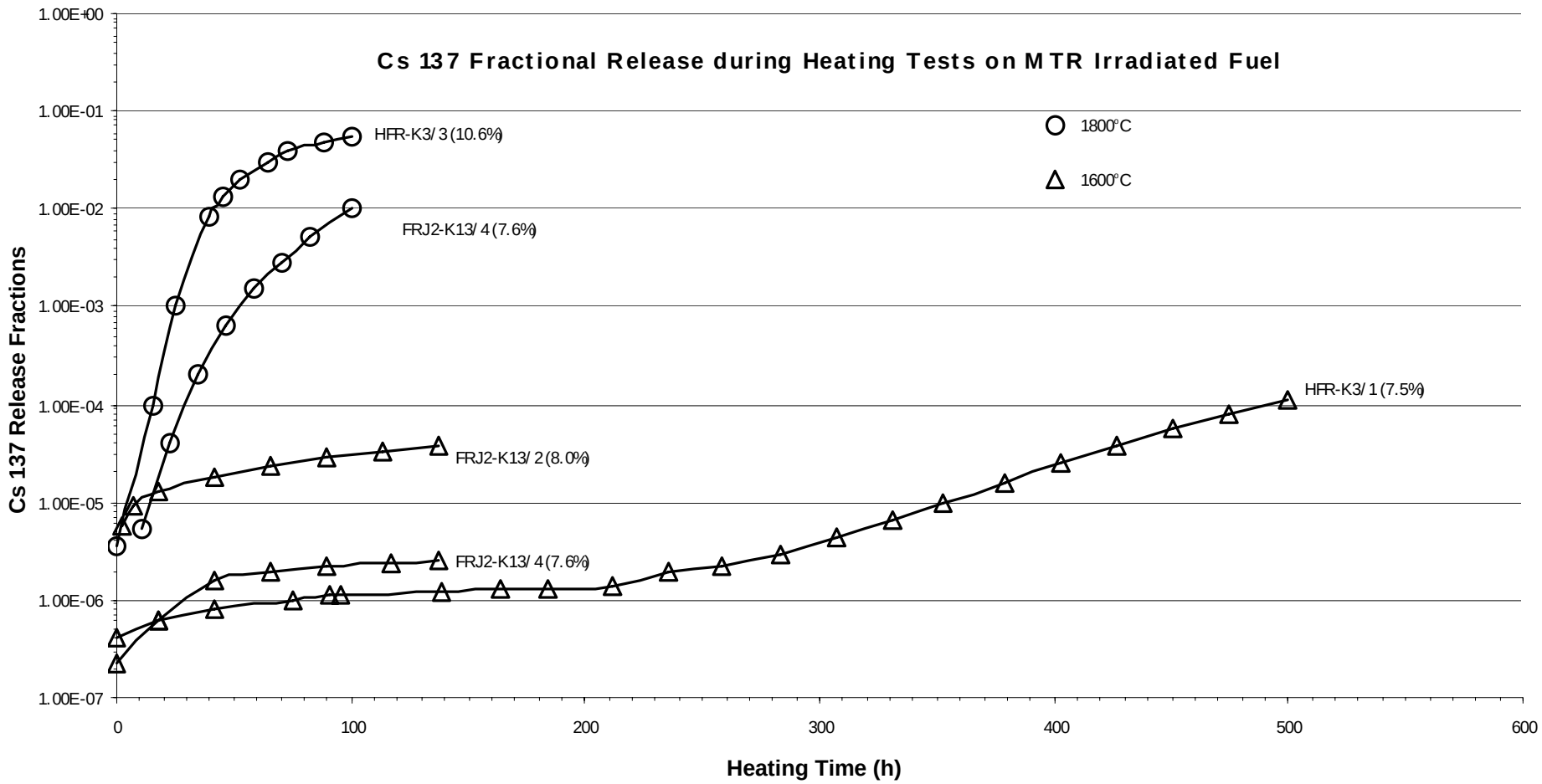

Slide 10

Westinghouse NGNP Team

Relation of German Data NGNP DLOFC Expected Temperatures

- As shown, isothermal heating tests show that 1600ºC is needed for hundreds of hours for incremental fuel failure of 10^{-4}
- Further temperatures at 1800ºC are required for tens to hundreds of hours for significant (percent level) incremental fuel failure
- Expected PBMR NGNP (at 500MWt) peak fuel temperatures are predicted to exceed 1600ºC for short times (several hours, not tens of hours) less than 10% of the core
- For the 500MWt PBMR NGNP core, less than 10% of the core will experience temperatures higher than 1600ºC for several hours (not tens of hours).

Fuel Design Data Needs

- **DDN NHSS-01-01 - Fuel irradiation tests for normal operation conditions**
  - Temperatures up to 1270°C
- **DDN NHSS-01-02 - Fuel heating tests for accident conditions**
  - Temperatures up to 1780°C
- **DDN NHSS-01-03 - Fuel graphite irradiation tests**
  - Temperatures up to 1270°C

Recommended NGNP Fuel Supply Strategy (1)

- **Meet NGNP Project requirements**
  - Schedule
  - Cost
  - Supply reliability and quality
- **Use proven fuel supply – available from PBMR**
- **Use experienced team with broad experience covering all aspects of fuel production, transportation and utilization**
  - Westinghouse
  - PBMR (Pty) Ltd
  - Nuclear Fuel Services

Use Proven Fuel Supply – Available From PBMR

- **NGNP supply strategy**
  - Provide NGNP plants with fuel from the fully qualified PBMR fuel production facilities in South Africa until the US market demand would support a domestic commercial manufacturing facility
  - PBMR Pilot Fuel Plant will be available in 2014 time frame to begin NGNP fuel production
  - Sufficient time to produce fuel for both DPP and NGNP

- **Benefits**
  - Proven NGNP fuel supply available in the near term
  - Minimal schedule, cost, quality and supply reliability risk
  - Allows for gradual development of US manufacturing capability

Summary & Conclusions

- **To meet the NGNP schedule for operation in 2018, the Westinghouse NGNP team recommends:**
  - Using fuel from a proven supplier, PBMR (Pty) Ltd
  - Collaborating with INL to ensure that test data envelope NGNP conditions
  - Collaboration to develop domestic manufacturing capability

NGNP-06-RPT-001 **May 2007**
Revision 0

NGNP and Hydrogen Production Preconceptual Design Report

SECTION 6: HEAT TRANSPORT SYSTEM

APPROVALS

Function	Printed Name and Signature	Date
Author	Scott R. Penfield, Jr., PE Technology Insights	May 15, 2007
Reviewer	Fred Silady Technology Insights	May 15, 2007
Approval	Dan Mears Technology Insights	May 15, 2007

Westinghouse Electric Company LLC
Nuclear Power Plants
Post Office Box 355
Pittsburgh, PA 15230-0355

©2007 Westinghouse Electric Company LLC
All Rights Reserved

LIST OF CONTRIBUTORS

Name and Organization	Date
Scott Penfield Technology Insights	May 2007
Phil Rittenhouse Technology Insights	May 2007
George Hayner Technology Insights	May 2007
Michael Correia PBMR	May 2007

BACKGROUND INTELLECTUAL PROPERTY

Section	Title	Description
NONE		NONE

REVISION HISTORY

RECORD OF CHANGES

Revision No.	Revision Made by	Description	Date
0	Scott R. Penfield, Jr., PE Technology Insights	Initial Issue	May 15, 2007

DOCUMENT TRACEABILITY

Created to support the following Document(s)	Document Number	Revision
NGNP and Hydrogen Production Preconceptual Design Report	NGNP-01-RPT-001	0

TABLE OF CONTENTS

LIST OF TABLES **6-6**
LIST OF FIGURES **6-7**
6 HEAT TRANSPORT SYSTEM **6-8**
SUMMARY AND CONCLUSIONS **6-8**
INTRODUCTION **6-12**
6.1 SUMMARY DESCRIPTION **6-13**
6.2 SYSTEM DESCRIPTION **6-16**
6.2.1 PRIMARY HEAT TRANSPORT SYSTEM **6-19**
6.2.1.1 System Functions and Requirements 6-19
6.2.1.1.1 Functions 6-19
6.2.1.1.2 Requirements 6-19
6.2.1.2 System Description 6-21
6.2.1.2.1 PHTS Integration 6-21
6.2.1.2.2 IHX Details 6-23
6.2.1.2.3 Circulator Details 6-27
6.2.1.2.4 PHTS Valve 6-27
6.2.1.2.5 PHTS Piping 6-27
6.2.1.3 Major System Interfaces 6-28
6.2.1.4 System Operation 6-29
6.2.2 SECONDARY HEAT TRANSPORT SYSTEM **6-30**
6.2.2.1 System Functions and Requirements 6-30
6.2.2.1.1 Functions 6-30
6.2.2.1.2 Requirements 6-30
6.2.2.2 System Description 6-32
6.2.2.2.1 SHTS Integration 6-32
6.2.2.2.2 SHTS Circulator 6-32
6.2.2.2.3 SHTS Piping 6-32
6.2.2.2.4 SHTS Flow Coupling and Mixing 6-33
6.2.2.3 Major System Interfaces 6-33
6.2.2.4 System Operation 6-34
6.3 HTS DESIGN DEVELOPMENT NEEDS **6-35**
6.3.1 INTERMEDIATE HEAT EXCHANGER – METALLIC **6-35**
6.3.1.1 Functions 6-35
6.3.1.2 Key Requirements 6-35
6.3.1.3 Design Data Needs 6-36
6.3.2 INTERMEDIATE HEAT EXCHANGER – CERAMIC/COMPOSITE **6-75**
6.3.2.1 Functions 6-75
6.3.2.2 Key Requirements 6-75
6.3.2.3 Design Data Needs 6-76
6.3.3 SHTS HELIUM-MIXING CHAMBER **6-89**

6.3.3.1 Functions 6-89
6.3.3.2 Key Requirements 6-89
6.3.3.3 Design Data Needs 6-89

6.3.4 HIGH TEMPERATURE DUCTS AND INSULATION 6-92
6.3.4.1 Functions 6-92
6.3.4.2 Key Requirements 6-92
6.3.4.3 Design Data Needs 6-93

6.4 HTS COMPLEXITY, RISKS, AND FUTURE STUDIES 6-96

6.4.1 COMPLEXITY AND RISKS 6-96

6.4.2 FUTURE STUDIES 6-97
6.4.2.1 Cooling and Insulation of HTS Vessels and Piping 6-97
6.4.2.2 Design Basis for IHX Heat Transfer Surface 6-98
6.4.2.3 Independent HPS/PCS Operation 6-99
6.4.2.4 Confirm Temperature Split between IHX A and IHX B 6-99
6.4.2.5 Confirm Suitability of Alloy 800H for IHX B 6-100
6.4.2.6 Helium Mixing Performance and Reliability 6-100
6.4.2.7 Tritium Transport 6-100

REFERENCES 6-101

LIST OF ASSUMPTIONS 6-102

APPENDICES 6-103

APPENDIX 6A FINAL DESIGN REVIEW PRESENTATION TO BEA 6-103

LIST OF TABLES

Table 6.3-1: Design Data Needs for Metallic IHX 6-36
Table 6.3-2: Design Data Needs for Ceramic IHX 6-76

LIST OF FIGURES

Figure 6.1-1: Recommended NGNP Architecture 6-13
Figure 6.2-1: HTS Coupling Concept 6-17
Figure 6.2-2: HTS Operating Parameters 6-18
Figure 6.2-3: Arrangement of Major NGNP Components Including HTS 6-22
Figure 6.2-4: Major NGNP Components Including HTS – Plan View 6-22
Figure 6.2-5: Major NGNP Components Including HTS – Elevation View 6-23
Figure 6.2-6: IHX A (Higher-Temperature Section) 6-24
Figure 6.2-7: HX B (Lower-Temperature Section) 6-25
Figure 6.2-8: Compact Heat Exchanger Core Layout 6-26
Figure 6.2-9: High-Temperature Duct Insulation System 6-28

6 HEAT TRANSPORT SYSTEM

SUMMARY AND CONCLUSIONS

The Heat Transport System (HTS) serves to transport thermal energy from the Reactor, where it is produced, to the Hydrogen Production System (HPS) and the Power Conversion System (PCS), where it is utilized or, in certain plant operating modes, rejected. The Next Generation Nuclear Plant (NGNP) HTS comprises a Primary Heat Transport System (PHTS) and Secondary Heat Transport System (SHTS) that are coupled by an Intermediate Heat Exchanger (IHX). By definition, the IHX is a component of the PHTS. Other components of the PHTS include the primary piping and internal ducts, the primary circulator and a check valve that prevents reverse flow when the Core Conditioning System (CCS) is in operation.

The SHTS comprises the secondary piping, its associated internal ducts, insulation and supports, the secondary circulator and a helium-mixing chamber. In the PBMR-based NGNP Demonstration Plant, helium from the secondary side of the IHX is split into two paths. One-fourth of the flow is routed to the Process Coupling Heat Exchanger (PCHX), which is the interface with the HPS. The remaining flow is routed directly to the Steam Generator (SG) of the PCS via the mixing chamber. After transferring thermal energy to the HPS, the stream exiting the PCHX is rejoined to the main stream at the helium-mixing chamber. A fixed orifice, upstream of the mixing chamber in the main helium flow path, is used to establish the relative flow rates to the PCHX and steam generator.

The overall HTS architecture was developed as a result of the High Temperature Process Heat Transfer and Transport Special Study (Ref. [6-1]). The recommended configuration is an indirect series architecture in which the HPS utilizes energy available at the highest temperatures and a bottoming Rankine cycle is used for power generation. The bases for this selection are summarized as follows:

- High-Temperature Thermal Energy Utilization
  - In commercial applications, hydrogen production is maximized when high-temperature thermal energy (>~700ºC) is utilized in the process coupling heat exchanger (PCHX)
  - Implies PCS should be series bottoming cycle vs. parallel to PCHX
- Brayton Cycle Power Maneuvering
  - Brayton cycle power maneuvering is based on combination of inventory (pressure) control and bypass control
  - Implies high and varying differential pressures across IHX and, in some configurations, the PCHX
  - Not compatible with metallic heat exchangers at temperatures of interest

- Rankine Cycle Flexibility
  - Rankine cycle provides flexibility of over range of SHTS temperatures and power levels
  - For commercial plants, allows efficient utilization of lower temperatures
  - For the NGNP Demonstration Plant, allows near-independent operation of the PCS vs. HPS and provides flexibility for multiple varying process heat and/or steam demonstrations
- Helium Return Temperature
  - Return temperatures lower with Rankine cycle
  - Allows use of existing technology base for return piping and circulators
- Overall, minimizes risk not directly associated with high-temperature process heat mission

The high temperature components of the HTS, and particularly the heat transfer core of the IHX, pose significant design and development challenges for the NGNP; however, much foundation work has already been done. For metallic IHX options, the starting point for addressing materials challenges will be earlier work in Germany and both earlier and on-going work in Japan on high-temperature tubular heat exchangers and associated materials (References [6-2] and [6-3]). The compact recuperator of the PBMR Demonstration Power Plant (DPP) provides an initial design basis, albeit at lower temperatures. For advanced heat exchanger materials, the IHX development will build on work underway within the Nuclear Hydrogen Initiative (Reference [6-4]).

In the earlier HTS Special Study (Reference [6-1]), it was determined that the IHX should be split into high and low temperature sections, designated IHX A and IHX B. The high temperature section, IHX A, would be designed for replacement within the plant lifetime, whereas IHX B would be designed as a full lifetime component. In the special study, the maximum temperature to be seen by IHX B was given as 850ºC, assumed to be a temperature at which the reference material, Alloy 617, would allow lifetime operation without replacement. Further consideration during the remainder of preconceptual design resulted in the tentative selection of a lower temperature breakpoint, 760ºC, which would allow the use of established ASME Section III materials, based on Subsection NH for IHX B. The reference material specifically recommended for IHX B is Alloy 800H. Both the breakpoint temperature and the IHX B material are to be confirmed through future studies during conceptual design.

The HTS piping also represents a critical focus of design and development. The designs of the highest temperature sections of the PHTS piping are based upon the high-temperature gas cycle piping of the South Africa PBMR Demonstration Power Plant, which utilizes both insulation and active cooling. The NGNP-specific design is complicated by the higher reactor outlet temperature (950ºC versus 900ºC) and the higher temperatures of potential active cooling sources (350ºC at the PHTS circulator outlet versus 120°C at the high-pressure compressor outlet in the Demonstration Power Plant (DPP)). The complexities associated with active cooling also imply high costs. For this reason, passive insulation has been tentatively selected for the highest temperature sections of the SHTS. The technical and economic trade-offs of active cooling

versus passive insulation for both the PHTS and SHTS will be addressed through future studies during conceptual design.

As implied in the above discussion, significant Design Data Needs (DDNs) are associated with the IHX. Given both the critical nature and technical challenges associated with this component, multi-pronged development paths have been identified. The present reference for IHX A is a compact metallic heat exchanger design that uses Alloy 617 as the reference material. In addition to the operating temperature being above the established useful range for this material, the thin heat transfer cross-sections associated with compact exchangers pose difficulties with the large grain sizes associated with Alloy 617 of the current reference specification. DDNs identified with this material include both optimization of the current specification and extending the database to the required temperature range. An alternate material, Alloy-230, has also been identified for further optimization and characterization. Additional DDNs are identified to extend the available design methods and associated codes and standards to the higher temperature range required for the NGNP IHX. Performance verification of high temperature IHX modules is also identified in DDNs as a basis for confirming material suitability and design methods, as well as supporting the development of codes and standards.

At best, metallic materials are marginal for the IHX application at the highest temperatures of interest. For this reason, the parallel development of ceramic and/or composite heat exchangers has also been recommended and identified within the HTS DDNs. Other DDNs address design and technology gaps associated with the internal components of the highest temperature piping sections and the SHTS helium-mixing chamber.

Consistent with the above, the complexities and risks associated with the HTS are found in the high temperature piping, the IHX and the SHTS helium-mixing chamber. The risks associated with the IHX are mainly related to the shortcomings of metallic materials at the highest temperatures in the PHTS and SHTS. These risks will be addressed by Research and Development R&D) in response to DDNs, through the qualification of an alternate material, Alloy-230 and, ultimately, through the development of heat exchangers based on higher temperature materials, such as ceramics and/or composites. Future studies have been recommended to confirm the intermediate temperature between IHX A and IHX B and the tentative material selection for IHX B.

The complexities associated with insulation and cooling of piping and ducts in the highest temperature sections of the PHTS and SHTS pose both technical risks and high costs. These will be addressed both by R&D in response to DDNs, and by future studies to optimize the insulation and/or cooling designs and associated material selections.

Finally, the SHTS helium-mixing chamber, which is unique to the NGNP, poses technical challenges related to both the high-temperatures of the streams to be mixed and the concerns with thermal cycling effects. These challenges will be addressed through further design and R&D in response to DDNs.

In conclusion, the HTS is a key system of the NGNP with significant technical barriers to its realization. The scope of these barriers and the challenges associated therewith have been narrowed and focused by reference design selections, notably the two-section IHX. Where technical issues are unavoidable, multiple design and development paths have been established to minimize and/or manage risks.

INTRODUCTION

This section of the Preconceptual Design Report describes the Heat Transport System (HTS), which transports and transfers thermal energy from the Reactor to the Hydrogen Production System (HPS) and/or Power Conversion System (PCS). A general overview of PHTS is provided in Subsection 6.1. The HTS is organized with two major subsystems, the Primary HTS (PHTS) and Secondary HTS (SHTS). These are described within Subsection 6.2. The HTS poses significant technical challenges, and the associated Design Data Needs (DDNs) are outlined within Subsection 6.3. Subsection 6.4 discusses HTS complexities and risks and identifies future studies that are recommended for the subsequent conceptual design phase. Acronyms used in this section are defined in an appendix to this Preconceptual Design Report.

The HTS, and particularly the Intermediate Heat Exchanger (IHX), represents one of the more significant technical challenges in the further design and development of the NGNP Demonstration Plant. A conclusion of the HTS Special Study (Reference [6-1]), is that the realization of an effective and economic IHX design will require extending both high-temperature materials technology and compact heat exchanger design.

The potential of Gas-Cooled Reactors in high-temperature process heat applications has long been appreciated and, accordingly, the technical issues associated with heat transport and process coupling have been the subject of much earlier research and development, particularly in Germany and Japan (References [6-1] and [6-3]). For metallic IHX options, the starting point for addressing materials challenges will be earlier work in Germany in conjunction with the Process Nuclear Plant (PNP) Project and work in Japan supporting an advanced high-temperature nuclear steel-making concept. More recently, the Japanese have constructed and are operating the High-Temperature Test Reactor (HTTR), a test bed for high-temperature process heat applications. Both the German and Japanese development work is based on high-temperature tubular heat exchangers and associated materials.

The compact recuperator of the PBMR Demonstration Power Plant (DPP) represents the first application of compact heat exchangers in a nuclear application, albeit at lower temperatures. Extensions of this design are being considered for the NGNP Demonstration Plant IHX. For advanced heat exchanger materials, the IHX development will build on work presently underway within the Nuclear Hydrogen Initiative (NHI) (Reference [6-4]). While primarily centered on the process coupling heat exchanger for hydrogen production, the NHI work is largely applicable to the NGNP IHX as well.

6.1 SUMMARY DESCRIPTION

The preconceptual design of the NGNP Heat Transport System (HTS) is documented in this section of the NGNP Preconceptual Design Report. The HTS design is based on the results of the High Temperature Process Heat Transfer and Transport Special Study (Ref. [6-1]), which recommended an indirect series architecture for coupling the reactor to the HPS and PCS (Figure 6.1-1). In this configuration, a bottoming Rankine cycle is used for power generation.

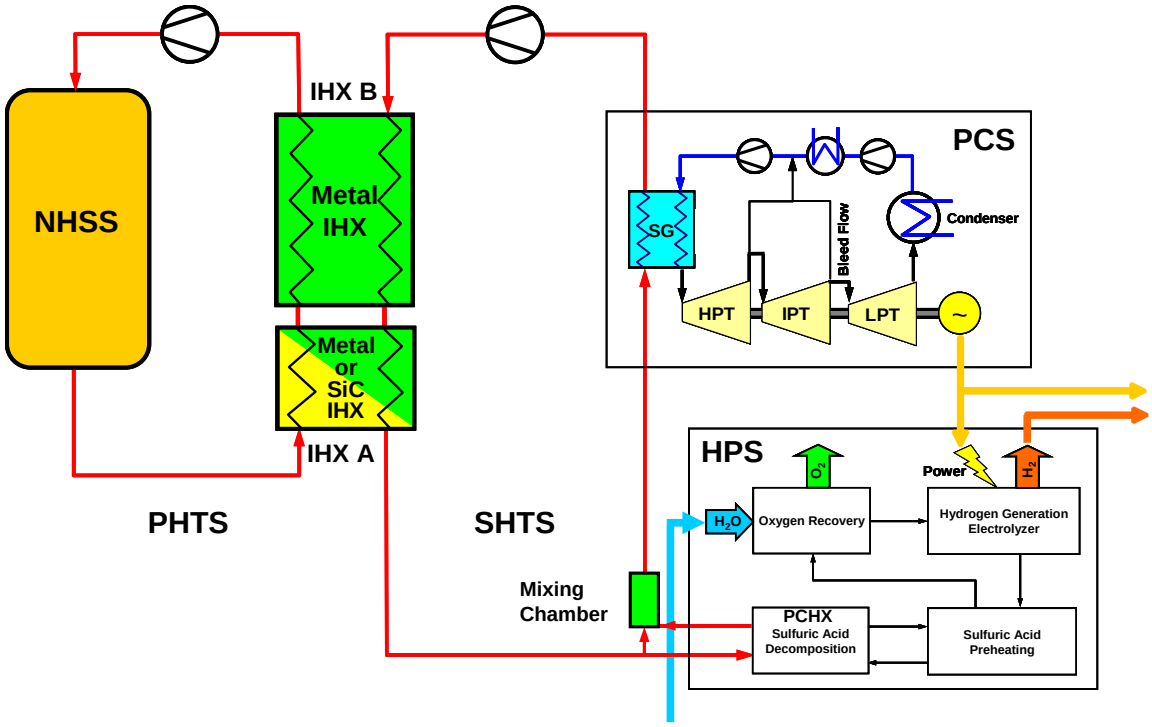

Figure 6.1-1: Recommended NGNP Architecture

The principal bases for the recommended NGNP heat transport architecture are summarized in the following points:

- **High-Temperature Thermal Energy Utilization**

  In commercial applications, hydrogen production is maximized when all of the available high-temperature thermal energy (>~700ºC) is utilized in the process coupling heat exchanger (PCHX). If the PCS is placed in parallel with the PCHX, a portion of the highest temperature thermal energy is diverted for power production and is not available to the hydrogen process. Further, with the PCS in parallel, an alternate use must be found for the lower temperature energy exiting the HPS. These considerations imply that the PCS should be integrated as a series bottoming cycle vs. being parallel to the PCHX. It is further noted that the efficiency of the Rankine cycle is less sensitive than the Brayton cycle to the reduced temperature exiting the HPS in a series bottoming configuration.

- **Brayton Cycle Power Maneuvering**

  The control of Brayton cycle power level is typically based on a combination of inventory (pressure) control and bypass control. Inventory control is implemented by removing or adding helium to the circuit containing the Brayton cycle and has the advantage of maintaining high efficiency levels over a wide power range. Its principal disadvantage is a relatively long time constant for effecting changes. For more rapid power maneuvering, bypass control is utilized, albeit with a significant efficiency penalty. For these reasons, a combination of the two methods is typically utilized. For the NGNP, either of these control schemes implies high and varying differential pressures across IHX and, in some configurations, the PCHX. This is evaluated to be incompatible with metallic heat exchangers in the temperature range of interest.

- **Flexibility of Rankine Cycle**

  The Rankine cycle was found to have considerable flexibility for utilizing thermal energy over a wide range of temperatures and power levels. For commercial process heat applications, notably hydrogen production, this flexibility allows efficient utilization of energy at lower temperatures and the ability to integrate the hydrogen and power production sections. For the NGNP Demonstration Plant, application of the Rankine cycle in a series architecture allows near-independent operation of PCS versus the HPS. Essentially any amount of thermal energy can be utilized in the process heat section, limited only by the acceptable temperature range for the process. For thermochemical water splitting, this range is ~ 0–200MWt. The balance can be utilized for power production. When the HPS is not operating, up to the full output of the reactor can be used for power production.

- **Helium Return Temperature**

  While not a key factor in the selection process, the lower helium return temperature associated with the Rankine cycle provides advantages with respect to the HTS piping and circulators. In the range of 300ºC to 350ºC, the current circulator experience base is applicable and conventional LWR pressure vessels and piping can be employed.

In summary, the recommended NGNP heat transport architecture provides an optimum basis for demonstrating commercial hydrogen production and maximum flexibility for demonstration of process heat applications in the NGNP. It is notable with respect to the latter that technical risk is minimized and focused on technologies that are essential to hydrogen production.

In documenting the NGNP Preconceptual Design herein, the HTS is structured within two major subsystems, the Primary HTS (PHTS) and the Secondary HTS (SHTS). It is envisioned that the contents of this section will be further evolved during the conceptual design phase to provide stand-alone System Design Descriptions (SDDs) for the PHTS and the SHTS.

Within the above framework, major system functions are specified and the resulting requirements are noted and described as appropriate in Section 6.2. Additionally, this section defines and describes the overall configuration and operation of the HTS, including major subsystems and components. The HTS configuration is based on the results of the Special Studies (Activity 20), notably Special Study 20.3, which addressed the HTS. The rationale for design selections for various components and subsystems is also provided and discussed herein. The functional interfaces of the HTS with the other portions of the overall NGNP are noted and discussed at the system level.

Based on all of the above, Design Data Needs (DDNs) are identified in Section 6.3 as input to the Technology Development Plan (PCDR Section 16). Future studies addressing identified issues and risks are recommended in Section 6.4.

6.2 SYSTEM DESCRIPTION

The HTS is comprised of a primary helium heat transport loop, the PHTS, and a secondary helium heat transport loop, the SHTS. The basic concepts of these two circuits are shown schematically in Figure 6.2-1. Operating conditions are shown in Figure 6.2-2, which is repeated from PCDR Section 3. The PHTS (components shown in red in Figure 6.2-1) includes the primary circuit piping, including internal ducts, insulation and external supports, the Intermediate Heat Exchanger (IHX), including the IHX vessel and associated internal and external supports and insulation, plus the primary circulator. The IHX is arranged in two sections, IHX A and IHX B that are differentiated by their operating temperatures and choice of material. The heat transfer core of IHX A, the higher temperature section, is expected to be replaced within the plant lifetime and is designed for ease of access. IHX B, which operates at lower temperatures, is designed as a plant lifetime component. The SHTS (components shown in green in Figure 6.2-1) includes the secondary circuit piping, along with its internal ducts, insulation and external supports, the secondary circulator, plus a fixed orifice and a helium-mixing chamber (described further below) that are included in the NGNP Demonstration Plant, but are not required in the NGNP Commercial Plant. Also shown in the figure are the delivery interfaces from the SHTS to the Process Coupling Heat Exchanger (PCHX) of the Hydrogen Production System (HPS) and Steam Generator (SG) of the Power Conversion System (PCS).

The PHTS accepts primary coolant helium from the reactor at 950ºC and delivers it to the high temperature primary inlet of IHX A. The primary coolant helium exits the low temperature section of IHX B at nominally 337ºC and then passes through a 10.8 MW circulator where its temperature is increased by compression to nominally 350ºC. The helium returns directly to the reactor at this latter temperature. The mass flow rate in the PHTS is ~160 kg/s. Pressures vary slightly around the PHTS loop but are in the range of 8.6 to 9.0 MPa. Approximately 508 MWt of energy is transferred to the SHTS from the PHTS during the passage of the primary coolant helium through the IHX units.

The SHTS takes secondary coolant helium from the IHX at nominally 900ºC and delivers approximately one-fourth of the flow to the PCHX (50 MWt) and the remainder to the SG (~470 MWt) when both the PCHX and SG are operative. Alternatively, the full flow and power (including circulator power inputs) go to the SG if the hydrogen plant is not operating. In the former case, the exit flow from the PCHX at 659ºC is mixed with the 900ºC helium from the IHX in the helium-mixing chamber, before the full flow enters the SG at 840ºC. After the secondary loop helium exits the SG at nominally 272ºC, it passes through the SHTS circulator (12.3 MW) where it is heated by compression to 287ºC before returning to the IHX B secondary inlet. Mass flow in the SHTS is equivalent to that in the PHTS and system pressure varies from about 8.1 to 8.5 MPa, depending on position in the secondary coolant loop. Overall, the PHTS and the SHTS can be considered essentially pressure balanced with a very slight bias toward higher pressure in the PHTS. The slight primary to secondary bias allows rapid detection of small primary-to-secondary leaks via radionuclide monitoring. This reference direction of bias will be confirmed during conceptual design.

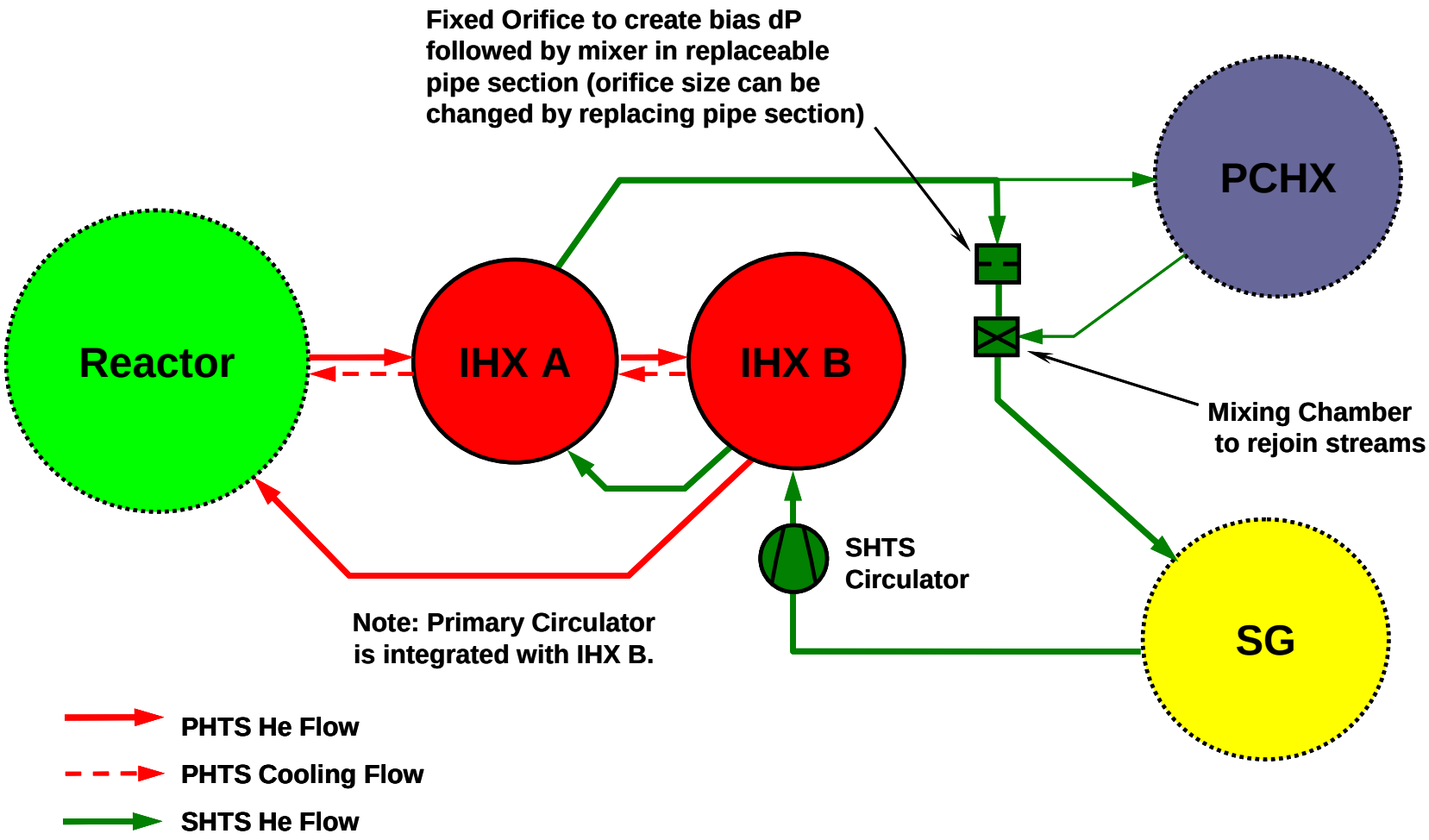

Figure 6.2-1: HTS Coupling Concept

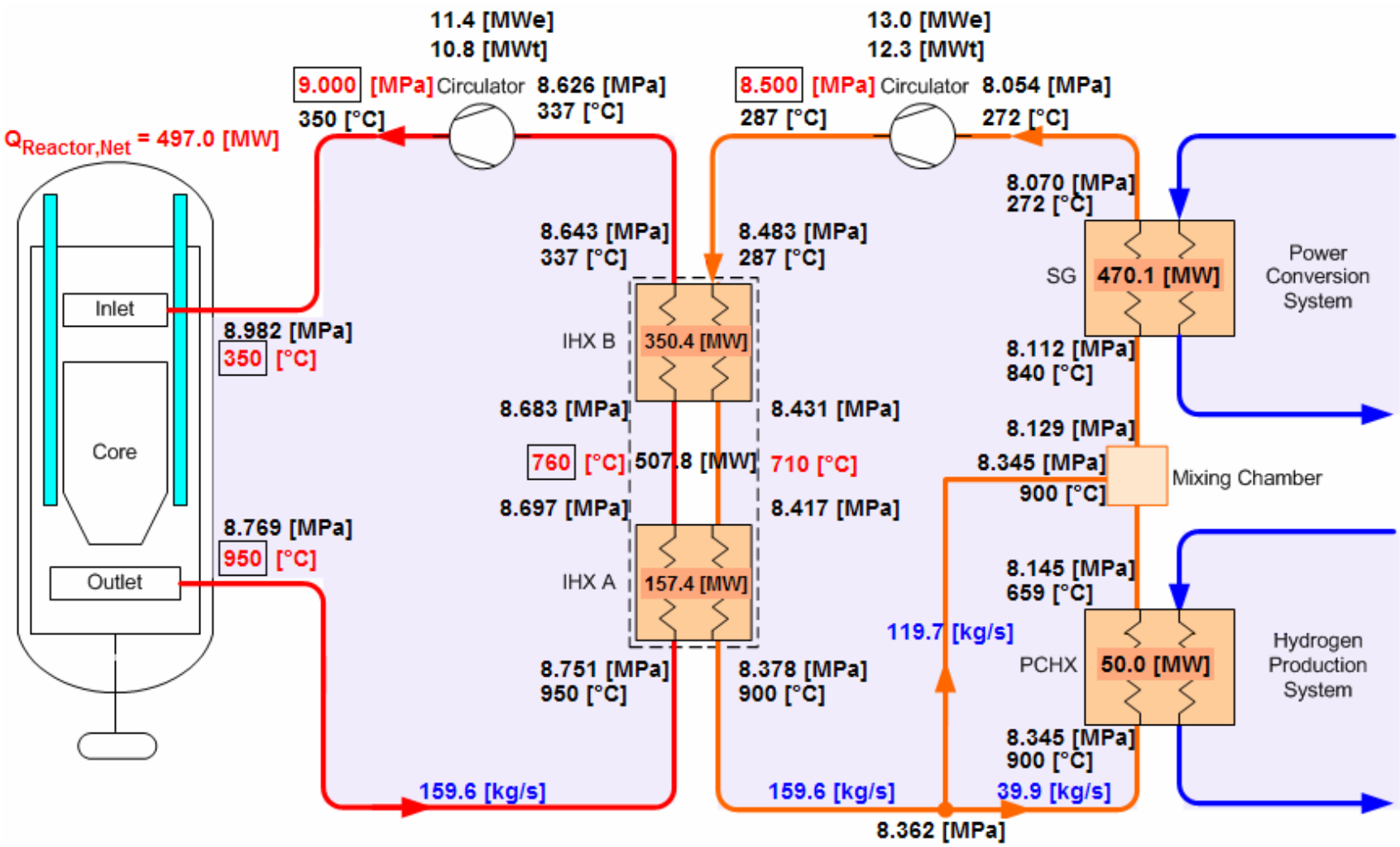

Figure 6.2-2: HTS Operating Parameters

6.2.1 Primary Heat Transport System

6.2.1.1 System Functions and Requirements

6.2.1.1.1 Functions

The major functions of the Primary Heat Transport System are:

- Transport and transfer thermal energy from the reactor to the SHTS via the IHX during all modes of operation in which the HTS is required to be functional, i.e.:
  - Normal production operations with energy supplied to both the HPS and the PCS or to the PCS alone.
  - Starting up/shutting down with energy transport to an ultimate heat sink within the PCS.
  - Certain maintenance conditions with energy transport to an ultimate heat sink within the PCS.
  - Specified transients and off-normal conditions with energy transport to an ultimate heat sink within the PCS.
- Maintain control of radionuclides.
- Protect the reactor from process-related hazards.

6.2.1.1.2 Requirements

The following requirements include plant level design selections that have been passed down to the Heat Transport System.

<u>System Configuration and Essential Features</u>

The PHTS design shall have one main coolant loop with helium as the coolant fluid.

An IHX shall be located within the main loop and will be comprised of a full-lifetime low-temperature section designated as IHX B and a replaceable high-temperature section (IHX A). IHX A and IHX B shall be housed in separate steel vessels.

The main circulator shall be located at the cold leg outlet on the top of the IHX B vessel.

A self-acting helium check valve shall be integrated with the main circulator to limit backflow through the main loop. Backup provisions shall be incorporated for manual actuation of the check valve.

Provisions shall be made for pressure relief of the PHTS at [9.9] MPa.

Operational Requirements

The PHTS, except for the high-temperature core structure of IHX A (i.e., components for which the temperature exceeds 760ºC), shall be designed for an operating life of 60 years. The high-temperature core of IHX A shall be designed for a minimum operating life of [10] years.

The PHTS shall be designed to transfer nominally 510 MWt (including primary circulator power) from the reactor core to the SHTS. Nominal helium temperature to the primary loop inlet of IHX A shall be 950ºC; return flow to the reactor shall be nominally 350ºC.

The PHTS shall be essentially pressure-balanced with the SHTS at nominally 9 MPa but with a slight bias to higher pressure in the PHTS.

Structural Requirements

The PHTS shall be designed to mitigate the consequences of internally generated missiles from rotating machinery.

The PHTS shall be designed to resist acoustic pressure levels and flow-induced forces resulting from operation of the circulator from 0 to 120% speed.

Environmental Requirements

Those portions of the PHTS exposed to primary coolant helium shall be designed to resist chemical impurities within the limits [TBD] specified for the primary coolant.

Instrumentation and Control Requirements

Instrumentation and control requirements are addressed in PCDR Section 4, Nuclear Heat Supply System.

Maintenance Requirements

The PHTS shall incorporate features that limit the amount of time the reactor is required to be removed from service for unscheduled maintenance of PHTS components to, on average, [TBD] hours/year.

Those portions of the PHTS located within or comprising the primary helium boundary shall be designed to function continuously and without scheduled maintenance that would require man access.

The nominal interval between scheduled maintenance outages for the PHTS shall be [5] years.

PHTS Components having lifetimes of less than 60 years, including the high-temperature core sections of IHX A, shall be designed for replacement within normally scheduled maintenance outages.

6.2.1.2 System Description

The overall characteristics, major features, and configuration of the PHTS and its major components are discussed and described in this subsection.

6.2.1.2.1 PHTS Integration

The PHTS comprises a single loop transporting thermal energy (nominally 508 MWt) from the reactor and primary circulator via an IHX to the SHTS (see Figure 6.2-1 and Figure 6.2-2). Pressure in the loop is nominally 9 MPa and is essentially pressure-balanced, but with a slight bias toward higher pressure relative to the SHTS. The mean helium coolant temperatures upstream and downstream of the IHX are 950ºC and 337ºC, respectively. The IHX unit in the PHTS is subdivided into a high-temperature section identified as IHX A and a lower temperature section denoted as IHX B. These sections are housed in separate vessels arranged in-line with the reactor (see Figure 6.2-3, Figure 6.2-4: and Figure 6.2-5). Thermal growth in the pressure boundary pipe between the reactor and IHX A and between IHX A and IHX B is accommodated by mounting IHX A and IHX B on a sliding support arrangement. The sliding support arrangement is similar to that used between the reactor vessel and the steam generators in Light Water Reactor (LWR) plants.

Temperature protection for the primary coolant pressure boundary (ducts and vessels) of the PHTS will be provided by various combinations of active and passive cooling that will depend on the specific component and operating conditions. As indicated in Figure 6.2-1, active cooling is presently envisioned for the ducting between the reactor and IHX A and between IHX A and IHX B. The IHX A vessel will also be actively cooled. Active cooling will be accomplished by diverting a fraction of the return flow from the circulator outlet; it will also involve the use of insulation internal to the pressure boundary for the hottest components. Passive cooling, appropriate for the cooler return portions of the pressure boundary, will be accomplished using internal insulation only.

A single circulator, top mounted on the IHX B vessel, is employed for the PHTS. A “flapper-type”, self-actuated check valve is integrated with the circulator to limit backflow through the main loop. This consideration is particularly important when cooling is being provided by the Core Conditioning System (See PCDR Section 4).

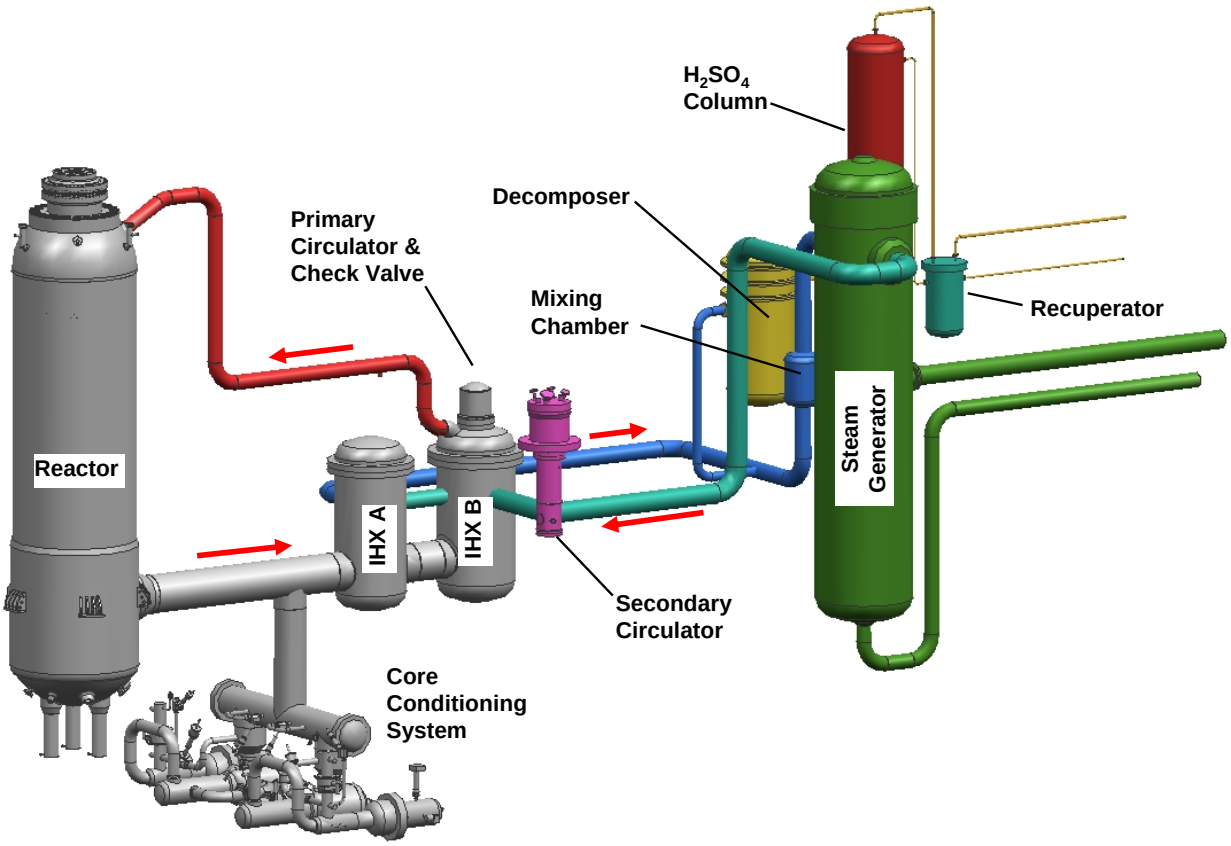

Figure 6.2-3: Arrangement of Major NGNP Components Including HTS

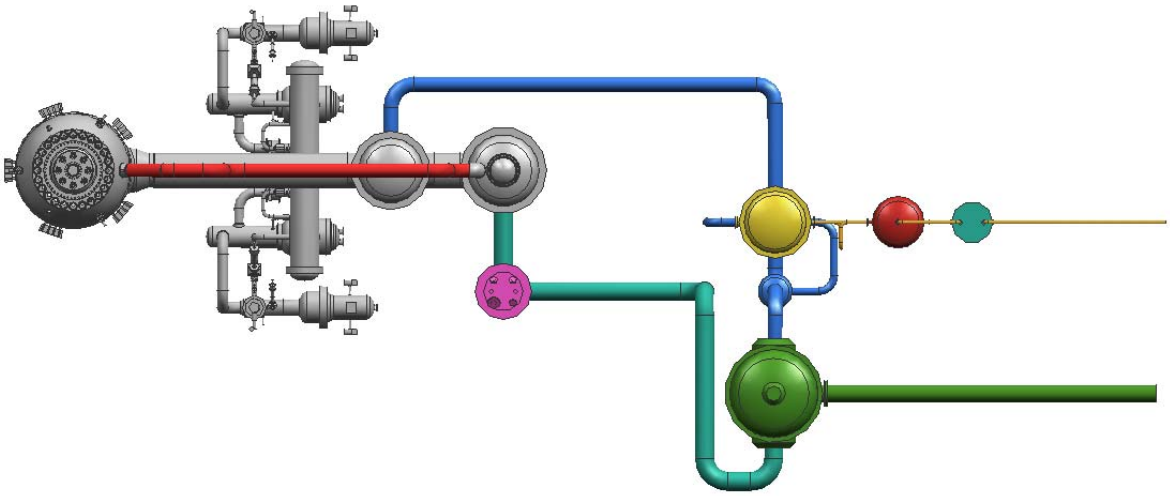

Figure 6.2-4: Major NGNP Components Including HTS – Plan View

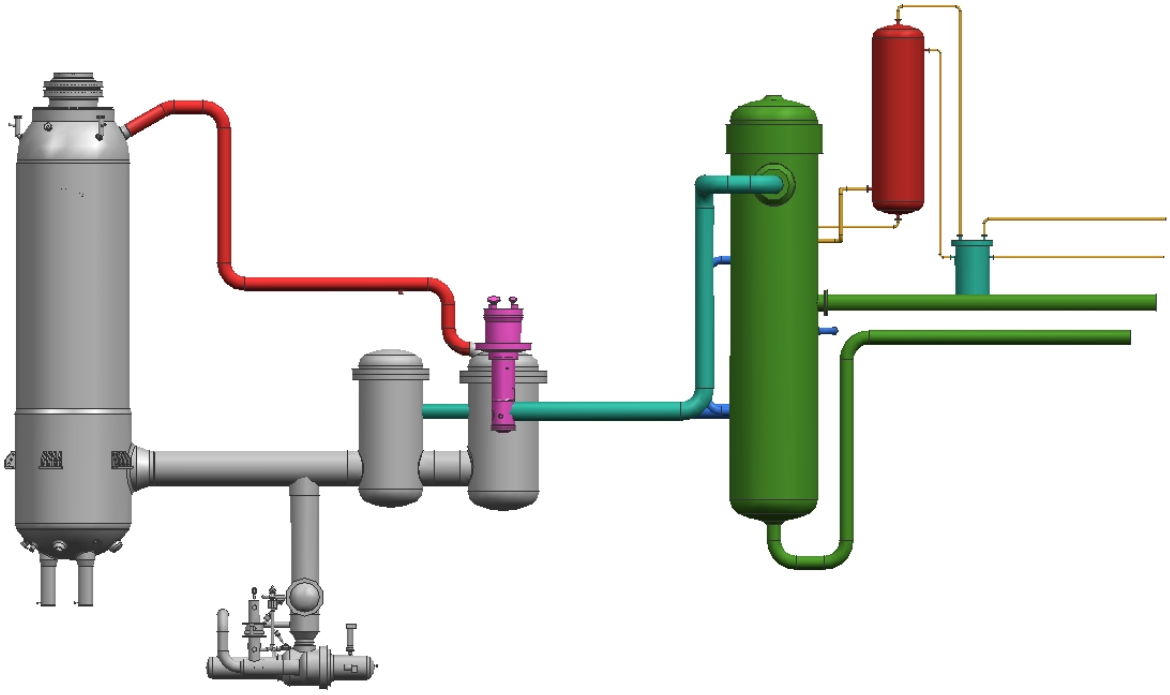

Figure 6.2-5: Major NGNP Components Including HTS – Elevation View

6.2.1.2.2 IHX Details

The preconceptual designs of IHX A and IHX B are depicted in Figure 6.2-6 and Figure 6.2-7, respectively. Special Study 20.3 provided the background and rationale for splitting the IHX into high (IHX A) and low temperature (IHX B) sections. Among these was the concern that materials operating lifetimes of 60 years at the highest temperatures required could not be demonstrated and confirmed. Although both sections could conceivably be housed in a single vessel at lower cost, the decision was to go with separate vessels for IHX A and IHX B. This provides the best access for inspection and maintenance, ease of replacement of the non-full-life high-temperature section (IHX A), and the potential for retrofitting of new-design IHX core sections (e.g., ceramic).

The only material under active consideration for the IHX vessels is the same low alloy steel used in LWR pressure vessels (SA-508, Grade 3, Class 1/SA-533, Grade B, Class 1). It is fully qualified for long-term operation at temperatures to 371ºC and has a solid basis of experience as the material of choice for LWR pressure vessels. The temperature of the IHX A vessel walls will be held to <350ºC using active cooling supplied via the PHTS cold return, plus internal insulation. Internal insulation alone should suffice for the IHX B vessel. The PHTS circulator and check valve are to be mounted on the top of the IHX B vessel.

IHX A Notes:

1. Heat transfer modules based on DPP Recuperator compact heat exchanger design.
2. IHX A vessel and primary pressure boundary ducts between Reactor and IHX A and between IHX A and IHX B are actively cooled with 350ºC helium diverted from circulator outlet (see IHX B).
3. Vertical support of all internal components is via secondary helium inlet header, which is radially keyed to pressure vessel to provide vertical and lateral support.
4. Lateral support of heat transfer cores is via keys to pressure vessel
5. Pinned vertical support attachments between secondary inlet header and primary inlet header and secondary outlet header

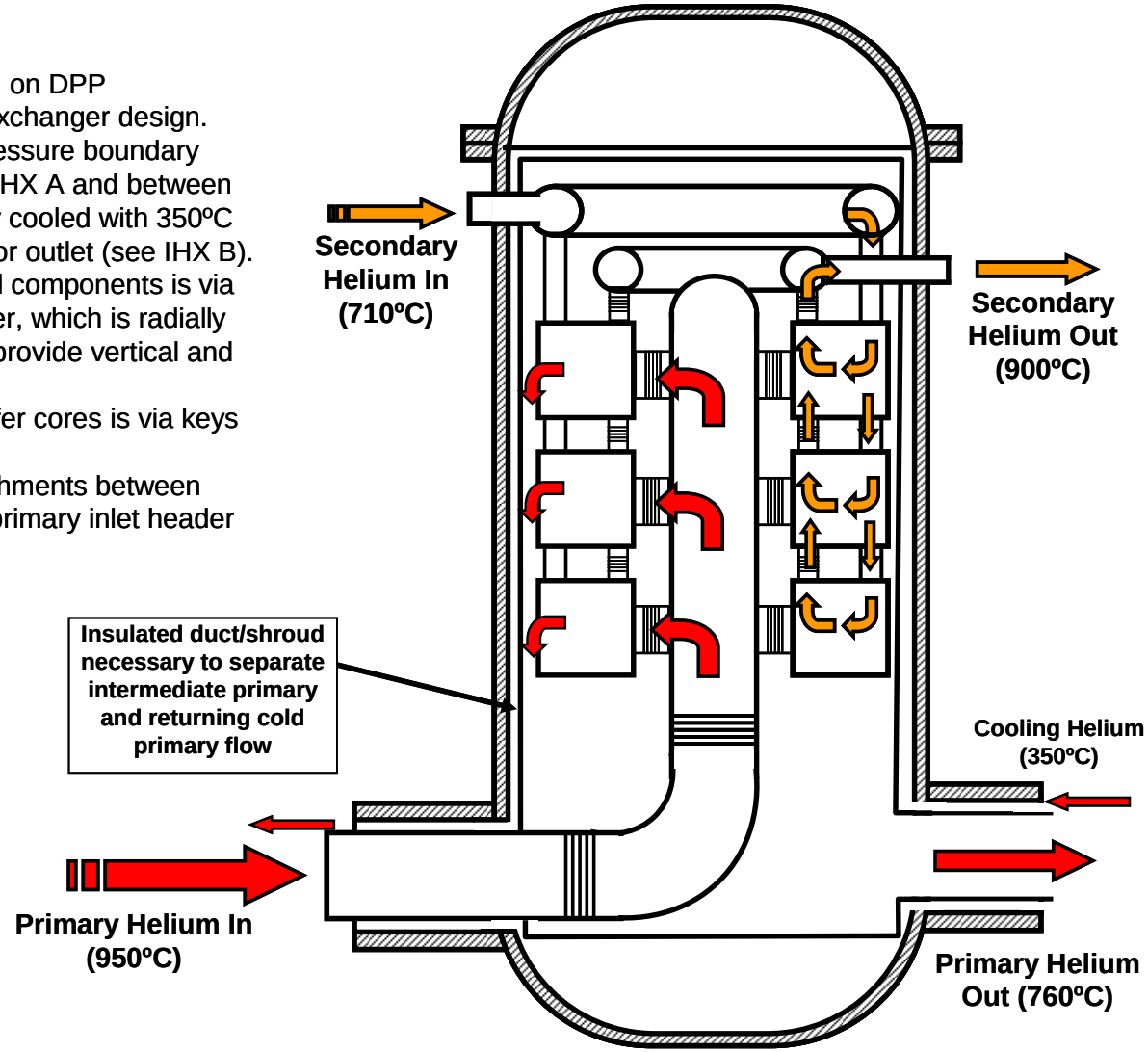

Figure 6.2-6: IHX A (Higher-Temperature Section)

IHX B Notes:

1. Heat transfer modules based on DPP Recuperator compact heat exchanger design.
2. Primary inlet from IHX A actively cooled by helium diverted from circulator outlet.
3. Other pressure boundary components are passively insulated.
4. Vertical support of all internal components is via secondary helium inlet header, which is radially keyed to pressure vessel to provide vertical and lateral support.
5. Lateral support of heat transfer cores is via keys to pressure vessel.
6. Pinned vertical support attachments between secondary inlet header and primary inlet header and secondary outlet header.

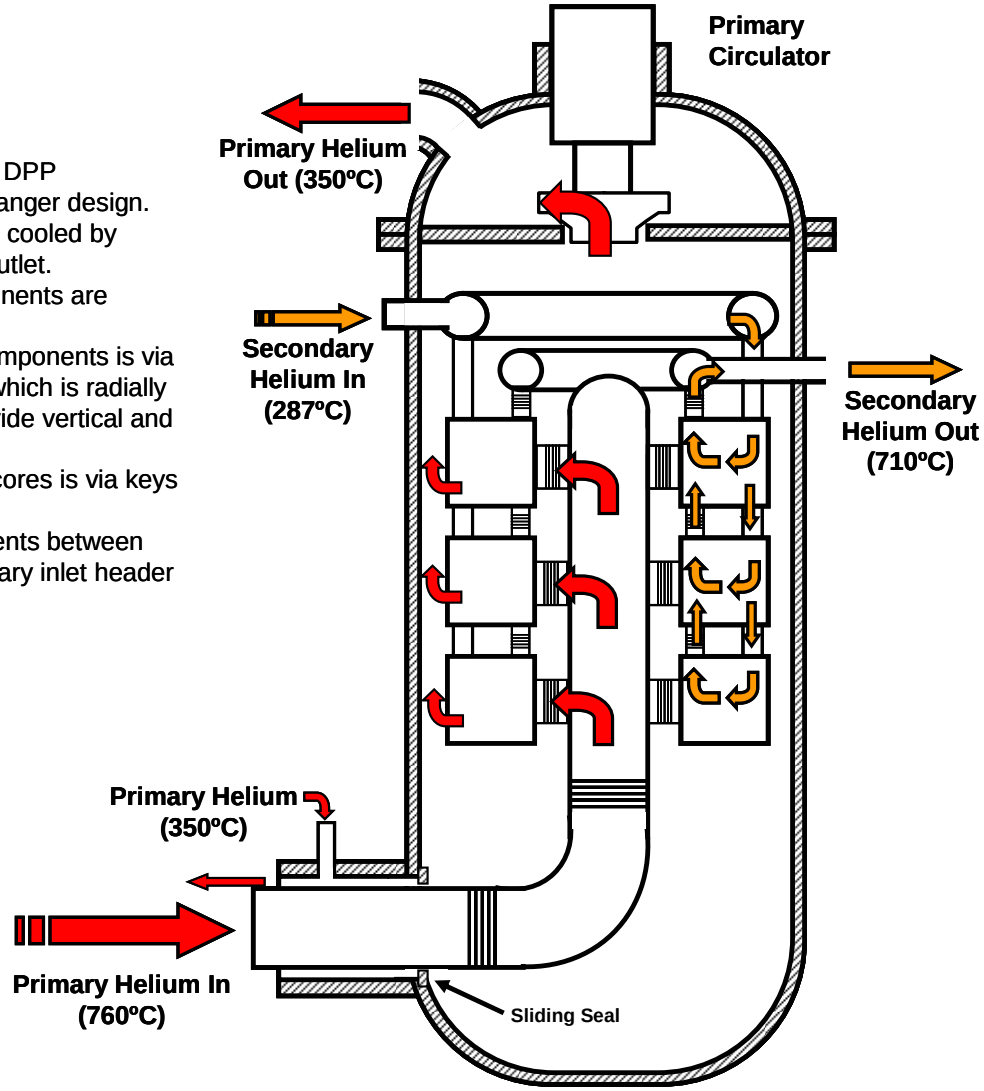

Figure 6.2-7: HX B (Lower-Temperature Section)

Both tubular and compact designs were considered for the core of IHX A. A tubular design would be more rugged and has the potential to provide a longer and more reliable life. However, a tubular design will result in a very large heat exchanger, estimated to be on the order of 6-7 times that of a compact heat exchanger by weight (t/MWt) (Refs. [6-5], [6-6]), whereas a compact design will tend to minimize size and reduce cost. The compact design was, therefore, chosen as the initial reference; however, the tradeoffs between tubular and compact designs (e.g., reliability, economics, susceptibility to dust, etc.) will be further evaluated during Conceptual Design. Only the compact deign was considered for IHX B. Figure 6.2-8 provides a schematic of the arrangement of inlet and outlet coolant flows, internal ducting, and heat exchanger modules for the compact core design.

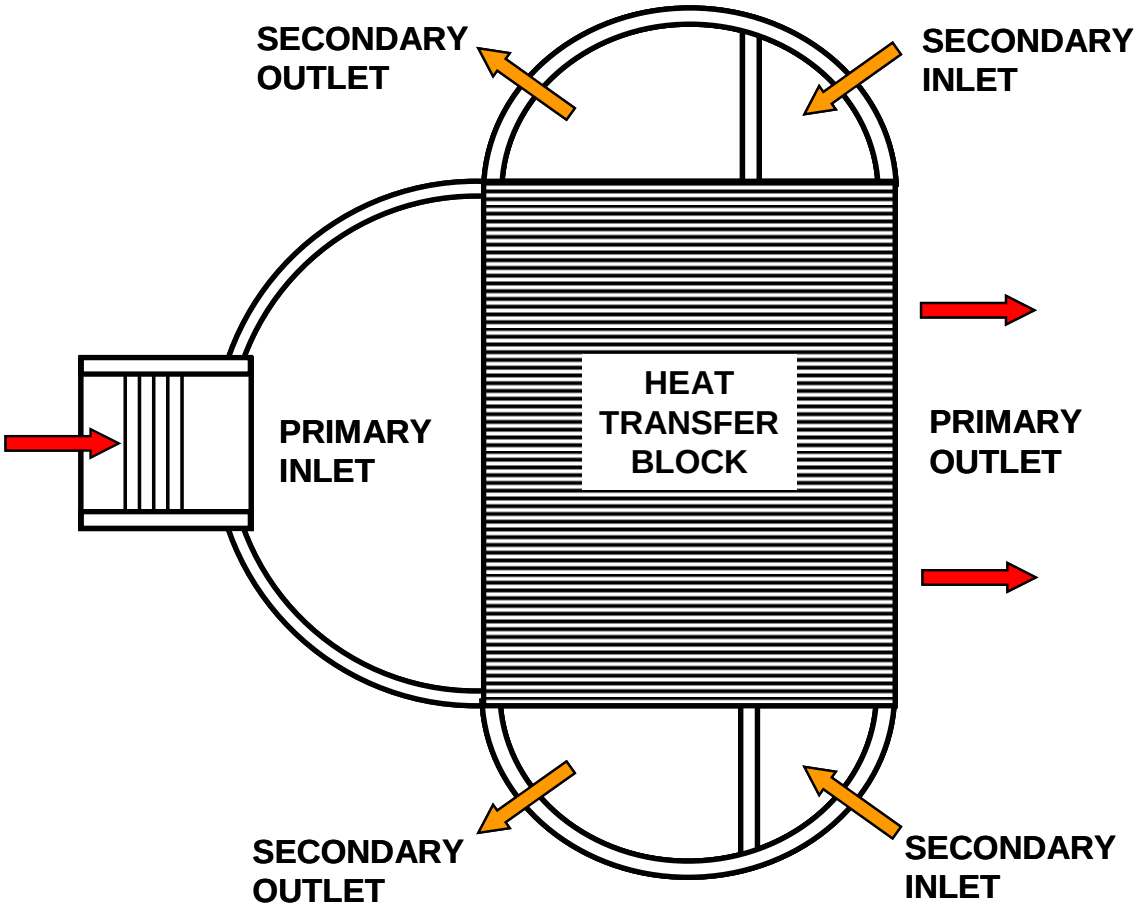

Figure 6.2-8: Compact Heat Exchanger Core Layout

The original design of the PHTS, as conceived in the HTS Special Study, was based upon 850ºC as the maximum temperature in the low-temperature portion of the IHX (IHX B). Further consideration has been given to lowering the temperature in IHX B to a point that would permit the use of a fully qualified material under ASME Section III, NH. On this basis, the option tentatively selected for IHX B is Alloy 800H/HT at 760ºC. A future study relating to active

versus passive cooling and insulation and materials options will be performed to confirm this selection. IHX A, operating with metal temperatures of 760ºC to 950ºC, requires the use of Alloy 617 or Alloy 230 for the heat exchanger core. As the full life (60 year) performance of these materials cannot currently be guaranteed at 850ºC and higher, the heat exchanger core of IHX A will be designed for replacement. A minimum life of [10] years has been specified for the IHX using Alloy 617. The actual life will be determined through experience with the first unit and/or further qualification of the materials. A heat exchanger core of a ceramic material is also being considered as a replacement for the metal heat exchanger core of IHX A.

6.2.1.2.3 Circulator Details

The electric-driven PHTS circulator (10.8 MW) operates at nominally 350ºC and 9 MPa (exit conditions) to provide for circulation of the primary coolant helium to and from the reactor. The location options considered for the circulator were on top of the lower-temperature IHX B vessel or in the PHTS piping. Placing the circulator in the IHX B vessel simplifies piping and interfaces and eliminates the need for a separate circulator pressure boundary. However, it does somewhat reduce the access to the IHX internals. A location in the piping provides optimum access for circulator maintenance. All things considered, placement of the circulator on the IHX B vessel was deemed the better option. A side versus top location of the circulator on the IHX vessel was considered as well; the side location would provide a potential configuration for multiple circulators if needed. However, a single circulator of the required 10.8 MW is evaluated to be feasible and the top location has been selected as the reference.

6.2.1.2.4 PHTS Valve

A self-actuated “flapper-type” check valve is to be provided to limit backflow through the PHTS main cooling loop when the Core Conditioning System is in operation. The valve is to be integrated with the circulator.

6.2.1.2.5 PHTS Piping

Two different PHTS piping designs, depending on location in the main coolant loop, will exist. The piping between the reactor vessel outlet and IHX A and between IHX A and IHX B will be of a straight “rigid” design, as noted earlier. More specifically, the pipes that form the pressure boundary will be allowed to expand freely and to move the IHX A and IHX B vessels on sliding supports, the Reactor Pressure Vessel being fixed. This concept, which is typical of support systems used in LWRs, allows the use of relatively short, straight pipes. Actual flow of the 950ºC helium from the reactor outlet to IHX A and the 760ºC helium from IHX A to IHX B occurs in internal concentric ducts separated by layers of insulation, as shown in Figure 6.2-9. The inner, highest surface temperature, portion of this concentric duct arrangement will be free-floating axially; the pressure containing internal duct that surrounds it will use bellows to accommodate thermal expansion. The insulation between these ducts (not shown in the figure) provides for minimization of both heat loss and the temperature of the outer duct material. A flow of cold return PHTS helium (350ºC), diverted from the circulator outlet, will be directed

through the annulus between the outer duct and the pressure boundary pipe. This high-temperature piping design is similar to that applied in the PBMR DPP; however, both the Reactor outlet gas temperature and cooling gas temperature are higher in the PBMR NGNP design. For this reason, the internal surfaces of the pressure boundary piping may contain an additional layer of insulation and additional qualification will be required for the inner liner. A future study, considering the piping in all of the locations in the PHTS and the SHTS, will be conducted to evaluate passive versus active cooling and associated insulation and pipe wall material options.

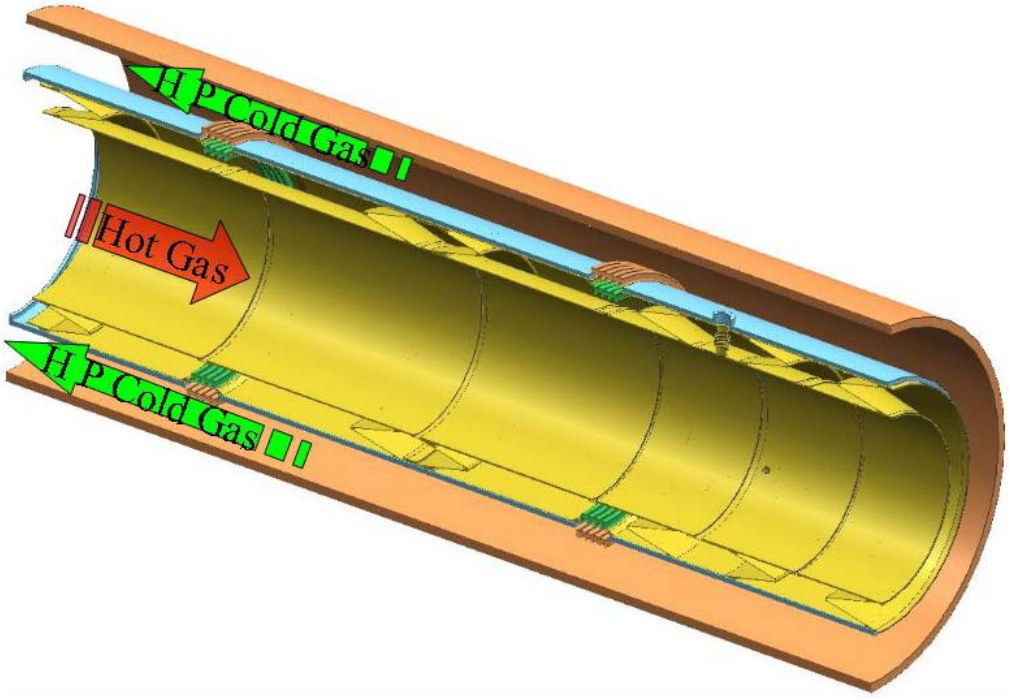

Figure 6.2-9: High-Temperature Duct Insulation System

Finally, the return piping from IHX B to the reactor inlet, which operates at 350ºC, will comprise a relatively simple insulated pressure boundary pipe.

6.2.1.3 Major System Interfaces

The PHTS subsystem interfaces with a number of major systems and other subsystems. At the systems level there are physical and structural interfaces with the Nuclear Heat Supply System (NHSS), Balance of Plant (BOP) Systems, Buildings and Structures, and the overall HTS. At the subsystem and component level there are significant interfaces with the Reactor Unit System, Helium Service System, the NHSS Control and Instrumentation System, the SHTS and the Nuclear Heat Supply Building.

The PHTS pressure boundary is an integral part of the overall NHSS primary pressure boundary. It surrounds the duct carrying the hot helium from the reactor core outlet and is structurally joined (welded) to the reactor pressure vessel near the core outlet. It includes the outer pipe between the reactor and IHX A, the IHX A and B pressure vessels, the outer pipe between IHX A and IHX B, parts of the PHTS circulator, and the cold leg piping back to the reactor vessel inlet near the top of the reactor pressure vessel. Coolant diverted from the cold leg of the PHTS flows in the annuli between the pressure boundary pipes and insulated hot ducts in the highest temperature piping and between the IHX A vessel and its liner to control the temperature of the PHTS pressure boundary in those high-temperature sections.

The PHTS Hot Gas Duct, the insulated coaxial structure within the pressure boundary pipe from the Reactor to IHX A (Figure 6.2-9), interfaces with the reactor core outlet plenum to collect and direct the flow of the helium heated in the reactor core to IHX A. A similar duct carries the heated helium from IHX A to IHX B. Helium leaving IHX B and the top-mounted PHTS main loop circulator is returned to the reactor inlet via the cold leg pressure boundary piping.

The interface of the PHTS with the SHTS is through both the high-temperature and low-temperature sections of the IHX. The IHX is defined as being part of the PHTS, even though it handles the SHTS working fluid as well; the PHTS interfaces with the SHTS are defined to be at the welds between the IHX vessel nozzles and the SHTS pressure boundary piping.

PHTS instrumentation and control is accommodated and interfaced through the NHSS Control and Instrumentation System. Instrumentation is provided to measure main coolant loop temperatures, pressures, and mass flow, as well as main circulator speed.

Helium inventory control, helium purification, and helium make-up for the PHTS are provided through the Helium Service System. An important function of the Helium Service System is maintaining the required differential pressure between the PHTS and SHTS.

The PHTS will be housed in the Nuclear Heat Supply Building within Buildings and Structures. All supporting structures related to the IHX vessels and PHTS pressure boundary piping naturally interface with the Nuclear Heat Supply Building.

6.2.1.4 System Operation

The overall operation of the NGNP, including the HTS, is addressed within PCDR Section 11, Overall NGNP Operation. In all modes and states in which the HTS is operational, the role of the PHTS is to transfer generated and/or residual heat from the reactor to the SHTS through the IHX. The heat transported to the SHTS is subsequently transferred to the PCHX of the HPS and/or to the SG of the PCS. The heat transferred to the PCS is used for power generation or, in the case of startup, shutdown and certain transients, rejected to the environment via an ultimate heat sink.

The PHTS operates at constant helium inventory, with heat transport governed by circulator speed.

6.2.2 Secondary Heat Transport System

6.2.2.1 System Functions and Requirements

6.2.2.1.1 Functions

The major functions of the Secondary Heat Transport System SHTS are:

- Transport and transfer thermal energy from the IHX to the PCHX/HPS and/or to the steam generator of the PCS during all modes of operation.
  - Normal production operations with energy supplied to both the HPS and the PCS or to the PCS alone.
  - Starting up/shutting down with energy transport to an ultimate heat sink within the PCS.
  - Certain maintenance conditions with energy transport to an ultimate heat sink within the PCS.
  - Specified transients and off-normal conditions with energy transport to an ultimate heat sink within the PCS.
- Maintain control of radionuclides.
- Protect the reactor from process-related hazards.

6.2.2.1.2 Requirements

The following requirements include plant level design selections that have been passed down to the Heat Transport System.

<u>System Configuration and Essential Features</u>

The SHTS design shall have one main coolant loop with helium as the working fluid.

The SHTS loop shall physically extend from the secondary outlet of PHTS IHX A to the secondary inlet of PHTS IHX B, excluding the PCHX and SG. It shall further include the secondary piping between IHX A and IHX B.

The main circulator for the SHTS shall be located in a separate vessel in the cold leg of the secondary coolant loop.

The SHTS design shall provide for delivery of ¼ of the total helium flow to the HPS PCHX and the balance to the PCS Steam Generator at rated full-power conditions.

The SHTS design shall provide for recombining and thermal mixing of the coolant stream exiting the PCHX with the helium flow going directly to the PCS.

Provisions shall be made for pressure relief of the SHTS at [9.4] MPa.

Operational Requirements

The SHTS shall be designed for an operating life of 60 years.

The SHTS shall be essentially pressure balanced with the PHTS at nominally 9 MPa but with a slight bias toward lower pressure in the SHTS.

The SHTS shall be designed to transfer a total of 520 MWt (including the secondary circulator power) from the PHTS IHX to the PCS SG and HPS PCHX. 470 MWt will be transferred to the PCS and 50 MWt to the PCHX when both the PCS and HPS are operating. If the HPS is not operating, all thermal energy shall be transferred to the PCS.

The SHTS shall be designed to deliver thermal energy to the PCHX and PCS at a nominal temperature of 900ºC; return flow to the IHX shall be nominally 287ºC.

Structural Requirements

The SHTS shall be designed to mitigate the consequences of internally generated missiles from rotating machinery.

The SHTS shall be designed to resist acoustic pressure levels and flow-induced forces resulting from operation of the circulator from 0 to 120% speed.

Environmental Requirements

Those portions of the SHTS exposed to secondary coolant helium shall be designed to resist chemical impurities within the limits specified for the secondary coolant [TBD].

Instrumentation and Control Requirements

Instrumentation and control requirements are addressed in PCDR Section 4, Nuclear Heat Supply System.

Maintenance Requirements

The SHTS shall incorporate features that limit the amount of time the reactor is required to be removed from service for unscheduled maintenance of SHTS components to, on average, [TBD] hours/year.

The nominal interval between scheduled maintenance outages for the SHTS shall be [5] years.

Components of the SHTS having lifetimes of less than 60 years shall be designed for replacement within normally scheduled maintenance outages.

6.2.2.2 System Description

This subsection will describe the overall characteristics, major features, and configuration of the SHTS and its major components.

6.2.2.2.1 SHTS Integration

The SHTS is composed of a single loop transporting a combined 520 MWt (including circulator power) from the PHTS IHX high-temperature secondary outlet (IHX A) to both a PCHX that provides for hydrogen production in the HPS and a steam generator in the PCS (see Figure 6.2-1 and Figure 6.2-2). Pressure in the SHTS ranges from 8.1 MPa to 8.5 MPa and is essentially pressure-balanced with the PHTS but with a slight bias toward lower pressure in the SHTS. Helium is the working fluid with a mean temperature of 900ºC upstream of both the PCHX and the helium-mixing chamber. The mixing chamber accepts the helium flow streams coming directly from PHTS IHX A and from the exit of the PCHX. Fixed replaceable orifices will be placed upstream of the mixing chamber and the PCHX return flow to provide the desired split of the helium stream (3/4 to the SG and ¼ to the PCHX). This is also indicated in Figure 6.2-1. The helium stream will exit the SG at nominally 272ºC and be heated by compression in the circulator to 287ºC before returning to the secondary inlet of the PHTS IHX (IHX B).

Temperature protection for the SHTS pressure boundary will be provided by passive cooling employing internal insulation. This selection is to be confirmed during conceptual design.

6.2.2.2.2 SHTS Circulator

The circulator for the SHTS is an electric driven machine of 12.3 MW, operating at nominally 8.5 MPa and 287ºC (exit conditions). It is to be located in the return piping from the SG. Consideration was given to locating the circulator on the SG vessel because this would eliminate the need for a separate circulator pressure boundary. However, the in-line configuration provides the optimum access for circulator maintenance and does not add to the design complexity of the SG vessel. Further, it allows the circulator and its associated secondary pressure boundary vessel to be placed within the protected environment of the Nuclear Heat Supply Building, in close proximity to its interface with the building housing the SG.

6.2.2.2.3 SHTS Piping

There are basically three regimes of piping in the SHTS loop. The first is the piping from the outlet of PHTS IHX A to the PCHX and/or the SG. The nominal temperature of the IHX exit

flow and its entrance into the PCHX and/or SG is 900ºC. Considerations here were active versus passive cooling, internal versus external insulation, and flexible hot pipes versus rigid hot pipes. The option selected was a flexible design using passive cooling (internal insulation). This decision will be revisited in a future study to be described in Section 6.4.2.

The next piping section is the relatively short run from the PCHX to the thermal mixing chamber and henceforth to the SG. Temperatures in this section may range from 659ºC with the HPS unit operating to 900ºC if it is not in operation. The design selection made for this piping is the same as that described in the paragraph above (passive cooling).

The piping from the steam generator to the circulator and hence to PHTS IHX B carries helium at temperatures in the range 272ºC to 287ºC. It could be operated without insulation in terms of material capability, but external insulation was selected to aid in minimizing heat loss.

6.2.2.2.4 SHTS Flow Coupling and Mixing

Two flow configurations for the transport of the SHTS helium coolant to the PCHX (HPS) and SG (PCS) were considered. In the first option, which was not selected, all of the helium flow would be directed through the PCHX and thence to the SG. This would simplify the piping arrangement and avoid any complications related to regulating and mixing the split of flow between the PCHX and the SG. However, in this case, the relative flows on the SHTS and process sides of the PCHX would not be representative of commercial plant designs. Also, the PCHX would necessarily operate at the IHX outlet temperature when the HPS is shut down and would be dry on its process side.

In the second option, which was ultimately selected, a replaceable fixed orifice is used to force a split of flow, with 75% routed directly to the SG and 25% through the PCHX (see Figure 6.2-1). This also offers the potential to isolate flow through the PCHX, if desired, by bypassing or blanking off the PCHX, or through the use of valves. These further options will be evaluated in a joint future study with the HPS.

Both the 75% split of helium flow bypassing the PCHX and the 25% split directed through the PCHX are subsequently rejoined in a helium-mixing chamber before proceeding to the SG. The mechanics of the split and remix of the SHTS coolant flow are shown schematically in Figure 6.2-1.

6.2.2.3 Major System Interfaces

The SHTS subsystem interfaces with a number of major systems and other subsystems. At the system level, there are physical and structural interfaces with the NHSS, the PCS, the HPS, and the overall HTS. At the subsystem and component level, there are significant interfaces with the Helium Service System, the NHSS Control and Instrumentation System, the PHTS, and the Nuclear Heat Supply, Hydrogen Production and Power Conversion buildings.

The SHTS interfaces with the PHTS at IHX A and IHX B, the HPS at the PCHX, and the PCS at the SG. It provides the conduit for carrying the hot helium from the high-temperature PHTS IHX secondary outlet to both the PCHX and the SG inlets and returning the cold leg helium via the circulator to the low-temperature PHTS IHX secondary inlet.

Instrumentation is provided to measure main coolant loop temperatures, pressures, and mass flow as well as main circulator speed. There is instrumentation/control feedback through the SHTS to set and control PHTS circulator speed.

Helium inventory control, helium purification, and helium make-up for the SHTS are provided through the Helium Service System. An important function of the Helium Service System is to maintain the required PHTS/SHTS pressure balance.

The SHTS will be housed in the Nuclear Heat Supply Building and the adjacent structures housing the PCHX and SG. All supporting structures related to the SHTS circulator and SHTS pressure boundary piping naturally interface with Nuclear Heat Supply Building and adjacent structures.

6.2.2.4 System Operation

The overall operation of the NGNP, including the HTS, is addressed within PCDR Section 11, Overall NGNP Operation. In all modes and states in which the HTS is operational, the role of the SHTS is to collect the generated and/or residual heat from the reactor via the PHTS IHX and to transport this heat to the PCHX for the HPS and/or to the PCS. The heat transferred to the PCS is used for power generation or, in the case of startup and shutdown, is rejected via an ultimate heat sink.

The SHTS operates at constant helium inventory, with heat transport governed by circulator speed.

6.3 HTS DESIGN DEVELOPMENT NEEDS

Design Data Needs (DDNs) have been identified for three NGNP Heat Transport System (HTS) components. These are the Intermediate Heat Exchanger (IHX), Secondary HTS (SHTS) Helium-Mixing Chamber, and the PHTS and SHTS High-Temperature Ducts and Insulation. The IHX is generally regarded as the most critical development issue within the NGNP Nuclear Heat Supply System (NHSS) and, for that reason, two parallel development paths have been recommended. These are metallic and ceramic heat exchangers. The DDNs associated with the metallic IHX option are addressed in Section 6.3.1 that follows. The ceramic IHX option is addressed in Section 6.3.2. The SHTS Helium-Mixing Chamber is discussed in Section 6.3.3 and the high-temperature ducts and insulation are addressed in Section 6.3.4.

6.3.1 Intermediate Heat Exchanger – Metallic

The intermediate heat exchanger (IHX) is a critical high-temperature component of the NGNP. To attain the cost and performance goals of the NGNP and related commercial process heat plants, a plate-type compact heat exchanger, which is characterized by thin metal cross-sections, has been selected as the initial reference for the NGNP design. The reference material for the IHX is Alloy 617 and Alloy 230 has been identified as a backup material.

Given the demanding operating conditions for the IHX, it has been concluded that a parallel development of advanced (ceramic and/or composite) heat exchangers should be pursued in parallel with the reference design. The DDNs identified in Section 6.3.1 support the reference metallic IHX concept.

6.3.1.1 Functions

1. Contain the primary helium coolant and secondary heat transport system (SHTS) working fluid
2. Transfer thermal energy from the primary helium coolant to the SHTS working fluid

6.3.1.2 Key Requirements

The specified service conditions and other key requirements influencing DDNs for the IHX are given below:

- Nominal IHX primary helium inlet temperature of 950ºC and primary outlet temperature of 337ºC
- Secondary helium inlet temperature of nominally 290ºC
- Nominal 900ºC secondary IHX outlet temperature
- Helium in both the PHTS and SHTS with controlled impurity levels [TBD]
- Primary loop pressure of 9 MPa

- Primary to secondary loop ΔP and interior to exterior ΔP near zero (essentially pressure balanced at [<200 kPa])
- Forced outage allocation is [<1%]
- Operating life:
    - Low-temperature sections ([<760ºC]): 60 equivalent full-power years
    - High-temperature sections ([>760ºC]): [>10] equivalent full-power years

6.3.1.3 Design Data Needs

A total of 19 DDNs have been identified for the metallic IHX (Table 6.3-1). These DDNs address materials characterization and qualification, development of methods and criteria for design and analysis and performance verification. In addition, DDNs are identified to support NGNP-specific ASME Code Cases for the IHX materials and design.

Table 6.3-1: Design Data Needs for Metallic IHX

DDN	Title
HTS-01	**Intermediate Heat Exchanger - Metallic**
HTS-01-01	Establish Reference Specifications for Alloy 617
HTS-01-02	Thermal/Physical and Mechanical Properties of Alloy 617
HTS-01-03	Welding and As-Welded Properties of Materials of Alloy 617for Compact Heat Exchangers
HTS-01-04	Aging Effects of Alloy 617
HTS-01-05	Environmental Effects of Impure Helium on Alloy 617
HTS-01-06	Influence of Grain Size on Materials Properties on Alloy 617
HTS-01-07	Establish Reference Specifications for Alloy 230
HTS-01-08	Thermal/Physical and Mechanical Properties of Alloy 230
HTS-01-09	Welding and As-Welded Properties of Materials of Alloy 230for Compact Heat Exchangers
HTS-01-10	Aging Effects of Alloy 230
HTS-01-11	Environmental Effects of Impure Helium on Alloy 230
HTS-01-12	Influence of Grain Size on Materials Properties on Alloy 230
HTS-01-13	Methods for Thermal/Fluid Modeling of Plate-Type Compact Heat Exchangers
HTS-01-14	Methods for Stress/Strain Modeling of Plate-Type Compact Heat Exchangers
HTS-01-15	Criteria for Structural Adequacy of Plate-Type Compact Heat Exchangers at Very High Temperatures
HTS-01-16	Methods for Performance Modeling of Plate-Type Compact Heat Exchangers
HTS-01-17	IHX Performance Verification
HTS-01-18	Data Supporting Materials Code Case
HTS-01-19	Data Supporting Design Code Case

DDN HTS-01-01 ESTABLISH REFERENCE SPECIFICATIONS AND PROCUREMENT OF ALLOY 617

1. Assumptions (to be confirmed by meetings with alloy vendor organizations and related R&D)

The standard American Society for Testing and Materials (ASTM) specification for Alloy 617 can be modified slightly to produce an alloy with more predictable high temperature mechanical properties optimized for the IHX application or the standard ASTM Alloy 617 specification will be selected for procurement and qualification testing. The alloy chemistry, fabrication processes and grain size have the most significant impact on long-term properties.

2. Current Database Summary

The current database for Alloy 617 shows a fairly wide variation of high temperature mechanical properties for the material heats that have been examined in detail. Factors that could have caused the observed variation of properties include (a) the material heats were produced over many years and significant changes have occurred in melting and forging practices over that time; (b) the standard ASTM chemical specification for this alloy is fairly broad for various reasons; and (c) the specific testing procedures used have changed over the time-span involved. A refined specification for Alloy 617, designated Alloy 617CCA, was developed for the fossil power industry within the Fossil Ultra-supercritical (USC) Program but limited results on one heat of material procured to this specification have been inconclusive. An effort was also made within the NGNP Materials R&D Program at ORNL to produce a refined specification; however, due to a lack of program funding and problems with forging the test heats, the results obtained were also not conclusive. It is known that the French have incorporated this alloy in their IHX testing and are performing R&D on a more refined specification. The current database indicates that Alloy 617 has marginal long term properties for the high temperature portion of the IHX; however, based on a study performed, alternative potential alloys are also marginal.

3. Summary of Data Needed

Data needed include assessment of the current database and verification that at least three heats obtained for the IHX testing and qualification program conform to the procurement and quality assurance documentation.

4. Designer's Alternatives

Alloy 230 could be selected on the basis of DDNs HTS-01-07 through HTS-01-12 without a qualification R&D program for Alloy 617.

5. Selected Design Approach and Explanation

The proposed approach is to obtain an adequate database for design, analysis and test evaluation of compact heat exchangers using Alloy 617/617CCA and to support the development of ASME Section III Code Cases for the material and design.

6. Schedule Requirements

Establishing the reference alloy specification, alloy procurement and verification are required prior to the start of testing, qualification, modeling or ASME Code development. Therefore, this is needed as soon as possible, but not later than the first half of FY 2009.

7. Priority

Urgency (1-5):	1
Cost-Benefit (Low, Medium, High):	High
Uncertainty in Existing Data (Low, Medium, High):	High
Importance of New Data (Low, Medium, High):	High

8. Fallback Position and Consequences Of Non-Execution

The fallback position is to select a shell and tube IHX design that would allow use of standard Alloy 617. Non-execution of this DDN would, therefore, eliminate the option for using a compact IHX design with unacceptable performance and cost ramifications.

9. References

1. NGNP and Hydrogen Production Preconceptual Design Report, NGNP-01-RPT-001, Special Study 20.3 - High Temperature Process Heat Transfer and Transport, January 2007.
2. Ren, W. and Swindeman, R. W., Assessment of Existing Alloy 617 Data for GEN IV Materials Handbook, ORNL/TM-2005/510, Oak Ridge National Laboratory, Oak Ridge, TN, June 30, 2005.

DDN HTS-01-02 THERMAL/PHYSICAL AND MECHANICAL PROPERTIES OF ALLOY 617

1. Assumptions (to be confirmed by the related R&D program)

Alloy 617, optimized for compact heat exchangers with a small grain size (ASTM 6-8), will have mechanical properties that are adequate for a plate-type IHX operated under NGNP conditions.

2. Current Database Summary

The current mechanical and physical properties database for Alloy 617 is based primarily on multiple heats of standard ASME SB-168 plate material with a relatively large grain size (ASTM 0-3), and this is not consistent with the needs of compact heat exchangers. The database is reasonably complete for the temperature range of room temperature to 982ºC. The database for Alloy 617CCA, developed within the Fossil Ultrasupercritical (USC) Program, is believed to be limited to one heat of standard ASME SB-168 and about 10-15 long term creep rupture tests. Standard Alloy 617 (which envelopes Alloy 617CCA) is listed in ASME Section II for application to ASME Sections I and VIII, Division 1. The ASME does not currently allow Alloy 617 for Section III applications and it is anticipated that a Section III Code Case would need to be submitted and approved for a nuclear power application to be implemented using this material. The material would be exposed to an inlet temperature of about 950ºC and operate for extended time periods at this temperature; therefore, creep and other high temperature mechanical properties are of particular importance. Due to the low design margin for metallic alloys such as Alloy 617 at these high temperatures, an adequate real database based on 3 heats of material for the grain size range expected to be useable for the IHX should be developed.

3. Summary of Data Needed

Data needed include thermal/physical properties (chemical composition, thermal conductivity and coefficient of thermal expansion and mechanical properties (elastic constants, stress/strain relationships, fatigue and creep strength, fracture toughness, etc.) at temperatures up to 1000ºC.

4. Designer's Alternatives

The designer's alternative is to select an IHX design that does not require a thin-section material, such as a shell and tube IHX.

5. Selected Design Approach and Explanation

The proposed approach is to obtain an adequate database for design, analysis and test evaluation of compact heat exchangers using Alloy 617/617CCA and to support the development of ASME Section III Code Cases for the material and design.

6. Schedule Requirements

Results are required by the end of FY2010 to support design, procurement and testing of a prototype IHX module for verification of models prior to long-lead procurement of NGNP components in FY2013, which is required to support NGNP operation by the end of 2018.

7. Priority

Urgency (1-5):	1
Cost-Benefit (Low, Medium, High):	High
Uncertainty in Existing Data (Low, Medium, High):	High
Importance of New Data (Low, Medium, High):	High

8. Fallback Position and Consequences Of Non-Execution

The fall-back position is to select a shell and tube IHX design that would allow use of standard Alloy 617. Non-execution of this DDN would, therefore, eliminate the option for using a compact IHX design with unacceptable performance and cost ramifications.

9. References

1. NGNP and Hydrogen Production Preconceptual Design Report, NGNP-01-RPT-001, Special Study 20.3 - High Temperature Process Heat Transfer and Transport, January 2007.

DDN HTS-01-03 WELDABILITY ASSESSMENT OF ALLOY 617

1. Assumptions (to be confirmed by the related R&D program)

Alloy 617 can be welded by conventional processes and diffusion bonded as thin sheets to form a prototype compact heat exchanger, provided that alloy chemistry, fabrication processes and welding/diffusion bonding processes are closely controlled.

2. Current Database Summary

The current database for Alloy 617 includes extensive information on conventional welding processes. Therefore, the weldability assessment will validate that conventional welding processes can be performed successfully on the alloy heats procured. The current database includes very little information on thin sheet diffusion bonding, which is an essential technology required for the fabrication of some types of compact heat exchangers. The information available indicates that Alloy 617 can be diffusion bonded with a thin nickel interface layer with some loss in mechanical properties. Heatric is undertaking the development of diffusion bonding of Alloy 617; however, this information is proprietary and has not been released and could not be used in the ASME Code Case even if it was obtained under a proprietary agreement.

3. Summary of Data Needed

Data needed include selected mechanical properties (yield, tensile strength and elongation; fatigue and creep strength; fracture toughness, etc.) at temperatures up to 1000ºC on welded and diffusion bonded test specimens and validation that diffusion bonding can be performed without using an interface material and without a significant reduction in mechanical properties.

4. Designer's Alternatives

The designer's alternative is to select an IHX design that does not require a thin-section material, such as a shell and tube IHX.

5. Selected Design Approach and Explanation

The proposed approach is to obtain an adequate database for design, analysis and test evaluation of compact heat exchangers using Alloy 617/617CCA and to support the development of ASME Section III Code Cases for the material and design.

6. Schedule Requirements

Results are required in early-FY2010 to support design, procurement and testing of a prototype IHX module for verification of models prior to long-lead procurement of NGNP components in FY2013, which is required to support NGNP operation by the end of 2018.

7. Priority

Urgency (1-5):	1
Cost-Benefit (Low, Medium, High):	High
Uncertainty in Existing Data (Low, Medium, High):	High
Importance of New Data (Low, Medium, High):	High

8. Fallback Position and Consequences Of Non-Execution

The fallback position is to select a shell and tube IHX design that would allow use of standard Alloy 617 and conventional welding processes. Non-execution of this DDN would, therefore, eliminate the option for using a compact IHX design with unacceptable performance and cost ramifications.

9. References

1. NGNP and Hydrogen Production Preconceptual Design Report, NGNP-01-RPT-001, Special Study 20.3 - High Temperature Process Heat Transfer and Transport, January 2007.

DDN HTS-01-04 AGING ASSESSMENT OF ALLOY 617

1. Assumptions (to be confirmed by the related R&D program)

Alloy 617 can be used at very high temperatures (up to 950ºC) for very long time periods (at least 10 years), without unacceptable degradation of mechanical properties or microstructure if alloy chemistry, fabrication processes and grain size are closely controlled.

2. Current Database Summary

The current database for Alloy 617 contains extensive information on the aging characteristics of plate material tested in an air environment. This information indicates that the effects of long term aging on mechanical properties and microstructure show some variability, primarily as a function of slight changes in alloy chemistry and test conditions; however, most data shows a small increase in tensile properties and creep resistance at intermediate temperatures (600-800ºC) with a corresponding decrease in fracture toughness and ductility. Less data is available for long-term exposure at higher temperatures (up to 950ºC); however, more microstructural changes were noted and most mechanical properties showed limited degradation as a function of time and temperature. Essentially no data is available for the aging characteristics of welded or diffusion bonded material.

3. Summary of Data Needed

Data needed include selected mechanical properties (yield, tensile strength and elongation; fatigue and creep strength; fracture toughness, etc.) following aging at temperatures up to 1000ºC for times up to 10,000 hours on standard, welded and diffusion bonded test specimens and validation that aging does not produce an unacceptable reduction in mechanical properties.

4. Designer's Alternatives

The designer's alternatives are limited because aging changes occur for all heat exchanger designs if Alloy 617 is used as the primary fabrication material and these changes need to be evaluated.

5. Selected Design Approach and Explanation

The proposed approach is to obtain an adequate database for design, analysis and test evaluation of compact heat exchangers using Alloy 617/617CCA and to support the development of ASME Section III Code Cases for the material and design.

6. Schedule Requirements

Results are required by the end of FY2010 to support design, procurement and testing of a prototype IHX module for verification of models prior to long-lead procurement of NGNP components in FY2013, which is required to support NGNP operation by the end of 2018.

7. Priority

Urgency (1-5):	1
Cost-Benefit (Low, Medium, High):	High
Uncertainty in Existing Data (Low, Medium, High):	High
Importance of New Data (Low, Medium, High):	High

8. Fallback Position and Consequences Of Non-Execution

The fallback position is to use the existing database and not proceed with an Alloy 617 Code Case.

9. References

1. NGNP and Hydrogen Production Preconceptual Design Report, NGNP-01-RPT-001, Special Study 20.3 - High Temperature Process Heat Transfer and Transport, January 2007.

DDN HTS-01-05 ENVIRONMENTAL ASSESSMENT OF ALLOY 617

1. Assumptions (to be confirmed by the related R&D program)

Alloy 617 can be used at very high temperatures (up to 950ºC) for very long time periods (at least 10 years) without unacceptable degradation of mechanical properties or microstructure in a slightly impure helium environment containing CO, CO2, H2, H2O and O2, if alloy chemistry, fabrication processes and control of the helium environment in the reactor are maintained.

2. Current Database Summary

The current database for Alloy 617 contains limited information on the corrosion, microstructural stability and mechanical property changes that may occur as a function of time, temperature and environmental conditions following long term high temperature exposure to an impure helium environment. These data show substantial variability due primarily to slight differences in alloy chemistry and specific testing conditions. These data also indicate that surface effects, including carburization or decarburization, can occur during the testing performed and these changes can affect the high temperature mechanical properties of the alloy. The database contains little or no information on the effects of long-term environmental exposure at very high temperature on welded or diffusion bonded specimens. Aging and environment effects on Alloy 617 are closely related.

3. Summary of Data Needed

Data needed include selected mechanical properties (yield, tensile strength and elongation; fatigue and creep strength; fracture toughness, etc.) following aging and environmental exposure at temperatures up to 1000ºC on standard, welded and diffusion bonded test specimens and validation that aging and environmental exposure do not produce an unacceptable reduction in mechanical properties.

4. Designer's Alternatives

The designer's alternatives are limited because aging and environmentally induced changes occur for all heat exchanger designs if Alloy 617 is used as the primary fabrication material and helium is used as the Very High Temperature Reactor (VHTR) coolant; therefore, these changes need to be evaluated irrespective of heat exchanger design.

5. Selected Design Approach and Explanation

The proposed approach is to obtain an adequate database for design, analysis and test evaluation of compact heat exchangers using Alloy 617/617CCA and to support the development of ASME Section III Code Cases for the material and design.

6. Schedule Requirements

Results are required by the end of FY2010 to support design, procurement and testing of a prototype IHX module for verification of models prior to long-lead procurement of NGNP components in FY2013, which is required to support NGNP operation by the end of 2018.

7. Priority

Urgency (1-5):	1
Cost-Benefit (Low, Medium, High):	High
Uncertainty in Existing Data (Low, Medium, High):	High
Importance of New Data (Low, Medium, High):	High

8. Fallback Position and Consequences Of Non-Execution

The fallback position is to use the existing database and not proceed with an Alloy 617 Code Case.

9. References

1. NGNP and Hydrogen Production Preconceptual Design Report, NGNP-01-RPT-001, Special Study 20.3 - High Temperature Process Heat Transfer and Transport, January 2007.
2. Ren, W. and Swindeman, R. W., Assessment of Existing Alloy 617 Data for GEN IV Materials Handbook, ORNL/TM-2005/510, Oak Ridge National Laboratory, Oak Ridge, TN, June 30, 2005.

DDN HTS-01-06 GRAIN SIZE ASSESSMENT OF ALLOY 617

1. Assumptions (to be confirmed by the related R&D program)

Alloy 617 can retain acceptable fatigue and creep properties at high temperature for long time periods if the alloy chemistry and fabrication processes are carefully controlled. A key aspect of the control of fabrication processes includes the initial procurement of fine grain size material (ASTM 6-8). It is also assumed that a reasonably fine grain size can be maintained following diffusion bonding and high temperature long-term exposure.

2. Current Database Summary

The current database for Alloy 617 was primarily obtained using test specimens with a large grain size (ASTM 0-3). This range of grain size was used because this alloy was developed to optimize high temperature creep resistance and a large grain size will enhance this property. Virtually all creep testing performed previously was performed at relatively high stress levels and it was assumed that the deformation mechanism under these conditions was power law creep. The preferred IHX design for the NGNP is currently a compact type high efficiency heat exchanger that is fabricated from thin sheets of material that are subjected primarily to very low stresses over long time periods. This issue was recently evaluated by ORNL and it was concluded that under these conditions a different deformation mechanism (Nabarro-Herring creep) could dominate and this could result in the prediction of lower creep rates during testing by several orders of magnitude if a power law mechanism was used to evaluate the data rather than the alternate mechanism noted. The use of thin sheets for the fabrication of a compact type of IHX will require the use of smaller grain size material to increase fatigue resistance during operation and to reduce the possibility that grains approaching or greater than the sheet thickness will be present during fabrication. Therefore, because of these issues, much of the current database for Alloy 617 could be inapplicable for the current IHX application.

3. Summary of Data Needed

Data needed include the evaluation of creep, creep fatigue and fatigue properties of fine grained material; the determination of the specific mechanism that is applicable for the evaluation of data under the conditions of low stress creep testing and the investigation of the effects of diffusion bonding and long-term high temperature exposure on the residual grain size of the material.

4. Designer's Alternatives

The designer's alternative is to select an IHX design that does not require a thin-section material, such as a shell and tube IHX.

5. Selected Design Approach and Explanation

The proposed approach is to obtain an adequate database for design, analysis and test evaluation of compact heat exchangers using Alloy 617/617CCA and to support the development of ASME Section III Code Cases for the material and design.

6. Schedule Requirements

Results are required in early-FY2010 to support design, procurement and testing of a prototype IHX module for verification of models prior to long-lead procurement of NGNP components in FY2011, which is required to support NGNP operation by the end of 2018.

7. Priority

Urgency (1-5):	1
Cost-Benefit (Low, Medium, High):	High
Uncertainty in Existing Data (Low, Medium, High):	High
Importance of New Data (Low, Medium, High):	High

8. Fallback Position and Consequences Of Non-Execution

The fallback position is to use the existing database, not proceed with an Alloy 617 Code Case and use a traditional heat exchanger design.

9. References

1. NGNP and Hydrogen Production Preconceptual Design Report, NGNP-01-RPT-001, Special Study 20.3 - High Temperature Process Heat Transfer and Transport, January 2007.

DDN HTS-01-07 ESTABLISH REFERENCE SPECIFICATIONS AND PROCUREMENT OF ALLOY 230

1. Assumptions (to be confirmed by meetings with alloy vendor organizations and related R&D)

Alloy 230 is the best alternate material for fabrication of the IHX application and the standard ASTM specification for Alloy 230 can be modified slightly to produce an alloy with more predictable high temperature mechanical properties optimized for the IHX application or the standard ASTM Alloy 230 specification will be selected for procurement and qualification testing. The alloy chemistry, fabrication processes and grain size have the most significant impact on long-term properties.

2. Current Database Summary

The current database for Alloy 230 shows less variability of high temperature mechanical properties than Alloy 617 for the material heats that have been examined in detail. Factors that could have caused the lesser variation of properties include (a) the material heats were produced more recently and significant changes have not occurred in melting and forging practices over that time, and (b) the standard ASTM chemical specification for this alloy appears to be more controlled than Alloy 617 but may still require optimization for the IHX application. It is known that the French have incorporated this alloy in their IHX testing and are performing R&D on a more refined specification. The current database indicates that Alloy 230 has marginal long term properties for the high temperature portion of the IHX; however, based on a study performed, alternative potential alloys are also marginal.

3. Summary of Data Needed

Data needed include assessment of the current database and verification that the three heats obtained for the IHX testing and qualification program conform to the procurement and quality assurance documentation.

4. Designer's Alternatives

Alloy 617 could be selected on the basis of DDNs HTS-01-01 through HTS-01-06 without a qualification R&D program for Alloy 230.

5. Selected Design Approach and Explanation

The proposed approach is to obtain an adequate database for design, analysis and test evaluation of compact heat exchangers using Alloy 230 and to support the development of ASME Section III Code Cases for the material and design.

6. Schedule Requirements

Establishing the reference alloy specification, alloy procurement and verification are required prior to the start of testing, qualification, modeling or ASME Code development. Therefore, this is needed as soon as possible, but not later than the first half of FY 2009.

7. Priority

Urgency (1-5):	1
Cost-Benefit (Low, Medium, High):	High
Uncertainty in Existing Data (Low, Medium, High):	High
Importance of New Data (Low, Medium, High):	High

8. Fallback Position and Consequences Of Non-Execution

The fallback position is to select a shell and tube IHX design that would allow use of standard Alloy 230. Non-execution of this DDN would, therefore, eliminate the option for using a compact IHX design with unacceptable performance and cost ramifications.

9. References

1. NGNP and Hydrogen Production Preconceptual Design Report, NGNP-01-RPT-001, Special Study 20.3 - High Temperature Process Heat Transfer and Transport, January 2007.

DDN HTS-01-08 THERMAL/PHYSICAL AND MECHANICAL PROPERTIES OF ALLOY 230

1. Assumptions (to be confirmed by the related R&D program)

Alloy 230, optimized for compact heat exchangers with a small grain size (ASTM 6-8), will have mechanical properties that are adequate for a plate-type IHX operated under NGNP conditions.

2. Current Database Summary

The current mechanical properties database for Alloy 230 is based primarily on multiple heats of standard ASME SB-435 plate material with a relatively large grain size (ASTM 0-3), and this is not consistent with the needs of compact heat exchangers. The database is reasonably complete for the temperature range of room temperature to 982ºC. Alloy 230 is listed in ASME Section II for application to ASME Sections I and VIII, Division 1. The ASME does not currently allow Alloy 230 for Section III applications and it is anticipated that a Section III Code Case would need to be submitted and approved for a nuclear power application to be implemented using this material. The material would be exposed to an inlet temperature of about 950ºC and operate for extended time periods at this temperature; therefore, creep and other high temperature mechanical properties are of particular importance. Due to the low design margin for metallic alloys such as Alloy 230 at these high temperatures, an adequate real database based on 3 heats of material for the grain size range expected to be useable for the IHX should be developed.

3. Summary of Data Needed

Data needed include thermal/physical properties (chemical composition, thermal conductivity and coefficient of thermal expansion and mechanical properties (elastic constants, stress/strain relationships, fatigue and creep strength, fracture toughness, etc.)) at temperatures up to 1000ºC.

4. Designer's Alternatives

The designer's alternative is to select an IHX design that does not require a thin-section material, such as a shell and tube IHX.

5. Selected Design Approach and Explanation

The proposed approach is to obtain an adequate database for design, analysis and test evaluation of compact heat exchangers using Alloy 230 or a variant and to support the development of ASME Section III Code Cases for the material and design.

6. Schedule Requirements

Results are required by the end of FY2010 to support design, procurement and testing of a prototype IHX module for verification of models prior to long-lead procurement of NGNP components in FY2013, which is required to support NGNP operation by the end of 2018.

7. Priority

Urgency (1-5):	1
Cost-Benefit (Low, Medium, High):	High
Uncertainty in Existing Data (Low, Medium, High):	High
Importance of New Data (Low, Medium, High):	High

8. Fallback Position and Consequences Of Non-Execution

The fallback position is to select a shell and tube IHX design that would allow use of standard Alloy 230 or Alloy 617. Non-execution of this DDN would, therefore, eliminate the option for using a compact IHX design with unacceptable performance and cost ramifications.

9. References

1. NGNP and Hydrogen Production Preconceptual Design Report, NGNP-01-RPT-001, Special Study 20.3 - High Temperature Process Heat Transfer and Transport, January 2007.

DDN HTS-01-09 WELDABILITY ASSESSMENT OF ALLOY 230

1. Assumptions (to be confirmed by the related R&D program)

Alloy 230 can be welded by conventional processes and diffusion bonded as thin sheets to form a prototype compact heat exchanger, provided that alloy chemistry, fabrication processes and welding/diffusion bonding processes are closely controlled.

2. Current Database Summary

The current database for Alloy 230 includes extensive information on conventional welding processes. Therefore, the weldability assessment will validate that conventional welding processes can be performed successfully on the alloy heats procured. The current database includes very little information on thin sheet diffusion bonding which is an essential technology required for the fabrication of some types of compact heat exchangers. The information available (based on discussions with Heatric) indicates that Alloy 230 can be successfully diffusion bonded; however, specifics are not available, as any information is considered proprietary and would not be useful for the development of an ASME Code Case.

3. Summary of Data Needed

Data needed include selected mechanical properties (yield, tensile strength and elongation; fatigue and creep strength; fracture toughness, etc.) at temperatures up to 1000ºC on welded and diffusion bonded test specimens and validation that diffusion bonding can be performed without using an interface material and without a significant reduction in mechanical properties.

4. Designer's Alternatives

The designer's alternative is to select an IHX design that does not require a thin-section material, such as a shell and tube IHX.

5. Selected Design Approach and Explanation

The proposed approach is to obtain an adequate database for design, analysis and test evaluation of compact heat exchangers, using Alloy 230 or a variant, and to support the development of ASME Section III Code Cases for the material and design.

6. Schedule Requirements

Results are required by early-FY2010 to support design, procurement and testing of a prototype IHX module for verification of models prior to long-lead procurement of NGNP components in FY2013, which is required to support NGNP operation by the end of 2018.

7. Priority

Urgency (1-5):	1
Cost-Benefit (Low, Medium, High):	High
Uncertainty in Existing Data (Low, Medium, High):	High
Importance of New Data (Low, Medium, High):	High

8. Fallback Position and Consequences Of Non-Execution

The fallback position is to select a shell and tube IHX design that would allow use of Alloy 230 or Alloy 617 and conventional welding processes. Non-execution of this DDN would, therefore, eliminate the option for using a compact IHX design with unacceptable performance and cost ramifications.

9. References

1. NGNP and Hydrogen Production Preconceptual Design Report, NGNP-01-RPT-001, Special Study 20.3 - High Temperature Process Heat Transfer and Transport, January 2007.

DDN HTS-01-10 AGING ASSESSMENT OF ALLOY 230

1. Assumptions (to be confirmed by the related R&D program)

Alloy 230 or a variant can be used at very high temperatures (up to 950ºC) for very long time periods (at least 10 years), without unacceptable degradation of mechanical properties or microstructure, if alloy chemistry, fabrication processes and grain size are closely controlled.

2. Current Database Summary

The current database for Alloy 230 contains a fairly large body of information on the aging characteristics of plate material tested in an air environment. This information indicates that the effects of long-term aging on mechanical properties and microstructure show some variability primarily as a function of slight changes in alloy chemistry and test conditions. Less data is available for long-term exposure at higher temperatures (up to 950ºC); however, more microstructural changes were noted and most mechanical properties showed limited degradation as a function of time and temperature. Essentially no data is available for the aging characteristics of welded or diffusion bonded material.

3. Summary of Data Needed

Data needed include selected mechanical properties (yield, tensile strength and elongation; fatigue and creep strength; fracture toughness, etc.) following aging at temperatures up to 1000ºC for times up to 10,000 hours on standard, welded and diffusion bonded test specimens and validation that aging does not produce an unacceptable reduction in mechanical properties.

4. Designer's Alternatives

The designer's alternatives are limited because aging changes occur for all heat exchanger designs if Alloy 230 is used as the primary fabrication material and these changes need to be evaluated.

5. Selected Design Approach and Explanation

The proposed approach is to obtain an adequate database for design, analysis and test evaluation of compact heat exchangers using Alloy 230 or a variant and to support the development of ASME Section III Code Cases for the material and design.

6. Schedule Requirements

Results are required by the end of FY2010 to support design, procurement and testing of a prototype IHX module for verification of models prior to long-lead procurement of NGNP components in FY2013, which is required to support NGNP operation by the end of 2018.

7. Priority

Urgency (1-5):	1
Cost-Benefit (Low, Medium, High):	High
Uncertainty in Existing Data (Low, Medium, High):	High
Importance of New Data (Low, Medium, High):	High

8. Fallback Position and Consequences Of Non-Execution

The fallback position is to use the existing database and not proceed with an Alloy 230 Code Case or to use Alloy 617 for the IHX application.

9. References

1. NGNP and Hydrogen Production Preconceptual Design Report, NGNP-01-RPT-001, Special Study 20.3 - High Temperature Process Heat Transfer and Transport, January 2007.

DDN HTS-01-11 ENVIRONMENTAL ASSESSMENT OF ALLOY 230

1. Assumptions (to be confirmed by the related R&D program)

Alloy 230 or a variant can be used at very high temperatures (up to 950ºC) for very long time periods (at least 10 years) without unacceptable degradation of mechanical properties or microstructure in a slightly impure helium environment containing CO, CO2, H2, H2O and O2, if alloy chemistry, fabrication processes and control of the helium environment in the reactor are maintained.

2. Current Database Summary

The current database for Alloy 230 contains limited information on the corrosion, microstructural stability and mechanical property changes that may occur as a function of time, temperature and environmental conditions following long term high temperature exposure to an impure helium environment. These data show substantial variability due primarily to slight differences in alloy chemistry and specific testing conditions. These data also indicate that surface effects including carburization or decarburization can occur during the testing performed and these changes can affect the high temperature mechanical properties of the alloy. The database contains little or no information on the effects of long-term environmental exposure at very high temperature on welded or diffusion bonded specimens. Aging and environment effects on Alloy 230 are closely related. The data suggest that the corrosion resistance of Alloy 230 in a high temperature impure helium environment may be greater than Alloy 617 under similar conditions.

3. Summary of Data Needed

Data needed include selected mechanical properties (yield, tensile strength and elongation; fatigue and creep strength; fracture toughness, etc.) following aging and environmental exposure at temperatures up to 1000ºC on standard, welded and diffusion bonded test specimens and validation that aging and environmental exposure do not produce an unacceptable reduction in mechanical properties.

4. Designer's Alternatives

The designer's alternatives are limited because aging and environmentally induced changes occur for all heat exchanger designs if Alloy 230 is used as the primary fabrication material and helium is used as the VHTR coolant; therefore, these changes need to be evaluated irrespective of heat exchanger design.

5. Selected Design Approach and Explanation

The proposed approach is to obtain an adequate database for design, analysis and test evaluation of compact heat exchangers using Alloy 230 or a variant and to support the development of ASME Section III Code Cases for the material and design.

6. Schedule Requirements

Results are required by the end of FY2010 to support design, procurement and testing of a prototype IHX module for verification of models prior to long-lead procurement of NGNP components in FY2013, which is required to support NGNP operation by the end of 2018.

7. Priority

Urgency (1-5):	1
Cost-Benefit (Low, Medium, High):	High
Uncertainty in Existing Data (Low, Medium, High):	High
Importance of New Data (Low, Medium, High):	High

8. Fallback Position and Consequences Of Non-Execution

The fallback position is to use the existing database and not proceed with an Alloy 230 Code Case or use Alloy 617 for the IHX application.

9. References

1. NGNP and Hydrogen Production Preconceptual Design Report, NGNP-01-RPT-001, Special Study 20.3 - High Temperature Process Heat Transfer and Transport, January 2007.

DDN HTS-01-12 GRAIN SIZE ASSESSMENT OF ALLOY 230

1. Assumptions (to be confirmed by the related R&D program)

Alloy 230 can retain acceptable fatigue and creep properties at high temperature for long time periods if the alloy chemistry and fabrication processes are carefully controlled. A key aspect of the control of fabrication processes includes the initial procurement of fine grain size material (ASTM 6-8). It is also assumed that a reasonably fine grain size can be maintained following diffusion bonding and high temperature long-term exposure.

2. Current Database Summary

The current database for Alloy 230 was primarily obtained using test specimens with a large grain size (ASTM 0-3). This range of grain size was used because this alloy was developed to optimize high temperature creep resistance and a large grain size will enhance this property. Virtually all creep testing performed previously was performed at relatively high stress levels and it was assumed that the deformation mechanism under these conditions was power law creep. The preferred IHX design for the NGNP is currently a compact type high efficiency heat exchanger that is fabricated from thin sheets of material that are subjected primarily to very low stresses over long time periods. This issue was recently evaluated by ORNL and it was concluded that under these conditions a different deformation mechanism (Nabarro-Herring creep) could dominate and this could result in the prediction of lower creep rates during testing by several orders of magnitude if a power law mechanism was used to evaluate the data rather than the alternate mechanism noted. The use of thin sheets for the fabrication of a compact type of IHX will require the use of smaller grain size material to increase fatigue resistance during operation and to reduce the possibility that grains approaching or greater than the sheet thickness will be present during fabrication. Therefore, because of these issues, the current database for Alloy 230 may be largely inapplicable for the current IHX application.

3. Summary of Data Needed

Data needed include the evaluation of creep, creep fatigue and fatigue properties of fine grained material; the determination of the specific mechanism that is applicable for the data evaluation under the conditions of low stress creep testing and the investigation of the effects of diffusion bonding and long term high temperature exposure on the residual grain size of the material.

4. Designer's Alternatives

The designer's alternative is to select an IHX design that does not require a thin-section material, such as a shell and tube IHX.

5. Selected Design Approach and Explanation

The proposed approach is to obtain an adequate database for design, analysis and test evaluation of compact heat exchangers using Alloy 230 or a variant and to support the development of ASME Section III Code Cases for the material and design.

6. Schedule Requirements

Results are required in early-FY2010 to support design, procurement and testing of a prototype IHX module for verification of models prior to long-lead procurement of NGNP components in FY2013, which is required to support NGNP operation by the end of 2018.

7. Priority

Urgency (1-5):	1
Cost-Benefit (Low, Medium, High):	High
Uncertainty in Existing Data (Low, Medium, High):	High
Importance of New Data (Low, Medium, High):	High

8. Fallback Position and Consequences Of Non-Execution

The fallback position is to use the existing database, not proceed with an Alloy 230 Code Case and use a traditional heat exchanger design or to use Alloy 617 for the IHX application.

9. References

1. NGNP and Hydrogen Production Preconceptual Design Report, NGNP-01-RPT-001, Special Study 20.3 - High Temperature Process Heat Transfer and Transport, January 2007.

DDN HTS-01-13 THERMAL STRUCTURAL MODELING METHODS

1. Assumptions (to be confirmed by the related R&D program)

Thermal structural modeling, for quasi-steady state and transient analyses, is required to provide a predictive basis for operation and performance characteristics of a plate type IHX. A suitable model will need to be developed for this task. The data obtained during the execution of DDNs 1-12 for Alloys 617 and Alloy 230 will need to be input into the model to provide a physical and mechanical design basis for the IHX alloy selected. The predictive output from the model will be compared and modified as appropriate, based on the results of prototype IHX testing and other verification and validation activities. These results will form the basis for development of the ASME Code Case for the alloy and IHX design selected. Some type of simplified modeling techniques or the development of specific modeling test specimens may be required due to the complexity of the model required.

2. Current Database Summary

The physical and mechanical properties database for the potential IHX structural alloys will be developed during the execution of DDNs 1-12. Other aspects of model development will be based on known finite element analysis (FEA) modeling techniques and known mathematical relationships of the selected IHX structure as a function of gas temperature, fluid flow, interface conditions, structural stresses and other factors. This assumes that a heat exchanger design not currently covered in ASME Section III or Section VIII is used. This includes all heat exchanger designs that are not variants of tube and shell design types. An actual design database required for ASME fabrication of a plate type compact heat exchanger is not available and will be developed in DDNs 13-16 and become a part of the ASME Code Case (DDNs 18-19).

3. Summary of Data Needed

Data needed include all information required to validate the operational and design basis of the plate type heat exchanger design selected, all information required to develop a theoretical design basis for comparison with empirical data resulting from the prototype IHX testing performed in DDN 17, and all information required to perform verification and validation of the analytical model developed.

4. Designer's Alternatives

The designer's alternative is to select an IHX design that utilizes an existing ASME design basis, such as a shell and tube IHX.

5. Selected Design Approach and Explanation

The proposed approach is to obtain an adequate database for design, analysis and test evaluation of compact heat exchangers using the selected structural alloy and to support the development of ASME Section III Code Cases for the material and design.

6. Schedule Requirements

Final results are required by the middle of FY2011 to support design, procurement and testing of prototype IHX modules prior to long-lead procurement of NGNP components in FY2013 and to support ASME Code Case development activities. All activities are required to support NGNP operation by the end of 2018.

7. Priority

Urgency (1-5):	1
Cost-Benefit (Low, Medium, High):	High
Uncertainty in Existing Data (Low, Medium, High):	High
Importance of New Data (Low, Medium, High):	High

8. Fallback Position and Consequences Of Non-Execution

The fallback position is to use the existing ASME design database and use an ASME Code approved heat exchanger design and material for the IHX application.

9. References

1. NGNP and Hydrogen Production Preconceptual Design Report, NGNP-01-RPT-001, Special Study 20.3 - High Temperature Process Heat Transfer and Transport, January 2007.

DDN HTS-01-14 STRESS-STRAIN MODELING METHODS

1. Assumptions (to be confirmed by the related R&D program)

Stress-strain structural modeling is required to provide a predictive basis for operation and performance characteristics of a plate type IHX. A suitable model will need to be developed and data obtained during the execution of DDNs 1-12 for Alloys 617 and Alloy 230 will need to be input to provide a physical and mechanical design basis for the IHX alloy selected. The predictive output from the model will be compared and modified, as appropriate, based on the results of prototype IHX testing and verification and validation activities. These results will form the basis for development of the ASME Code Case for the alloy and IHX design selected. Some type of simplified modeling techniques or the development of specific modeling test specimens may be required due to the complexity of the model required.

2. Current Database Summary

The physical and mechanical properties database for the potential IHX structural alloys will be developed during the execution of DDNs 1-12. Other aspects of model development will be based on known finite element analysis (FEA) modeling techniques and known mathematical relationships of the selected IHX structure as a function of gas temperature, fluid flow, interface conditions, structural details and other factors, assuming that a heat exchanger design not currently covered in ASME Section III or Section VIII is used. This includes all heat exchanger designs that are not variants of tube and shell design types. An actual design database required for ASME fabrication of a plate type compact heat exchanger is not available and will be developed in DDNs 13-16 and will become a part of the ASME Code Case (DDNs 18-19).

3. Summary of Data Needed

Data needed include all information required to validate the operational and design basis of the plate type heat exchanger design selected, all information required to develop a theoretical design basis for comparison with empirical data resulting from the prototype IHX testing performed in DDN 17 and all information required to perform a verification and validation of the analytical model developed.

4. Designer's Alternatives

The designer's alternative is to select an IHX design that utilizes an existing ASME design basis, such as a shell and tube IHX.

5. Selected Design Approach and Explanation

The proposed approach is to obtain an adequate database for design, analysis and test evaluation of compact heat exchangers using the selected structural alloy and to support the development of ASME Section III Code Cases for the material and design.

6. Schedule Requirements

Final results are required by the middle of FY2011 to support design, procurement and testing of a prototype IHX modules prior to long-lead procurement of NGNP components in FY2013 and to support ASME Code Case development activities. All activities are required to support NGNP operation by the end of 2018.

7. Priority

Urgency (1-5):	1
Cost-Benefit (Low, Medium, High):	High
Uncertainty in Existing Data (Low, Medium, High):	High
Importance of New Data (Low, Medium, High):	High

8. Fallback Position and Consequences Of Non-Execution

The fallback position is to use the existing ASME design database and use an ASME Code approved heat exchanger design and material for the IHX application.

9. References

1. NGNP and Hydrogen Production Preconceptual Design Report, NGNP-01-RPT-001, Special Study 20.3 - High Temperature Process Heat Transfer and Transport, January 2007.

DDN HTS-01-15 CRITERIA FOR ACCEPTABLE STRESS/STRAIN

1. Assumptions (to be confirmed by the related R&D program)

The criteria for acceptable stresses and strains and the development of acceptable safety factors are required for ASME Code Case development and to establish the operational boundaries of the IHX prototype testing activities. These criteria will be developed from a review of appropriate ASME Code documentation, discussion with appropriate ASME Code committee personnel and interaction during the development of the stress-strain model (DDN 14).

2. Current Database Summary

The current ASME design database for shell and tube heat exchangers provides general guidance for development of appropriate stress/strain criteria for the design of plate type heat exchanger systems.

3. Summary of Data Needed

Data needed include the results from DDNs 14 and 17, review of prior appropriate ASME documentation and discussions with appropriate ASME committee personnel.

4. Designer's Alternatives

The designer's alternative is to select an IHX design that utilizes an existing ASME design basis, such as a shell and tube IHX.

5. Selected Design Approach and Explanation

The proposed approach is to obtain an adequate database for design, analysis and test evaluation of compact heat exchangers using the selected structural alloy and to support the development of ASME Section III Code Cases for the material and design.

6. Schedule Requirements

Final results are required by the middle of FY2011 to support design, procurement and testing of a prototype IHX module prior to long-lead procurement of NGNP components in FY2013 and to support ASME Code Case development activities. All activities are required to support NGNP operation by the end of 2018.

7. Priority

Urgency (1-5):	1
Cost-Benefit (Low, Medium, High):	High
Uncertainty in Existing Data (Low, Medium, High):	High
Importance of New Data (Low, Medium, High):	High

8. Fallback Position and Consequences Of Non-Execution

The fallback position is to use the existing ASME design database and use an existing ASME Code approved heat exchanger design and material for the IHX application.

9. References

1. NGNP and Hydrogen Production Preconceptual Design Report, NGNP-01-RPT-001, Special Study 20.3 - High Temperature Process Heat Transfer and Transport, January 2007.

DDN HTS-01-16 PERFORMANCE MODELING METHODS

1. Assumptions (to be confirmed by the related R&D program)

Performance modeling methods are required to adequately evaluate the results of DDNs 13 and 14, provide guidance to testing performed in DDN 17 and provide the basis for the discussion of modeling performed during the development of the design code case (DDN 19).

2. Current Database Summary

The current ASME design database for shell and tube heat exchangers provides general guidance for development of appropriate performance modeling methods for the design of plate type heat exchanger systems.

3. Summary of Data Needed

Data needed include all information required to establish appropriate performance modeling methods.

4. Designer's Alternatives

The designer's alternative is to select an IHX design that utilizes an existing ASME design basis, such as a shell and tube IHX.

5. Selected Design Approach and Explanation

The proposed approach is to obtain an adequate database for design, analysis and test evaluation of compact heat exchangers using the selected structural alloy and to support the development of ASME Section III Code Cases for the material and design.

6. Schedule Requirements

Final results are required by the middle of FY2011 to support design, procurement and testing of a prototype IHX module prior to long-lead procurement of NGNP components in FY2013 and to support ASME Code Case development activities. All activities are required to support NGNP operation by the end of 2018.

7. Priority

Urgency (1-5):	1
Cost-Benefit (Low, Medium, High):	High
Uncertainty in Existing Data (Low, Medium, High):	High
Importance of New Data (Low, Medium, High):	High

8. Fallback Position and Consequences Of Non-Execution

The fallback position is to use the existing ASME design database and use an ASME Code approved heat exchanger design and material for the IHX application.

9. References

1. NGNP and Hydrogen Production Preconceptual Design Report, NGNP-01-RPT-001, Special Study 20.3 - High Temperature Process Heat Transfer and Transport, January 2007.

DDN HTS-01-17 IHX PERFORMANCE VERIFICATION

1. Assumptions (to be confirmed by the related R&D program)

IHX performance verification is required to empirically validate the IHX design, to resolve issues noted regarding the design and to serve as a primary input to the validation and verification process of the modeling performed. IHX performance verification includes test facility development, prototype IHX test module fabrication, IHX life prediction, IHX durability testing, IHX performance testing, IHX materials testing and interfaces with the models developed.

2. Current Database Summary

There is essentially no available database to support this DDN.

3. Summary of Data Needed

Data needed include all information required to establish the empirical basis for IHX performance, life prediction, durability and acceptability of fabricated materials in support of the ASME Design and Materials Code Cases (DDNs 18 and 19) and all information required to provide an empirical basis for model validation.

4. Designer's Alternatives

The designer's alternative is to select an IHX design that utilizes an existing ASME design basis, such as a shell and tube IHX.

5. Selected Design Approach and Explanation

The proposed approach is to obtain an adequate database for design, analysis and test evaluation of compact heat exchangers using the selected structural alloy and to support the development of ASME Section III Code Cases for the material and design.

6. Schedule Requirements

Final results are required in the second half of FY2011 to support design, procurement of long-lead NGNP components in FY2013 and to support ASME Code Case development activities. All activities are required to support NGNP operation by the end of 2018.

7. Priority

Urgency (1-5):	1
Cost-Benefit (Low, Medium, High):	High
Uncertainty in Existing Data (Low, Medium, High):	High
Importance of New Data (Low, Medium, High):	High

8. Fallback Position and Consequences Of Non-Execution

The fallback position is to use the existing ASME design database and use an ASME Code approved heat exchanger design and material for the IHX application.

9. References

1. NGNP and Hydrogen Production Preconceptual Design Report, NGNP-01-RPT-001, Special Study 20.3 - High Temperature Process Heat Transfer and Transport, January 2007.

DDN HTS-01-18 MATERIALS CODE CASE

1. Assumptions (to be confirmed by the related R&D program)

The IHX primary to secondary system interface will be designed as an ASME Section III component and the selected IHX fabrication alloy for this interface (Alloy 617 or 230) will not be listed in ASME Section II for ASME Section III service in the timeframe required.

2. Current Database Summary

The current mechanical and physical properties database for Alloy 617 is based primarily on multiple heats of standard ASME SB-168 plate material with a relatively large grain size (ASTM 0-3), and material of this grain size is not consistent with the needs of compact heat exchangers. The database is reasonably complete for the temperature range of room temperature to 982ºC. The database for Alloy 617CCA, developed within the Fossil Ultrasupercritical (USC) Program, is believed to be limited to one heat of standard ASME SB-168 and about 10-15 long term creep rupture tests. Standard Alloy 617 (which envelopes Alloy 617CCA) is listed in ASME Section II for application to ASME Sections I and VIII, Division 1. The ASME does not currently allow Alloy 617 for Section III applications, and it is anticipated that a Section III Code Case would need to be submitted and approved for a nuclear power application to be implemented using this material. The database also includes a draft ASME Code Case that was submitted previously for approval to the ASME. This draft material code case is not considered to be an adequate substitute for DDN 18 and contains several technical issues that will need to be resolved.

The current mechanical properties database for Alloy 230 is based primarily on multiple heats of standard ASME SB-435 plate material with a relatively large grain size (ASTM 0-3) and, therefore, is not consistent with the needs of compact heat exchangers. The database is reasonably complete for the temperature range of room temperature to 982ºC. Alloy 230 is listed in ASME Section II for application to ASME Sections I and VIII, Division 1. The ASME does not currently allow Alloy 230 for Section III applications and it is anticipated that a Section III Code Case would need to be submitted and approved for a nuclear power application to be implemented using this material. No attempt has been made in the past to draft an ASME Section III Code Case that includes this material.

3. Summary of Data Needed

Data needed includes all information required to draft a materials code case for the alloy selected and resolve issues that may occur during further discussions with the ASME during the code case approval process and during subsequent discussions with the NRC during NGNP licensing.

4. Designer's Alternatives

The designer's alternative is to select an IHX fabrication alloy listed in ASME Section II for application in ASME Section III.

5. Selected Design Approach and Explanation

The proposed approach is to obtain an adequate database for design, analysis and test evaluation of compact heat exchangers using the selected structural alloy and to support the development of ASME Section III Code Cases for the material and design.

6. Schedule Requirements

Final results are required during the first half of FY2012 to support NRC licensing discussions associated with the NGNP. All activities are required to support NGNP operation by the end of 2018.

7. Priority

Urgency (1-5):	1
Cost-Benefit (Low, Medium, High):	High
Uncertainty in Existing Data (Low, Medium, High):	High
Importance of New Data (Low, Medium, High):	High

8. Fallback Position and Consequences Of Non-Execution

The fallback position is to use the existing ASME design database and use an ASME Code approved heat exchanger design and material for the IHX application.

9. References

1. NGNP and Hydrogen Production Preconceptual Design Report, NGNP-01-RPT-001, Special Study 20.3 - High Temperature Process Heat Transfer and Transport, January 2007.

DDN HTS-01-19 DESIGN CODE CASE

1. Assumptions (to be confirmed by the related R&D program)

The IHX primary to secondary system interface will be designed as an ASME Section III component and the selected IHX compact heat exchanger design will not be included in ASME Section III in the required timeframe. This assumption regarding the classification of the IHX heat transfer surface will be further addressed in a recommended special study (See Section 6.4.2)

2. Current Database Summary

The current ASME design database for shell and tube heat exchangers provides general guidance for the development of a design code case for the design of plate type heat exchanger systems.

3. Summary of Data Needed

Data needed includes all information required to draft a design code case for the IHX design selected, resolve issues that may occur during further discussions with the ASME during the code case approval process and during subsequent discussions with the NRC during NGNP licensing.

4. Designer's Alternatives

The designer's alternatives are to select an IHX design listed in ASME Section VIII and use the design as the basis for a new ASME Section III Code Case or to assume that the IHX primary to secondary interface will not be designed as an ASME Section III class component.

5. Selected Design Approach and Explanation

The proposed approach is to obtain an adequate database for design, analysis and test evaluation of compact heat exchangers using the selected structural alloy and to support the development of ASME Section III Code Cases for the material and design.

6. Schedule Requirements

Final results are required during the first half of FY2012 to support NRC licensing discussions associated with the NGNP. All activities are required to support NGNP operation by the end of 2018.

7. Priority

Urgency (1-5):	1
Cost-Benefit (Low, Medium, High):	High
Uncertainty in Existing Data (Low, Medium, High):	High
Importance of New Data (Low, Medium, High):	High

8. Fallback Position and Consequences Of Non-Execution

The fallback position is to use the existing ASME design database, to use an ASME Code approved heat exchanger design and to use material for the IHX application or to proceed assuming that a Section III design is not required.

9. References

1. NGNP and Hydrogen Production Preconceptual Design Report, NGNP-01-RPT-001, Special Study 20.3 - High Temperature Process Heat Transfer and Transport, January 2007.

6.3.2 Intermediate Heat Exchanger – Ceramic/Composite

The IHX is a critical high-temperature component of the NGNP. To attain the cost and performance goals of the NGNP and related commercial process heat plants, a plate-type compact heat exchanger, which is characterized by thin metal cross-sections, has been selected as the initial reference for the NGNP design. The reference material for the IHX is Alloy 617 and Alloy 230 has been identified as a backup material.

Given the demanding operating conditions for the IHX, it has been concluded that development of advanced (ceramic and/or composite) heat exchangers should be pursued in parallel with the reference design. The DDNs given in Section 6.3.2 support the advanced ceramic/composite IHX concept.

The basic technology associated with ceramics or composites is reasonably well developed for several non-nuclear related areas. The design and fabrication of a ceramic/ composite IHX has not been performed previously; however, the capabilities, properties and fabrication techniques for the ceramics/composites considered are well known and have been applied for the development of specific products that are smaller in scale and for different purposes than the IHX application. The information and plans provided for the DDNs given below are at a very high level compared to the metallic alloy(s) R&D plan(s) discussed in Section 6.3.1. As described earlier, the IHX will be divided into high temperature (IHX A) and low temperature (IHX B) units. The preconceptual design of the NGNP anticipates replacement of the initial metallic high temperature IHX unit prior to the 60-year lifetime of the plant. As noted in Section 6.3.2.2, below, the minimum operating life target for the high temperature section of the IHX is [10] years, and there is a potential that this initial metallic unit will be replaced with a ceramic/ composite unit if the technology can be demonstrated for this application and an IHX can be fabricated at that point.

This task also has potential relevance to the development of the process coupling heat exchanger discussed in Section 7 of this Preconceptual Design Report.

6.3.2.1 Functions

1. Contain the primary helium coolant and secondary heat transport system (SHTS) working fluid
2. Transfer thermal energy from the primary helium coolant to the SHTS working fluid

6.3.2.2 Key Requirements

The specified service conditions and other key requirements influencing DDNs for the IHX are given below:

- Nominal IHX primary helium inlet temperature of 950ºC and primary outlet temperature of 337ºC
- Secondary helium inlet temperature of 287ºC
- Nominal 900ºC secondary IHX outlet temperature
- Helium in both the primary coolant loop and secondary HTS with specified [TBD] impurity levels
- Primary loop pressure of 9 MPa
- Primary to secondary loop ΔP and interior to exterior ΔP near zero (essentially pressure balanced at [<200 kPa])
- Forced outage allocation is [<1%]
- Operating life:
    - Low-temperature sections ([<760ºC]): 60 equivalent full-power years
    - High-temperature sections ([>760ºC]): [>10] equivalent full-power years

6.3.2.3 Design Data Needs

A total of 6 DDNs have been identified for the development of the ceramic IHX (Table 6.3-2). These DDNs address materials characterization and qualification, development of methods and criteria for design, analysis and performance verification, manufacturing technology and codes and standards development.

Table 6.3-2: Design Data Needs for Ceramic IHX

DDN	Title
HTS-02	**Intermediate Heat Exchanger - Ceramic**
HTS-02-01	Review Existing Technology
HTS-02-02	Materials Property Database
HTS-02-03	Design Methods
HTS-02-04	Performance Verification
HTS-02-05	Manufacturing Technology
HTS-02-06	Codes and Standards

DDN HTS-02-01 REVIEW EXISTING TECHNOLOGY

1. Assumptions (to be confirmed by meetings with ceramics/composites vendor organizations and related R&D)

One or more ceramic or composite materials can be identified for development of a plate-type or other compact high temperature IHX design. The ceramic/composite materials and the manufacturing possesses associated with these materials are being developed commercially by several organizations and it is assumed that these technologies can be adapted for design and fabrication of a compact IHX of the capacity required by the NGNP. It is further assumed that the final manufactured form of the material will contain the high temperature helium coolant, be fully dense or fully impregnated and have adequate properties for this application. The cost associated with using the material selected is expected to be high compared to the application of conventional metallic alloys noted in Section 6.3.1, but assumed to be within acceptable economic parameters. The materials identified are assumed to be capable of successfully operating in the high temperature section of the IHX for the full plant life. The materials that are most likely to be applicable for this application include SiC, Si3N4, SiAlON, Al2O3, MoSi2, Cordierite, Ti3SiC2, impregnated carbon/carbon composite, or impregnated SiC/SiC composite.

2. Current Database Summary

A current database comparable to the existing metallic alloy database does not exist in the open literature for ceramics/composite materials. The physical and mechanical properties of these materials are strongly dependent on the pedigree of the original material (normally powders, fibers or vapors), consolidation techniques and fabrication processes. It is anticipated that specific commercial organizations have a limited database developed for other applications that can be further developed and applied to the IHX application and this will be evaluated during Conceptual Design. Various fabricated forms of SiC and Si3N4 currently appear to hold the most promise for development for the IHX because of the relatively larger bases of information associated with these materials, relatively high toughness and resistance to thermal stresses and high temperature properties. These materials also have a very high resistance to corrosion under various conditions and could potentially be applied to fabrication of the process coupling heat exchanger.

3. Summary of Data Needed

Data needed includes establishing requirements, assessment of the current databases and selection of vendor organization(s) to facilitate further developmental activities.

4. Designer's Alternatives

A conventional metallic alloy of the type discussed in Section 6.3.1 or a higher temperature, higher performance metallic alloy could be sought for the replacement of IHX A. The costs associated with further replacements of the conventional metallic alloy component at periodic intervals would need to be accepted. The feasibility, lifetime and economics of any

higher temperature metallic alloys identified would need to be evaluated, along with its ASME Code status and R&D requirements.

5. Selected Design Approach and Explanation

The proposed approach is to obtain an adequate database for design, analysis and test evaluation of compact heat exchangers using a ceramic or composite material and to support the development of ASME Section III Code Cases for the material and design.

6. Schedule Requirements

Assuming that the initial IHX reaches its minimum design life of ≥10 years, the earliest that a replacement IHX would be required for the NGNP prototype is ~FY2028. However, there is significant risk that an earlier replacement would be required. Further, the availability of a ceramic IHX, or its equivalent, may become prerequisite to practical commercial NGNP applications that are expected to follow initial operation of the NGNP in 2018. For this reason, the development of a ceramic IHX has been given some degree of urgency. It is believed at present that the earliest that a ceramic IHX could be selected, developed and qualified is FY2016. That is the basis for the adopted schedule, which calls for the fulfillment of DDN HTS-02-01 requirements by mid-2008.

7. Priority

Urgency (1-5):	3
Cost-Benefit (Low, Medium, High):	Medium
Uncertainty in Existing Data (Low, Medium, High):	High
Importance of New Data (Low, Medium, High):	High

8. Fallback Position and Consequences Of Non-Execution

The fallback position is to select a compact IHX design fabricated from Alloys 617 or 230 or other metallic alloys that would require replacement at periodic intervals.

9. References

1. NGNP and Hydrogen Production Preconceptual Design Report, NGNP-01-RPT-001, Special Study 20.3 - High Temperature Process Heat Transfer and Transport, January 2007.

DDN HTS-02-02 MATERIALS PROPERTIES DATABASE

1. Assumptions (to be confirmed by meetings with ceramics/composites vendor organizations and related R&D)

The information required includes a mechanical and physical properties database, fracture behavior based on a probability model, helium environment compatibility data and long-term environmental aging data. The properties of these materials are strongly dependent on the pedigree of the original material (normally powders, fibers or vapors), consolidation techniques and fabrication processes; therefore, these properties would need to be developed on materials supplied by specific organizations with expertise for these materials and ultimately on the fabricated material selected for the IHX application. The primary physical and mechanical properties to be investigated include density, thermal conductivity, emissivity, coefficient of thermal expansion, specific heat, flexural strength, Young's modulus, fracture toughness, Poisson's ratio, thermal stress resistance factor, creep resistance, fatigue resistance, aging changes, environmental changes, helium leak resistance and tritium leak resistance. These properties will be evaluated for the IHX application and input to modeling and performance verification studies.

2. Current Database Summary

A current database comparable to the existing metallic alloy database does not exist in the open literature; however, fairly detailed information has been developed for specific product applications and it is anticipated that this database can be further developed for the IHX application and this will be evaluated during Conceptual Design. Additional information will need to be obtained in an R&D program specifically directed at the NGNP IHX.

3. Summary of Data Needed

Data needed includes assessment of the current database and development of additional data as a part of an R&D program.

4. Designer's Alternatives

A conventional metallic alloy of the type discussed in Section 6.3.1 or a higher temperature, higher performance metallic alloy could be sought for the replacement of IHX A.

5. Selected Design Approach and Explanation

The proposed approach is to obtain an adequate database for design, analysis and test evaluation of compact heat exchangers using a ceramic or composite material and to support the development of ASME Section III Code Cases for the material and design.

6. Schedule Requirements

Based on selection, development and qualification of a ceramic IHX by FY2016, fulfillment of DDN HTS-02-02 would be required by the end of FY2009.

7. Priority

Urgency (1-5):	3
Cost-Benefit (Low, Medium, High):	Medium
Uncertainty in Existing Data (Low, Medium, High):	High
Importance of New Data (Low, Medium, High):	High

8. Fallback Position and Consequences Of Non-Execution

The fallback position is to select a compact IHX design fabricated from Alloys 617 or 230 or another metallic alloy that would require replacement at periodic intervals.

9. References

1. NGNP and Hydrogen Production Preconceptual Design Report, NGNP-01-RPT-001, Special Study 20.3 - High Temperature Process Heat Transfer and Transport, January 2007.

DDN HTS-02-03 DESIGN METHODS

1. Assumptions (to be confirmed by meetings with ceramics/composites vendor organizations and related R&D)

The information required includes sizing and performance information and methods, thermal and structural modeling and failure probability modeling. The predictive output from the modeling will be compared and modified, as appropriate, based on the results of prototype IHX testing and other verification and validation activities. These results will form the basis for development of ASME Code bases for the ceramic/composite and IHX design selected. The methods used will be similar to those described in Section 6.3.1. Simplified modeling techniques or the development of specific modeling test specimens may be required due to the complexity of the models required. This activity will be performed in conjunction with the metallic alloy development program.

2. Current Database Summary

The current modeling database is application specific and is being developed by various organizations. Some of this information should be directly relevant to the IHX application; however, it is anticipated that new or modified models will be required and this will be evaluated during Conceptual Design. NASA currently has the best probabilistic modeling capability in the United States and this capability is being applied to the development of ceramics and composites for various applications. The INL currently has a contract with NASA to apply this modeling capability to the development of the NGNP core graphite moderator blocks.

3. Summary of Data Needed

Data needed includes the results of stress strain modeling, thermal structural modeling, and failure probability under postulated conditions.

4. Designer's Alternatives

A conventional metallic alloy of the type discussed in Section 6.3.1 or a higher temperature, higher performance metallic alloy could be sought for the replacement of IHX A.

5. Selected Design Approach and Explanation

The proposed approach is to obtain an adequate database for design, analysis and test evaluation of compact heat exchangers using a ceramic or composite material and to support the development of ASME Section III Code Cases for the material and design.

6. Schedule Requirements

Based on selection, development and qualification of a ceramic IHX by FY2016, fulfillment of DDN HTS-02-03 would be required by the end of FY2010.

7. Priority

Urgency (1-5):	3
Cost-Benefit (Low, Medium, High):	Medium
Uncertainty in Existing Data (Low, Medium, High):	High
Importance of New Data (Low, Medium, High):	High

8. Fallback Position and Consequences Of Non-Execution

The fallback position is to select a compact IHX design fabricated from Alloys 617 or 230 or another metallic alloy that would require replacement at periodic intervals.

9. References

1. NGNP and Hydrogen Production Preconceptual Design Report, NGNP-01-RPT-001, Special Study 20.3 - High Temperature Process Heat Transfer and Transport, January 2007.

DDN HTS-02-04 PERFORMANCE VERIFICATION

1. Assumptions (to be confirmed by meetings with ceramics/composites vendor organizations and related R&D)

IHX performance verification is required to empirically validate the IHX design, to resolve issues noted regarding the design and to assist the validation and verification of the analytical modeling performed. IHX performance verification includes test facility development, prototype IHX test module fabrication, IHX life prediction, IHX durability testing, IHX performance testing, IHX materials testing and interface with the models developed. This activity will be performed in conjunction with the metallic alloy development program and will include structural and performance testing at the cell/stack level and the module level.

2. Current Database Summary

There is essentially no available database to support this DDN.

3. Summary of Data Needed

Data needed includes all information required to establish the empirical basis for IHX performance, life prediction, durability and acceptability of fabricated materials in support of the ASME Design and Materials Code Cases (HTS-02-06) and all information required to provide an empirical basis for model validation.

4. Designer's Alternatives

A conventional metallic alloy of the type discussed in Section 6.3.1 or a higher temperature, higher performance metallic alloy could be sought for the replacement of IHX A.

5. Selected Design Approach and Explanation

The proposed approach is to obtain an adequate database for design, analysis and test evaluation of compact heat exchangers using a ceramic or composite material and to support the development of ASME Section III Code Cases for the material and design.

6. Schedule Requirements

Based on selection, development and qualification of a ceramic IHX by FY2016, fulfillment of DDN HTS-02-04 would be required by the end of FY2013.

7. Priority

Urgency (1-5):	3
Cost-Benefit (Low, Medium, High):	Medium
Uncertainty in Existing Data (Low, Medium, High):	High
Importance of New Data (Low, Medium, High):	High

8. Fallback Position and Consequences Of Non-Execution

The fallback position is to select a compact IHX design fabricated from Alloys 617 or 230 or another alloy that would require replacement at periodic intervals.

9. References

1. NGNP and Hydrogen Production Preconceptual Design Report, NGNP-01-RPT-001, Special Study 20.3 - High Temperature Process Heat Transfer and Transport, January 2007.

DDN HTS-02-05 MANUFACTURING TECHNOLOGY

1. Assumptions (to be confirmed by meetings with ceramics/composites vendor organizations and related R&D)

The bulk of manufacturing technology issues will be addressed during interactions with selected vendors. Issues that are specific to the IHX application include the development of ceramic-to-ceramic joints, ceramic-to-metal joints and core/piping interface development. Also, integrated with the development of these IHX features will be fabrication development and design verification of thermal insulation for IHX input and output headers and distribution piping, including both internally and externally applied insulation. These issues will be resolved by an R&D program or by other means. Manufacturing technology has been developed to various levels for other applications; however, development specific to the IHX application will be required.

2. Current Database Summary

There is a fairly large database available to support this DDN; however, this database was developed for other applications and the applicability of this information will need to be reviewed during Conceptual Design.

3. Summary of Data Needed

Data needed includes general data from the open literature and specific test results required to provide the basis for integrating a ceramic/composite IHX within and with a metallic or composite piping system.

4. Designer's Alternatives

A conventional metallic alloy of the type discussed in Section 6.3.1 or a higher temperature, higher performance metallic alloy could be sought for the replacement of IHX A.

5. Selected Design Approach and Explanation

The proposed approach is to obtain an adequate database for design, analysis and test evaluation of compact heat exchangers using a ceramic or composite material and to support the development of ASME Section III Code Cases for the material and design.

6. Schedule Requirements

Based on selection, development and qualification of a ceramic IHX by FY2016, fulfillment of DDN HTS-02-05 would be required by the end of FY2013.

7. Priority

Urgency (1-5):	3
Cost-Benefit (Low, Medium, High):	Medium
Uncertainty in Existing Data (Low, Medium, High):	High
Importance of New Data (Low, Medium, High):	High

8. Fallback Position and Consequences Of Non-Execution

The fallback position is to select a compact IHX design fabricated from Alloys 617 or 230 or another alloy that would require replacement at periodic intervals.

9. References

1. NGNP and Hydrogen Production Preconceptual Design Report, NGNP-01-RPT-001, Special Study 20.3 - High Temperature Process Heat Transfer and Transport, January 2007.

DDN HTS-02-06 CODES AND STANDARDS

1. Assumptions (to be confirmed by the related R&D program)

The IHX primary to secondary system interface will be designed as an ASME Section III component and the selected IHX core fabrication material will not be listed in ASME Section II for ASME Section III service. The code case for ceramics/composites will include design information for the specific IHX application and be separate from the metallic alloy code case. This DDN will include both ASTM standards and ASME Code development. Full consensus standards, design or materials codes will be initiated in ASTM Subcommittee C28.07 on Ceramic Matrix Composites and the ASME Subgroup on Ceramic Pressure Equipment; however, other variations using other subcommittees are also possible.

2. Current Database Summary

Standards for specific applications have been developed by the NASA High Speed Research/Enabling Propulsion Program (HSR/EPM) in the United States and the Petroleum Energy Center (PEC) in Japan. Standards that have direct applicability to the NGNP IHX have not been written. Two efforts are currently underway to provide design codes for ceramic matrix composites (CMC): (1) the Military Handbook 17 (Mil-Hdbk-17) CMC effort and (2) the ASME Task Group on Ceramic and Graphite Pressure Equipment. The ASME effort appears to have more direct applicability for the NGNP IHX application. The ASME task group is currently divided into two subtask groups with the subtask on Ceramic Pressure Equipment specifically targeted on CMCs. The other subtask group is the Subtask Group on Impervious Graphite. Each of these subgroups is currently pursuing codification issues using different approaches: (1) the development of a code case to demonstrate that brittle materials can be used in pressurized equipment is being pursued by the Subgroup on Impervious Graphite, and (2) the development of a stand alone section of the ASME Code is being pursued by the CMC subgroup. This subgroup currently has a 100+ page draft under review. This draft section employs reliability based design rather than design by rule or factor of safety design by analysis. Work on this draft section is ongoing and is dependent on development of standards, databases and design methodologies.

3. Summary of Data Needed

Data needed includes all information required to draft materials and design code cases for the material and fabrication method selected and resolve issues that may occur during further discussions with the ASME during the code case approval process and during subsequent discussions with the NRC during NGNP licensing.

4. Designer's Alternatives

A conventional metallic alloy of the type discussed in Section 6.3.1 or a higher temperature, higher performance metallic alloy could be used for the replacement of IHX A.

Further replacement costs of the conventional alloy component at periodic intervals would need to be accepted. The lifetime of the higher temperature metallic alloys and the ASME Code status of the higher temperature material selected would need to be evaluated.

5. Selected Design Approach and Explanation

The proposed approach is to obtain an adequate database for design, analysis and test evaluation of compact heat exchangers using the selected structural ceramic material and to support the development of ASME Section III Code Cases for the material and design.

6. Schedule Requirements

Based on selection, development and qualification of a ceramic IHX by FY2016, fulfillment of DDN HTS-02-06 would be required by the end of FY2013.

7. Priority

Urgency (1-5):	3
Cost-Benefit (Low, Medium, High):	Medium
Uncertainty in Existing Data (Low, Medium, High):	High
Importance of New Data (Low, Medium, High):	High

8. Fallback Position and Consequences Of Non-Execution

The fallback position is to select a compact IHX design fabricated from Alloys 617 or 230 or another alloy that would require replacement at periodic intervals.

9. References

1. NGNP and Hydrogen Production Preconceptual Design Report, NGNP-01-RPT-001, Special Study 20.3 - High Temperature Process Heat Transfer and Transport, January 2007.

6.3.3 SHTS Helium-Mixing Chamber

The reference preconceptual design of the PBMR-based NGNP incorporates a single hydrogen production train, versus the four that would be provided in a corresponding NGNP commercial plant. To allow the use of a prototypical PCHX, nominally ¼ of the high temperature flow from the IHX will be routed directly to the PCHX, with the remaining ¾ of the flow being sent to the SG. There is a requirement to rejoin the stream exiting the PCHX with the remainder of the helium. Given the significant temperature differences in the respective streams at the point of rejoining, a helium-mixing chamber is required to assure reasonably uniform temperature distribution after rejoining and to avoid potential damage to ducts and other components (e.g., steam generator) due to thermal effects.

A performance test is required as part of the HTS R&D program to validate the performance of the mixing chamber.

6.3.3.1 Functions

1. Contain and transport a portion of the secondary helium coolant from IHX A and from the PCHX helium outlet to the SG inlet.
2. Mix these flows from the IHX secondary outlet (nominal 900ºC) and the PCHX (nominal 660ºC) in such a way that excessive thermal stresses to the mixing chamber and/or downstream piping is avoided

6.3.3.2 Key Requirements

The specified service conditions and other key requirements influencing the DDN for the helium-mixing chamber are given below:

- Nominal IHX A secondary outlet helium temperature: 900ºC
- Nominal SHTS pressure: 8.5MPa
- Nominal PCHX secondary outlet helium temperature:
  - HPS in operation: 660ºC
  - HPS not in operation: 900ºC
- Total SHTS flow rate: 159.6 kg/s
  - Flow to PCHX: 39.9 kg/s
  - Flow to Steam Generator: 119.7 kg/s
- Nominal operating life of the mixing chamber [equivalent to plant life]

6.3.3.3 Design Data Needs

A single DDN has been identified to support the development of the mixing chamber. This DDN addresses mixing chamber performance verification.

DDN HTS-03-01 HELIUM-MIXING CHAMBER PERFORMANCE TEST

1. Assumptions (to be confirmed during conceptual design)

A mixing chamber fabricated from a high temperature metallic alloy will be required in the secondary circuit to minimize piping design issues associated with helium streams that join at two different temperatures and mass flow rates. Performance verification testing will need to be performed on a prototype mixing chamber following alloy selection and fabrication. This testing will be performed in the metallic alloy prototype IHX performance verification facility noted in DDN-HTS-01-17.

2. Current Database Summary

The helium-mixing chamber design, including selection of materials, has not yet been developed. Accordingly, the availability and relevance of existing data to this specific application are not known.

3. Summary of Data Needed

Data needed include performance and operating experience required to validate the selected design, based on the procurement specification for the prototype helium-mixing chamber.

4. Designer's Alternatives

None

5. Selected Design Approach and Explanation

The proposed approach is to obtain an adequate database for design, analysis and test evaluation of a helium-mixing chamber fabricated from a high temperature metallic alloy.

6. Schedule Requirements

Performance verification of the helium-mixing chamber would need to be completed prior to the end of FY2012 to support procurement in FY2013.

7. Priority

Urgency (1-5):	1
Cost-Benefit (Low, Medium, High):	High
Uncertainty in Existing Data (Low, Medium, High):	High
Importance of New Data (Low, Medium, High):	High

8. Fallback Position and Consequences Of Non-Execution

The fallback position is to select an alternate design for the secondary circuit.

9. References

None

6.3.4 High Temperature Ducts and Insulation

High-temperature ducts and insulation are utilized within the PHTS and SHTS pressure boundary piping to direct helium flow from the reactor to IHX A (nominally at 950ºC), from IHX A to IHX B (nominally at 760oC) and from the secondary IHX A outlet to the PCHX and SG (nominally at 900ºC). The high-temperature ducts and insulation are contained within pressure boundary pipes of low-alloy (SA 508/533) steel that are designed to ASME Section III requirements. On this basis, the pressure boundary pipes must be maintained at 371ºC or less, based on Section III requirements for normal operational service conditions. The current design, in common with the PBMR-DPP high-temperature piping and ducts, is to provide both passive internal insulation and active cooling of the PHTS pressure boundary piping containing the hottest fluids (Reactor to IHX A and IHX A to IHX B). The IHX A vessel is also to be actively cooled. However, the highest temperature in the NGNP PHTS nominally exceeds that of the DPP by 50ºC and available coolant flow for active cooling is at 350ºC vs. ~120ºC in the DPP. These factors imply incremental challenges for the ducts and insulation.

The high temperature piping connecting the IHX A secondary outlet to the PCHX and helium mixing-chamber (nominally at 900ºC) and the piping connecting the PCHX to the helium-mixing chamber (nominally at 659ºC) will initially be evaluated with passive insulation systems only and with no active cooling. Other piping sections will operate at 350ºC or less and no DDNs have been identified for these components.

Note that during conceptual design, alternate insulation concepts will be evaluated for both the PHTS and SHTS (see Section 6.4.2).

A single DDN has been identified to address the need for verification of the performance of the high temperature ducts and insulation for the NGNP and to confirm the relative effectiveness of alternate insulation schemes.

6.3.4.1 Functions

1. Contain and transport primary circuit helium
2. Contain and transport secondary circuit helium

6.3.4.2 Key Requirements

The specified service conditions and other key requirements influencing the DDN for the helium hot duct are given below:

- Nominal reactor outlet helium at 950ºC
- Nominal reactor outlet helium pressure at 8.8 MPa
- Nominal operating life of the hot duct and other high temperature piping systems equivalent to plant life

- Nominal IHX secondary outlet helium at 900ºC
- Nominal IHX secondary outlet helium at 8.4 MPa

6.3.4.3 Design Data Needs

One DDN has been identified for the development of the high-temperature ducts and insulation systems. This DDN addresses insulation systems, hot duct liner characterization, metallic materials selection and qualification and performance verification of the hot duct piping and other hot piping prototypes.

DDN HTS-04-01 HIGH TEMPERATURE DUCTS AND INSULATION

1. Assumptions (to be confirmed during the conceptual design)

All primary piping will be designed to ASME Section III Class 1 requirements. All secondary piping will be designed to ASME Section III Class 2 or 3 requirements. Piping design will adequately consider the effects of thermal expansion. Piping systems will be designed to have negligible creep effects. All insulation systems will maintain structural integrity and adequate insulation properties over the lifetime of the piping system. All piping systems will maintain the helium coolant with acceptable degradation and negligible leakage over the lifetime of the piping system.

2. Current Database Summary

Significant and detailed databases exist for piping systems of the type noted. These were developed both within the German High Temperature Reactor (HTR) Program and as part of the PBMR-DPP development. These databases will be reviewed during conceptual design.

3. Summary of Data Needed

Data needed comprises experimental verification and validation of the designs selected for the NGNP PHTS and SHTS high-temperature ducts and insulation.

4. Designer's Alternatives

An alternative would be reliance on analytical modeling that is extrapolated from the PBMR-DPP.

5. Selected Design Approach and Explanation

The proposed approach is to experimentally verify and validate the materials and design selections associated with key high-temperature ducts and insulation, using fabricated prototypes. This proposed approach will include the evaluation of mechanical properties, helium environmental effects, aging effects and microstructural changes on the metallic alloys selected; long term validation of the acceptability and continued effectiveness of the insulation systems; and long term evaluation of the prototype piping systems to maintain acceptable levels of performance under operational and off normal conditions. One key objective is to support the potential selection of more economic designs with passive internal insulation.

6. Schedule Requirements

Performance verification of the reference PHTS high-temperature ducts and insulation designs needs to be completed prior to the end of FY2010 in order to support licensing submittals.

7. Priority

Urgency (1-5):	1
Cost-Benefit (Low, Medium, High):	High
Uncertainty in Existing Data (Low, Medium, High):	High
Importance of New Data (Low, Medium, High):	High

8. Fallback Position and Consequences Of Non-Execution

The fallback position is to analytically extrapolate the PBMR-DPP high-temperature duct and insulation design for the higher-temperature NGNP. A related consequence is the potential that a simpler and more economic passive design will not be realized.

9. References

None

6.4 HTS COMPLEXITY, RISKS, AND FUTURE STUDIES

6.4.1 Complexity and Risks

There are a number of complexities and risks associated with the demanding service of the NGNP HTS. First and foremost, a 60-year operating lifetime is being required for many components in both the PHTS and SHTS at temperatures higher than now covered in ASME Section III. The components experiencing the highest temperatures are the heat transfer core components of the IHX units in the PHTS and the hot ducts and insulation structures within the pressure boundary in both the PHTS and the SHTS. These and other items are noted and discussed briefly below.

The higher temperature IHX (IHX A) will operate with an inlet temperature of nominally 950ºC and a metallic material capable of sustaining this temperature for the full 60-year lifetime cannot at present be confirmed; the design assumes replaceability on a minimum [10]-year schedule. Even so, qualified materials do not currently exist nor are there design codes and standards ready for application at such high temperatures. The other highest temperature components in the HTS are IHX B (inlet at ~760ºC), hot ducting (950ºC) between the reactor and IHX A, ducting between IHX A and IHX B (~760ºC), and the SHTS hot ducting between IHX A and the PCHX and SG (900ºC). All of these push the limits of materials capability and design methods. DDNs (see Section 6.3) have been identified relative to these concerns and their completion will provide information and methods to overcome these difficulties.

The HTS current reference pressure boundary material, SA-508/SA-533, is by ASME Code rules limited in temperature to 371ºC for normal operation. Therefore, active cooling and/or insulation will be needed to ensure that this temperature is not exceeded. The pressure boundary includes all piping and the IHX vessels in the PHTS; for the SHTS it includes all piping, the helium-mixing chamber vessel, and the circulator vessel. The hottest ducts in the PHTS will mimic the design of the hot duct for the PBMR DPP, including an outer pressure boundary pipe surrounding a three layer hot duct consisting of an inner liner, insulation, and the flow containing boundary. In the DPP design, active cooling is provided by a ~120ºC helium stream in the annulus between the hot duct proper and the pressure boundary. The coolest return stream available for pressure boundary cooling in the PHTS is 350ºC so that additional insulation may be needed in this application. Each of the components of the PHTS and the SHTS (vessels and piping) needs to be examined critically relative to the necessary cooling scheme.

There are unanswered questions regarding the appropriate design basis and associated regulatory treatment of the IHX heat transfer surface as a pressure boundary. The definition of this surface as a traditional Class 1 pressure boundary has implications for design that may not be consistent with the actual role of this component in control of radionuclide release. Unlike the remaining pressure boundary components, the IHX heat transfer surface is essentially pressure balanced and enclosed by the SHTS. At least two coincident failures (of the IHX and the SHTS pressure boundary) would be required to provide direct communication between the primary

helium coolant and the environment. In some designs, secondary loop isolation valves have been suggested as an alternative means of "terminating" the primary pressure boundary. While this alternative is worthy of consideration, such valves would be technically challenging and very expensive, particularly if required to be leak tight against any significant differential pressure. It is not at all obvious that including these valves is necessary for public or investment protection. Further consideration of these issues is beyond the scope of pre-conceptual design, and has been identified as the subject of a future study in Section 6.4.2.

When the NGNP HPS is in full operation, 25% of the total SHTS helium flow will be delivered to the PCHX at 900ºC and 75%, also at 900ºC, will be delivered to a helium-mixing chamber prior to going to the SG. Helium will exit the PCHX at nominally 659ºC and join with the 900ºC helium stream in the mixing chamber. The purpose, of course, is to provide a helium stream of uniform temperature (i.e., without hot streaks) to the SG. This is an added complexity in the system and one that requires additional consideration as to design and testing for performance. First, the mixing chamber itself must be shown to be structurally sound under potentially demanding thermal conditions. Secondly, the performance of the mixing chamber must be shown effective in preventing potentially damaging hot streaks from reaching the SG. These issues will be addressed through DDNs and associated R&D.

There may be times during the life of the NGNP when it will be desirable or necessary to operate the SG with the HPS inactive. A final selection has not been made as to the optimum method for permitting such operation while minimizing risk. One option is to simply flow the SHTS helium through the PCHX in the dry condition. A second option is to provide valves upstream and downstream of the PCHX to prevent feed of the 900ºC helium stream to a "dry" PCHX. Related options are to install a replacement SHTS pipe section that bypasses the PCHX and helium-mixing chamber or to install blind flanges on either side of the PCHX. The latter options may be appropriate if the plant is to be operated without the PCHX for extended periods of time. A future study in Section 6.4.2 has been identified to further address these issues.

6.4.2 Future Studies

Consideration of the complexities, performance issues and risks, summarized above for the HTS and its subsystems and components, leads to the following identified future studies.

6.4.2.1 Cooling and Insulation of HTS Vessels and Piping

This future study will evaluate options for insulation and cooling of pressure boundary components in the high temperature sections of the PHTS and SHTS. Consideration will also be given to alternate pressure boundary materials. Both performance and economics will be considered in arriving at recommendations.

High-temperature ducts are utilized in the PHTS and SHTS pressure boundary to carry helium flow from the Reactor to the IHX (950ºC), from IHX A to IHX B (760ºC on the primary side and 710ºC on the secondary side), from the IHX to the PCHX and SG (900ºC) and from the

PCHX to the mixing chamber (659ºC). These ducts are contained within a pressure boundary of SA-508/SA-533 low-alloy steel that is designed to ASME Section III requirements. One of the most important of these requirements is that the pressure boundary pipe be maintained at a temperature not greater than 371ºC. The current design for the highest temperature portion of the NGNP PHTS piping (from the Reactor to IHX A and from IHX A to IHX B) is similar to that for the PBMR-DPP in that it employs active cooling in the annulus between the pressure boundary pipe and the internal high-temperature ducting and a layer of insulation between the hot duct liner and flow pipe. However, the available cooling flow in the PBMR DPP is ~120ºC versus 350ºC for the NGNP and a layer of insulation internal to the surface of the pressure boundary piping may be necessary to assure that the pressure boundary wall stays below 371ºC under all conditions. This would have the added benefit of reducing energy loss.

All other duct/pressure boundary pipes are currently based on a simple pipe design with either internal or external insulation. These sections include the PHTS return from IHX B to the reactor (350ºC), the SHTS piping from the IHX to the PCHX and SG (900ºC), the SHTS piping section from the PCHX to the mixing chamber (659ºC to 900ºC), the SHTS return from the SG to the IHX (287ºC) and the secondary flow connection between IHX B and IHX A (710ºC). In all of these cases, the type and degree of insulation and its container need to be evaluated. Further, it is worth considering the possibility of employing advanced insulation concepts and/or a pressure boundary material of higher temperature capability than SA-508/533B. Materials such as 316 SS, Alloy 800H, and T-91 Cr-Mo steel have this capability and are accepted under ASME Section III. Could the use of these materials simplify design and, in the extreme, eliminate the need for all active cooling?

SA-508/SA-533 material has also been tentatively selected for the PHTS IHX vessels. These vessels are part of the PHTS pressure boundary and keeping the IHX A vessel shell at 371ºC and lower will also require active cooling (350ºC return from the circulator outlet). Insulation internal to the vessel will also likely be needed to provide conservatism on temperature and to limit heat loss. The IHX B vessel, which sees the 350ºC return temperature can be passively insulated.

Use of the higher temperature materials mentioned earlier is also a possibility for the IHX A vessel; material cost would be increased but perhaps the resulting design simplification might yield an overall less expensive design.

6.4.2.2 Design Basis for IHX Heat Transfer Surface

This future study will address the appropriate design basis and regulatory treatment of the heat transfer surface of the IHX. As noted earlier, the IHX heat transfer service is unique in that it has no direct communication with the environment. Instead it interfaces with the SHTS working fluid, which is contained within the SHTS pressure boundary. In the event of a failure of the heat transfer surface, a second, coincident failure of the SHTS pressure boundary would be required before an environmental release is possible.

A fundamental element of this study will be the systematic evaluation of the functions and requirements related to radionuclide containment that are assigned to the IHX heat transfer surface, to the SHTS and to the heat transfer surfaces of the PCHX and steam generator. This systematic evaluation will be supported by and guided by probabilistic techniques for evaluating the frequency and consequences of radionuclide releases along the various potential pathways.

The potential functions and requirements of secondary isolation valves (both related to maintenance and radionuclide containment) will also be assessed. The influence of secondary isolation valves in avoiding or mitigating radionuclide releases will be addressed for comparison with the reference design without isolation valves. Based on the results, recommendations will be made regarding the appropriate design and regulatory treatment of the IHX heat transfer surface and the technical, economic, and regulatory trade-offs associated with secondary isolation valves.

6.4.2.3 Independent HPS/PCS Operation

The SHTS normally delivers 25% of its flow at 900ºC to the HPS through the PCHX when the HPS is in operation. The remainder of the SHTS flow is delivered to the PCS SG after being mixed with the 659ºC exit flow from the PCHX. A fixed orifice is presently incorporated to establish this distribution of flows. However, there may be conditions under which the HPS is unavailable while power generation is still desired. With the present design, the PCHX must still accept 25% of the total flow at 900ºC and its secondary side will likely be dry when the HPS is shut down. It is not clear that this is acceptable for extended periods.

This study, which is to be jointly conducted with the HPS, will evaluate alternatives for independent HPS/PSC operation. Options to be considered are the reference design and additional options that provide for isolation of the PCHX from the SHTS flow. One such option would be the use of valves to isolate the PCHX from the SHTS flow when the HPS is shut down. Incorporation of valves also offers the potential to regulate flow to the PCHX versus the SG. Another option is to provide a flanged, replaceable pipe section that would bypass the PCHX and, perhaps, the mixing chamber. The latter option would require shutdown of the plant to implement.

6.4.2.4 Confirm Temperature Split between IHX A and IHX B

Two IHX units were selected to transfer heat from the PHTS to the SHTS because it was not certain whether any existing metallic alloy could survive the desired 60-year life at 950ºC. The plan was that the higher-temperature IHX (IHX A) unit could be designed to be replaceable at a minimum [10]-year interval. In the design suggested by the HTS special study, both units would utilize Alloy 617 as the heat exchanger material. On this basis, 850ºC was assumed to be a reasonable temperature split (i.e., the exit temperature of IHX A and the entrance temperature of IHX B), and a temperature at which the Alloy 617 was assumed able to survive for a 60-year life. This assumption is presently unsubstantiated and needs verification. However, further reducing this temperature to about 760ºC would allow the use of Alloy 800H within the

parameters of ASME Section III, Subsection NH. This alloy has had extensive service experience in gas-cooled reactors. Further, it is a material commonly used in compact heat exchangers such as are planned for IHX A and IHX B and is available at a lower cost than Alloy 617. At the 760ºC temperature split, IHX A is approximately half the size of IHX B in terms of thermal capacity; at 850ºC its size relative to IHX B would be even less. This is the current status but there are pros and cons to all of the above that will need to be considered in detail in a future study.

6.4.2.5 Confirm Suitability of Alloy 800H for IHX B

The current reference for IHX B has an entrance temperature of 760ºC and an exit of 337ºC. Its design lifetime is 60-years under an essentially pressure balanced (PHTS versus SHTS pressure) condition and the material for the heat exchanger core and internal ducting is Alloy 800H. This alloy is qualified for service to 760ºC as a part of ASME Section III, NH. Also, it has been used in the manufacture of high-temperature compact heat exchangers. Designs specifying lifetimes of 60-years are very rare, if not unique. In this regard, the long-term thermal aging and environmental behavior of Alloy 800H, as with any material selected, must be carefully examined with regard to the lifetime desired. Consideration could also be given to another high-temperature alloy contained in ASME Section III, Subsection NH (e.g., 316L Stainless S) and qualified to an even higher temperature, 816ºC. These two materials will be compared to each other and to Alloy 617 in terms of performance, economics, and technology readiness in a future study.

6.4.2.6 Helium Mixing Performance and Reliability

As described in Section 6.4.1, the current NGNP reference design includes a helium-mixing chamber that accepts flow at 900ºC (75% of total) from PHTS IHX A and at 659ºC (25% of total) from the PCHX exit. The purpose of the mixing chamber is to take these two helium streams and to meld them into a uniform temperature helium stream for the SG. In particular, the mixing chamber will be designed to minimize hot streaks in the helium going to the SG. A study is needed to confirm that the inclusion of a helium-mixing chamber is actually necessary, beneficial, and cost-effective for operation of the SG. This study may include the testing of prototype mixing chambers.

6.4.2.7 Tritium Transport

At the operating temperatures of the NGNP, the transport of tritium through intact metallic heat exchangers will be enhanced. Whether this is a major or minor concern has yet to be determined and will depend on a number of technical factors, such as the materials selected for the IHX and PCHX, the diffusion coefficients associated with tritium transport through the selected materials, the chemistry of the PHTS and SHTS helium and the effectiveness of the PHTS and SHTS helium service systems in removing tritium. A further issue relates to establishing the appropriate limits on tritium transport to the product hydrogen and/or steam, which, presumably would further depend on their intended use. This future study will consider these technical and regulatory issues as input to Conceptual Design.

REFERENCES

[6-1] *NGNP and Hydrogen Production Preconceptual Design Report*, NGNP-01-RPT-001, Special Study 20.3 – High Temperature Process Heat Transfer and Transport, January 2007.

[6-2] *Specialists' Meeting on Heat Exchanging Components of Gas-Cooled Reactors*, IWGGCR—9, Duesseldorf (Germany), International Working Group on Gas-Cooled Reactors, International Atomic Energy Agency, Vienna (Austria), 16-19 Apr 1984.

[6-3] Tachibana, *Development and Procurement of Hastelloy XR for the HTTR*, Paper presented at Gen IV VHTR Materials and Components Project Management Board, Paris, September 2005.

[6-4] *Nuclear Hydrogen Initiative Ten-Year Program Plan*, Office of Advanced Nuclear Research, DOE Office of Nuclear Energy, Science and Technology, March 2005.

[6-5] Dewson, S.J. and Thonon, B., *The Development of High Efficiency Heat Exchangers for Helium Gas Cooled Reactors*, Paper 3213, ICAPP 03, 2003.

[6-6] Niemeyer, W., *Heat-Exchanging Components for Coal Gasification: He/He Intermediate Heat Exchanger (IHX) and Steam Reformer (SR) in the Primary Circuit*, International Working Group on High-Temperature Reactors, Specialists' Meeting on Process Heat Applications Technology (IWGHTR-6), Juelich, Germany, IAEA, Vienna, Austria, pp: 71-77.

[6-7] *Heat Transport System Design Description, Modular HTGR Plant*, DOE-HTGR-86-020, Rev. 3, General Atomics, San Diego, CA, July 1987.

[6-8] Natesan, K., Moisseytsev, A., Majumdar, S. and Shankar P. S., *Preliminary Issues Associated with the Next Generation Nuclear Plant Intermediate Heat Exchanger Design*, ANL/EXT-06-46 (draft), Argonne National Laboratory, Argonne, IL, September 2006.

[6-9] Ren, W. and Swindeman, R. W., *Assessment of Existing Alloy 617 Data for GEN IV Materials Handbook*, ORNL/TM-2005/510, Oak Ridge National Laboratory, Oak Ridge, TN, June 30, 2005.

LIST OF ASSUMPTIONS

6.1 Compact heat exchangers can be manufactured from high temperature alloys and associated manufacturing processes will not degrade materials properties to an unacceptable level.

6.2 An acceptable metallic alloy can be procured and qualified for the range of 900-950ºC with properties that are acceptable for plate-type heat exchangers (e.g., grain size, as-bonded characteristics).

6.3 Relevant ASME Code Cases can be developed for the NGNP-specific design and materials in a timeframe consistent with the NGNP schedule.

6.4 A metallic IHX with adequate life can be developed for the temperature range of 900-950ºC.

6.5 Circulators of the sizes required for the HTS can be procured without additional development.

APPENDICES

APPENDIX 6A FINAL DESIGN REVIEW PRESENTATION TO BEA

Section 6
Heat Transport System

Section 8
Power Conversion System

Scott R. Penfield, Jr., PE

Preconceptual Design Report
90% Design Review

May 8-10, 2007

P B M R

Westinghouse NGNP Team

P B M R

Outline

- Special Study 20.4 – NGNP Power Conversion System
  - Recommended Cycles
  - Characteristics Influencing PCS Integration
- Special Study 20.3 - High Temperature Process Heat Transfer and Transport
  - Key Inputs
    - Application Technical Requirements
    - NGNP Demonstration Objectives
    - Results of Related Special Studies
  - HTS Trade Studies and Assessments
    - Secondary HTS Working Fluid
    - IHX Design Options
    - IHX Readiness Assessment
  - HTS Options and Recommended Configuration
- HTS Preconceptual Design
  - Design Overview
  - Technical Risks and Design Data Needs
  - Future Studies
- PCS Preconceptual Design
  - Design Overview
  - Technical Risks and Design Data Needs
  - Future Studies
- Summary and Conclusions

Power Conversion System Special Study Recommended Cycles

- **Cycle B chosen as reference Brayton Cycle PCS**
  - Best efficiency
  - Builds upon PBMR DPP Design
- **Cycle J chosen as reference Gas Turbine Combined Cycle (GTCC) PCS**
  - Builds upon PBMR DPP Design
- **Conventional Rankine Cycle chosen for reference Rankine Cycle PCS**

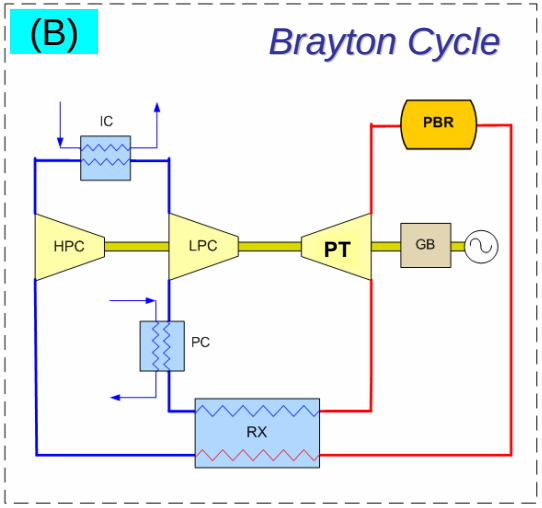

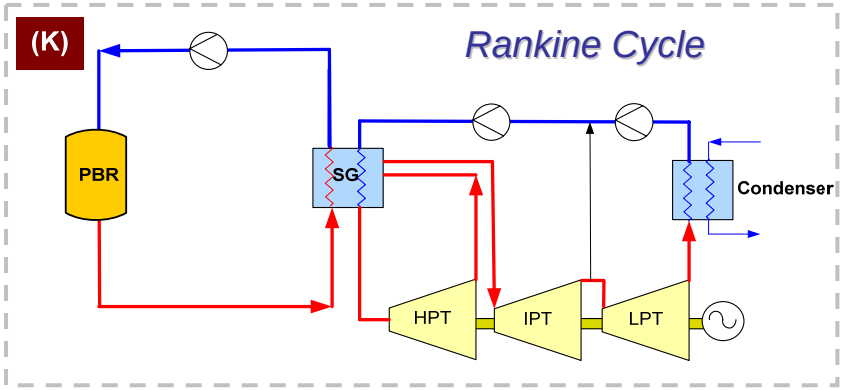

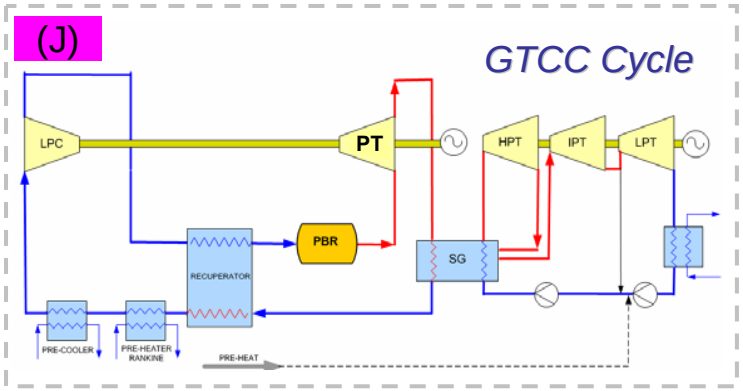

Characteristics Influencing PCS Integration
Direct and Indirect Cycles

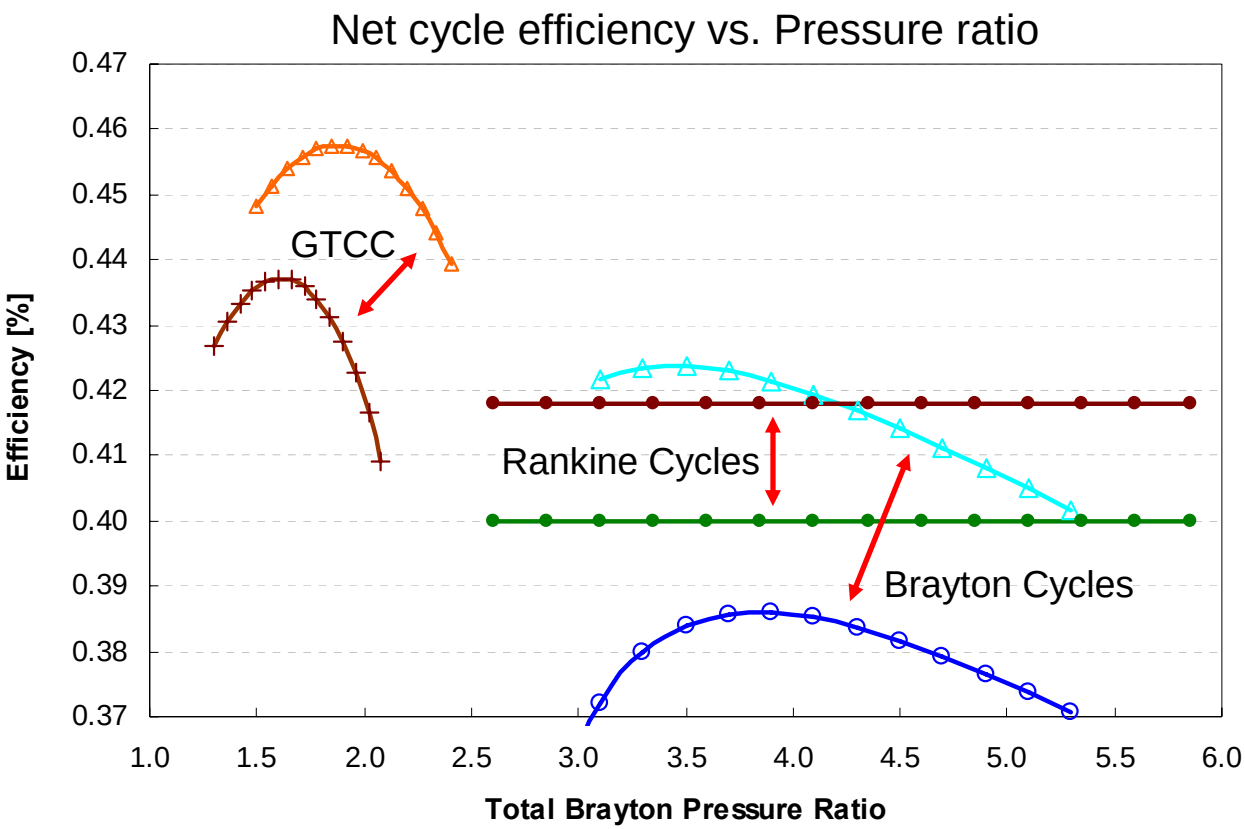

- Indirect Cycles reduce net cycle efficiency by:
  - Brayton Cycle ~4%
  - GTCC ~2%
  - Rankine Cycle ~2%

Characteristics Influencing PCS Integration
Brayton Series vs. Parallel

- Effect of H2 plant size and configuration on Direct Brayton Cycle (B) thermal efficiency
  - Note: parallel blower house load not included; parallel mixing not included

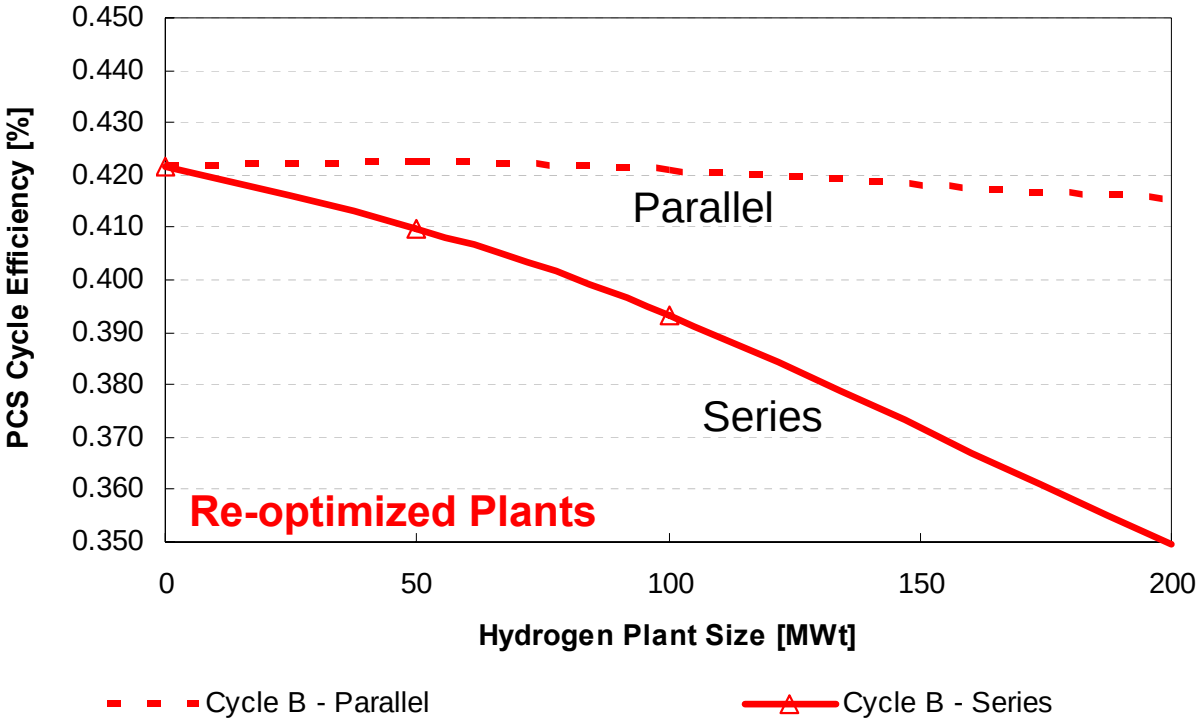

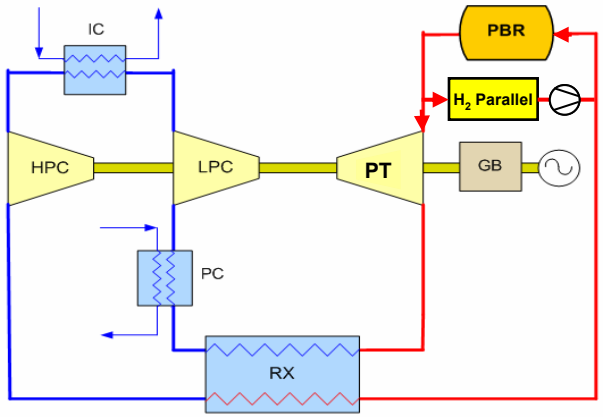

Parallel Coupling

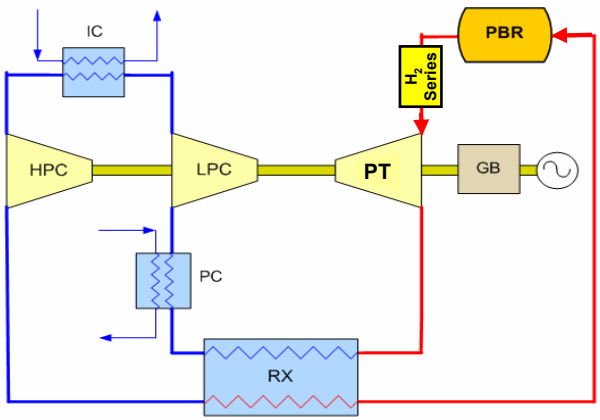

Series Coupling

Characteristics Influencing PCS Integration
Influence of Hydrogen plant size

- Effect of H_2 plant size coupled in series on the thermal efficiency of a Direct Brayton Cycle (B) vs. Rankine Cycle (K)
  - Rankine cycle efficiency > Brayton cycle efficiency for hydrogen plant >100 MWt

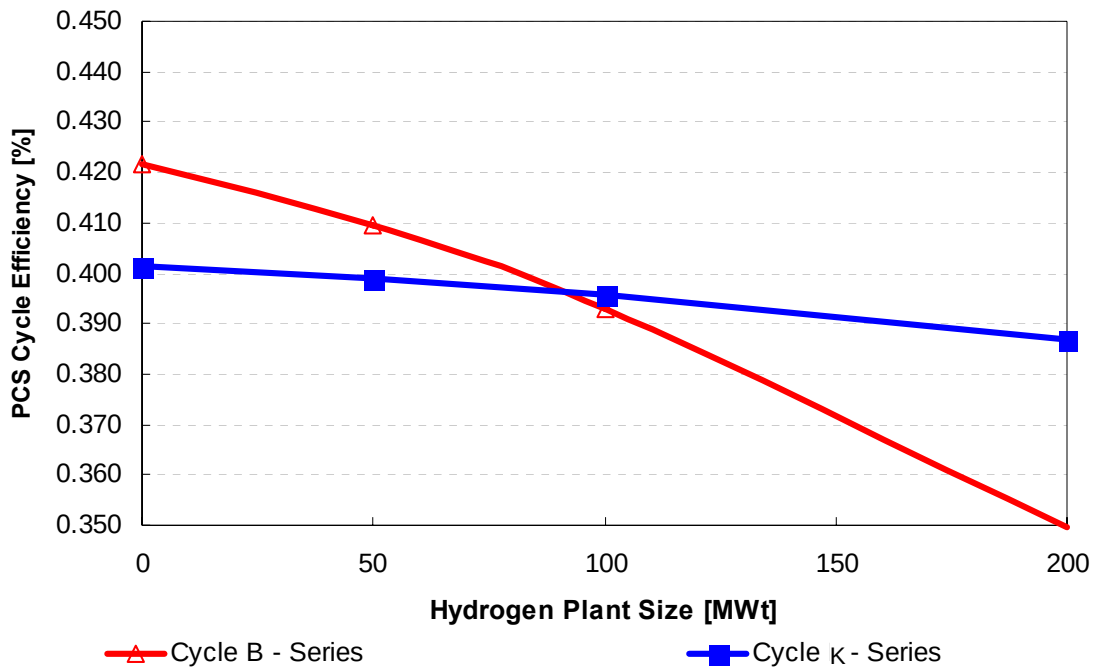

Characteristics Influencing PCS Integration
Summary and Conclusions

- Net cycle efficiency reduced with indirect coupling
  - Brayton cycle more affected (sensitivity to turbine inlet temperature)
- Efficiency of series coupled bottoming Brayton Cycle decreases significantly with increased H_2 plant size
- Rankine cycle less sensitive to H_2 plant size

P B M R

Outline

- Special Study 20.4 – NGNP Power Conversion System
  - Recommended Cycles
  - Characteristics Influencing PCS Integration
- Special Study 20.3 - High Temperature Process Heat Transfer and Transport
  - Key Inputs
    - Application Technical Requirements
    - NGNP Demonstration Objectives
    - Results of Related Special Studies
  - HTS Trade Studies and Assessments
    - Secondary HTS Working Fluid
    - IHX Design Options
    - IHX Readiness Assessment
  - HTS Options and Recommended Configuration
- HTS Preconceptual Design
  - Design Overview
  - Technical Risks and Design Data Needs
  - Future Studies
- PCS Preconceptual Design
  - Design Overview
  - Technical Risks and Design Data Needs
  - Future Studies
- Summary and Conclusions

P B M R

Key Inputs
Application Technical Requirements

Application	HyS	S-I*	HTSE*
Reactor/IHX			
Core Outlet Temperature, C	950	950	950
IHX Secondary Outlet Temperature, C	900	925	917
Fraction of Energy via IHX, %	100	100	10
High Temp PCHX			
High Temp PCHX	H_2SO_4 Decomposer	H_2SO_4 Vaporizer/ Decomposer	Steam Generator and Superheater
Fraction of Energy via PCHX, %	36	100	~10
Process Pressure, MPa	8.8	7.0	5
Process Side Outlet Temp, ºC	872	900	772** - 827

* Based on recent publicly available references
** Electric heater used for final thermal input to HTSE cathode in one reference.

P B M R

Key Inputs
NGNP Demonstration Objectives

- The principal mission of the NGNP must be to demonstrate and support commercial process heat applications of the HTGR, notably including hydrogen production
- If this mission is to be fulfilled, there are three critical corollary objectives that must be attained:
  - Intermediate Heat Exchanger (IHX)
    - Demonstration of a reliable IHX with acceptable performance and lifetime
  - Hydrogen Production System (HPS)
    - Demonstration of the integration of one or more HPSs with a nuclear heat source
  - Licensing/Design Certification
    - Demonstration of the licensing process for process heat applications, specifically hydrogen production
    - In all likelihood, a prerequisite for private sector investment in follow-on commercial plants

P B M R

Key Inputs
Results of Related Special Studies

- **Special Study 20.2 - Prototype Power Level**
  - Power Level: 500MWt
- **Special Study 20.4 – NGNP Power Conversion System**
  - Power Conversion System Options and Characteristics: Already discussed
- **Special Study 20.7 - NGNP HPS By-Products and Effluents Study**
  - Hydrogen Production System Power: 50MWt
- **Hydrogen Technology Selection Study**
  - Hybrid Sulfur Process

P B M R

Outline

- Special Study 20.4 – NGNP Power Conversion System
  - Recommended Cycles
  - Characteristics Influencing PCS Integration
- Special Study 20.3 - High Temperature Process Heat Transfer and Transport
  - Key Inputs
    - Application Technical Requirements
    - NGNP Demonstration Objectives
    - Results of Related Special Studies
  - HTS Trade Studies and Assessments
    - Secondary HTS Working Fluid
    - IHX Design Options
    - IHX Readiness Assessment
  - HTS Options and Recommended Configuration
- HTS Preconceptual Design
  - Design Overview
  - Technical Risks and Design Data Needs
  - Future Studies
- PCS Preconceptual Design
  - Design Overview
  - Technical Risks and Design Data Needs
  - Future Studies
- Summary and Conclusions

P B M R

Secondary Heat Transfer Fluid
Comparison of Options

Item	Helium	CO_2	Liquid Salt (LS)
• Design Compatibility	+	-	- -
• Influence on Major Components			
– Heat Exchangers	+	-	+/-
– Circulators/Pumps	-	+	++
– Piping and Insulation	++	+	- -
– Valves and Seals	- -	-	+
• System Integration	+	-	- -
• System Operation	+	-	- -
• Availability and Reliability	+	-	- -
• Safety & Licensing	+/-	-	+/-
• Economic Considerations	+/-	+/-	+
• R&D Cost and Schedule	+	-	- -

Secondary Heat Transfer Fluid
Conclusions and Recommendations

- With relatively low return temperature of commercial PBMR PHP for HyS, incentives for CO_2 vs. helium are likely to be modest, if at all
  - Materials compatibility issues may be significant
- Design and operational issues make LS problematical at current stage of development
  - Incentives increase with greater distance between heat source and process plant
  - Not considered a practical option for SHTS within timeframe of NGNP
- NGNP preconceptual design should be based on helium SHTS with PCHX located as close as possible to the IHX
- Continue development of LS HTS – longer term enhancing technology
  - Tertiary loop on NGNP could be potential basis for future demonstration

P B M R

IHX Design Tradeoffs

Metric	Shell & Tube	Plate-Fin & Prime Surface	Printed Circuit Heat Exchanger
Compactness (m^2/m^3 & MW/m^3)	Poor	Best	Good
Cost (t/MWt)	Poor: (**13.5 tons/MWt**)* Unlikely to be commercially viable	Best: **Most compact, least materials**	Good: (**0.2 tons/MWt**)* Estimated to be ~1/68 that of S&T
Experience Base	**HTTR**, German PNP Development	Conventional GT recuperators	**PBMR DPP Recuperator**, other commercial products
Robustness	Best: Simple cylindrical geometry, stress minimized in HT area	Worst: Thin foils; stressed welds in pressure boundary; stress risers in pressure boundary welds; **Small material and weld defects more significant**	Good: Thicker plates; local debonding does not immediately affect pressure boundary; potential for higher transient thermal stresses vs. P-F
Inspection and Maintenance	Design facilitates inspection and plugging of individual tubes	Inspection and maintenance difficult or impractical below module level	Inspection and maintenance difficult or impractical below module level
HX Integration	Headers and HX-vessel integration demonstrated	More difficult HX integration with multiple series/parallel modules	More difficult HX integration with multiple series/parallel modules
Code Basis for Design	Existing Sect VIII Code basis for tubular geometries	No existing Code basis	No existing Code basis

* Reference 5

P B M R

Recommended IHX Technology
Printed Circuit Heat Exchanger (PCHE)

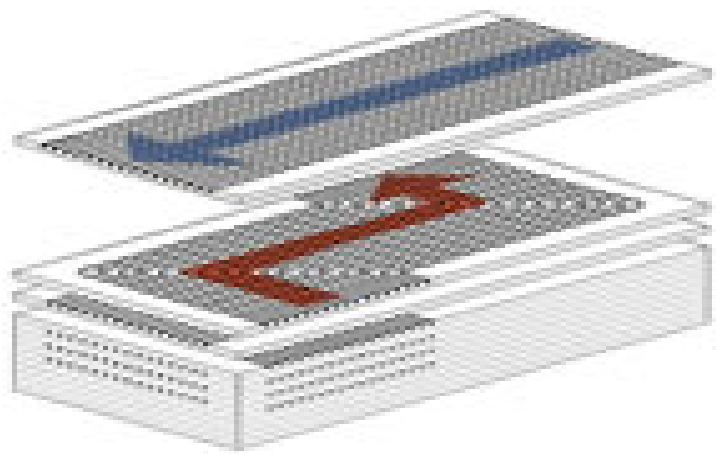

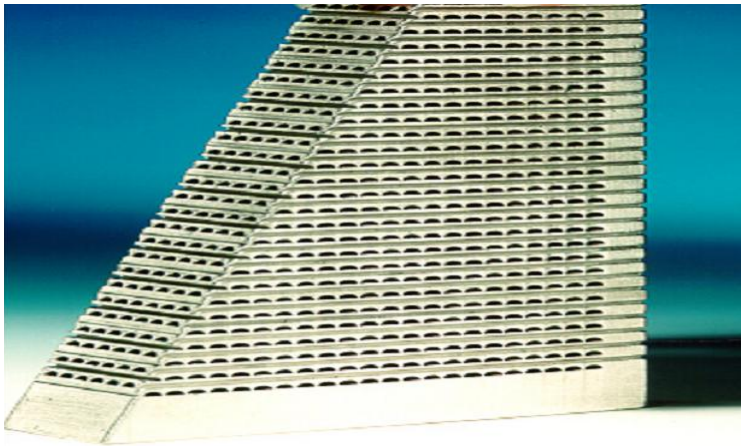

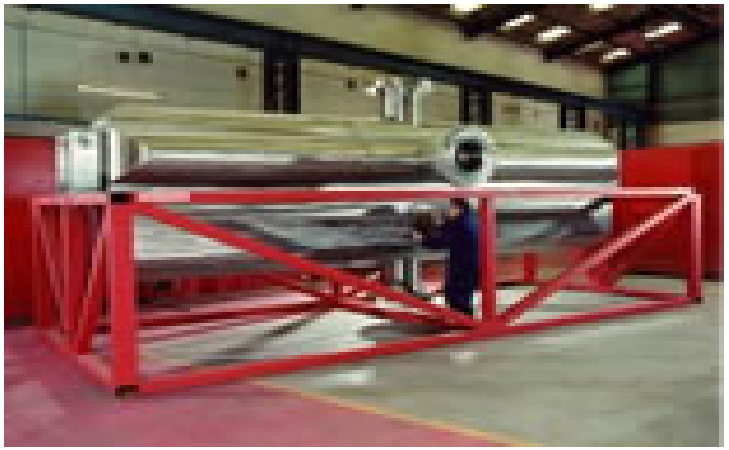

(Source: Heatric)

P B M R

IHX Readiness Assessment
Metallic Materials

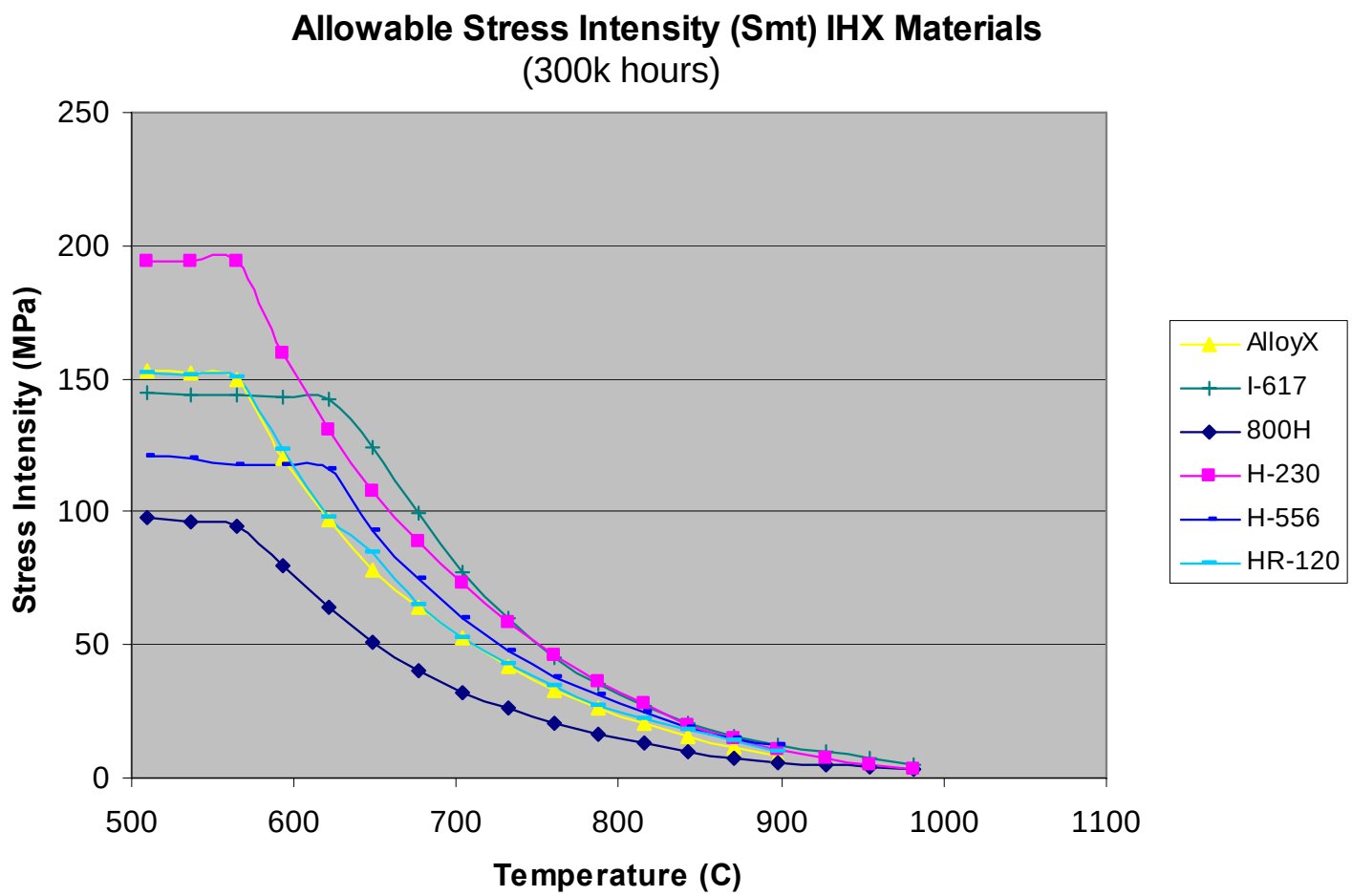

P B M R

IHX Readiness Assessment
IHX Materials

- Existing metallic materials can be applied in temperature regime of NGNP IHX, albeit with significant limitations:
  - Will require designs based on very low stresses during normal long-term operation
  - Transient-related stresses will be more significant in compact IHXs (needs further evaluation)
  - Likely need to replace IHX core multiple times over 60-year design life of plant
- Present metallic materials are likely not the optimum long-term solution for commercial process heat plants operating in the NGNP temperature range
- Ceramic IHXs are unlikely to be available in a timeframe that would support initial NGNP deployment
  - But, high incentives for ultimate demonstration of a IHX based on ceramics (or other advanced material)
  - Given their importance, ceramic HX development deserves accelerated effort in parallel with metallic options

P B M R

Outline

- Special Study 20.4 – NGNP Power Conversion System
  - Recommended Cycles
  - Characteristics Influencing PCS Integration
- Special Study 20.3 - High Temperature Process Heat Transfer and Transport
  - Key Inputs
    - Application Technical Requirements
    - NGNP Demonstration Objectives
    - Results of Related Special Studies
  - HTS Trade Studies and Assessments
    - Secondary HTS Working Fluid
    - IHX Design Options
    - IHX Readiness Assessment
  - HTS Options and Recommended Configuration
- HTS Preconceptual Design
  - Design Overview
  - Technical Risks and Design Data Needs
  - Future Studies
- PCS Preconceptual Design
  - Design Overview
  - Technical Risks and Design Data Needs
  - Future Studies
- Summary and Conclusions

P B M R

HTS Options
Process Heat/PCS Configuration Hierarchy

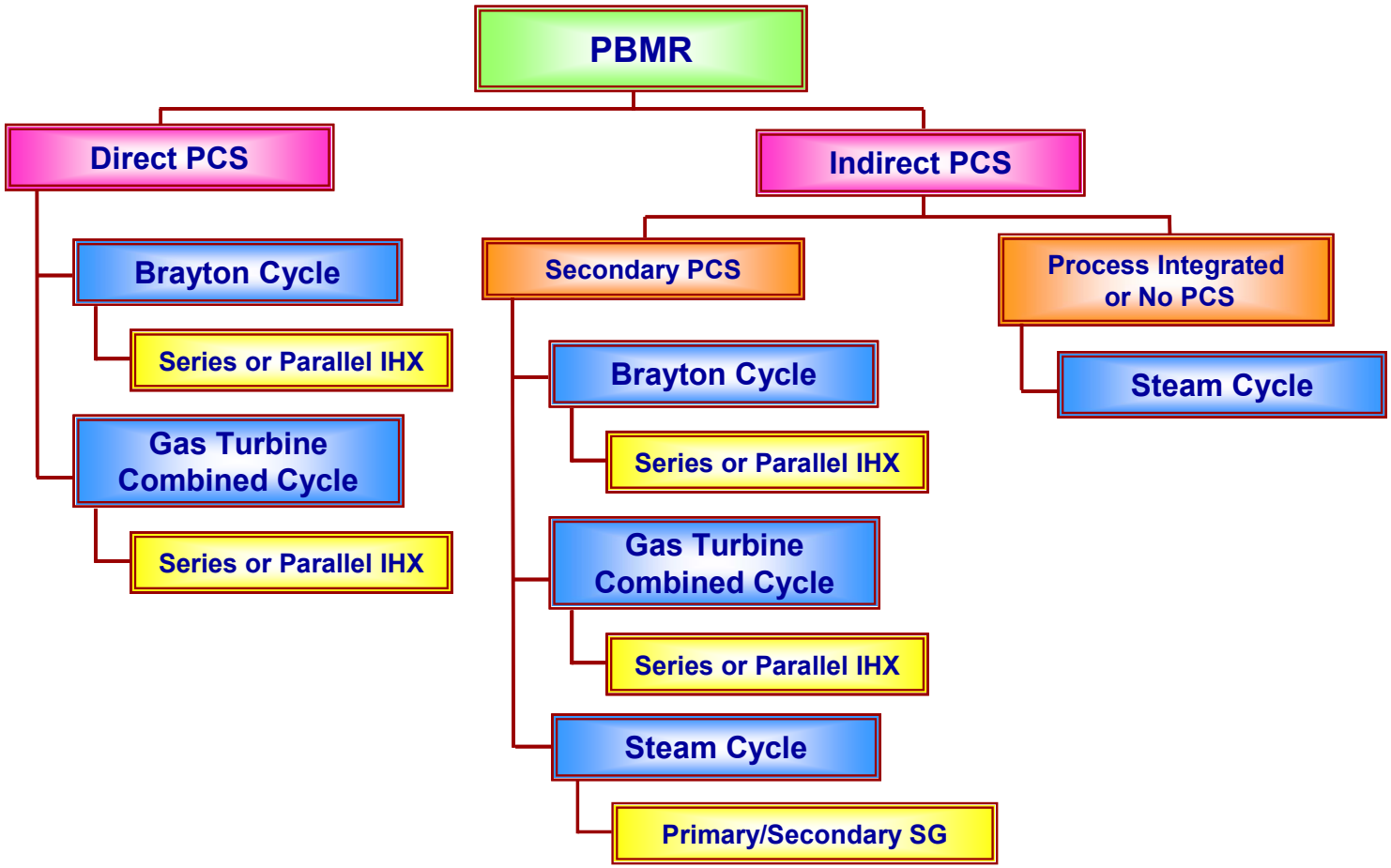

Key Drivers in HTS Configuration Selection

- High-Temperature Thermal Energy Utilization
  - In commercial applications, hydrogen production is maximized when high-temperature thermal energy (>~700ºC) is utilized in the process coupling heat exchanger (PCHX)
  - Implies PCS should be series bottoming cycle vs. parallel to PCHX
- Flexibility of Rankine cycle over range of SHTS temperatures and power levels
  - For commercial plants, allows efficient utilization of lower temperatures
  - For the NGNP Demonstration Plant, allows near-independent PCS operation vs. hydrogen production plant
- Brayton cycle power maneuvering is based on combination of inventory (pressure) control and bypass control
  - Implies high and varying differential pressures across IHX and, in some configurations, the PCHX
  - Not compatible with metallic IHX at temperatures of interest
- Helium Return Temperature
  - Present circulator experience base limited to ~400ºC
  - Present reactor pressure vessel material limited to 370ºC
- IHX
  - Materials limitations, which have been previously discussed

Commercial PBMR H2 PHP Design

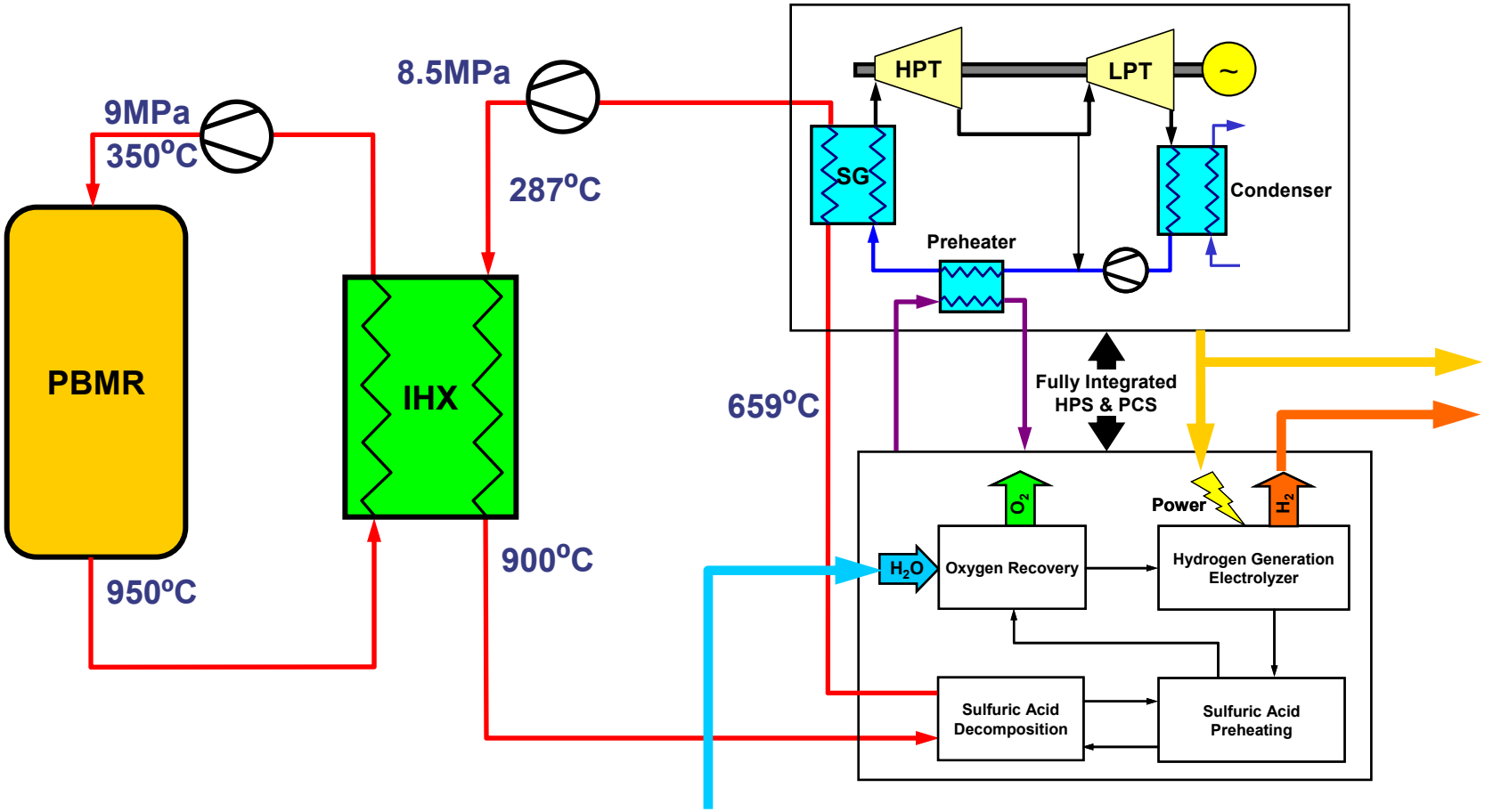

Recommended NGNP Configuration
HTS Coupling to HPS and PCS

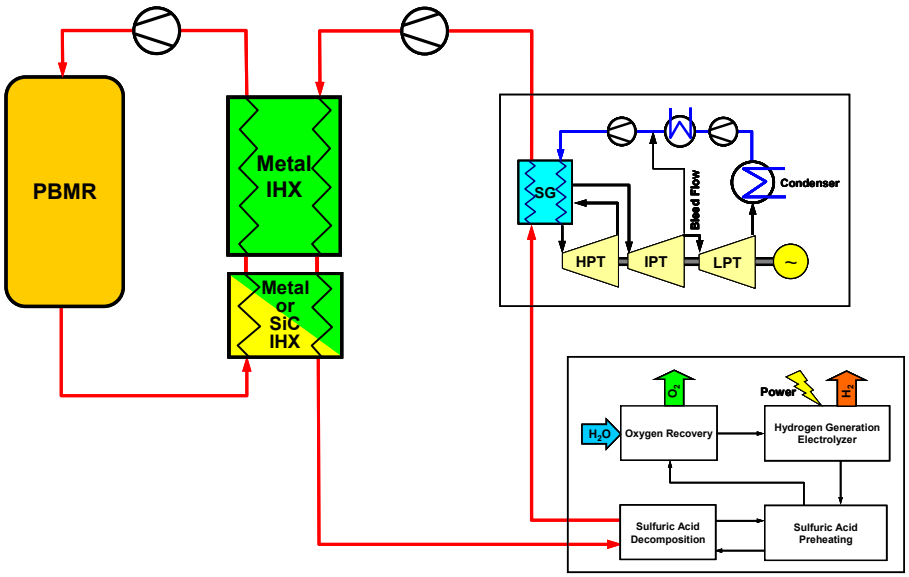

Option 6: Secondary Steam Cycle, Series PCHX

- **Full-size IHX**
  - **Best represents commercial applications**
  - **provides optimum basis for design certification of process heat applications**
- **Rankine cycle provides greater flexibility for balancing needs of demonstration loop and PCS**
  - Wide range of energy allocation to PCS (0 – 500MWt)
  - Can accommodate NGNP HPS expansion to commercial size (200MWt to PCHX)
- **Minimizes R&D and risk not directly associated with process heat objectives**
  - Best protects IHX against transient events (temperature, pressure)
  - Reduced SHTS return temperature
- **GT/GTCC commercial applications adequately supported by DPP in South Africa**

Recommended NGNP Configuration 2-Section IHX

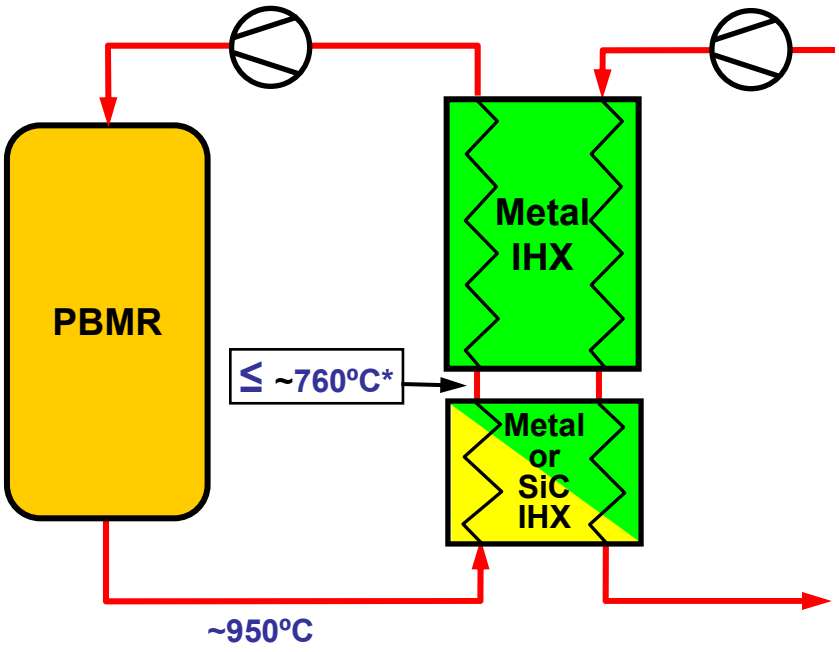

- 2-Section IHX applies ceramic or composite materials in high-temperature section, metal in low-temperature section
  - High-temperature section designed for replaceability
  - Low-temperature section designed for plant life
  - Transition temperature of ≤760ºC allows use of Code qualified Alloy 800H or comparable material
- Potential to start with metal in high-temperature section (short lifetime) and then replace with ceramic/composite when ready
- Potential to operate at ≤ ~760ºC on PCS without high temperature section and then add later

*Note: Transition Temperature in Special Study was ≤~850ºC

P B M R

Outline

- Special Study 20.4 – NGNP Power Conversion System
  - Recommended Cycles
  - Characteristics Influencing PCS Integration
- Special Study 20.3 - High Temperature Process Heat Transfer and Transport
  - Key Inputs
    - Application Technical Requirements
    - NGNP Demonstration Objectives
    - Results of Related Special Studies
  - HTS Trade Studies and Assessments
    - Secondary HTS Working Fluid
    - IHX Design Options
    - IHX Readiness Assessment
  - HTS Options and Recommended Configuration
- HTS Preconceptual Design
  - Design Overview
  - Technical Risks and Design Data Needs
  - Future Studies
- PCS Preconceptual Design
  - Design Overview
  - Technical Risks and Design Data Needs
  - Future Studies
- Summary and Conclusions

HTS Coupling Concept

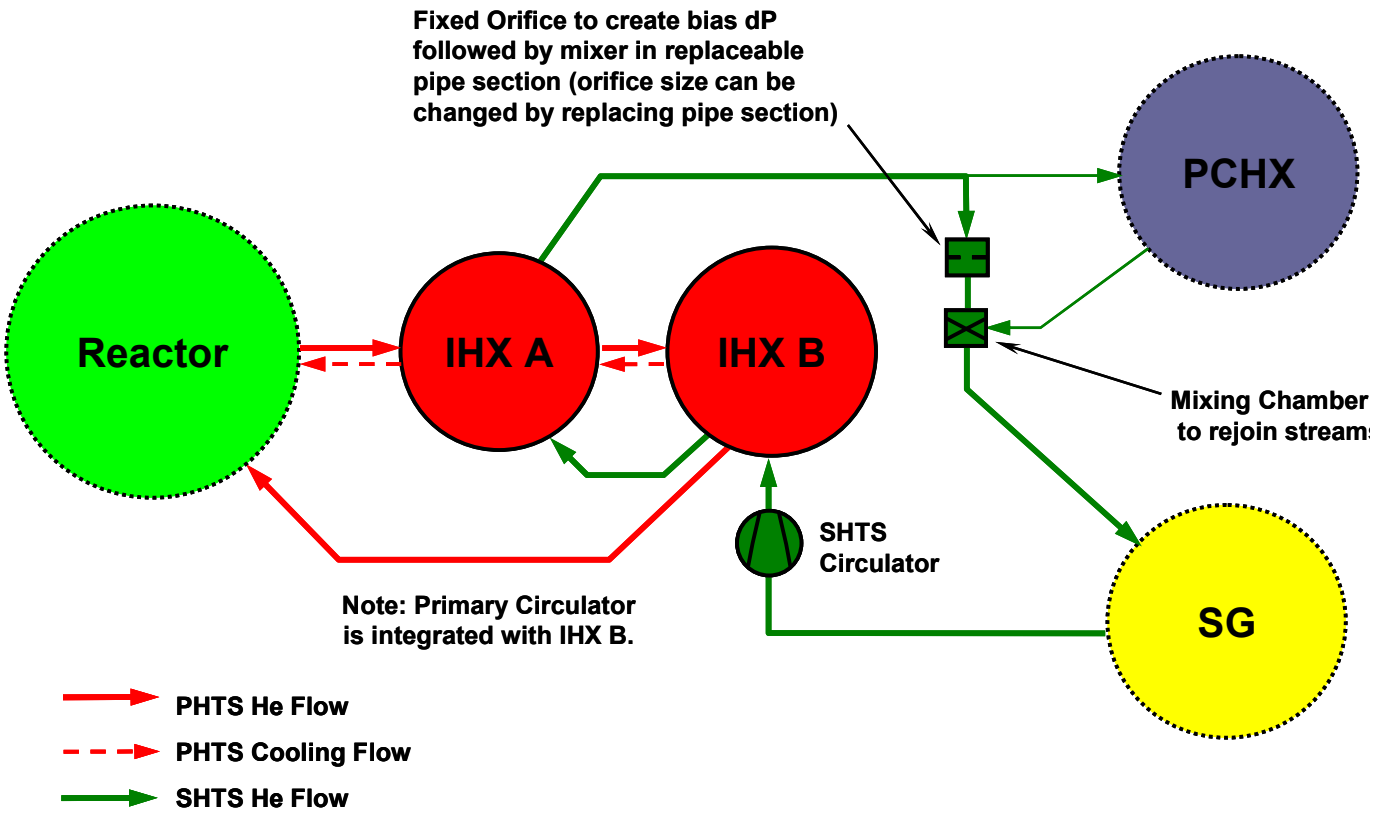

P B M R

HTS Operating Parameters

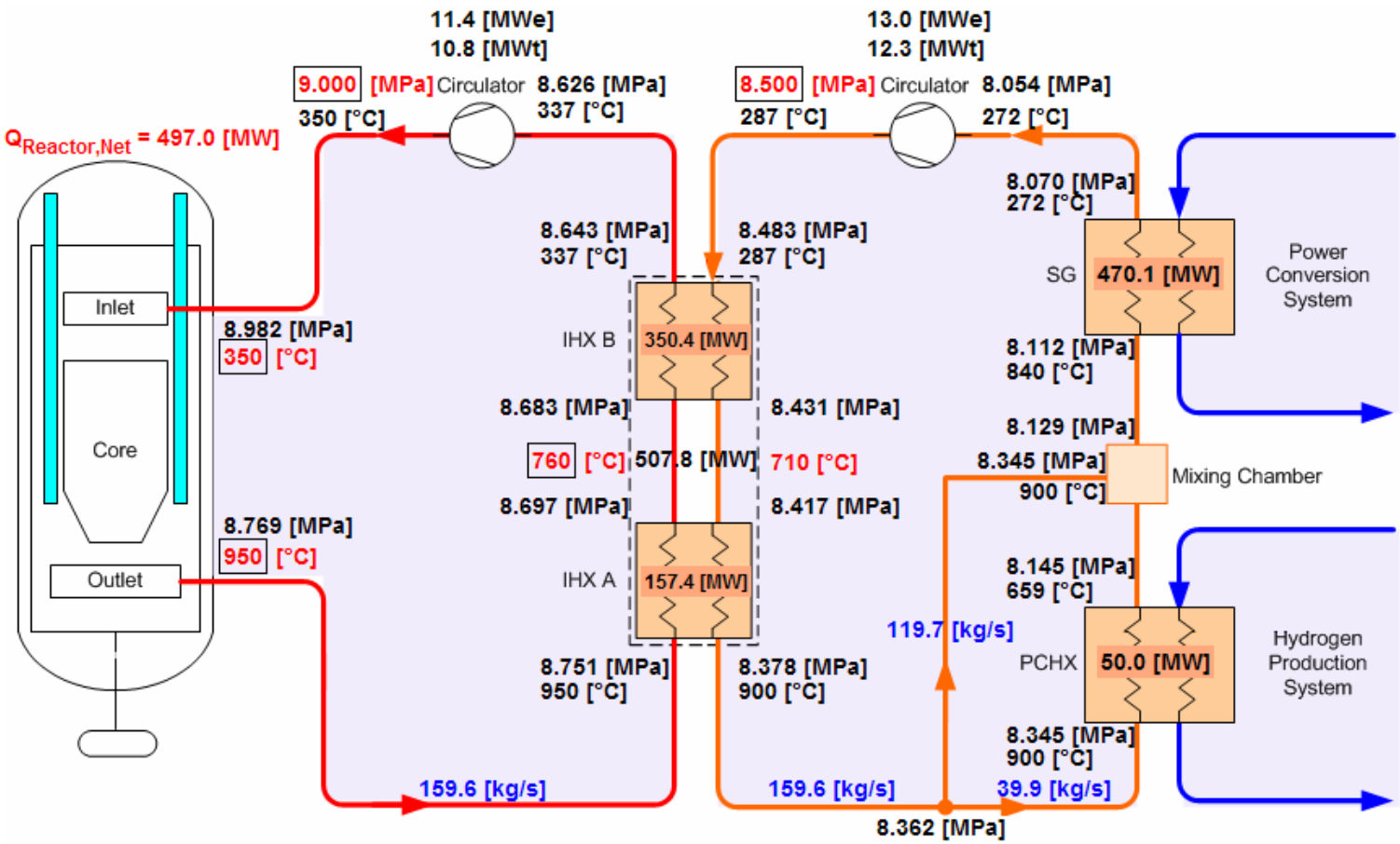

Westinghouse NGNP Team

P B M R

NGNP Layout

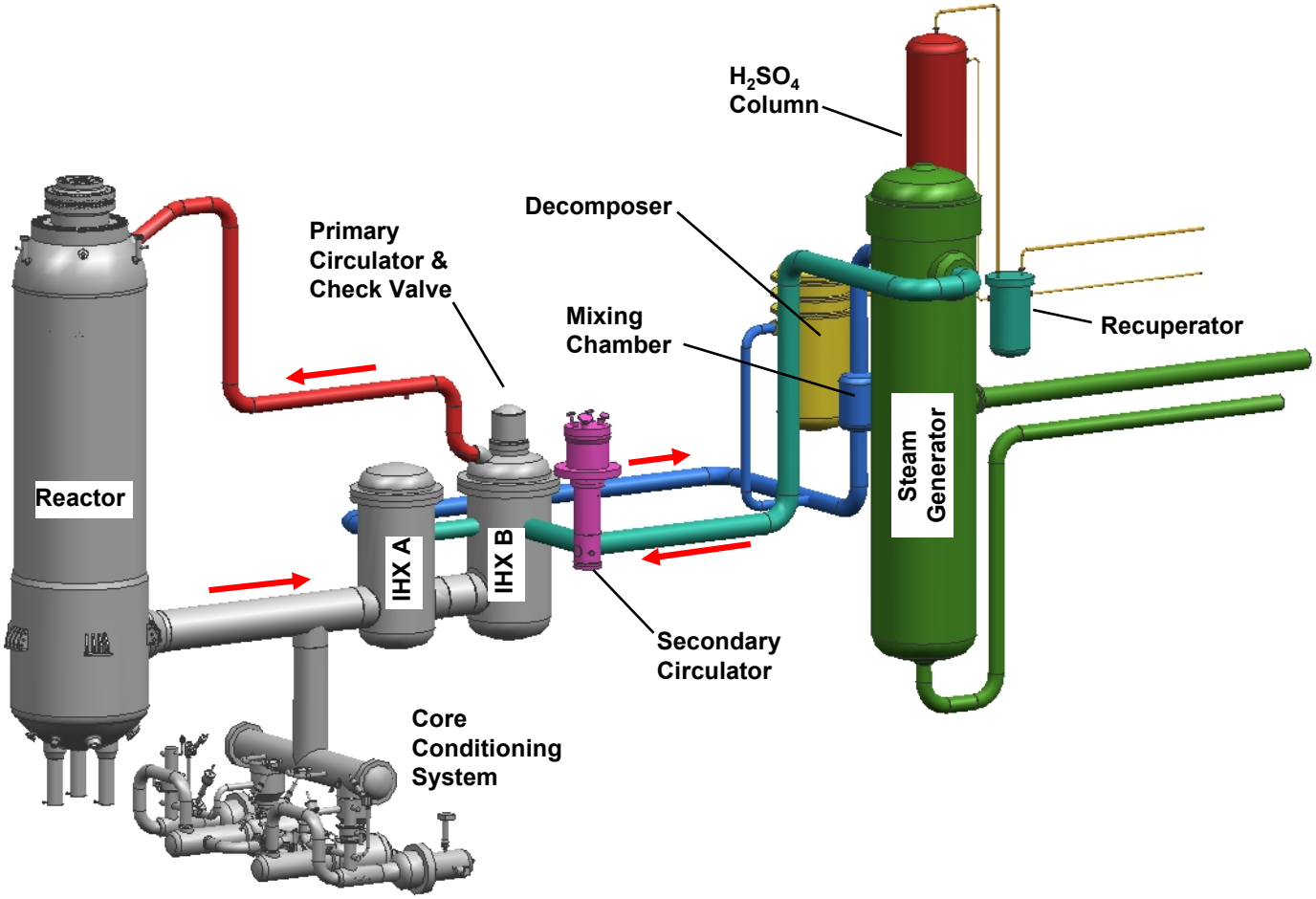

P B M R

IHX Preconceptual Design

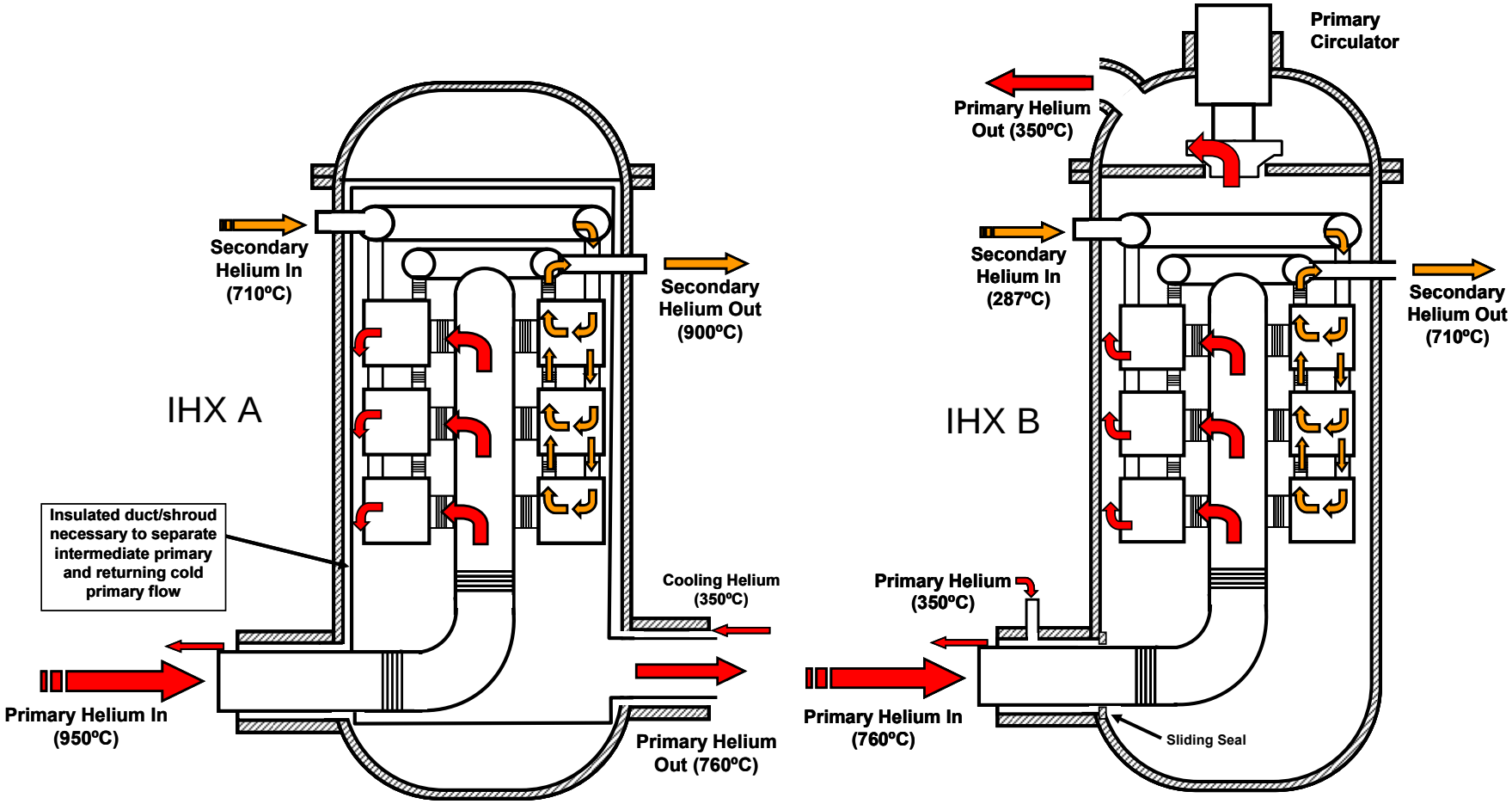

Westinghouse NGNP Team

High-Temperature Primary Piping Concept

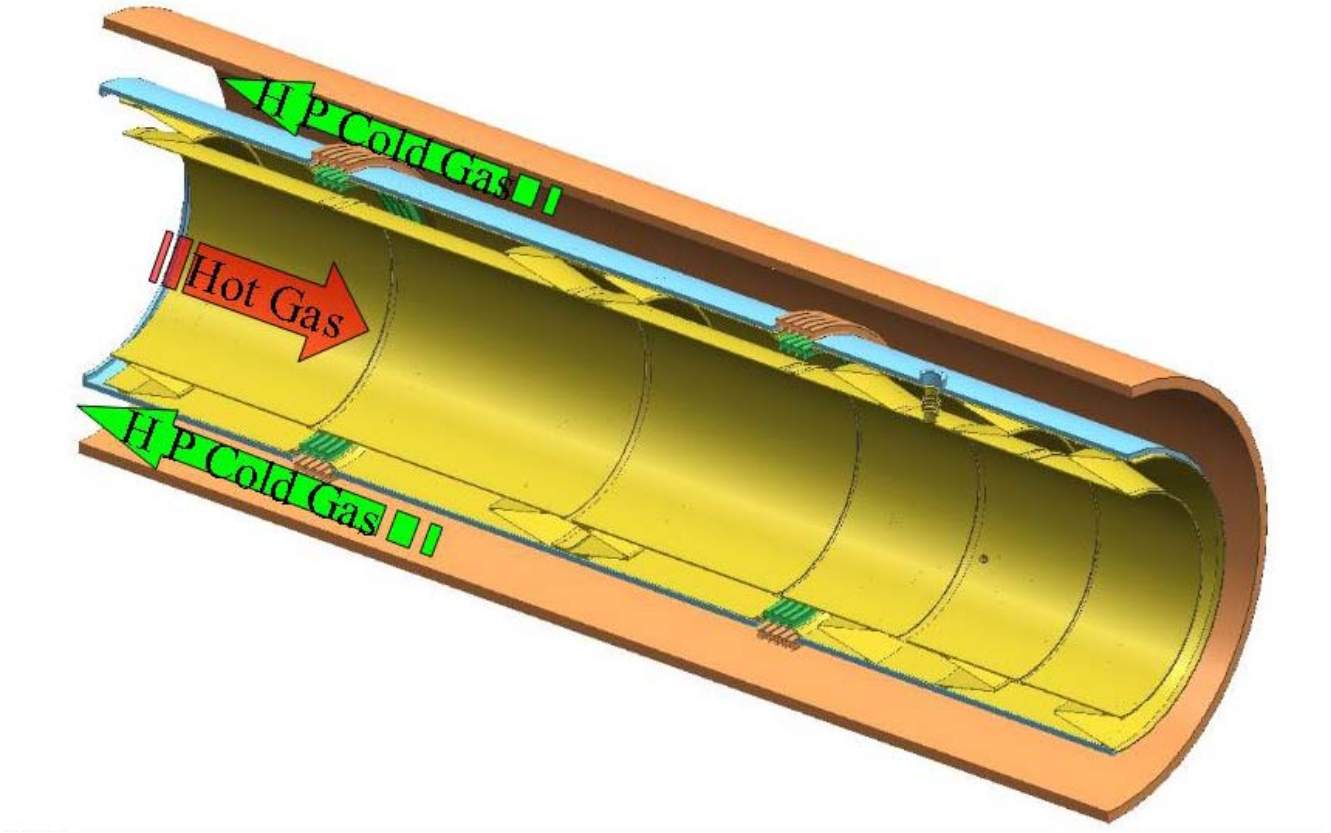

P B M R

HTS Design Data Needs

- Metallic IHX
  - Characterization of I-617 and Alloy 230 leading to selection of material
  - Analytical modeling
  - Criteria for structural adequacy
  - Performance verification
  - Design and materials specific Code Cases for NGNP
- Ceramic IHX
  - Review existing technology as basis for selecting reference material
  - Materials properties database
  - Design methods
  - Performance verification
  - Manufacturing technology
  - Codes and Standards
- High-Temperature Ducts and Insulation
  - Performance verification
- Helium Mixing Chamber (required for NGNP Demo Plant, not commercial plants)
  - Performance verification

P B M R

Future Studies

- Cooling and Insulation of HTS Vessels and Piping
  - Tradeoffs between active cooling and and passive insulation
  - Consideration of alternate pressure boundary materials
- Design Basis for IHX Heat Transfer Surface
  - Assessment of functions and requirements with respect to radionuclide retention
  - Code classification, role in NGNP safety case
- Independent HPS/PCS Operation
  - Means required to isolate PCHX when HPS is not in operation?
- Confirm Temperature Split between IHX A and IHX B
- Confirm Suitability of Alloy 800H for IHX B
- Helium Mixing Chamber Performance and Reliability

P B M R

Outline

- Special Study 20.4 – NGNP Power Conversion System
  - Recommended Cycles
  - Characteristics Influencing PCS Integration
- Special Study 20.3 - High Temperature Process Heat Transfer and Transport
  - Key Inputs
    - Application Technical Requirements
    - NGNP Demonstration Objectives
    - Results of Related Special Studies
  - HTS Trade Studies and Assessments
    - Secondary HTS Working Fluid
    - IHX Design Options
    - IHX Readiness Assessment
  - HTS Options and Recommended Configuration
- HTS Preconceptual Design
  - Design Overview
  - Technical Risks and Design Data Needs
  - Future Studies
- PCS Preconceptual Design
  - Design Overview
  - Technical Risks and Design Data Needs
  - Future Studies
- Summary and Conclusions

PCS Facility Top Level Requirements

- PCS Parameters and Performance
  - At rated hydrogen production:
    - SHTS Helium Temperature - ~840°C
    - Thermal Input - ~470 MWt
  - In full electricity generation mode (no hydrogen production)
    - SHTS Helium Temperature - ~900°C
    - Thermal Input - ~520 MWt (rated NHSS capacity)
  - The PCS cycle efficiency shall be about [36]%.
- PCS Configuration
  - The PCS facility is separated from the NHSS in a manner consistent with commercial plant economic and risk tradeoffs
  - Conventional, Rankine steam-electric plant that is decoupled from the HPS

NGNP Demonstration Plant PCS Heat Balance

Ambient pressure	1.014	bar
Ambient temperature	31.67	C
Ambient RH	60	%
Gross power	204989	kW

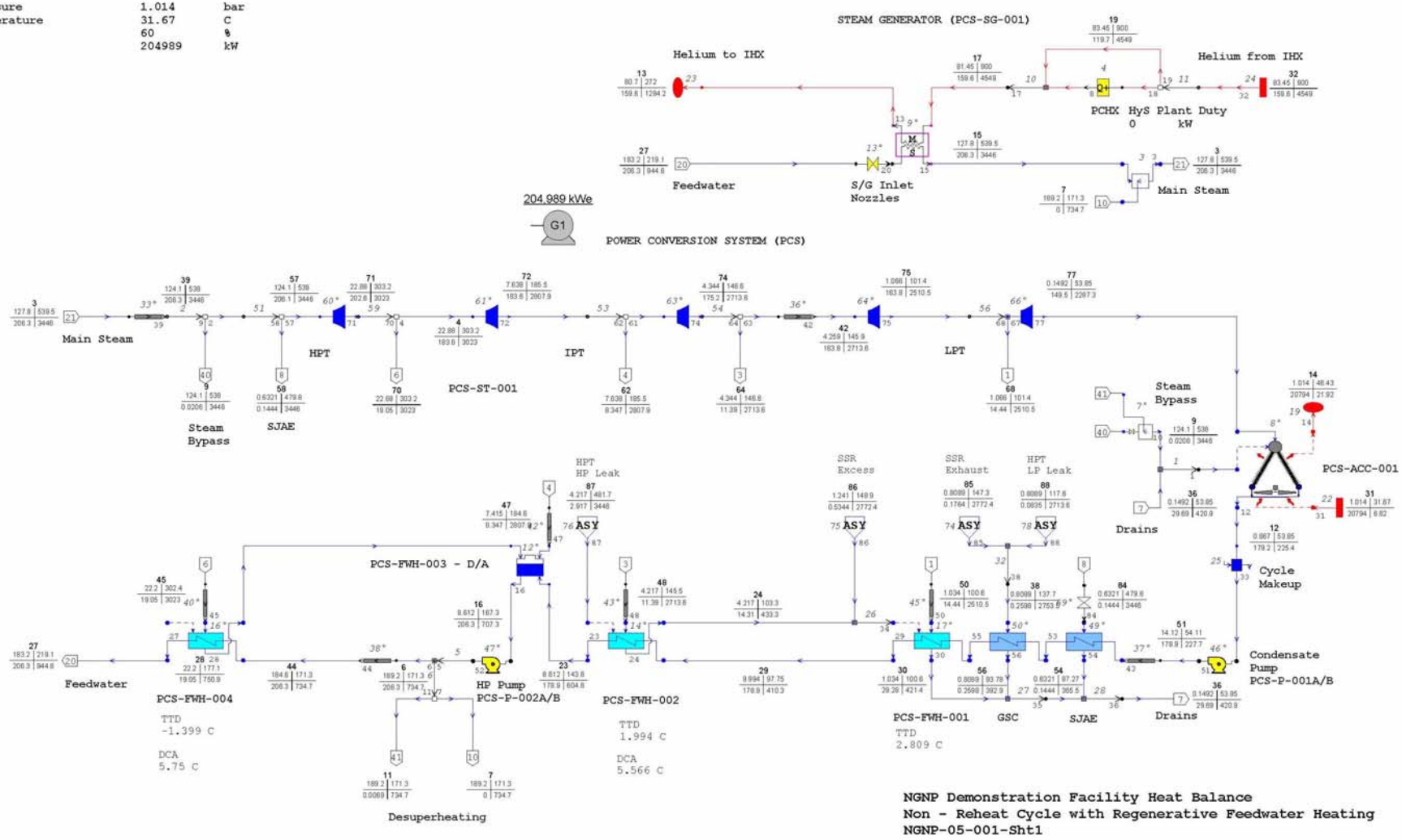

P B M R

NGNP Demo/Commercial Electric Power
Energy Balance with HPS Operating

NGNP Demo	MWe	Commercial (4 Reactors)	MWe	Remarks
PCS Gross output	184	PCS Gross output	595	Based on Heat balances
NHSS/HTS House loads	-27	4 NHSS House	-112	Primary blower included at 11.4 MWe; secondary blower at 13 MWe.
NHSS/HTS BOP loads	-2	4 NHSS/HTS BOP loads	-8	Estimated for BOP systems supporting NHSS
HPS house loads	-15	16 units	-240	Includes electrolyzers and miscellaneous normally operating loads.
HPS BOP house load	-1	16 HPS BOP house load	-16	Estimated for BOP systems supporting HPS
PCS house load	-9.5	PCS house load	-14	Includes condenser fans , Condensate, feedwater pumps
PCS BOP house load	-1	PCS BOP house load	-2	Estimated for BOP systems supporting PCS
BOP common facility House load	-2	Common House load	-6	Estimated for BOP systems supporting Common Buildings
Power available to grid	126.5	Power available to grid	197	Values provided for use in Economic Analysis in PCDR Section 19.

P B M R

PCS Major Components

- Once-Through Helical Steam Generator
- Standard Steam Turbine Generator Set
- Forced Draft Cooled Condenser
- Condensate Pumps
- Condensate Polishers
- Feedwater Heaters
- Feedwater Pumps

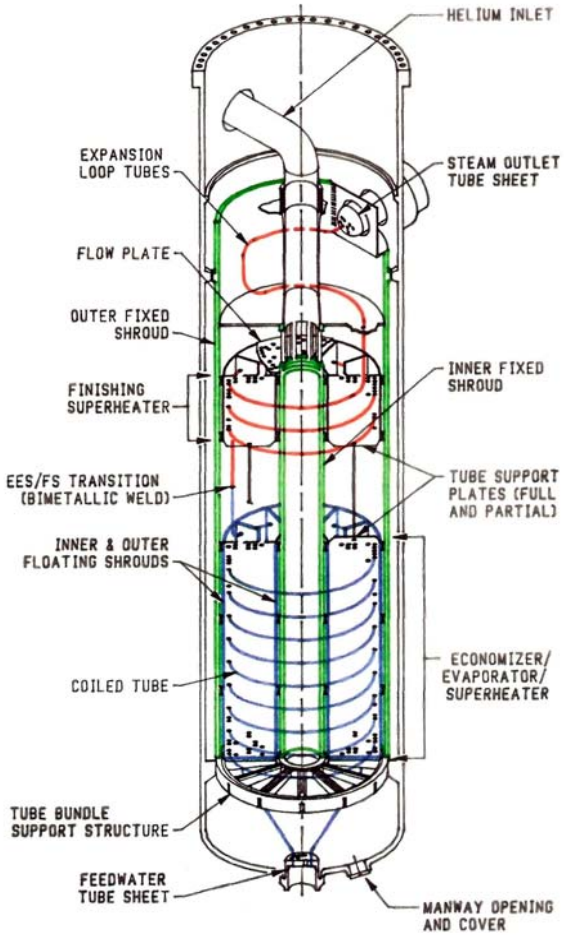

P B M R

Steam Generator Building

- Helical Steam Generator
  - ASME VIII Vessel
  - Freestanding Supports
  - Internally Insulated Piping

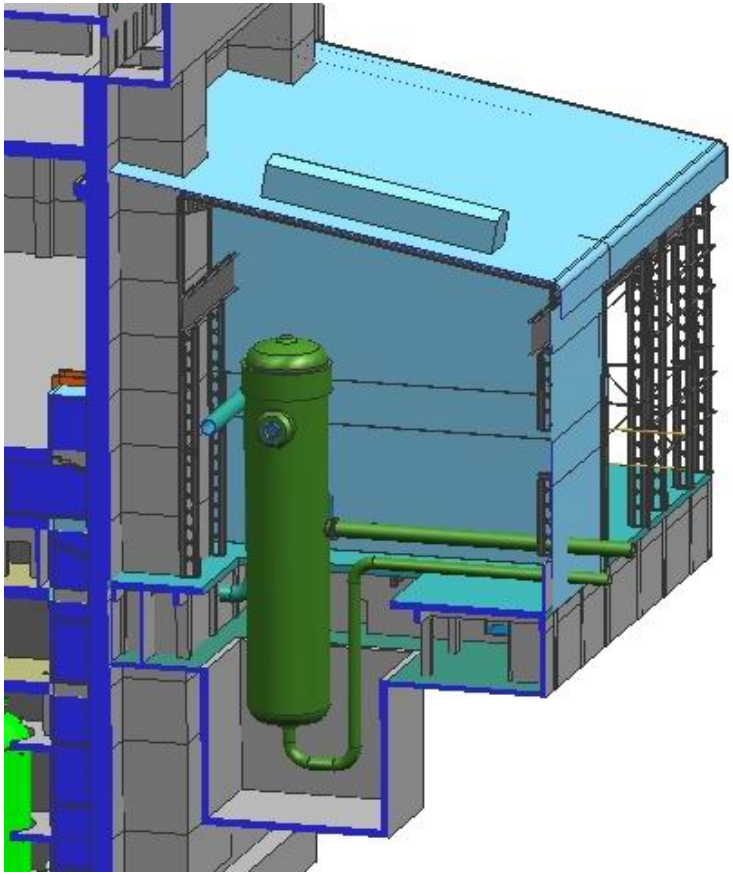

P B M R

NGNP PCS Arrangement

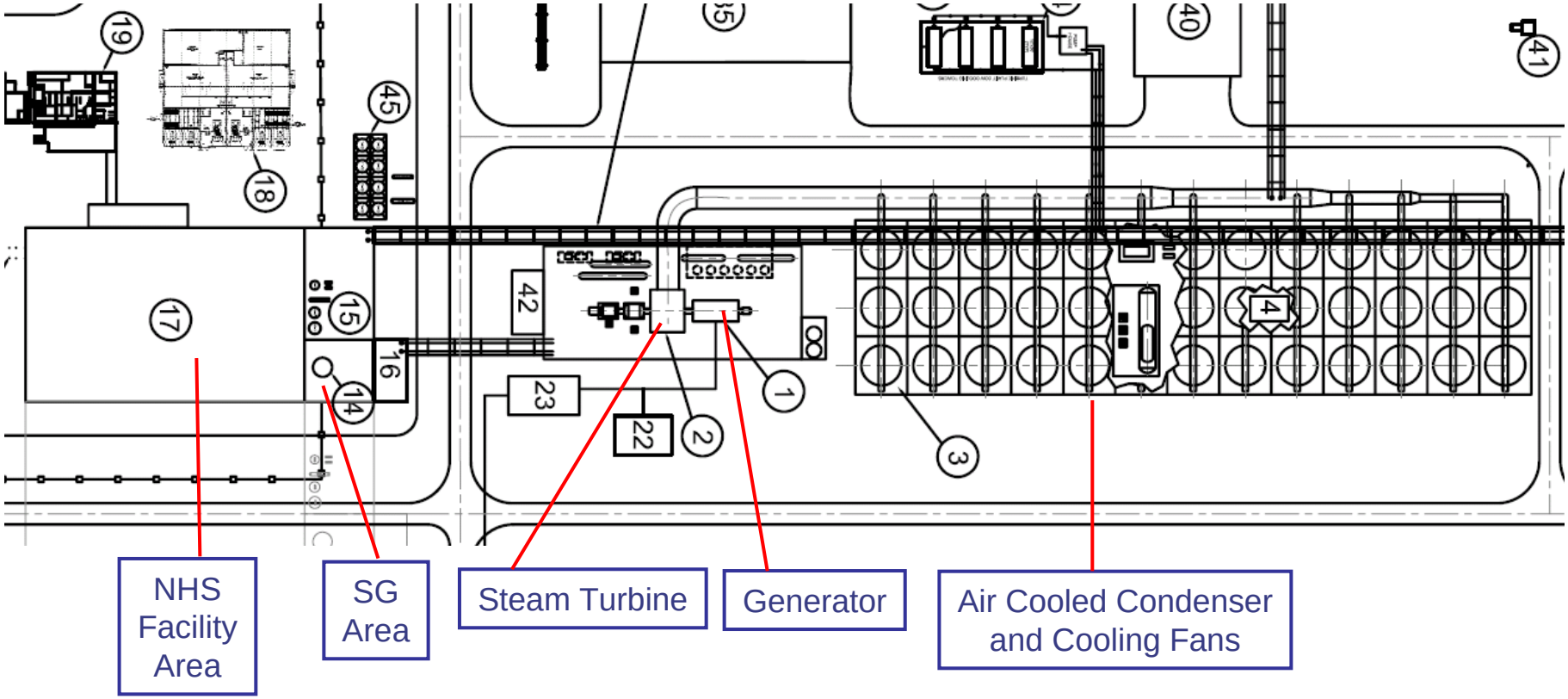

P B M R

Steam Generator Design Data Needs

- Materials
  - Environmental effects
  - Bi-metallic welds
- Performance
  - Flow and heat transfer
  - Flow-induced vibration/acoustic effects
  - Fretting and wear protection
  - Insulation
  - Seals
  - Feedwater orifice requirements
  - Tubing Inspection Methods and Equipment
- Manufacturing
  - Large Helical Coil Fabrication
  - Lead-in/Lead-out/ Transition/Expansion Loop Mockups
  - Instrumentation Attachment

P B M R

PCS Future Studies

- Steam Generator Design Trade Study
  - Optimum number of SGs
  - Alternate SG concepts
- Rankine Cycle Trade Study
  - Reheat vs. non-reheat
  - Performance and cost optimizations
- Design Basis Transient Study
  - Identify and evaluate limiting transients

P B M R

Outline

- Special Study 20.4 – NGNP Power Conversion System
  - Recommended Cycles
  - Characteristics Influencing PCS Integration
- Special Study 20.3 - High Temperature Process Heat Transfer and Transport
  - Key Inputs
    - Application Technical Requirements
    - NGNP Demonstration Objectives
    - Results of Related Special Studies
  - HTS Trade Studies and Assessments
    - Secondary HTS Working Fluid
    - IHX Design Options
    - IHX Readiness Assessment
  - HTS Options and Recommended Configuration
- HTS Preconceptual Design
  - Design Overview
  - Technical Risks and Design Data Needs
  - Future Studies
- PCS Preconceptual Design
  - Design Overview
  - Technical Risks and Design Data Needs
  - Future Studies
- Summary and Conclusions

P B M R

Summary and Conclusions

- Reference HTS configuration recommended that:
  - Optimally supports Commercial NGNP for hydrogen production + electricity
  - Minimizes technical risk in areas not directly related to commercial objectives
- IHX represents most significant technical risk
  - Multi-technology path recommended to maximize likelihood of success
  - Split IHX focuses risk to and provides flexibility for retrofit
- PCS is based on conventional Rankine cycle
  - Steam Generator is principal development issue

Thank You!

Westinghouse NGNP Team

NGNP-07-RPT-001 **May 2007**
Revision 0

NGNP and Hydrogen Production Preconceptual Design Report

SECTION 7: HYDROGEN PRODUCTION SYSTEM

Revision 0

APPROVALS

Function	Printed Name and Signature	Date
Author	Charles O. Bolthrunis Shaw E &C	May 21, 2007
Reviewer	Edward J. Lahoda Westinghouse Electric Co., LLC	May 21, 2007
Approval	Edward Brabazon Shaw Environmental & Infrastructure	May 21, 2007

Westinghouse Electric Company LLC
Nuclear Power Plants
Post Office Box 355
Pittsburgh, PA 15230-0355

©2007 Westinghouse Electric Company LLC
All Rights Reserved

LIST OF CONTRIBUTORS

Name and Organization	Date
Charles Bolthrunis Shaw, Energy & Chemicals	May 2007
James C. Bedi Shaw, Energy & Chemicals	May 2007
Nelson L. Nemser Shaw, Environmental & Infrastructure	May 2007
Keith Ludwig Air Products and Chemicals, Inc.	May 2007
Edward J. Lahoda Westinghouse Electric Co.,LLC	May 2007
Peter R. Mulik Westinghouse Electric Co.,LLC	May 2007
Daniel Allen Technology Insights	May 2007

BACKGROUND INTELLECTUAL PROPERTY

Section	Title	Description
NONE		NONE

REVISION HISTORY

RECORD OF CHANGES

Revision No.	Revision Made by	Description	Date
0	Charles O. Bolthrunis Shaw E &C	Initial Issue	May 21, 2007

DOCUMENT TRACEABILITY

Created to support the following Document(s)	Document Number	Revision
NGNP and Hydrogen Production Preconceptual Design Report	NGNP-01-RPT-001	0

TABLE OF CONTENTS

LIST OF TABLES **7-8**

LIST OF FIGURES **7-9**

7 HYDROGEN PRODUCTION SYSTEMS **7-10**

7.1 SELECTION OF THE REFERENCE WATER-SPLITTING TECHNOLOGY FOR NGNP **7-19**

7.1.1 CHARACTERISTICS OF THE TECHNOLOGIES EVALUATED **7-19**

7.1.1.1 Sulfur-Iodine Process 7-19
7.1.1.1.1 Chemistry 7-19
7.1.1.1.2 Thermodynamic features 7-19
7.1.1.1.3 Process features 7-19
7.1.1.2 Hybrid Sulfur Process 7-21
7.1.1.2.1 Chemistry 7-21
7.1.1.2.2 Thermodynamic features 7-22
7.1.1.2.3 Process features 7-23
7.1.1.3 High Temperature Steam Electrolysis 7-23
7.1.1.3.1 Chemistry 7-24
7.1.1.3.2 Thermodynamic features 7-24
7.1.1.3.3 Process features 7-25

7.1.2 ASSESSMENT CRITERIA AND WEIGHTING **7-26**

7.1.2.1 Definition of Criterion 7-27
7.1.2.1.1 Categories 7-27
7.1.2.1.2 Definitions and Weighting 7-28

7.1.3 ASSESSMENT AND SCORING **7-32**

7.1.3.1 NGNP R&D Requirements/Cost/Risk 7-32
7.1.3.2 Vendor/Supplier Development 7-33
7.1.3.3 Regulatory Infrastructure Development 7-33
7.1.3.4 Process Complexity 7-33
7.1.3.5 Availability of Processing Consumables 7-34
7.1.3.6 Feedstock Processing Requirements 7-34
7.1.3.7 Product/Waste Stream Processing Requirements 7-34
7.1.3.8 Safety, Health & Environmental Risk 7-34
7.1.3.9 Cost Enhancement Potential 7-35
7.1.3.10 Hydrogen Production Efficiency 7-35
7.1.3.11 Operability 7-35
7.1.3.12 Availability 7-36
7.1.3.13 Capital Cost 7-36
7.1.3.14 Hydrogen Product Cost 7-36

7.1.4 MATRIX RESULTS **7-38**

7.1.4.1 Full matrix results 7-38
7.1.4.2 Re-evaluation of the Matrix Results 7-39

7.1.5 FIT FOR NGNP MISSION **7-40**

7.1.5.1 Schedule requirements 7-41

7.1.5.2 Cost of final H_2 product 7-41

7.1.6 SELECTION OF REFERENCE TECHNOLOGY 7-41

7.2 GENERAL OVERVIEW 7-42

7.2.1 FUNCTIONS AND REQUIREMENTS OF THE NGNP HYDROGEN PRODUCTION SYSTEM 7-42

7.2.1.1 Functions of the NGNP Hydrogen Production System 7-42
7.2.1.2 Requirements of the Hydrogen Production System 7-43
7.2.1.3 Description of the Hydrogen Production System 7-47
7.2.1.4 Major Interfaces of the Hydrogen Production System 7-48
7.2.1.5 System Operation of the Hydrogen Production Unit 7-49

7.3 HYDROGEN PRODUCTION SYSTEMS 7-51

7.3.1 FEED AND UTILITY SUPPLY SYSTEM 7-51

7.3.1.1 Feed and Utility Supply System Functions and Requirements 7-51
7.3.1.1.1 Functions 7-51
7.3.1.1.2 Requirements 7-51
7.3.1.2 Feed and Utility Supply Description 7-53
7.3.1.2.1 Ultra Pure Water System 7-53
7.3.1.2.2 Oxygen Scrubber Makeup Supply 7-54
7.3.1.3 Feed and Utility Supply System Major Interfaces 7-54
7.3.1.4 Feed and Utility Supply System Operation 7-54

7.3.2 SULFURIC ACID DECOMPOSITION SYSTEM 7-55

7.3.2.1 Sulfuric Acid Decomposition System Functions and Requirements 7-55
7.3.2.2 Sulfuric Acid Decomposition System Description 7-56
7.3.2.2.1 Concentrator 7-56
7.3.2.2.2 Decomposer 7-58
7.3.2.3 Sulfuric Acid Decomposition System Major Interfaces 7-59
7.3.2.4 Sulfuric Acid Decomposition System Operation 7-60
7.3.2.4.1 Steady State Process Description 7-60
7.3.2.4.2 Non-Steady State Operation 7-61

7.3.3 ELECTROLYSIS SYSTEM 7-62

7.3.3.1 Electrolysis System Functions and Requirements 7-62
7.3.3.2 Electrolysis System Description 7-63
7.3.3.2.1 Electrolyzer 7-63
7.3.3.3 Electrolysis System Major Interfaces 7-67
7.3.3.4 Electrolysis System Operation 7-68
7.3.3.4.1 Steady State Process Description 7-68
7.3.3.4.2 Non-Steady State Operation 7-69

7.3.4 PRODUCT PURIFICATION SYSTEM 7-69

7.3.4.1 Product Purification System Functions and Requirements 7-69
7.3.4.2 Product Purification System Description 7-70
7.3.4.2.1 Hydrogen Purification 7-70
7.3.4.2.2 Oxygen Purification 7-71
7.3.4.3 Product Purification System Major Interfaces 7-71
7.3.4.4 Product Purification System Operation 7-72
7.3.4.4.1 Hydrogen Purification 7-72

7.3.4.4.2 Oxygen Purification....7-75

7.3.5 PRODUCT STORAGE AND DELIVERY SYSTEM....7-77
7.3.5.1 Product Storage and Delivery System Functions and Requirements....7-77
7.3.5.2 Product Storage and Delivery System Description....7-77
7.3.5.3 Product Storage and Delivery System Major Interfaces....7-78

7.3.6 WASTE TREATMENT AND DISPOSAL SYSTEM....7-78
7.3.6.1 Waste Treatment System Functions and Requirements....7-78
7.3.6.2 Waste Treatment System Description....7-79
7.3.6.3 Waste Treatment System Major Interfaces....7-79
7.3.6.4 Waste Treatment System Operation....7-79

7.3.7 CONTROL AND INSTRUMENTATION SYSTEM....7-80
7.3.7.1 Control and Instrumentation System Functions and Requirements....7-80
7.3.7.2 Control and Instrumentation System Description....7-80
7.3.7.3 Control and Instrumentation System Interfaces....7-81
7.3.7.4 Control and Instrumentation System Operation....7-81

7.4 HYDROGEN PRODUCTION SYSTEMS DESIGN DATA NEEDS....7-82

7.4.1 BASIC DATA DDNS....7-82
7.4.1.1 Functions....7-82
7.4.1.2 Key Requirements....7-82
7.4.1.3 Design Data Needs....7-82

7.4.2 SUPPLEMENTARY MATERIALS DDNS....7-91
7.4.2.1 Functions....7-91
7.4.2.2 Key Requirements....7-91
7.4.2.3 Design Data Needs....7-91

7.4.3 FEED PURIFICATION DDNS....7-93
7.4.3.1 Functions....7-93
7.4.3.2 Key Requirements....7-93
7.4.3.3 Design Data Needs....7-93

7.4.4 DECOMPOSER DDNS....7-101
7.4.4.1 Functions....7-101
7.4.4.2 Key Requirements....7-101
7.4.4.3 Design Data Needs....7-101

7.4.5 SULFURIC ACID CONCENTRATOR DDN....7-117
7.4.5.1 Functions....7-117
7.4.5.2 Key Requirements....7-117
7.4.5.3 Design Data Needs....7-117

7.4.6 SO_2 ABSORBER DDN....7-121
7.4.6.1 Functions....7-121
7.4.6.2 Key Requirements....7-121
7.4.6.3 Design Data Needs....7-121

7.4.7 ELECTROLYZERS DDNS....7-124
7.4.7.1 Functions....7-125
7.4.7.2 Key Requirements....7-125
7.4.7.3 Design Data Needs....7-125

7.4.8 PRODUCT PURIFICATION DDNS 7-139
7.4.8.1 Functions 7-139
7.4.8.2 Key Requirements 7-139
7.4.8.3 Design Data needs 7-139

7.4.9 INSTRUMENT AND CONTROLS DDNS 7-142
7.4.9.1 Functions 7-142
7.4.9.2 Key Requirements 7-142
7.4.9.3 Design Data needs 7-142

7.5 HYDROGEN PRODUCTION SYSTEM COMPLEXITY, RISKS AND FUTURE STUDIES 7-145

7.5.1 HYDROGEN PRODUCTION SYSTEM COMPLEXITY AND RISKS 7-145
7.5.1.1 Complexity 7-145
7.5.1.2 Risks 7-146

7.5.2 HYDROGEN PRODUCTION SYSTEM FUTURE STUDIES 7-148
7.5.2.1 Trade Studies 7-148
7.5.2.2 Conceptual Design Scope 7-149
7.5.2.2.1 Flowsheet development 7-149
7.5.2.2.2 Heat and Material Balance 7-149
7.5.2.2.3 Equipment design 7-149
7.5.2.2.4 Manufacturing Development 7-149
7.5.2.2.5 Operations 7-150

REFERENCES 7-151

LIST OF ASSUMPTIONS 7-153

APPENDICES 7-154

LIST OF TABLES

Table 7.0-1: Risk/Cost Analysis 7-11
Table 7.1-1: Weighing Factor Translation 7-38
Table 7.1-2: Ratings Translation 7-38
Table 7.1-3: Evaluation of Hydrogen Processes 7-39
Table 7.1-4: HTSE Compared with HyS for Demonstration Readiness and Commercialization Potential 7-40
Table 7.3-1: Typical Specifications of Ultra Pure Water 7-52
Table 7.3-2: Electrolysis Test Parameters and Design Data 7-64
Table 7.4-1: Design Data Needs for Basic Data 7-82
Table 7.4-2: Design Data Needs for Supplementary Materials 7-91
Table 7.4-3: Design Data Needs for Feed Purification 7-93
Table 7.4-4: Design Data Needs for the Decomposer 7-102
Table 7.4-5: Design Data Needs for the Sulfuric Acid Concentrator 7-118
Table 7.4-6: Design Data Needs for the SO2 Absorbers 7-121
Table 7.4-7: Design Data Needs for the Electrolyzers 7-126
Table 7.4-8: Design Data Needs for Product Purification 7-139
Table 7.4-9: Design Data Needs for Instrument and Controls 7-142

LIST OF FIGURES

Figure 7.1-1: Schematic of the Sulfur-Iodine Process 7-20
Figure 7.1-2: Block Diagram of the Westinghouse Sulfur Process 7-22
Figure 7.1-3: Representative HTSE Schematic Process Flow Diagram 7-25
Figure 7.2-1: NGNP Systems Interfaces and Interactions 7-47
Figure 7.2-2: HPS Sub-System Interactions and Interfaces 7-50
Figure 7.3-1: Preliminary Concept for the Concentrator 7-57
Figure 7.3-2: Preliminary Concept for the Decomposer 7-59
Figure 7.3-3: Schematic of HyS Electrolysis Reaction 7-64
Figure 7.3-4: SRNL Test Cell Schematic 7-65
Figure 7.3-5: Electrolysis Cell Assembly Concept 7-66
Figure 7.3-6: Typical Electrolyzer Rack 7-67

7 HYDROGEN PRODUCTION SYSTEMS

SUMMARY AND CONCLUSIONS

The objective of this section of the Preconceptual Design Report (PCDR) is to describe the design of the Hydrogen Production System (HPS) of the Next Generation Nuclear Plant (NGNP). Although the results are reported here, this study was carried out with the Special Studies and prior to the beginning of the Preconceptual Design effort proper. The entire Preconceptual design was therefore executed on the basis that the Hybrid Sulfur (HyS) process was selected as the reference HPS technology. This section includes a discussion of the current state of development of water-splitting technology, the selection of the water-splitting technology for the reference design for this system, a description of the functions and requirements of the system and its subsystems, a description of these systems, their interfaces and operations, and a discussion of the work remaining to bring this technology to commercialization. This includes a description of the risks and complexities remaining in the technology and its path to commercialization as well as suggestions for future studies.

Technology Selection

The objective of this study is to select a reference water-splitting technology for the NGNP and to recommend a path forward based on that selection. Selection was based on four fundamental questions:

Will the technology work on a commercial scale?
What are the risks involved?
What are the costs associated with the technology?
How well does the technology fit with the mission of the NGNP?

Three leading water-splitting technologies were evaluated: Sulfur-Iodine (SI), Hybrid Sulfur (HyS), and High Temperature Steam Electrolysis (HTSE).

An initial semi-quantitative evaluation was made by a team of engineers familiar with all three technologies. The evaluation was based on fourteen criteria which were selected to include the most important issues, defined so as to avoid overlapping, and weighted based on relative importance. Scores were awarded by the team to each technology for each criterion and an initial selection was made based on those scores. The HyS process was used as a benchmark and the other technologies were scored higher or lower based on their judged relative performance or potential based on each criterion. A further analysis was made by categorizing the criteria as either risk-related or cost-related. The results are reported both in their raw form and as a final risk and cost summary. The categorized criteria are as follows:

Risk

Requirement for research and development
Inherent complexity of the process
Safety, health and environmental risk
Availability of processing consumables
Need for development of a regulatory infrastructure
Feedstock processing requirements
Product and waste processing requirements
Need for development of a vendor and supplier community

Cost

Cost of the Hydrogen product
Hydrogen production efficiency
Plant capital cost
Plant operability
Plant availability
Potential for cost savings

The technology selection was then re-evaluated in the light of these summary categories. A final evaluation was made by assessing the appropriateness of each technology for fulfilling the mission of the NGNP.

The results of the selection evaluation can be summarized by the following matrix:

Table 7.0-1: Risk/Cost Analysis

	SI	HyS	HTSE
Risk (60%)	3.5	6.0	6.7
Cost (40%)	4.2	4.0	2.9
Total	7.7	10	9.6

This analysis shows that the SI process has significantly more technical risk than either of the other two. Indeed high risk is the overriding factor in causing the SI process to score low in the overall results. While HTSE has a slight advantage in technical risk over HyS, it appears to be an inherently more costly technology and therefore less likely to be commercially viable. The difference between SI and HyS figure of merit for cost is not significant.

In the course of the analysis, technology development issues were reviewed. As a result, the team recommends a shift in emphasis to the research and development efforts. In some cases, technology development efforts have been concerned with enhancements such as efficiency improvements and have not paid adequate attention to enabling technologies. Two of the issues that require additional emphasis are the development of practical flowsheets and mass and energy balances. The currently available flowsheets for all three technologies contain steps that would be unlikely or even impossible to implement in a commercial plant. Basic thermodynamic property data is missing for the SI and HyS technologies. Reliable simulations cannot be generated without them. Practical materials of construction and designs for equipment must also be investigated. This will undoubtedly generate additional design data needs (DDNs). Catalyst and electrode lifetime are critical to commercial success. It also became clear from this analysis that none of the three technologies is certain to be ready for commercial scale demonstration in time to meet the NGNP schedule. Each of the three has significant technology risks.

The assessment of fit with the NGNP mission indicated that the SI process is a very good user of process heat and enjoys the best theoretical efficiency of the candidate processes. On the other hand, there remain significant technical barriers to eventual commercialization and to realization of the high theoretical efficiency. The HyS process is a good user of process heat and is considered the best candidate to become a large-scale stationary commercial process. While high temperature steam (about 750°C) is required for efficient operation of the HTSE process, the amount of thermal energy actually utilized at these temperatures is small. Only about 15% of the energy input to the HTSE process is delivered as heat; the remainder is delivered as electricity. HTSE is, therefore, not likely to be a compelling demonstration of the utility of HTGRs for high-temperature process heat. Moreover, the economics of the HTSE process are more speculative with extrapolations from the closely related solid oxide fuel cell programs. HTSE is likely to be less cost-competitive than either of the other technologies. It does not, however, face product purity issues as do HyS and SI. The HyS process was therefore chosen as the reference technology. HTSE, on the other hand, is an excellent candidate as a back-up technology.

Conclusions

- Meeting the NGNP schedule will be a challenge for any of the candidate technologies.
- Hybrid Sulfur is the most likely technology to become a commercial technology using a high-temperature nuclear reactor as a heat source.
- High-Temperature Steam Electrolysis has fewer development issues than either of the other two technologies, but is less likely to be cost competitive.

- Sulfur Iodine technology has higher barriers to commercialization, technology risk, and cost.

Recommendations

- Select Hybrid Sulfur as the reference water-splitting technology for the NGNP
- Carry High Temperature Steam Electrolysis (HTSE) as a lower risk, higher cost alternative.
- Shift R&D efforts away from process enhancements and toward more practical enabling developments. One might direct efforts away, for example, from high temperature membrane and alternative cycle work and toward some of the tasks listed below.
- Developing practical flowsheet and mass and energy balances
- Measuring thermodynamic and transport properties
- Developing primary and supplementary materials of construction
- Designing commercial scale equipment
- Developing longer catalyst and electrode life
- Scaling up electrolysis cells

Hydrogen Production System Preconceptual Design – HyS Reference

The Hydrogen Production System (HPS) serves to take thermal energy from the Heat transport System (HTS) and electrical energy and water from the Balance of Plant Systems (BOP), and decompose the water into hydrogen and oxygen. The NGNP HPS is made up of seven sub-systems: a Feed and Utility Supply System (FUS), a Sulfuric Acid Decomposition System (SAD), an Electrolysis System (ELE), a Product Purification System (PPU), a Product Storage and Delivery System (PSD), a Waste Treatment and Disposal System (WTD), and a Control and Instrumentation System (PCN). The components of the fist six systems are pieces of equipment and piping. The PCN is comprised of control valves, sensors, wiring, Programmable Logic Controllers (PLCs), and a Distributed Control System (DCS).

The main components are the Sulfuric Acid Concentrator (Concentrator), the Sulfuric Acid Decomposer (Decomposer), the SOx Cooler, the SO2 absorbers (Absorbers) and the Electrolyzers. Each of these plays a major role in the primary function of the HPS.

The functions currently identified for the Feed and Utility Supply System (FUS) include the purification of feed water to the Electrolysis System (ELE) and the supply of sulfuric acid to the Sulfuric Acid Decomposition System (SAD) and caustic to the Product Purification System (PPU). These are handled easily by existing technology. For the NGNP HPS it has been assumed that ultra-pure feed water is required. The FUS may also be required to purify sulfuric acid make-up or recover, purify, and recycle sulfur dioxide, depending upon the results of future trade studies.

The Sulfuric Acid Decomposition System is made up of the Sulfuric Acid Storage Tank and the piping, equipment and pumps that deliver acid to the Concentrator. The Sulfuric Acid Concentrator and its associated Recuperator concentrates the sulfuric acid feed to the Decomposer. The Decomposer takes thermal energy from the HTS and uses it first to decompose sulfuric acid to sulfur trioxide and water and then to decompose the sulfur trioxide into sulfur dioxide and oxygen. The decomposed vapors consisting of oxygen, sulfur dioxide, sulfur trioxide and steam pass through the Recuperator and Concentrator to recover heat and are cooled and partially condensed in the SOx Cooler before being delivered to the Electrolysis System. The largest technology challenges associated with the HyS process are found within this system. The decomposition catalyst has not been proven for long-term operation. Design of the Decomposer is still under development. Materials of construction have not been identified for many of the service environments in this system.

The Electrolysis System consists of the Electrolyzers, Absorbers and their associated piping, pumps and auxiliary vessels. The sulfur dioxide-laden oxygen is separated from the condensed acid leaving the SOx Cooler. This oxygen passes up through five stages of absorption where the sulfur dioxide is scrubbed counter currently from the product oxygen. The sulfur dioxide concentration is lowered between stages by oxidation to sulfuric acid at the Electrolyzer anodes. The oxygen is delivered to the PPU for final purification. The acid combined with the separated liquid from the SOx Cooler is returned to the Sulfuric Acid Storage Tank after being stripped of any remaining oxygen. Hydrogen, produced by reduction of protons at the cathodes of the Electrolyzer is also sent to the PPU for purification. The main benefit of this technology over water or steam electrolysis is that the acid electrolyte reduces the voltage requirement significantly and, thus, improves the efficiency. The chief technology challenges in this system are the development and scale-up of the Electrolyzer. In addition, the tolerance of the electrolyzer to impurities in the electrolyte has not been determined. Low tolerance may impose important additional requirements on the Feed and Utility Supply System. Current work with Proton Exchange Membranes (PEMs) in this service indicate that sulfur species may migrate through the membrane.

The Product Purification System (PPU) is made up of two subsystems; an oxygen purification system and a hydrogen purification system. The oxygen system consists of a caustic scrubber and two sets of adsorption beds along with associated regeneration equipment. The hydrogen system adsorbs moisture from the gas stream, hydrogenates trace sulfur species to hydrogen sulfide and collects it in a zinc oxide adsorber / reactor. The effluent is further dried in a second adsorption bed. The oxygen is assumed to be vented to atmosphere. Commercially available technology can reach purities of 1 to 2 parts per million by volume (ppmv) of sulfur. It is not known whether it can reach 4 parts per billion by volume (ppbv) as is required by SAE J 2719, the specification for hydrogen fuel for use in transportation fuel cells. The requirements for this system depend heavily upon the final use of the products. Some industrial applications may not require a PPU at all.

The Product Storage and Delivery System (PSD) for the NGNP HPS takes hydrogen from the PPU and delivers it to a hydrogen pipeline at the plant battery limits. It consists of a single compressor to bring the product hydrogen to pipeline pressure. For future plant designs

that may produce oxygen as a saleable product or require different forms of product delivery, this system may expand significantly. Again, depending on the final use, this system may not be required.

Any process blowdown required to maintain electrolyte purity as well as spent caustic from the Product purification system is sent to the Waste Treatment and Disposal System (WTD). This system treats these wastes by neutralization and sends them to the BOP facilities for evaporation and final disposal. The system consists of commercially available package units.

The Control and Instrumentation System (PCN) performs the control function for the other systems. The nature of this process will challenge the system in that both the Decomposer and Electrolyzer perform reactions at separate parts of an essentially continuous loop. Upsets in one part of the loop will cause upsets in all other parts and damping these will be an unusual process control task. Valve and sensor development for the aggressive environments in the plant will depend upon development of materials of construction.

The major sources of complexity in the HyS HPS are the closed-loop nature of the process and the complexity of the Decomposer. A closed loop may cause feedback amplifying deviations from steady state conditions and which could be difficult to control. Successful operation of the Decomposer will require good feed distribution to all parts of the reaction zone, good temperature distribution across the reaction zone, proper concentration of the feed acid, and ability to replace the catalyst. Meeting all these requirements is a difficult scale-up problem. Finding or developing materials that will work successfully in these aggressive conditions and at the required temperature will also be difficult. Development of a commercial sulfur trioxide decomposition catalyst with adequate life is also required.

The product quality standards must be defined as well as the means to meet them. Sulfur leakage through the Electrolyzer membrane is a concern. The concentration of impurities in the circulating acid loop may cause deterioration of the Decomposer catalyst, the Electrolyzer membrane, or some heat transfer surfaces. The required maximum impurity concentration must be determined and means found to control it.

Conclusions

The technology selection and Preconceptual Design brought to the fore several issues with the candidate technologies that gave the Westinghouse team reason to recommend further study before proceeding with the Conceptual Design of the NGNP HPS. Because it was the focus of these efforts, more concerns were raised for the HyS technology than for the others. There is some incentive, therefore, to review the major challenges faced by the candidates.

Materials of construction selection have always been seen to be a major challenge for all three technologies, but more so for HyS and SI than for HTSE. Selection of materials of construction has a major cost impact and should be examined more closely. The closed-loop nature of both the HyS and SI processes pose additional challenges. Control of impurity accumulation in the circulating loop(s) will cause additional development and capital costs that

have not been previously identified. An integrated pilot plant constructed of the materials expected to be used in the commercial plant will be needed to determine the effect of trace impurities in the acid loop, especially from corrosion products. Operational stability is also a concern. It is clear that these issues regarding the HyS process are only magnified in the SI process. Therefore the Preconceptual Design effort gave no reason to re-examine the selection of HyS over SI.

The technical issues faced by the HTSE process, on the other hand, are quite different and have not been examined in detail during this effort. Although the water feed must be very pure, commercial water purification technology is advanced and process condensate is returned to a purification system. A major challenge to this technology is the requirement to distribute high pressure and high temperature steam to a very large array of small cells while ensuring even flow distribution between them and preventing the loss of large amounts of heat. It is not clear whether these challenges are more or less serious than those faced by HyS. At the same time, the results of very recent collaboration efforts between Westinghouse and SRNL in HyS technology development have not been included in this study. Therefore, the Westinghouse team recommends the following actions prior to launching the Conceptual Design effort for the Hydrogen Production System:

- Examine the HTSE process at a level of detail similar to what has been carried out for HyS.
- Re-examine the HyS and HTSE flowsheets and equipment lists for potential cost reductions. Develop alternative flowsheets and choose a reference flowsheet for Conceptual Design.
- Optimize operating conditions and determine the sensitivity to deviations.
- Develop alternative major component designs (Decomposer and Concentrator for HyS), including a temperature-enthalpy analysis, and perform trade-off studies to select a reference design.
- Compare the HyS and HTSE technologies based on a more detailed side-by-side cost and risk evaluation to determine whether HTSE is indeed a higher cost, lower risk option.
- Determine the hydrogen and oxygen product specifications in light of their intended use.
- Initiate a materials survey for supplementary materials as well as primary materials for the entire process.

INTRODUCTION

The objective of this section of the Preconceptual Design Report (PCDR) is to describe and justify the selection of the reference water-splitting technology for the NGNP and to list the functions and requirements of the Hydrogen Production System (HPS) and of the systems that constitute it. Moreover, a description of the HPS and its systems is given along with the design data needs (DDNs) that must be fulfilled before the plant can be designed. Technical risks and process complexity that may contribute to the DDNs are discussed as well as outstanding technical issues which require further study or design work. Future studies that may help to resolve these issues are recommended. In many cases, a design phase is indicated after the name of a document, deliverable or piece of information. This indicates the design phase during which the initial issue of this document or piece of information is expected to occur. The information in this document will be revised through the subsequent design and technology development phases as the design matures.

Technology Selection

Selection of the reference technology for the HPS of the NGNP was carried out by a team of four experienced engineers all of whom are familiar with all of the three candidate technologies. The candidate technologies were Sulfur Iodine (SI), Hybrid Sulfur (HyS), and High-Temperature Steam Electrolysis (HTSE). The selection methodology was based on addressing four basic questions:

Will the technology work on a commercial scale?
What are the risks involved?
What are the costs associated with the technology?
How well does the technology fit with the mission of the NGNP?

Initially, it was assumed that the answer to the first question is affirmative for each of the candidates. Any contrary indications that arose during the analysis were noted. Risks can be categorized in various ways. Some may be risks that call into question the affirmative response to the first question. There are other risks that affect the ultimate cost and schedule of the technology development program. There are further risks that may affect the cost and schedule of the engineering, procurement and construction of the plant. The third question addresses only costs as they are currently estimated, not as they may be affected by the aforementioned risks. The third question was addressed only after assessing the technologies based on the first three.

These two questions were embodied in a set of criteria that were developed by the selection team. The criteria were then assessed for completeness and overlapping was identified. Each criterion was then carefully defined in such a way as to avoid overlapping. The criteria were then further categorized to enhance definitions and ensure against overlapping. Each criterion was then awarded a weight in accordance with its definition and relative importance in the judgment of the team. Each technology was then assessed according to each criterion and awarded a rating by the consensus of the team. The HyS process was chosen as the benchmark

process and automatically awarded a 5 for each criterion. The other two were scored higher or lower on a scale of 1 to 10. A matrix of criteria, ratings and weights was prepared and the preliminary scores were reviewed and re-evaluated. Weights and ratings were adjusted as was considered appropriate. Finally, the question of the fitness of each technology for the mission of the NGNP was evaluated. Three aspects were considered:

Value in demonstrating the application of high temperature nuclear process heat
Potential for commercialization
Ability of the required R&D to meet the NGNP schedule

Finally, conclusions were drawn and recommendations made. These include recommendations for the reference technology, a back-up technology and a suggested path forward.

Hydrogen Plant Preconceptual Design

In the design of any chemical plant, including a water-splitting plant, there are several paramount considerations that affect the design of the plant. Two of them are the end-use of the product(s) and how these products will be transported to the users. In this pre-conceptual design phase, we have assumed that the hydrogen must meet the SAE J 2719 specification for transportation hydrogen, i.e., that it will be used in fuel cell powered vehicles and that it will be delivered into a pipeline (by others) which is available at the plant battery limits. No clear determination was made on the disposition of the oxygen. This is therefore delivered at the plant battery limits at a purity, temperature and pressure suitable for disposal to atmosphere or for industrial use, but not for breathing purposes.

7.1 SELECTION OF THE REFERENCE WATER-SPLITTING TECHNOLOGY FOR NGNP

7.1.1 Characteristics of the Technologies Evaluated

7.1.1.1 Sulfur-Iodine Process

Development of the Sulfur-Iodine (SI or I-S) process began in the early 1970's by General Atomics (GA). It was considered as an all-thermal process to replace electrolysis for better energy efficiency and as a companion technology to the high-temperature gas-cooled reactors then in development. Interest in this technology has recently revived and development work including a non-integrated pilot plant in Japan and an integrated lab-scale experiment sponsored by the Gen IV program is progressing. This process uses high temperature (850 to 900°C) thermal energy from an HTGR for the decomposition of sulfuric acid to oxygen, water, and sulfur dioxide. The SI process also uses lower grade thermal energy (~400°C) to produce hydrogen from other intermediate products (HI decomposition) after several other process steps.

7.1.1.1.1 Chemistry

The SI cycle (shown in Figure 7.1-1, Reference [7-1]) is a thermochemical water splitting cycle consisting of two high temperature endothermic reactions, and a third lower temperature slightly endothermic reaction. These reactions are summarized below:

(1) $H_2SO_4 \Leftrightarrow SO_2 + H_2O + \frac{1}{2} O_2$ (~850ºC)

(2) $I_2 + SO_2 + 2\ H_2O \Leftrightarrow 2\ HI + H_2SO_4$ (~120ºC)

(3) $2\ HI \Leftrightarrow I_2 + H_2$ (300-450ºC)

7.1.1.1.2 Thermodynamic features

The SI cycle splits water using only thermal energy, and therefore requires no electrolysis step. The promise that this process holds is that it has a much higher theoretical efficiency than electrolysis methods while utilizing only water as a feedstock. Higher efficiency is a result of elimination of the losses associated with conversion of thermal to electrical energy.

7.1.1.1.3 Process features

General Atomics has performed three flowsheet analyses of the system (Reference [7-2]). In addition, the Japan Atomic Energy Research Institute has performed a continuous 48 hour demonstration of their system producing 1 liter of hydrogen per hour (Reference [7-3]). This analysis is based on the version of the SI process outlined in (Reference [7-2]) by GA dated April 2006.

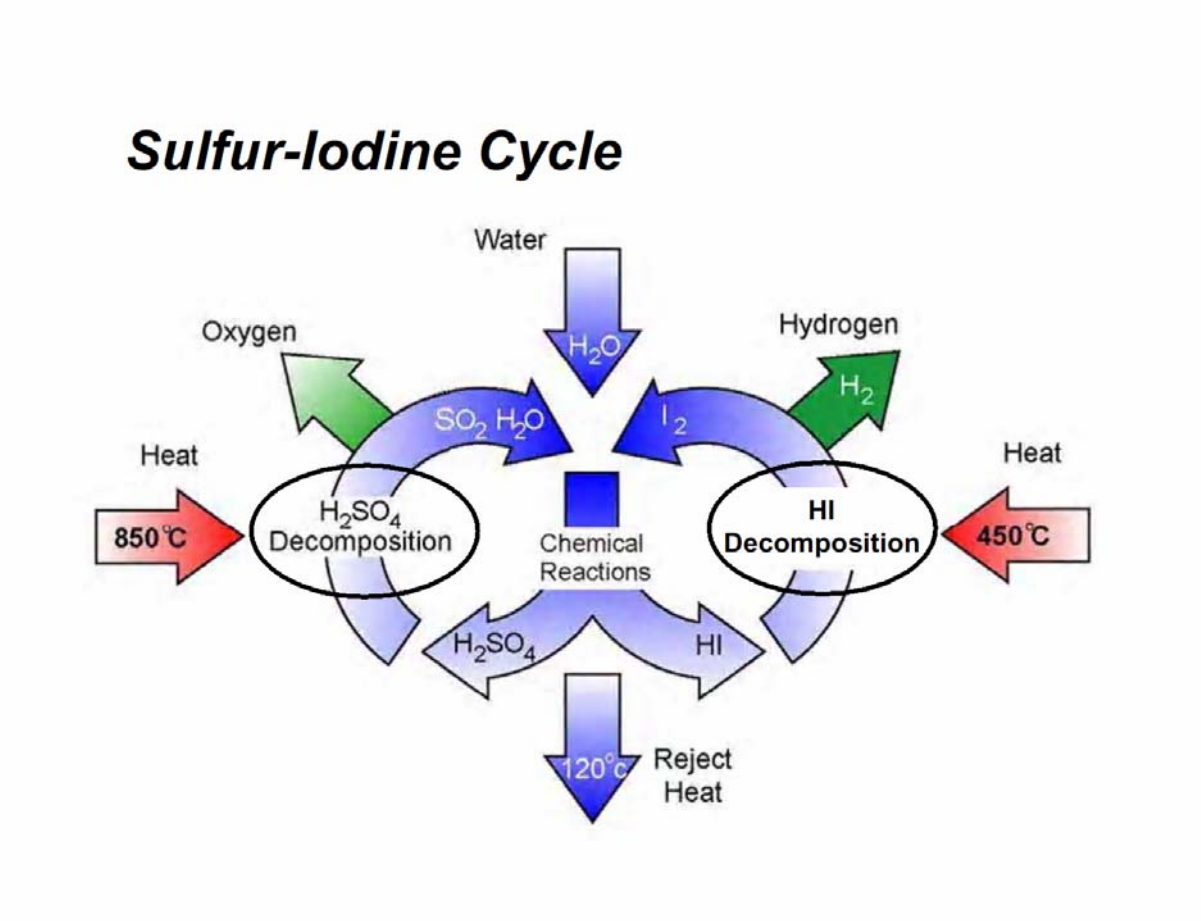

Figure 7.1-1: Schematic of the Sulfur-Iodine Process

Two major changes were made to the efficiency calculation in Reference [7-4] to make it compatible with the basis used for the HyS process:

1. Used Low Heating Value (LHV) instead of High Heating Value (HHV) for the H_2 product.
2. Deleted 15 MWe credit for turbines in the plant because these would not be used in a commercial facility.

These adjustments result in a LHV efficiency of about 35.2%. Another note on this design is the very high return temperature for the SHTS helium of 565°C. Based on work with the PBMR circulator supplier, inlet temperatures above ~350°C require significant amounts of material development and will likely be less efficient. Therefore, like the HyS process, the SI process requires a heat sink in the secondary helium loop to make it compatible with current circulator technology.

The complexity of the SI process is illustrated by the 78 major unit operations required for the process. By comparison, the HyS process requires 30 and HTSE 18. Moreover, key

steps including a three-phase separation in the Bunsen reaction section and a reactive distillation in the hydrogen iodide decomposition section will be difficult to implement commercially and may not reach required efficiencies. The hydrogen iodide decomposition step has not yet been modeled adequately and remains problematic (Reference [7-5]). Final cleanup of both the oxygen and hydrogen products will be required. Hydrogen will be contaminated with iodine species and oxygen with sulfur dioxide. The process consists of two interlocked closed loop cycles. This means that disturbances in any part of the system will affect all parts of the system and reaching steady state operation will be difficult.

7.1.1.2 Hybrid Sulfur Process

The Hybrid Sulfur Process (HyS) uses both thermochemical and electrochemical unit operations. Work on the HyS process was initiated in 1973 by Westinghouse. By 1978, an integrated laboratory bench scale model was successfully operated producing 120 l/hr of hydrogen. Work continued until 1983. No research was carried out on the HyS over the intervening 25 years. With advances in the electrochemical industries (mainly chlor-alkali production and hydrogen Proton Exchange Membrane (PEM) fuel cells), there are many opportunities for lowering the capital and operating costs and increasing the efficiency of the HyS process from what was achieved by 1983. Preliminary process evaluation work (Reference [7-6]) indicates that the HyS process is competitive with the other candidate processes.

7.1.1.2.1 Chemistry

Like the SI process, the HyS process uses high temperature (850 to 900°C) thermal energy from an HTGR for the decomposition of sulfuric acid to oxygen, water, and sulfur dioxide. The HyS process replaces the Bunsen and HI decomposition steps in the SI process with two alternative steps:

1. The absorption of SO_2 in water to release oxygen and form an electrolyzer feed.
2. The electrolysis of the sulfur dioxide and water which produces sulfuric acid and hydrogen.

Both of these steps are carried out at temperatures between 25°C and 100°C. The cycle produces hydrogen in a low temperature electrochemical step, in which sulfuric acid and hydrogen are produced from sulfur dioxide and water:

Anode: $2H_2O + SO_2 \Leftrightarrow H_2SO_4 + 2H^+ + 2e^-$
Cathode: $2H^+ + 2e^- \Leftrightarrow H_2$

The second reaction in the HyS process (same as the SI process high temperature step) is the high temperature decomposition of sulfuric acid at 850°C or above:

$$H_2SO_4 \Leftrightarrow H_2O + SO_2 + 0.5O_2$$

Previous work by Westinghouse and others has identified catalysts and process designs to carry out this reaction in concert with an HTGR.

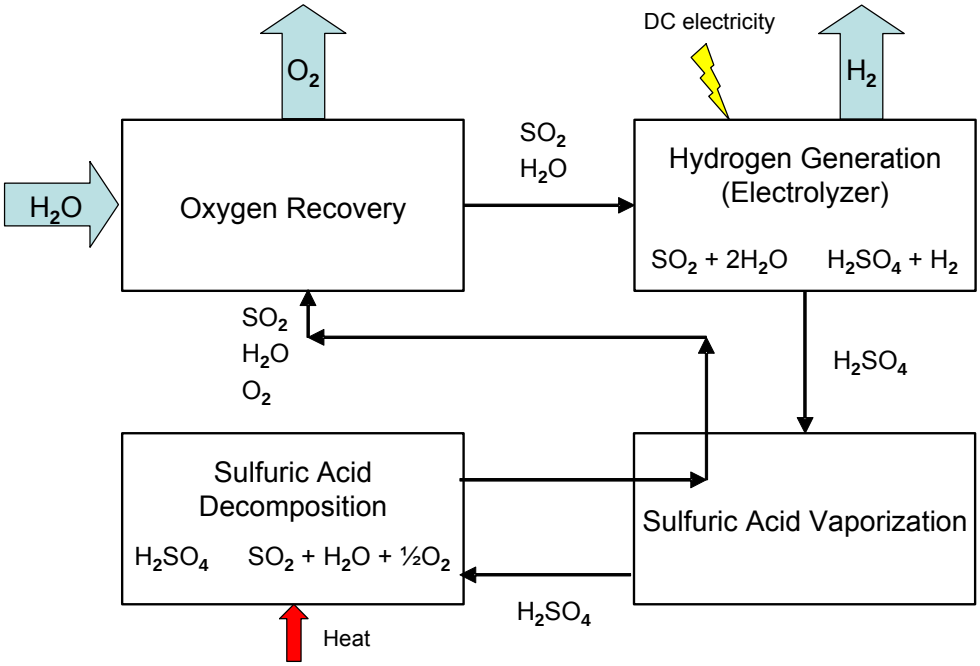

Figure 7.1-2: Block Diagram of the Westinghouse Sulfur Process

7.1.1.2.2 Thermodynamic features

The HyS process has a reduced energy need compared to alkaline water electrolysis and high temperature steam electrolysis due to the reduced voltage of the hydrogen generation step of 0.15 volts. This compares with a theoretical voltage for alkaline electrolysis of about 1.2 volts and for high temperature steam electrolysis of about 0.9 volts. In all cases, these theoretical voltages increase due to overvoltage and IR losses within practical cells. The HyS process operates in an acid medium; hence its losses are equal to or lower than in the other two water electrolysis technologies (~.0.4 to 0.5 volts for HyS versus ~0.5 to 0.7 for alkaline electrolysis and ~ 0.4 to 0.5 volts for high temperature steam electrolysis). These voltage increases are a function of the current density that is achieved. These are ~500 mA/cm^2 for HyS, ~250 mA/cm^2 for alkaline electrolysis, and ~400 to 500 mA/cm^2 for high-temperature steam electrolysis.

7.1.1.2.3 Process features

The Westinghouse work and more recent work at SRNL (Reference [7-7]) provides a fundamental design basis for the flowsheet development effort carried out in the recent past and for this study. This work identified and tested various catalytic electrodes to promote the electrolytic reaction. Results indicate that the reaction can proceed at about 0.6 volts with a current density of 200 mA/cm^2, at slightly elevated temperatures (90°C).

The efficiency of either the HyS process or the SI process depends to a large extent upon the recovery of waste heat from the decomposed vapors leaving the sulfuric acid decomposition step. In the HyS process, part of that heat is recovered by direct contact with incoming feed sulfuric acid. The heat is, thus, used most efficiently in concentrating and preheating the feed to the reaction temperature. In addition, this step condenses effluent vapors and lowers the temperature to that required by the electrolyzers. The reject heat can be conveniently used for preheating boiler feedwater. The HyS process requires a large amount of electricity, and the boiler feedwater preheat contributes to improving the process efficiency when a Rankine cycle is used for electricity generation.

The absorption of SO_2 gas from the product oxygen and subsequent electrolysis of the solution to form sulfuric acid lends itself to stage-wise operation. The HyS reference design uses five stages of alternating absorption and electrolysis to collect SO_2 and to generate hydrogen. As in the SI process, the product oxygen will have to be scrubbed. PEMs currently under study leak small amounts of sulfur species into the product. If this problem can be solved, hydrogen product cleaning will not be needed.

Like the SI process, the HyS process consists of a closed loop cycle and therefore suffers from some of the same control issues. The HyS process, however, is only a single cycle, not two interlocking cycles.

7.1.1.3 High Temperature Steam Electrolysis

High temperature steam electrolysis (HTSE) is the electrolysis of steam at high temperature. It is essentially a solid oxide fuel cell (SOFC) run in reverse. There are, however, some important differences (Reference [7-8]). A temperature range of approximately 750-800°C is associated with the HTSE process in current development. The lower limit is set by the characteristics of the solid oxide membrane. The upper limit is set by materials considerations (ferritic stainless steel interconnect plates). Compared to ambient temperature electrolysis, HTSE has a thermodynamic advantage described in Section 7.1.1.3.2, below. Because the electric power for electrolysis is generated from heat at an efficiency of between 30% and 50%, the overall efficiency for HTSE from heat source to hydrogen product, compared to room temperature electrolysis, can be greater because HTSE uses less electric energy and more of the source heat directly.

The HTSE process makes extensive use of over 30 years of R&D work on high temperature fuel cells funded by the DOE. Based on this work, there are two geometries that are currently available:

1. Flat cells that are currently limited to about 100 cm^2 each with metallic connections and seals between plates, and
2. Tubular cells that have areas of about 800 cm^2 each and which utilize all ceramic electrical connections and seals.

Extensive work has been carried out with the tubular SOFCs including tests up to 40,000 hours. The tubular solid oxide electrolysis cells (SOECs) have been tested up to 3,000 hours; flat SOECs up to 1,000 hours. Development of HTSE flat cells within the US DOE Nuclear Hydrogen Initiative is proceeding toward an integrated lab-scale demonstration, but several technical issues limiting cell size remain (Reference [7-9]).

7.1.1.3.1 Chemistry

The HTSE process has the advantage over the other candidate hydrogen generation processes of using no chemicals and only feed water to generate hydrogen and oxygen. This reduces the materials compatibility problems that are faced by the SI, HyS, and alkaline electrolysis processes and has the potential of generating extremely pure products.

7.1.1.3.2 Thermodynamic features

The thermodynamic advantage of the HTSE process over the alkaline electrolysis of water is summarized as follows (References [7-10], [7-11] and [7-12]):

- Cell overvoltage is reduced with increased temperature. In any electrolysis process, overvoltage is the voltage required to drive the process, and it is a direct indicator of electrical energy demand. The principal advantage of HTSE derives from its reduced overvoltage characteristics, relative to low-temperature processes.
- Compression is done in the liquid state. The work required as electric power to raise the pressure of water to the ultimate delivery pressure is substantially lower than that which would be required to compress the product hydrogen. This is a feature partially shared by the other candidate processes, but it is a factor in the efficiency of HTSE over conventional ambient temperature electrolysis.
- The liquid-to-vapor phase transition uses thermal energy, as opposed to electrical energy, as is the case with conventional electrolysis wherein electricity provides the energy both to vaporize the water and to split the water into its constituent parts. With HTSE, thermal energy is used to provide the energy for the phase change, thus avoiding electricity production losses for that component of energy.
- Electrolysis is an endothermic reaction. At ambient temperature the heat input is a small fraction and is either supplied by ohmic heating or by heat flow from the surroundings. As the temperature of the electrolysis process is increased, the total

energy input is about constant, but the fraction of energy that must be input as electricity decreases and the fraction input as thermal energy increases.

For thermodynamic efficiency, the HTSE process system design needs to include recuperation of the heat in the electrolyzer product streams for feed heating. As this recuperation is increased, the amount of high-temperature heat needed decreases. Conversion of steam/water to hydrogen is about 50% per pass creating a large recycle that requires recuperation

7.1.1.3.3 Process features

There are a number of studies of the HTSE process with conceptual level process flowsheets and/or cycle parameters. The most developed is included in the General Atomics report entitled, "H2-MHR Pre-conceptual Design Report: HTE-Based Plant." (Reference [7-10]).

Figure 7.1-3 (Reference [7-13]) shows the components and arrangement of a HTSE hydrogen production unit combined with the PBMR and a power conversion system. Hydrogen is added to the steam for the purpose of maintaining a reducing atmosphere on the electrodes. Because this reference process design does not include an intermediate heat transfer loop, hydrogen in the feed steam is separated by only one heat transfer surface from the primary loop of the HTGR. An intermediate loop containing helium or some other gas would act as a barrier to the migration of hydrogen into the reactor or tritium into the product hydrogen and will therefore likely be required for commercial operation of the process.

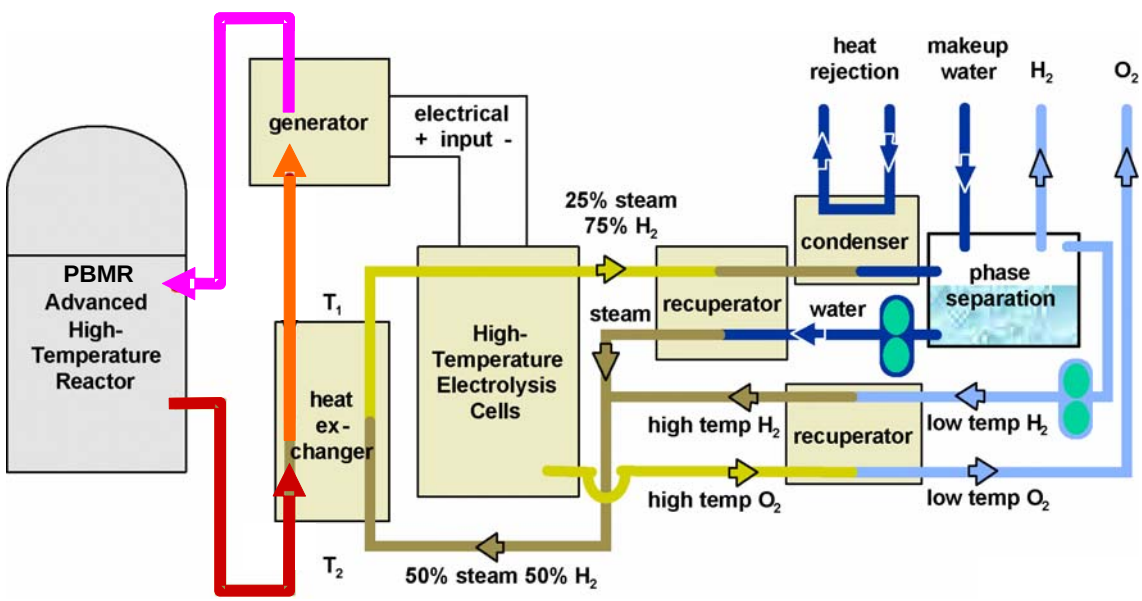

Figure 7.1-3: Representative HTSE Schematic Process Flow Diagram

Anode sweep gas (not shown in Figure 7.1-3) is incorporated to avoid some difficulties in handling pure oxygen at temperatures over 800°C. Steam is preferred because a non-oxygen-containing sweep gas improves the electrolyzer efficiency and because steam can be separated

from the oxygen downstream by condensation as water. Some designs show power recovery from the oxygen product stream, but no such oxygen turbines exist. Materials for heat exchangers for cooling hot oxygen are also problematical.

The numbers of cells, stacks of cells and modules of stacks in a hydrogen production plant will be very large if the present 100 cm^2 size can not be increased. For example, for a 600 MWt nuclear reactor heat source the HTSE process plant would have 12 million cells in 12,000 stacks in 1500 modules (Reference [7-14]). If the individual cell area can be made twenty times larger (cells ~500 mm on a side), there will be concern about reliably sealing the stacks (Reference [7-15]).

For tubular HTSE cells, the stream barrier sealing technique may be sufficient to eliminate the need for seals but will require some development and testing. In addition, there are reasonably large scale facilities available for manufacturing these types of cells. The economic advantage that this form of the HTSE technology may offer due to the larger individual cells and the longer lifetimes of the all ceramic electrical connections makes this concept attractive.

The combined effect of maximizing heat recuperation and operating in the thermal neutral mode is that the direct high temperature source heat required by the process can be reduced to as low as 8% of total energy required for water splitting. This means that even a very small high temperature heat source can supply sufficient thermal energy for an extremely large hydrogen plant. A nuclear reactor used to generate hydrogen using the HTSE process would be essentially an electricity generating facility with only a very small fraction of the output used to heat feed steam.

7.1.2 Assessment Criteria and Weighting

Discriminating criteria were developed by brainstorming and were then analyzed, consolidated, and more clearly defined. The team attempted to select and define each criterion such that it would have the following characteristics:

- Address a key feature that would clearly differentiate between the candidate technologies
- Exclude as much as possible the features covered by another criterion.
- Be clearly defined
- Meet the test of common sense

In this way, overly weighing a given feature of any process was avoided. At the current state of knowledge of any of these technologies, a more detailed analysis is not reasonable and attempting one could lead to erroneous results.

7.1.2.1 Definition of Criterion

7.1.2.1.1 Categories

The final set of criteria were then sorted into five categories and defined. The five categories and the criteria within each category that were chosen were:

Readiness
- NGNP R&D Requirements/Cost/Risk
- Vendor/Supplier Development
- Regulatory Infrastructure Development

Process Design
- Process Complexity
- Availability of Processing Consumables
- Feedstock Processing Requirements
- Product/Waste Stream Processing Requirements
- Safety, Health & Environmental Risk

Enhancement Potential
- Cost Reduction
- Hydrogen Production Efficiency

Performance
- Operability
- Availability

Cost
- Plant Capital Cost
- Hydrogen Product Cost

Under further consideration, it was determined that these criteria could be divided into those that were primarily cost-related and those that were risk related. This division and the results based on it are reported under the Summary and Conclusions of this section.

7.1.2.1.2 Definitions and Weighting

Readiness

NGNP R&D Requirements/ Cost/Risk:

1. Development:
   a. Number and seriousness of issues remaining in the following areas:
      i. Process fundamentals (stoichiometry, thermodynamics, kinetics)
      ii. Materials of construction
      iii. Commercially ready catalyst (cost, life, replaceablity)
      iv. Equipment design
   b. How many of these underdeveloped areas are being worked on seriously?
   c. How difficult is their solution?
   d. How firm is the funding and political support?
   e. Risks in development from current stage to commercial operation

2. Design
   a. How easily can the currently demonstrated size be scaled to the required size of the NGNP demonstration?
   b. Has a mechanical conceptual design been attempted for critical equipment items? Results?
   c. Are coded engineering materials available for all vessels? Vessel internals? Piping?
   d. Have sealing materials and methods been identified?

Weight: 10

A developed technology is a *sine qua non* of a commercial demonstration.

Vendor/Supplier Development:

1. Are commercial entities involved with the current development efforts?
2. How many major components are being fabricated in some form in an industrial setting?
3. Is there a sufficient supply of the major equipment, materials of construction or chemical needs?

Weight: 5

Although the ability of the manufacturing community to supply the needs of the NGNP HPS is critical to the ability to build the plant, current vendor readiness is not as important as readiness at the time of NGNP procurement. Future vendor readiness will depend upon the vendors' perception of the commercial potential and readiness of the technology. These issues are included in other criteria.

Regulatory Infrastructure Development:

1. Which regulatory agencies are involved?
2. Does the technology pose any unusual regulatory issues for which regulators would be unprepared?

Weight: 1

Although an important consideration for nuclear reactors, there is nothing unusual about these plants that have not already been considered by the Occupational Safety and Health Administration (OSHA) or the Environmental Protection Agency (EPA). State regulators may need to be prepared, but there is sufficient time for that. This is not a strong discriminator among technologies.

Process Design

Process Complexity:

1. Number of unit operations
2. Number of major control loops
3. Number of catalytic reactions
4. Number of solids handling steps
5. Number of consecutive reactions or separations
6. Number of chemical species
7. Number of recycles
8. Number and volume of hold-up between operations

Weight: 10

Process complexity is an early indicator of the commercial potential of a process. The more complex a process is, the more costly it is to design, build and operate. A complex process is more likely to raise serious unanticipated technology development issues.

Availability of Processing Consumables:

1. What consumable catalyst and chemicals are required by the process?
2. In what quantities?
3. Are the materials from which catalyst and chemicals are made available in the quantities required?
4. Is the cost reasonable?

Weight: 5

Availability of catalysts and chemicals is not usually a problem; however, if any of the required materials is not available, the consequences are severe.

Feedstock Processing Requirements:

1. What level of feedstock (water and any added chemicals) purity is required by the process?
2. What level of purity is commonly available in each of these materials?
3. How difficult is it to attain the required purity levels?

Weight: 6

Feed purification requirements may be more than an additional cost to the process. If the requirements are too stringent, reaching them may impact the technical and economic feasibility of the process.

Product/Waste Stream Processing Requirements:

1. What purity level is required by the product?
2. What product purity is produced by the process without additional processing steps?
3. How difficult is it to reach the purity level required?
4. What wastes are produced by the process?
5. What sort of disposal strategy is appropriate?
6. What processing is required to allow the wastes to be disposed of in a responsible manner?

Weight: 7

Product purification and waste treatment are frequently ignored during early process development, yet either can render a process technically or economically infeasible.

Safety, Health and Environmental Risk:

1. What hazardous chemicals are present in the process?
2. What are the operating temperatures and pressures?
3. What wastes are generated?
4. What are the possible fugitive vapor emissions?
5. What are the consequences of a possible leak?

Weight: 5

Although an important consideration risks to personnel and the public can to a large extent be mitigated through good engineering.

Enhancement Potential

Cost Reduction:

1. How many process trains will be required for each step in the process? What is the potential for modularization?
2. How flexible is the technology to changes in design or heat transfer fluid?
3. How flexible is the process to different combinations of cogeneration or sharing process heat?

Weight: 5

This is a reasonably important category, but the potential for cost reduction is difficult to judge for each of the technologies at this time.

Hydrogen Production Efficiency:

1. How close is the current estimated efficiency to the thermodynamic limit?
2. What's the current calculated efficiency on a common basis?
3. What is the process efficiency sensitivity to maximum temperature?
4. Is the energy integration in the flowsheet reasonable? Are there any likely pinch points?
5. What are the effects of impurity accumulation and blowdown requirements?

Weight: 2

Hydrogen production efficiency reported in the flowsheets presented in the literature are universally optimistic. If anything, most heat integration schemes presented are not commercially practical. The importance of this issue is largely symbolic.

Performance

Operability:

1. How many major control loops?
2. Is the process operable even in the steady state?
3. Can the process be easily started and shut down?
4. What additional utilities and infrastructure is required?
5. Are there and constraints on emergency shutdown or the speed of startup or shutdown?
6. What is the turndown capability of the process?

Weight: 8

Operability of a process is simply not commercial viable unless it can be operated in a reasonable fashion. This is a major consideration in all process design.

Availability:

1. What are the major maintenance requirements?
2. How often will a major shutdown be required?
3. What is the expected length of these shutdowns?

Weight: 3

This criterion was intended to focus on the relative importance of availability on commercial viability excluding its impact on the product cost. The weight was therefore not high.

Cost

Capital Cost:

Weight: 7

This criterion was intended to capture the disincentive to commercialization of capital cost over and above the effect on the product cost. As the capital cost rises, the financial risk of a project generally increases due to a longer payback period and is therefore a deterrent to investors.

Hydrogen Product Cost:

Weight: 10

The cost of the product is the key economic determinant in the commercial success and sustainability of a process.

7.1.3 Assessment and Scoring

The Sulfur-Iodine, Hybrid Sulfur and the High Temperature Steam Electrolysis technologies were evaluated using the criteria outlined above. The results of this analysis are presented below. Note that since the SI and HTSE processes were compared with the HyS process as being better than or worse than HyS in each criterion. Therefore, the HyS process was always rated as a "5". Only odd number ratings were awarded.

7.1.3.1 NGNP R&D Requirements/Cost/Risk

HTSE Rating: 7

HTSE, in comparison to the S-I and HyS processes, has thermodynamics that are well characterized and well understood, and process chemistry is fully established. For the flat cell design, the demonstration of cell stack units is underway, and there appear to be no significant technical obstacles to the integrated lab-scale demonstration scheduled for the 2007 fiscal year. Tubular cells have already been demonstrated, so there are few mechanical or chemical issues with their use.

A reference flowsheet and definitive performance expectations are not yet complete, and process operation at pressure is not to be demonstrated in the near future. However, these are not high-risk or high-cost obstacles. For flat cells, there are likely to be some problems with flow distribution, performance stability, sealing and cell size, but the R&D program is moving on these issues. Materials of construction R&D will not be as demanding as with the other technologies.

SI Rating: 3

The thermodynamics and process chemistry are not yet fully established for the $HI/H_2SO_4/I_2$ separation process. This makes modeling the process difficult and therefore the design of equipment problematic. In addition, the unit operations for separation and concentration are not yet established. A laboratory scale decomposer has been shown to be successful and an integrated laboratory scale experiment is planned to be started up this year. This process shares the sulfuric acid decomposition step with HyS therefore issues connected with this are not discriminating factors between the two. SI must also develop materials resistant to iodine and HI and develop a process to remove traces of iodine and iodic acid from the product hydrogen.

HyS Rating: 5 (default)

The HyS process thermo-chemistry, thermodynamics and process flowsheets are nearly developed. Confirmation of extrapolated data is required, but the process has been successfully modeled. There are workable laboratory scale electrolysis cells and improvements are being pursued.

7.1.3.2 Vendor/Supplier Development

HTSE Rating: 5

For HTSE, the most significant part of the process plant is the electrolyzers. Electrolyzer suppliers with production capability at the necessary scale are not yet available for flat units but may easily become available for tubular units. Siemens, for example, is in medium-scale production of tubular type Solid Oxide Fuel Cells (SOFCs), which are similar to the electrolyzers. The remaining essential elements of the plant seem to be readily available except for components handling hot oxygen. In the reference design (Reference [7-14]) these include a heat exchanger and a turbo-expander. Materials for the heat exchanger are being addressed in the R&D program and the expander is not necessary since it makes only a small contribution to process efficiency.

SI Rating: 3

In the SI materials area, the corrosive interactions of H_2SO_4 and I_2/HI are not known or documented. Saint Gobain manufactures silicon carbide material which may be used in the Decomposer, but vendors for materials or equipment in other parts of the process are unknown.

HyS Rating: 5 (default)

Possible vendors for the Decomposer and associated equipment have not been established. This is not a discriminating factor between HyS and SI. For HyS, another significant part of the process plant is the electrolyzer. Electrolyzer suppliers with production capability at the necessary scale already service the chlor-alkali industry.

7.1.3.3 Regulatory Infrastructure Development

All processes Rating: 5

Regulatory infrastructure (OSHA, EPA, State authorities) is already in place for similar plants. Any development would be equally required for any of these processes

7.1.3.4 Process Complexity

HTSE Rating: 7

HTSE has fewer unit operations than either of the two other candidates. There is only one reaction and only one catalyst is required. There are only three relatively benign circulating fluids: hydrogen, oxygen and steam/water. There are, however, a very the large number of cells, stacks of cells and modules of cell stacks and the need for the process in general to be highly integrated to achieve good thermal efficiency.

SI Rating: 3

SI has many more unit operations than either of the other candidates. Several of the steps are in themselves complex, for example, either extractive distillation or reactive distillation and separation and concentration steps. There is a need for large amounts of energy integration to achieve good thermal efficiency. SI includes seven chemical components as compared with five for HyS and three for HTSE.

HyS Rating: 5 (default)

7.1.3.5 Availability of Processing Consumables

HTSE Rating: 5

Water and replacement catalyst/electrode material are the only notable consumables. This is about the same as for the HyS process.

SI Rating: 3

This will be an important consideration for SI for the first plants due to the use of large amounts of iodine.

HyS Rating: 5 (default)

The only major consumable in addition to those used for HTSE is sulfuric acid and that is commonly available.

7.1.3.6 Feedstock Processing Requirements

All processes Rating: 5

Feedstock processing requirements appear about the same for all three processes, although HTSE may require higher purity water.

7.1.3.7 Product/Waste Stream Processing Requirements

HTSE Rating: 9

The only issue is condensation of water.

SI Rating: 3

Removal of iodic acid and iodine from the product H_2 stream is required as well as the removal of sulfur dioxide from the oxygen stream.

HyS Rating: 5 (default)

Removal of sulfur dioxide from product oxygen is required.

7.1.3.8 Safety, Health & Environmental Risk

HTSE Rating: 5

Steam/water is the main circulating fluid in HTSE and so chemical hazards are less than the other hydrogen concepts in the study. Hydrogen circulates to the high-temperature PCHX, but this is separated in most designs by an intermediate loop from the nuclear heat source.

SI Rating: 3

Large quantities of HI and I_2 added to the SI process which will have a definite negative environmental impact compared to HyS.

HyS Rating: 5 (default)

7.1.3.9 Cost Enhancement Potential

HTSE Rating: 5

Cell costs are a significant issue for HTSE and they appear to be difficult to reduce based on the apparent limits of the materials and technology.

SI Rating: 3

For the SI process, it is more difficult to achieve enhancements due to the complexity of the process and the materials that will be required as compared to the HyS process.

HyS Rating: 5 (default)

7.1.3.10 Hydrogen Production Efficiency

HTSE Rating: 5

The eventual overall optimum efficiency will be about the same as for all three hydrogen concepts in the study.

SI Rating: 3

SI will not be likely to approach the optimum efficiency because of the dependence on what appears to be an unrealistic energy integration scheme.

HyS Rating: 5 (default)

7.1.3.11 Operability

HTSE Rating: 3

Flow into both anode and cathode sides of each cell need to be balanced. The large number of cells, stacks of cells and modules of cell stacks will cause flow distribution problems. Management and control of many very high temperature streams has not been demonstrated. Overall system operation will be difficult.

SI Rating: 1

Due to the complexity of the SI process and the fact that it contains two interlocking recycle loops, operation will be considerably more difficult than HyS.

HyS Rating: 5

This process will not be easy to operate, but the others will be more difficult.

7.1.3.12 Availability

All processes Rating: 5

Each of the processes will be difficult to maintain and will require periodic maintenance shutdowns. None of the processes appear to have an advantage.

7.1.3.13 Capital Cost

HTSE Rating: 1

Capital cost for HTSE is governed by the cost of cells, stacks of cells and modules of cell stacks. Since no reference cell stack design for operation at design pressure has been developed, there is no direct basis for capital cost estimation. Analyses to date have adopted the target cost for solid oxide fuel cells (SOFCs) from the DOE-sponsored Solid State Energy Conversion Alliance, which is 400 $/kWe for the installed electrolysis plant (Reference [7-16] and [7-17]). For comparison, the factory cost for mass-produced SOFCs is an estimated 770 $/kWe today (Reference [7-18]). An evaluation of HTSE compared with conventional atmospheric alkaline electrolysis reported that HTSE would be approximately 40% to 100% higher in cost Reference [7-14]).

SI Rating: 7

The SI capital cost does not have the burden of large numbers of electrolytic cells. However, because of the number of unit operations, the high degree of thermal integration, and the stringent materials requirements due to the presence of both H_2SO_4 and HI, the capital cost may be comparable to HyS.

HyS Rating: 5

About half of the plant is identical to the SI process. The other half, however, consists of a large number of electrolysis cells. These are expensive and dominate the capital cost.

7.1.3.14 Hydrogen Product Cost

All three processes were evaluated using the same preliminary process and economic assumptions. The assumptions were as follows:

The efficiency of electrical generation: 41.5% overall reactor thermal to bus bar electrical

Use of an intermediate loop to transfer thermal energy from the primary loop to the water splitting process: 90% thermal efficiency

Capital charge of 11.5% per year

Thermal energy cost of $19/MWhr(t)

Electrical energy cost of $50/MWhr(e)

Annual maintenance cost of 5% of invested capital per year

Elimination of energy credits for items such as depressurization turbines which increase the overall efficiency of the process but are not realistic in an industrial installation.

The Results of this analysis are presented in Appendix A.

HTSE Rating: 3

An evaluation of HTSE compared to S-I, based on the 400 $/kWe target electrolysis plant cost, shows hydrogen cost for HTSE to be about 15% higher (Reference [7-10]). Operating cost has high uncertainty due to the large number of modular electrolysis units and to the complex layout of high-temperature piping and electrical connections. Performance degradation in experimental data to date and experience with conventional atmospheric alkaline electrolysis indicate the expected cell lifetime will probably be shorter than the design basis plant lifetime. As a result, there will be a continual program of electrolyzer renewal, which introduces significant maintenance cost.

SI Rating: 5

From the analysis described above, the SI and HyS processes will likely produce hydrogen for the same cost presuming the more efficient extractive distillation process is shown to be technically feasible and is incorporated into the flowsheet.

HyS Rating: 5 (default)

7.1.4 Matrix results

The scores for the three process alternatives were collected in tabular form and analyzed. These results were then reviewed by the same group of four process engineers to confirm the reasonableness of the results.

7.1.4.1 Full matrix results

The numerical ratings shown above imply a precision that did not exist in this analysis. To correct this, the results were translated into more qualitative scores. The scores were after all, based on the experience and judgment of the process engineers performing the analysis. The translation from numerical to qualitative indicators is as follows. The weighing factor was translated to qualitative importance as:

Table 7.1-1: Weighing Factor Translation

Weighing Factor	Importance
9-10	Highest
7-8	Very High
6	High
5	Medium
4	Low
2-3	Very Low
1	Lowest

The translation of quantitative to qualitative ratings was as follows:

Table 7.1-2: Ratings Translation

Criteria Score	Evaluation
9	Strong Positive
7	Positive
5	Neutral
3	Negative
1	Strong Negative

The results of this analysis are shown in Table 7.1-3. They indicate that the HyS and HTSE processes are about equal (both scores are 5.0) and the SI process is definitely less attractive (Score 3.4).

Table 7.1-3: Evaluation of Hydrogen Processes

Attribute	Importance	Assessment of Concepts					
		S-I		HyS		HTE	
		Evaluation	Score	Evaluation	Score	Evaluation	Score
Readiness							
NGNP R&D Requirements/Cost/Risk	Highest	Negative	27	Neutral	45	Positive	63
Vendor/Supplier Development	Medium	Negative	15	Neutral	25	Neutral	25
Regulatory Infrastructure Development	Lowest	Neutral	5	Neutral	5	Neutral	5
Process Design							
Process Complexity	Highest	Strong Negative	9	Neutral	45	Positive	63
Availability of Processing Consumables	Medium	Negative	15	Neutral	25	Neutral	25
Feedstock Processing Requirements	High	Neutral	30	Neutral	30	Neutral	30
Product / Waste Stream Processing Requirements	Very High	Negative	21	Neutral	35	Strong Positive	63
Safety, Health & Environmental Risk	Medium	Negative	15	Neutral	25	Neutral	25
Enhancement Potential							
Cost Enhancement Potential	Medium	Negative	15	Neutral	25	Neutral	25
Hydrogen Production Efficiency	Very Low	Negative	9	Neutral	15	Neutral	15
Performance							
Operability	Very High	Strong Negative	7	Neutral	35	Negative	21
Availability	Low	Neutral	20	Neutral	20	Neutral	20
Cost							
Plant Capital Cost	Very High	Positive	49	Neutral	35	Strong Negative	7
Hydrogen Product Cost	Highest	Neutral	45	Neutral	45	Negative	27
Score			282		410		414
Weighted Evaluation		3.4		5.0		5.0	

7.1.4.2 Re-evaluation of the Matrix Results

To evaluate the sensitivity of these results to different ratings for the processes, the rating for the SI (current score Negative) and HTSE (current score Positive) processes were changed in steps for the NGNP R&D requirements/Cost/Risk criterion (Highest Importance weighting) to see what the effect would be on the overall result. These results are shown below and indicate that there is about a 0.23 change in the score for each step in the rating for this criterion. This

means that there would have to be at least 7 increases in the highest weighed criteria for the SI process to score equally with the HyS and HTSE processes. Another calculation was made wherein 14 ratings were increased by one step. This changed the overall score from 3.4 to 5.3 for an average change of about 0.136 in total score for each step in the ratings. This indicates that about ratings in approximately 12 criteria would have to be increased one step to match the HyS or HTSE process score. These calculations indicate that the SI score is significantly lower than either the HyS or HTSE scores. Comparison of the HTSE with the HyS results indicates the same step sensitivity as with the SI process. This indicates that it would take a large number of changes to make either of these processes rate significantly differently than the other. Hence, it can be concluded that the two processes are about equal in merit. The matrix shown in the Summary and Conclusions section is a slightly different correlation of the same analysis, but normalized to a default score of 10.

7.1.5 Fit for NGNP Mission

Criteria that were judged to be crucial to the NGNP mission are shown in Table 7.1-4 below. These are criteria influencing the readiness of the technology for demonstration and the commercial feasibility of the technology.

Table 7.1-4: HTSE Compared with HyS for Demonstration Readiness and Commercialization Potential

	Weight	HTSE Rating	HTSE vs. HyS
NGNP R&D Requirements/Cost/Risk	9	7	Thermo and process chemistry fully established
Process Complexity	9	7	Key issue considering i) Fewer unit operations ii) Only catalyst on cells needed iii) No solid handling steps iv) Needs to be very integrated to achieve good thermal efficiency v) O_2, H_2 and H_2O (3 fewer than HyS)
Product / Waste Stream Processing Requirements	7	9	Condensation of water only
Operability	7	3	Heat integration makes operability difficult; High number of cells makes operation difficult
Plant Capital Cost	7	1	Capital cost probably much higher than HyS due to low current density and high cost of cells
Hydrogen Product Cost	9	3	Operating cost probably higher than HyS due to high cost of cells; IR losses in cells; high electrical power requirements

7.1.5.1 Schedule requirements

The proposed schedule for NGNP implementation is shown Section 18. Technology development can continue until at or near the beginning of the Preliminary Design phase. At that time a flowsheet must be established. The HTSE process could probably be implemented more quickly than the HyS process due to the availability of large scale tubular cell systems. Development of the HyS process is possible within the allotted time, but there is no allowance for delays in some critical aspects of the R&D effort.

7.1.5.2 Cost of final H_2 product

The final consideration is the commercial desirability of the processes after they have been demonstrated. Commercial considerations can be distilled down to two areas, the capital cost for the plant and the final product cost. The current capital cost estimates of the HTSE systems is higher than those for HyS process. This is due in large part to the high costs associated with the manufacture of the ceramic cells and the high temperature process connections. The high capital costs associated with the HTSE leads to a higher hydrogen product cost than for the HyS process.

7.1.6 Selection of Reference Technology

Based on this initial analysis, the Westinghouse team selected the HyS as the reference HPS process for the NGNP with HTSE as the backup technology. This selection was made because HTSE will likely have both higher capital and final hydrogen costs than will the HyS process. The NGNP program is aimed at a commercial demonstration of a hydrogen process and the HyS process is more likely to become a commercial process than the HTSE process. Both processes are recommended for consideration because the HTSE process has hardware that is already available while the HyS process still requires development work in both the sulfuric acid decomposition and the electrolysis cells. The HTSE process therefore presents a lower technological risk than does HyS.

The Westinghouse team recognizes that the low rating of the SI process is not consistent with commonly held views on water-splitting processes. The SI process has received much development attention to date due to a selection made in an earlier study. In this study, the HyS process (then known as the Westinghouse Process) was rated slightly higher than the SI process but was discarded due to the assumption that electrolysis-based processes could not be as economically competitive as an exclusively thermal process. Extensive process development work since then has shown that the SI process continues to have unresolved process issues and may have electrical costs as high as those of the HyS process while current estimates for the cost of the HyS process electrolyzers are about the same as those for traditional alkaline electrolysis running at half the H_2 production capacity.

7.2 GENERAL OVERVIEW

7.2.1 Functions and Requirements of the NGNP Hydrogen Production System

7.2.1.1 Functions of the NGNP Hydrogen Production System

The purpose of the NGNP Hydrogen Production System is to demonstrate the commercial production of hydrogen using water-splitting technology (in our case the Hybrid Sulfur or HyS process) with a high-temperature gas-cooled reactor (HTGR, in our case the Pebble-Bed Modular Reactor or PBMR) as a heat source. The plant therefore has the following two goals:

Produce hydrogen using the HyS process and a PBMR, safely, environmentally responsibly, and economically

Demonstrate these technologies on a commercial scale.

The first goal can be broken down into the following top-level functions:

1. Transport heat from SHTS to HPS
2. Produce hydrogen from water
3. Maintain and assure public and worker safety
4. Maintain control of radionuclides
5. Provide emergency preparedness
6. The following second level functions devolve from these:
7. Maintain the secondary heat transport fluid flow passage configuration
8. Maintain the secondary coolant pressure
9. Limit the secondary coolant leaks
10. Transport heat from the secondary heat transport fluid to the process
11. Conserve heat
12. Supply feed water to the process.
13. Supply electric power to the process.
14. Supply other utilities to the process.
15. Supply catalyst and chemicals to the process.
16. Contain the processes, products, and their associated chemicals.
17. Transport the reactants and non-reacting materials associated with them between the unit operations.
18. Carry out the decomposition of sulfuric acid into steam and sulfur trioxide.
19. Carry out the decomposition of sulfur trioxide into sulfur dioxide and oxygen.
20. Carry out the electrolysis of sulfur dioxide and water to sulfuric acid and hydrogen.
21. Recover heat in the process efficiently.

22. Dispose of waste heat that cannot be recovered in the process.
23. Purify oxygen to acceptable limits.
24. Purify hydrogen to meet the product specification.
25. Deliver the oxygen to the plant battery limits.
26. Deliver hydrogen to a pipeline at suitable conditions at plant battery limits.
27. Treat and dispose of waste materials so as to protect human health and the environment.
28. Control the processes carrying out these functions.

These functions will be discussed in more detail in the sections on the individual systems making up the Hydrogen Production System.

For commercial demonstration:

1. Demonstrate use of commercial materials of construction and component parts.
2. Demonstrate durability under commercial corrosion conditions.
3. Demonstrate transport phenomena at a scale large enough to give experienced engineers assurance of success in future designs.
4. Demonstrate effectiveness and life of commercially manufactured catalyst(s) under commercial operating conditions.
5. Demonstrate long-term operability, product capacity, and product purity and marketability using commercially available feedstocks.
6. Demonstrate safety, operability and effectiveness of interactions with upstream and downstream integrated units replicating a full-scale plant.
7. Demonstrate commercial maintenance and reliability goals.
8. Provide a basis for estimating equipment capital and plant operating costs for future plants.

These functions are fulfilled by engineering, procuring and constructing the plant according to commercial standards and operating it successfully over an extended period of time.

7.2.1.2 Requirements of the Hydrogen Production System

Produce Hydrogen

The functions impose certain requirements on the design of the Hydrogen Production System as a whole. As discussed in Special Study 20.7: *NGNP By-Products and Effluents Study*, (Reference [7-20]) the capacity of the demonstration unit will be based on a small commercial unit for the Sulfuric Acid Decomposer. The size selected is 50 MWth. This results in a plant hydrogen product capacity of approximately 7 million standard cubic feet per day (SCFD) or 0.2 kg/s. The oxygen capacity is clearly eight times the hydrogen capacity on a mass basis.

As was pointed out in the introduction, the use or final destination of the plant products is critical to determining the plant requirements. When a final decision is made on the use of the products, the delivery purity, temperature and pressure requirements can be set.

Splitting water with the HyS process may result in the presence of sulfur impurities in both product gases; more so in the oxygen than in the hydrogen. For most uses of both hydrogen and oxygen, the limit on the amount of sulfur allowed in the gas is quite low. The SAE J 2719 specification for hydrogen requires no more than 0.004μmol/mol (see Appendix B). In the case of oxygen, the requirement is currently set at 1 - 2 ppmv. This is considered adequate to allow either venting to atmosphere or use in many industrial settings. The hydrogen product may only be contaminated with water vapor while the oxygen stream will have several mole percent of steam and SO_2. For many large scale applications such as iron reduction and coal-based liquid fuels production, H_2 saturated with water vapor will not require cleanup. Oxygen saturated with water vapor and contaminated with a small amount of SO_2 will also not require cleanup for many applications. These less stringent requirements would be valid only for gases produced specifically for a particular use. Product gases marketed broadly have to meet more demanding specifications.

The delivery temperature and pressure of the hydrogen is not critical and will be close to that typical of delivery to a pipeline. The same is true of the oxygen delivery conditions.

Using the HyS Process and a PBMR

This aspect of the primary goals imposes several requirements on the design of the system. The heating medium provided by the PBMR SHTS is helium at approximately 900°C and 9MPa. This has an important impact on the design of the system and especially of the Sulfuric Acid Decomposition System and the materials chosen for construction.

In the HyS process, lower pressures and higher temperatures favor the reaction equilibria. Mechanical design considerations and required delivery conditions, on the other hand, favor higher operating pressures, and lower temperatures. Operating conditions for the Preconceptual Design have been selected without the benefit of detailed analysis and have not been optimized.

The HyS process also requires both electrical and thermal energy to split water. The combination of the PBMR required return temperature, the heat transfer medium circulation rate and the requirements of the sulfur trioxide decomposition reaction limits the fraction of thermal energy produced by the PBMR that can be used in the sulfuric acid decomposition step. In the current configuration, the amount of electrical energy that can be generated from the remaining heat exceeds the requirements of the electrolysis step. This would be true even if all 200 MWth were extracted from the SHTS heat transfer medium, rather than the 50 MWth planned for the NGNP prototype. In a commercial plant, this configuration can be adjusted. This optimization has not been performed, and it is premature until the requirements of an individually sited full-size commercial plant have been set. About 350 MWth (in the forms of both thermal and

electrical energy) of the 500 MWth generated by the PBMR can be used to split water in the HyS process, the rest is used to generate exported electricity.

The hybrid sulfur process is essentially a closed-loop process with respect to liquids. Water and possibly sulfuric acid enter as liquids and all products leave as gases. This means that any dissolved solids that either enter with the water or are collected as corrosion products will remain in the liquid and potentially foul or cause the deterioration of the electrolysis membranes, the Sulfuric Acid Decomposer heat transfer surfaces, or catalyst. Regardless of how pure the liquid feeds are, there will be some solids build-up. Hence a process blowdown is expected to be taken from the 50% sulfuric acid.

Safely

It is not anticipated that the design of the Hydrogen Production System will be subject to Nuclear Regulatory Commission (NRC) regulation and review. NRC review of the impact on the nuclear reactor of incidents occurring in the hydrogen plant is anticipated. Currently, the regulations and standards that apply to the Hydrogen Production System are the National Fire Protection Association (NFPA) electrical classifications and the Occupational Safety and Health Administration (OSHA) standard 29CFR1910.119, *Process safety management of highly hazardous chemicals*. The major elements of safety management as listed in the OSHA regulation are the material and energy balance, design codes and standards, the ventilation system, the pressure relief system, safety systems such as alarms and interlocks and the plant electrical classifications.

29CFR1910.119(e) requires that the owner of the chemical plant containing sufficient quantities of hazardous materials perform a Process Hazard Analysis (PHA). The extent, methodology and detail of this assessment depend upon the complexity of the process. In the design of a new facility of this kind, this PHA is generally carried out in stages. A brief assessment of hazards including a review of the Material Safety Data Sheets (MSDS) and the Process Flow Diagrams (PFDs) is performed during conceptual design. When Piping and Instrumentation Diagrams (P&IDs) are available, usually near the end of preliminary design, a "What-if," "checklist," or Hazard and Operability Study (HAZOPS) PHA is performed. For selected systems a Failure Mode and Effects Analysis (FMEA), or a fault-tree analysis may be performed. A final HAZOPS is frequently performed before startup.

Environmentally

At the minimum, an environmental assessment should be performed. This will aid in the preparation of local and state construction permits and will determine whether an Environmental Impact Statement is required.

Economically

Economic production of hydrogen and electricity will depend upon an efficient and cost-effective design of the Hydrogen Production System including capital and operating costs as well as reliable operation.

The efficiency now expected from the HyS process is 33.8% based on hydrogen LHV and a Rankine cycle efficiency of 33.9%. The plant must be designed so as to approach that efficiency. In the demonstration plant, the decision has been made to de-couple the hydrogen plant from the power conversion unit. This means that a large amount of heat that would otherwise be recovered as boiler feed water preheat will be rejected in an air-cooler. Nevertheless, the efficiency of the remainder of the system can be determined with proper instrumentation.

The Hydrogen Production System will be designed according to standards and practices typical in the chemical industry. Some examples of these are:

Overdesign or safety factors
Sparing policy
Design temperature and pressure determination
Equipment spacing
Overpressure relief
Use of advanced control
Use of SISs (safety instrumented systems) and SILs (safety integrity levels)
Vessel design code: ASME Sec VIII, Unfired Pressure vessels
Piping Design Code: ASME B31.3, Process Piping
TEMA (Tubular Exchanger Manufacturer's Association)
API (American Petroleum Institute)
ANSI (American National Standards Institute)
Quality practices such as in-shop inspection, weld inspection, etc.

Except for some additional monitoring instrumentation, no special provisions will be made other than those demanded by the process. Long-term successful operation of such a plant with reasonable maintenance and operating costs will fulfill the requirements of a commercial demonstration project. Design basis availability is usually set at 8000 hours per year (91.3%) until operating experience indicates a more precise number. Frequently, plant availability is higher. Lower availability is usually associated with batch processes and solid materials handling. So long as robust materials of construction can be found for handling the sulfuric acid at all the operating temperatures, the plant availability should exceed 8000 hours per year.

Construction requirements are described in more detail in sections 2 and 10. It should be noted however, that such parameters as soil bearing strength, seismic zone and maximum wind

speed and direction may be treated differently in the design of typical chemical plants than in that of nuclear plants.

7.2.1.3 Description of the Hydrogen Production System

The NGNP consists of the Nuclear Heat Supply System (NHSS), which in this discussion incorporates the Heat transport System (HTS), the Hydrogen Production System (HPS), the Power Conversion System (PCS) and Balance of Plant (BOP). The NHSS supplies thermal energy to both the HPS and the PCS. The PCS supplies electrical energy both for the HPS and to the grid through the BOP. The BOP consists of the plant general utility supply systems and other plant site needs. Their interaction is shown in the following block flow diagram (Figure 7.2-1). In a commercial plant, a stream of thermal energy resulting from the cooling of the decomposed sulfuric acid before it is returned to the electrolyzer would be sent as preheated boiler feed water to the PCS.

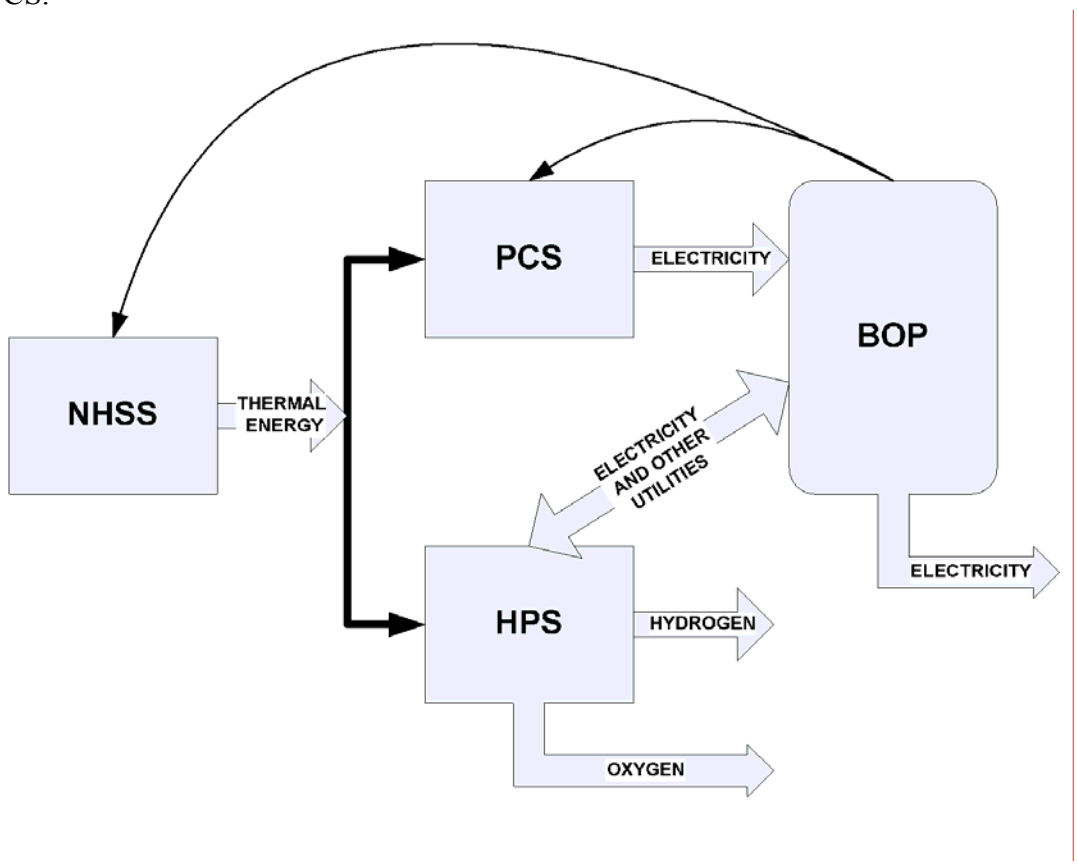

Figure 7.2-1: NGNP Systems Interfaces and Interactions

The basic chemistry and process flow of the HyS process is described in Section 7.1.1.2, above. A more detailed, Process Flow Diagram can be found in Appendix C.

The Hydrogen Production Facility consists of the HPS plus the accompanying buildings. The location of the Hydrogen Production Facility in the overall plot plan can be seen in NGNP-

03-DWG-002 Plot Plan, Section 10, Appendix A. The Hydrogen Production Facility consists of the following items on that drawing: #10: HPS Control Building; #11: HPS Electrical Building; #12: Sulfuric Acid Storage/ Receiving Area; #13: HPS Auxiliary Area; the Electrolyzer Building and all the equipment in it (unnumbered, just north of #12); #15: HPS Acid Decomposer Building; and #16: SOx Cooler. The HPS is divided functionally and spatially into two main processing areas. One part, consisting mostly of the Sulfuric Acid Decomposition System is located near the Nuclear Heat Supply Building. Five of the remaining systems are located at the north end of the plant. The systems are connected with two liquid pipelines and one gas pipeline. The liquid pipelines carry 50% sulfuric acid; the gas line carries a mixture of sulfur dioxide and oxygen. The control system serves all of these systems.

The Hydrogen Production System consists of seven sub-systems:

Feed and Utility Supply (FUS)
Sulfuric Acid Decomposition (SAD)
Electrolysis (ELE)
Product Purification (PPU)
Product Storage and Delivery (PSD)
Waste Treatment and Disposal (WTD)
Control and Instrumentation (PCN)

7.2.1.4 Major Interfaces of the Hydrogen Production System

System Limits and Interfaces

The interface of the HPS with the NHSS is defined by the helium inlets and outlets on the Process-Coupling Heat Exchanger (PCHX) or Decomposer. The PCHX is therefore completely within the HPS. The SAD currently interfaces with the environment through an air-cooled heat exchanger that removes excess heat from the decomposed acid stream. In commercial units this heat will be recovered and the interface will be with the PCS. The FUS accepts all the utilities including electricity and feed water from the BOP and distributes them within the HPS. FUS also interfaces with BOP for deliveries of sulfuric acid, caustic for neutralizing wastes, and adsorbents and catalysts used to purify the product gases. PSD interfaces with a hydrogen pipeline assumed to be available close to the plant. It may also interface with oxygen users if these can be found. WTD interfaces with BOP for waste water disposal and for removal of solid wastes. It also interfaces with the environment if oxygen is vented. Every sub-system in the HPS interfaces with the environment and with the workers who operate and maintain it. The PCN interfaces with the overall plant supervisory control system.

Environmental Interface

The Hydrogen Production System will generate a variety of waste streams. If oxygen is vented rather than sold, the oxygen will be a large waste stream. The PPU will have to purify the oxygen so that it will meet emissions standards. Liquid wastes include scrubber water from oxygen scrubbing and process blowdown, and these will have to be neutralized and disposed of properly from WTD. Evaporation and landfill of the neutral salts should be considered. Solid wastes will be generated as a result of operations these include spent catalysts, worn or fouled electrolyzer membranes, broken Sulfuric Acid Decomposer tubes, and spent adsorbents. Catalysts and some adsorbents can be returned to the manufacturer for reclamation of precious metals, regeneration, and recycling. Other wastes will have to be land filled or disposed of in another responsible manner. Decommissioning will require handling and disposal of the same or similar materials, but in much larger quantities. Waste streams and their treatment were treated in detail in Special Study 20.7: *NGNP By-Products and Effluents Study* (Reference [7-20]).

Interface with Workers and the Public

The danger of explosions due to combustion of gaseous hydrogen is usually associated with hydrogen that is in a confined space and has been mixed with oxygen. It is therefore required that all equipment be thoroughly purged with inert gas before beginning operations and then again before being purged with air prior to vessel entry. High pressure hydrogen leaks in unconfined spaces whether ignited or not can cause serious injury to personnel and damage to insulation and equipment, but generally do not pose a threat of explosion. Hydrogen is very much less dense than air and disperses rapidly. It does not form explosive clouds in unconfined areas as do many hydrocarbon vapors. To prevent the ignition of hydrogen in confined spaces that are subject to leaks such as instrument and electrical enclosures, all electrical equipment in areas in which hydrogen is present in piping or equipment must conform to NFPA Class 1, Div1, requirements.

Other potential hazards that must be considered during future design phases are the possibility of hot oxygen, SO_2, SO_3 and sulfuric acid vapor leaks. Hot oxygen presents a serious fire hazard. Many substances that will not burn in air will burn vigorously in a stream of hot oxygen. The sulfur-containing gases are much denser than air and can form dangerous clouds, especially in confined spaces. The plant contains large amounts of liquid sulfuric acid in a range of concentrations. All of these liquids are dangerous if spilled. In future design phases attention must be paid to prevention and handling of spills.

7.2.1.5 System Operation of the Hydrogen Production Unit

These systems interact amongst themselves as is shown in the following block flow diagram (Figure 7.2-2). FUS supplies purified feed water and electricity to the Electrolysis System (ELE) and make-up sulfuric acid to the Sulfuric Acid Decomposition System (SAD). Wastes generated in purifying the feeds are sent to WTD. ELE sends 50% sulfuric acid to SAD where it is concentrated and decomposed using heat from the NHSS. The product oxygen and

sulfur dioxide along with unreacted sulfuric acid are returned to ELE where most of the sulfur dioxide is removed from the oxygen. The oxygen, containing about 5.2 wt% sulfur dioxide is sent to PPU. The ELE also electrolyzes the solution of sulfur dioxide and water thereby regenerating sulfuric acid and generating hydrogen. The hydrogen is sent separate from the oxygen to a different part of the PPU. The regenerated sulfuric acid is returned to SAD. Process blowdown taken from SAD is sent to WTD. Hydrogen purified in PPU is sent to PSD for delivery to off-site users. Oxygen purified in PPU is vented, or if marketable, to PSD to shipment to off-site users. Wastes generated in PPU are sent to WTD for neutralization and proper disposal. The PCN controls the operation of these systems and their dynamic interfacing requirements.

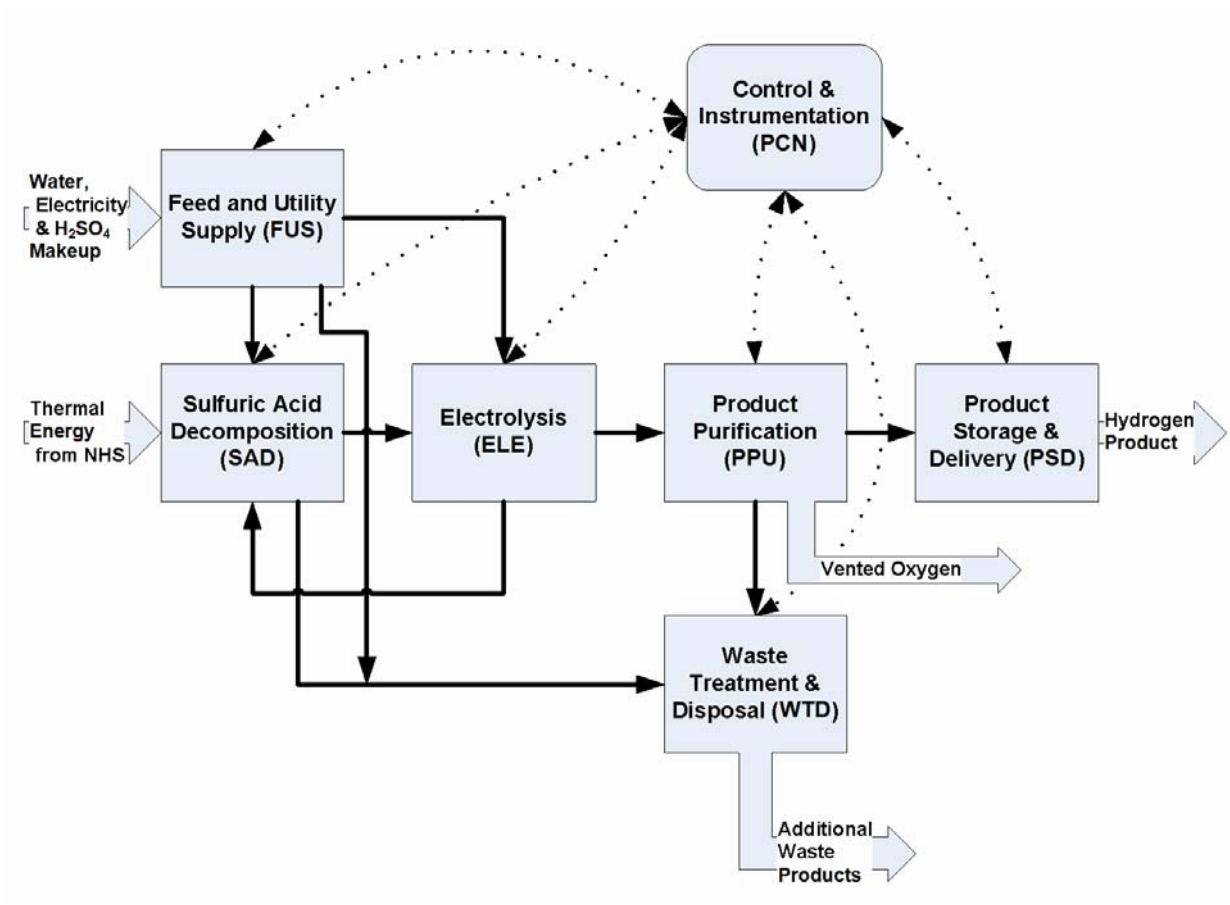

Figure 7.2-2: HPS Sub-System Interactions and Interfaces

7.3 HYDROGEN PRODUCTION SYSTEMS

7.3.1 Feed and Utility Supply System

7.3.1.1 Feed and Utility Supply System Functions and Requirements

7.3.1.1.1 Functions

The functions of this system are as follows:

Supply feedwater of the required purity
Supply adequate power for electrolysis and to drive the rotating equipment, lighting, electric tracing, if any, and the control system
Supply necessary steam, inert gas, instrument air, cooling water to the other systems
Supply the required catalysts and chemicals to the other systems

During the Preconceptual Design phase only the first of these functions was considered in detail. The remaining functions will require further treatment in the Conceptual or Preliminary Design phase. The function of the ultra-pure feedwater system is to supply low conductivity water for the Product Purification System and ultra-pure water for the process to minimize contamination and deposition in the acid loop.

7.3.1.1.2 Requirements

Most of the requirements of this system have not yet been determined. Below is a list of requirements that will have to be specified and the design phase during which they are expected to first be addressed.

Feedwater
- Quantity
  - ELE feed: 7.0 m^3/h
  - PPU Scrub tower make-up: 3.9 m^3/h
- Purity (Conceptual Design)

Power
- Voltage (Conceptual or Preliminary Design)
- Electrolysis: 13.0 MWe
- Rotating Equipment: 0.8 MWe
- Lighting, Tracing, Control system (Final Design)
- Area classifications (Preliminary Design)

Steam (Conceptual Design)
- Pressure
- Quantity

Inert gas (Conceptual Design)
Instrument air (Preliminary Design)
Cooling water 480 m^3/h
Other (Final Design)

Catalysts (Preliminary Design)
- Decomposition catalyst
- Safety and handling requirements

Chemicals
- Sulfuric Acid make-up (or sulfur dioxide): 950 kg/h (as 50% H_2SO_4)
  - Purity (Conceptual Design)
- Caustic for product scrubbing: 775 kg/h (as 50% NaOH)
- Product purification adsorbents (Preliminary Design)
- Ion exchange resin (Conceptual Design)
- Ion exchange regenerants (Final Design)
- Other (Final Design)

Corrosion Resistance
Maintenance requirements

Safety requirements
- OSHA and other safety and environmental requirements (Conceptual Design)

The water quality requirements of the Hybrid Sulfur process are unknown at this time. This pre-conceptual study assumes that the water quality needed will be consistent with the Semiconductor and Super Critical Power Industry Water Quality requirements.

The typical values are shown in the following table.

Table 7.3-1: Typical Specifications of Ultra Pure Water

PARAMETER	UNITS	Guaranteed Values	Expected Values
Resistivity at 25°C	Mega Ohm / cm	> 18.2	>18.2
Silica (total)	ppb SiO2	< 0.1	< 0.1
Total Organic Carbon	ppb	< 1.0	< 0.3
Dissolved Oxygen	ppb O2	< 1.0	< 1.0
Particles > 0.05 micrometers	Number per liter	< 200	< 100
Critical Cations and Anions	ppt	< 5.0	< 1.0
Microorganisms	Cfu/l	0	0

Water Supply

The assumed water supply for all the water systems at the facility is the Snake River Plain Basalt Aquifer. The water is pumped from wells by the BOP Plant Water System and supplied to the HPS at the interface boundary connection. See data for the water quality in Table 9-1.

7.3.1.2 Feed and Utility Supply Description

The Feed and Utility Supply System (FUS) includes a variety of subsystems that provide utilities and purified feed and chemicals to the other systems that make up the HPS. It includes all the equipment listed in Appendix D. The FUS includes a water purification system, caustic and sulfuric acid supply facilities, area cooling water and electrical power distribution, inert gas supply, and any other utilities or chemicals supply needed for the operation of the HPS. This system is located primarily in the two areas north and south of the electrolyzer building, as can be seen in the Plot Plan (NGNP-13-DWG-002, Section 10, Appendix A). Parts of the system are located throughout the HPS. The FUS may include an SO_2 recovery and recycle system, if in the future that is considered to be practical. The only parts of the system treated in any detail in this report are the feed and scrubber make-up systems.

7.3.1.2.1 Ultra Pure Water System

The Feedwater purification system is designed as two by 100% capacity trains capable of producing 31gpm of ultra-pure water from each of the two trains. The systems will be designed to cross over from the “A” to the “B” train at almost any point in the entire operation. This will ensure that the loss of one piece of the system does not prevent the remainder from being used if needed. In each train multimedia filtration is used to remove insoluble material greater than 1000 angstroms in size. Activated carbon filtration is then used to remove free chlorine and organic material from the water to prevent damage to the reverse osmosis membranes. An electric heater brings the water supply up to 18°C to improve the performance of the reverse osmosis units. Anti-scalant is then added in proportion to the water system flow rate to reduce the tendency of the water to scale on concentrated area of the reverse osmosis units. A reverse osmosis, two-pass system is used to remove all material in the water, soluble or insoluble, above 1 angstrom in size. Each pass of the reverse osmosis Unit will provide 95% removal efficiency and 75% water recovery. A membrane degasser unit is added to remove and dissolved gasses in the water such as CO_2. Electro-deionization is a self regenerating resin bed to remove material which was not removed in the two-pass reverse osmosis system. Off-site regenerated mixed bed demineralizer containers will be placed as the final unit in the stream for removing any possible remaining contamination in the water. These units can also be used in a continuous loop from the storage tank to maintain purity in the storage tanks. The ultra-pure water will be stored in fiberglass reinforced plastic tanks. There will be one tank dedicated to each polishing unit. Each tank will store an eight-hour supply of water.

7.3.1.2.2 Oxygen Scrubber Makeup Supply

The Product Purification System uses a sodium hydroxide solution to purify the oxygen product. The sodium hydroxide solution requires water to mix with the sodium hydroxide. The water quality must be high to minimize any contamination and corrosion in the scrubber system.

The water is supplied by the ultra-pure water system after the second reverse osmosis unit. At that point there is a storage tank of nearly pure water that can supply the needs of the scrubber system.

7.3.1.3 Feed and Utility Supply System Major Interfaces

Balance of Plant (BOP): The BOP supplies 11.6 m^3/h of well water to the HPS facility for use as the HPS FUS ultra-pure water system feed. The BOP also supplies about 500 m^3/h of cooling water which is distributed by the FUS among the cooling water exchangers in the HPS. The BOP Plant Electrical Distribution System supplies 13 MWe of DC electric power at TBD volts for the electrolyzers and TBD MWe AC electric power at TBD volts for other HPS electric power.

Electrolysis System (ELE): The FUS supplies ultra-pure water at 7.0 m^3/h to the ELE at the top of the Stage 1 SO_2 Absorber (HPS-ELE-AS-302). It also supplies cooling water for the coolers and power for the electrolyzers and pumps. Inert gas is supplied for purging equipment prior to shutdown and startup.

Product Purification System (PPU): The FUS supplies pure water to the SO_2 Scrub Tower (HPS-PPU-AS-401).

7.3.1.4 Feed and Utility Supply System Operation

The Ultra Pure Water treatment System is a fully automated system with complete redundancy. The operating parameters need to be monitored to verify the performance of the system. Periodic grab sampling of the water at various points is required to verify the instrumentation and control of the system. The backup system needs to be run periodically to minimize any bacteria growth on the membranes.

All systems need to be flushed prior to placing them in service. A recirculation line should be included from the ultra-pure product tank to the filtered water tank for recirculating a system on startup. Recirculating the stored pure water through the mixed bed units will continually control the purity of the system.

7.3.2 Sulfuric Acid Decomposition System

7.3.2.1 Sulfuric Acid Decomposition System Functions and Requirements

Functions

- The functions of this system are as follows:
- Transfer heat from the Nuclear Heat Supply System (NHSS) that is transported via the Secondary Heat Transfer System (SHTS) heat transfer medium to the process.
- Contain the processes and their associated chemicals.
- Transport the reactants and non-reacting materials associated with them between the unit operations.
- Carry out the decomposition of sulfuric acid into water and sulfur trioxide.
- Carry out the decomposition of sulfur trioxide into sulfur dioxide and oxygen.
- Recover heat in the process efficiently.
- Dispose of waste heat that cannot be recovered in the process.

In addition, the following second-order functions are necessary to maintain plant operation:

- Provide buffer capacity for sulfuric acid.
- Provide adequate sulfuric acid storage such that equipment can be drained for maintenance.
- Pump sulfuric acid from operating pressure of acid storage (slightly above atmospheric) to the decomposer operating pressure.
- Preheat the sulfuric acid prior to concentration.
- Concentrate sulfuric acid to the concentration required by the decomposer.
- Recover heat from the hot gases leaving the decomposer.
- Cool the high temperature product gases from the decomposer down to the lower operating temperature required by the Electrolysis System.
- Depressurize products from the high pressure of decomposer operation to lower operating pressure of the Electrolyzer System.
- Depressurize and cool recycle acid from Electrolysis to storage conditions.
- Cool and recover oxygen flashed from the recycle acid.

Requirements

The top-level requirements for this system are as follows:

- Transfer heat from the secondary heat transport fluid (helium at approximately 900 °C and 9MPa) to the process fluids at a maximum temperature of no less than 850°C and about 9MPa).

- Take sulfuric acid at about 50 weight % concentration and ambient conditions and feed it to the Concentrator at about 9MPa.
- Concentrate the feed sulfuric acid to about 85 to 93 weight % concentration before feeding it to the Decomposer
- Carry out the decomposition of sulfuric acid to water and SO3 at a conversion of approximately 100% and carry out the decomposition of SO3 to SO2 and oxygen at a conversion of about 50%.
- Cool the decomposition reactor effluent to about 70°C, lower the pressure to about 4 MPa and deliver the stream to the ELE.

Additional requirements for this system are specified in the process flow diagrams, heat and material balance, and the sized equipment list. See Appendix E. These requirements will be refined and further requirements will be generated at a later stage in the design. Some of these are as follows:

- Corrosion resistance (Conceptual Design)
- Maintenance requirements (Preliminary Design)
- Safety requirements (Conceptual Design)
- Environmental requirements (Conceptual Design)

7.3.2.2 Sulfuric Acid Decomposition System Description

The Sulfuric Acid Decomposition System (SAD) consists of the Sulfuric Acid Decomposer (HPS-SAD-MR-201), the Sulfuric Acid Concentrator (HPS-SAD-AS-201), the Sulfuric Acid Concentrator Recuperator (HPS-SAD-TT-201), and the associated equipment shown on process flow diagrams NGNP-13-DWG-002-1&2. Sizes and basic requirements for each of these pieces of equipment are given in the accompanying equipment list in Appendix E. In general, the equipment on Sheet 1 of the process flow diagram is located just south of the Electrolyzer Building and the equipment on Sheet 2 is located in or near the PCHX Decomposer Area (#15 on Plot Plan NGNP-03-DWG-002, Section 10, Appendix A). Number 45 on this plot plan is the SOx Air Cooler, (HPS-SAD-TA-202). There is no hydrogen in the equipment or piping in the vicinity of the NHSS. There is, however, hot oxygen, sulfur dioxide and sulfuric acid.

7.3.2.2.1 Concentrator

To achieve reasonable thermal efficiency in the system, it is necessary to concentrate the sulfuric acid from 50 weight percent in the Sulfuric Acid Storage Tank to about 85 to 93 weight percent for feed to the Decomposer. Excess water is vaporized by contacting the dilute acid countercurrently with the hot product vapors leaving the Decomposer. This is achieved in the Concentrator.

The preliminary concept for the Concentrator (shown in Figure 7.3-1) is conceived as a two-shell device. The inner shell is designed to withstand the corrosive effects of the concentrating sulfuric acid stream. It consists of an IN-617 shell (or similar material) with

alumina packing material. The outer shell is made of carbon steel and acts as the pressure boundary for the system. In order to keep its temperature at 260°C or below, the space between the inner and outer vessels is filled with an insulating material with a thickness of about 1 foot. The inner shell is supported on bars that span the space between the inner and outer vessels. These bars rest on insulated pads that in turn rest on shelves welded to the outer vessel.

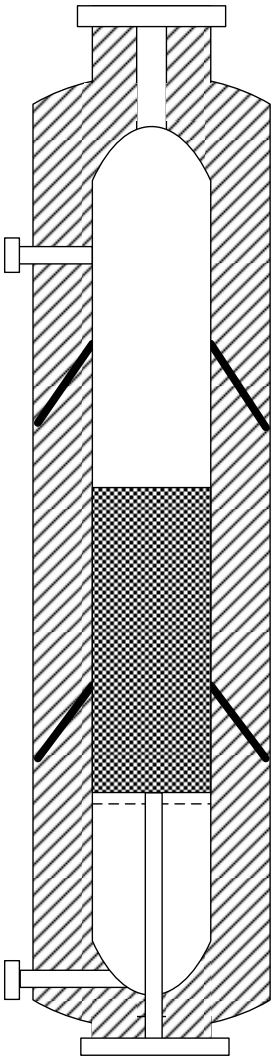

Concentrator (AS-201)		
Inner vessel ID	5	ft
Inner vessel Height	30	ft
Inner Vessel Wall Thickness	0.5	inch
Inner vessel material	Inconel 617	
Estimated Weight	12,806	lbs
Packing	Al2O3 1/2 inch Saddles	
Packing Height	13.12	ft
Packing Density	100	lb/ft3
Packing Weight	24,931	lbs
Number of Support Beams	40	
Support Beam Length	1.4	ft
Support Beam Diameter	1	inch
Support Beam Material	Inconel 617	
Support Beams Total Weight	1,559	lb
Insulation	Al2O3	
Insulation Thickness	1	ft
Insulation Density	70	lb/ft3
Insulation Weight	43,675	lb
Outer vessel ID	7	ft
Outer Vessel Height	32	ft
Pressure Rating of Outer Vessel	10	MPa
Wall Temperature of Outer Vessel	200	°C
Outer Vessel Material	Carbon Steel	

Figure 7.3-1: Preliminary Concept for the Concentrator

7.3.2.2.2 Decomposer

The various concepts that have been proposed for the Decomposer are summarized in the Special Study 20.7: *NGNP By-Products and Effluents Study* (Reference [7-20]). The concept selected for the NGNP Preconceptual Design is a variation of the Westinghouse concept described in that report.

The Decomposer must handle a feed of concentrated sulfuric acid at about 500°C with a gas stream of a mixture of decomposed sulfuric acid (steam and SO_2) and un-decomposed SO_3 and H_2SO_4. The parts of the vessel in contact with the lower temperature liquid feed and the high temperature gas phase portion of the decomposition reactor are made from IN617. The parts of the vessel where the liquid sulfuric acid is vaporized and decomposed are made from silicon carbide. A schematic of this vessel is shown in Figure 7.3-2. The reference catalyst is platinum on a supporting material of alumina or zirconia. Note, however, that there is some work underway based on the use of Fe_2O_3 which would be less costly and more robust than the platinum-based catalyst. The outer vessel is made of carbon steel and acts as the pressure boundary for the system. To keep the wall temperature at 260°C or below, the shell is lined with an insulating material with a thickness of about 1 foot. Each tube is compressed against the tubesheet for sealing by an individual IN617 spring.

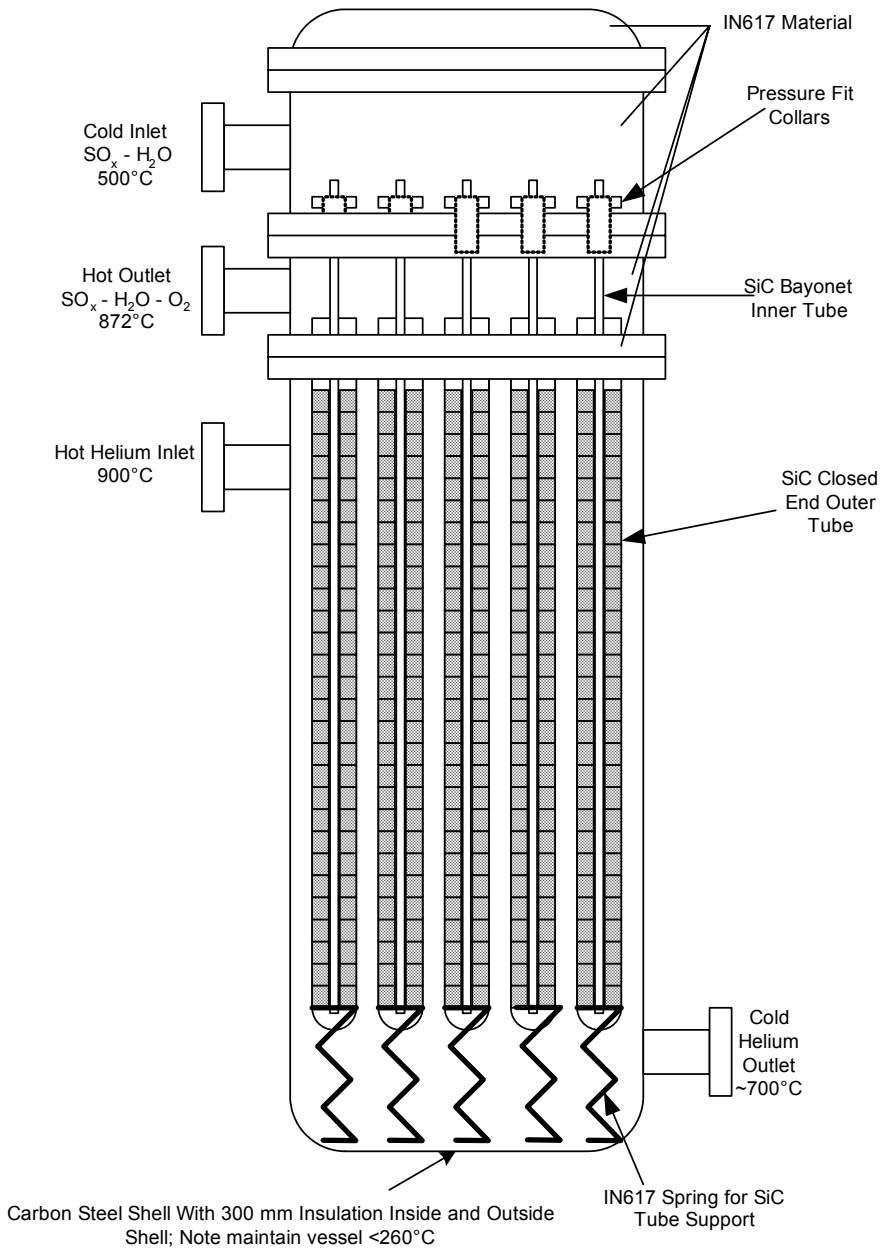

Figure 7.3-2: Preliminary Concept for the Decomposer

7.3.2.3 Sulfuric Acid Decomposition System Major Interfaces

The Sulfuric Acid Decomposition System interfaces with the other systems as follows:

- The Sulfuric Acid Decomposition System receives sulfuric acid from the Electrolysis System, which is then stored in the H2SO4 Storage Tank.

- Make-up sulfuric acid from the Feed and Utility Supply System is fed to the H2SO4 Storage Tank.
- The Sulfuric Acid Decomposition System returns a mixture of water, sulfur dioxide and produced oxygen to the Electrolysis System.
- Heat is supplied to the Decomposer by the NHSS through the SHTS secondary heat transport medium, helium.
- The Feed and Utility Supply System provides cooling water, electricity, and instrument air during normal operation and, as required, inert gas and steam.
- The Waste Treatment and Disposal System accepts blowdown from the acid loop as well as liquid releases and spills during normal operation, upset conditions, startup, and shutdown.
- The Sulfuric Acid Decomposition System rejects heat to the atmosphere through the SOx Cooler and a minor oxygen vent from the H2SO4 Storage Tank.

7.3.2.4 Sulfuric Acid Decomposition System Operation

7.3.2.4.1 Steady State Process Description

The Sulfuric Acid Decomposition System thermally decomposes vaporized sulfuric acid (H_2SO_4), generated in the Electrolysis System. The thermal decomposition reaction generates water (H_2O), sulfur dioxide (SO_2) and oxygen (O_2), which are all gases at the decomposition operating temperature. These decomposition reaction products go to the Electrolysis System for the recovery of oxygen; generation of hydrogen; and regeneration of sulfuric acid for recycle. The acid decomposition reaction is as follows:

$$H_2SO_4 + \text{heat} \rightarrow H_2O + SO_2 + 0.5\ O_2$$

The heat for decomposition is provided by helium from the SHTS. The process flow diagram (PFD) can be found in Appendix E. Concentration and decomposition operates between 500 and 900°C at around 9 MPa.

Sulfuric acid at about 50 weight percent concentration is pumped by the Sulfuric Acid Transfer Pump (HPS-SAD-PP-218) from the Sulfuric Acid Storage Tank (HPS-SAD-MT-215) at relatively low pressure to the Sulfuric Acid Decomposer Feed Drum, located near the Concentrator and Decomposer. The sulfuric acid feed is then delivered to the Sulfuric Acid Concentrator Recuperator (HPS-SAD-TT-201, Recuperator) at about 8.8 MPa and 38°C. This sulfuric acid feed is preheated from 38°C to 202°C in the Recuperator before being fed to the Concentrator (HPS-SAD-AS-201).

The Concentrator increases the inlet sulfuric acid concentration from approximately 50 percent to over 80 percent (84.4 to 93%). The concentrated acid at 524°C feeds the Sulfuric Acid Decomposer (HPS-SAD-MR-201, Decomposer). The Decomposer provides the heat to vaporize the liquid feed and to decompose approximately half of the incoming sulfuric acid (Reaction 1). The high temperature (872°C) gas product is directly cooled in the Concentrator by direct contact

with incoming feed acid and strips water from the feed. The Concentrator gas effluent contains sulfur dioxide, oxygen and water from sulfuric acid decomposition and the water from acid concentration. It is cooled from 333°C to 279°C in the Recuperator and flows directly to the SOx Air Cooler (HPS-SAD-TA-202) where it is further cooled to 72°C and partially condensed. The cooled mixed-phase stream is separated into vapor and liquid streams in the SOx V/L Separator (HPS-SAD-MS-222) and each stream is depressurized and delivered separately to the Electrolysis System. The gaseous portion of this stream flows to the bottom of the Stage 5 Sulfur Dioxide Absorber (HPS-ELE-AS-306), while the liquid is fed to the Stage 5 Absorber Surge Drum (HPS-ELE-MS-304).

Anolyte liquid from the Stage 5 Electrolyzers, essentially 50 percent sulfuric acid saturated with oxygen, is flashed from the 4 MPa operating pressure of the electrolyzers to about 0.5 MPa to release dissolved oxygen. The gas and liquid are separated in the Sulfuric Acid Flash Drum (HPS-SAD-MS-202). The liquid is cooled to storage temperature in the Sulfuric Acid Recycle Cooler (HPS-SAD-TT-214) and part of the recycle acid is withdrawn as blowdown and sent to the Waste Treatment and Disposal System for neutralization and disposal. Flashed oxygen is cooled in the Oxygen Cooler (HPS-SAD-TT-213), compressed to the oxygen delivery pressure and sent with the oxygen stream from the Electrolysis System to the Product Purification System for clean-up.

Makeup sulfuric acid for the Sulfuric Acid Decomposition System is added to the Sulfuric Acid Storage Tank (HPS-SAD-MT-215) by the Sulfuric Acid Make-up Drum (HPS-FUS-MS-116) and the Sulfuric Acid Make-up Pump (HPS-FUS-PP-106). The make-up tank receives acid deliveries and operates at near atmospheric pressure and about 30°C.

7.3.2.4.2 Non-Steady State Operation

During the Preconceptual Design Phase little or no consideration has been given to non-steady state operation. Starting and shutting down this plant will be considerably more difficult than most chemical plants due to the fact that the plant is essentially a large recycle loop. No provisions have been made for the control of the operation of the Concentrator and Decomposer because of the demanding service conditions of this equipment. It is therefore not a feasible strategy to over design the equipment and reach a satisfactory operating point through control. An important task during Conceptual Design will be to examine the sensitivity of this system to upsets in steady state operating conditions.

7.3.3 Electrolysis System

7.3.3.1 Electrolysis System Functions and Requirements

Functions

The primary functions of this system are as follows:

- Recover sulfur dioxide and water from the oxygen stream generated in the Sulfuric Acid Decomposition System.
- Electrolyze sulfur dioxide and water provided by the Sulfuric Acid Decomposition System into hydrogen and sulfuric acid.
- Deliver produced hydrogen to the Product Purification System.
- Deliver oxygen to the product Oxygen Purification System.
- Deliver sulfuric acid to the Sulfuric Acid Decomposition System.
- Contain the processes and their associated chemicals.

In addition, the following second-order functions are necessary to maintain plant operation:

- Maintain the proper operating temperatures, pressures, and concentrations in the Electrolyzers.
- Maintain the proper operating temperatures, pressures and concentrations in the Absorbers
- Maintain electrolyte circulation.
- Remove suspended solids from the circulating electrolyte.

Requirements

The top-level requirements for this system are as follows:

- Deliver about 0.2 kg/s of hydrogen at approximately 4 MPa and about 70°C and with a concentration of sulfur species of not more than 100 ppmv.
- Deliver about 1.6 kg/s of oxygen at approximately 3.9 MPa and 35°C and not more than 5.3 weight percent Sulfur dioxide content.
- Return sulfuric acid to the SAD at about 50 weight percent concentration and with essentially no dissolved sulfur dioxide.

Additional requirements for this system are specified in the process flow diagrams, heat and material balance, and the sized equipment list. See Appendix F. These requirements will be refined and further requirements will be generated at a later stage in the design. Some of these are as follows:

- Voltage and current density (Conceptual Design)
- Membrane permeability and selectivity (Conceptual Design)

- Corrosion resistance (Conceptual Design)
- Maintenance requirements (Preliminary Design)
- Safety requirements (Conceptual Design)
- Environmental Requirements (Conceptual Design)

7.3.3.2 Electrolysis System Description

The Electrolysis System (ELE) consists of a set of sulfur dioxide absorbers followed by a set of electrolyzers. The absorbers are ordinary packed towers that scrub sulfur dioxide from the gases from the Sulfuric Acid Decomposition System (SAD) with water and sulfuric acid. The electrolyzers cause the dissolved sulfur dioxide and water to react to sulfuric acid and hydrogen thus reducing the concentration of dissolved sulfur dioxide in the liquid. In the NGNP Preconceptual Design there are five stages of absorbers (HPS-ELE-AS-302, 303, 304,305 & 306) alternating with five stages of electrolysis (HPS-ELE-GY-301, 302, 303, 304 & 305). Each stage of electrolyzers is made up of multiple units. The number of electrolyzer units per stage is as follows:

Stage 1:	2 units
Stage 2:	2 units
Stage 3:	3 units
Stage 4:	3 units
Stage 5	20 units (including 3 spares which serve all five stages)

The absorbers and electrolyzers are accompanied by the necessary pumps, electrolyte reservoirs, heat exchangers and filters. These serve to move the electrolyte, remove any suspended scale or corrosion products, and maintain the correct operating temperature. The Electrolysis System is located in a building near the north end of the plant (See NGNP-03-DWG-002, Plot Plan, Section 10, Appendix A). The system and the building constitute the Electrolyzer Facility. The layout of the facility is shown in NGNP-13-DWG-002, Section 10, Appendix A.

7.3.3.2.1 Electrolyzer

The HyS process uses a sulfur dioxide depolarized anode to dramatically reduce the voltage required to split water. The process feeds the cathodes a catholyte of a solution of sulfuric acid and water and the anodes an anolyte that is a solution of sulfuric acid, water, and dissolved sulfur dioxide. Sulfur dioxide is oxidized at the anode to produce sulfuric acid and hydronium ions (protons). The outlet anolyte stream has a higher concentration of sulfuric acid than the inlet anolyte stream. The protons produced at the anode transport as hydronium ions across the cation-exchange membrane into the catholyte and are reduced at the cathode to produce hydrogen gas. The reactions that constitute this process are as follows:

Anode reaction: $SO_2\,(aq) + 2H_2O\,(aq) \leftrightarrow H_2SO_4\,(aq) + 2H^+\,(aq) + 2e^-$

Cathode reaction: $2H^+\,(aq) + 2e^- \rightarrow H_2\,(g)$

Overall reaction: $SO_2\,(aq) + 2H_2O\,(aq) \rightarrow H_2SO_4 + H_2\,(g)$

Figure 7.3-3 depicts a parallel plate single cell electrochemical reactor and the reaction chemistry that occurs at each electrode.

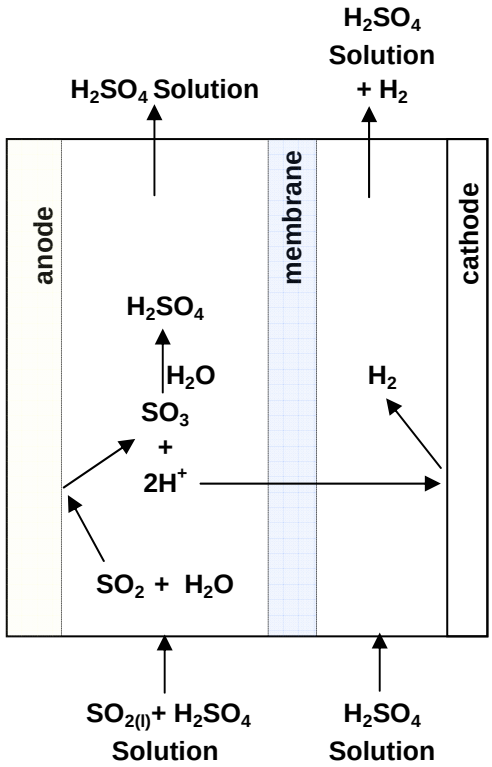

Figure 7.3-3: Schematic of HyS Electrolysis Reaction

Experimental work is currently being carried out by the Savannah River National Laboratory (SRNL) (Reference [7-21]). They are using a test cell similar to the one shown in Figure 7.3-4. The parameters under which this test cell is run are shown in Table 7.3-2. Note that these values are somewhat different than those used as the basis for the Preconceptual Design.

Table 7.3-2: Electrolysis Test Parameters and Design Data

	Calculated Electrolysis Voltage*	Electrolysis Temperature (°C)	Actual Elec. Power (MW)		Sulfuric Acid Concentration (%)		Hydrogen Prod. (Kg/s)	
	1 or 4 Loops	1 or 4 Loops	1 Loop	4 Loops	Inlet	Outlet	1 Loop	4 Loops
Stage 1	0.51	43.7	2.2	8.8	0.0	25.8	0.05	0.2
Stage 2	0.51	60.1	7.1	28.4	20.4	53.7	0.07	0.29
Stage 3	0.83	66.9	5.8	23.2	42.5	73.9	0.08	0.32
Stage 4	0.80	64.5	6.3	25.2	61.9	87.3	0.08	0.33
Stage 5	0.99	90.0	23.9	95.6	17.8	50.0	0.51	2.04

*Includes overvoltage

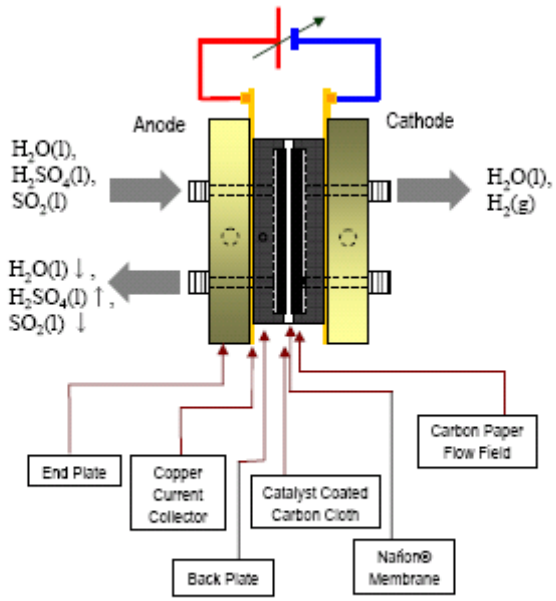

Adapted from JW Weidner, *Intl. J. Hydrogen Energy*, 2005.

Figure 7.3-4: SRNL Test Cell Schematic

The Preconceptual Design electrolyzer concept is based on current commercial designs. Each electrolyzer unit is made up of two stacks of cells with forty cells per stack. Each cell has an active surface area of about 1.78 square meter (a square cell that fits into a vessel with an internal diameter of 2 meters). A unit therefore contains eighty cells and 142 square meters of electrode surface area. Each cell is a unit comprised of an anode in an anode compartment; a cathode in a cathode compartment; and a membrane separating the two compartments. There is a sealing system between the anode and cathode compartments that prevents communication between the two, other than through the membrane.

Each cell contains a feed pipe that distributes the feed anolyte across the anode compartment and feed catholyte across the cathode compartment so that they it flow uniformly across the face of the anode and cathode, respectively. Figure 7.3-5 shows a conceptual arrangement for a HyS monopolar cell. Both compartments are liquid flooded at all times. Hydrogen generated at the cathode flows with the catholyte and is collected in a cathode channel that exits the unit. The sulfuric acid leaves the cell with the anolyte.

Direct current flows between the anode and cathode pairs through the sulfuric acid solution. The electrolyzers may be either a monopolar or bipolar design. Cell arrangement optimization has not been carried out. The final cell design and current and voltage requirements will depend on the outcome of that optimization. The Preconceptual Design assumes a bipolar design with each stack requiring about 8800 amps with a voltage drop of about 12 V or 238 kW per stack.

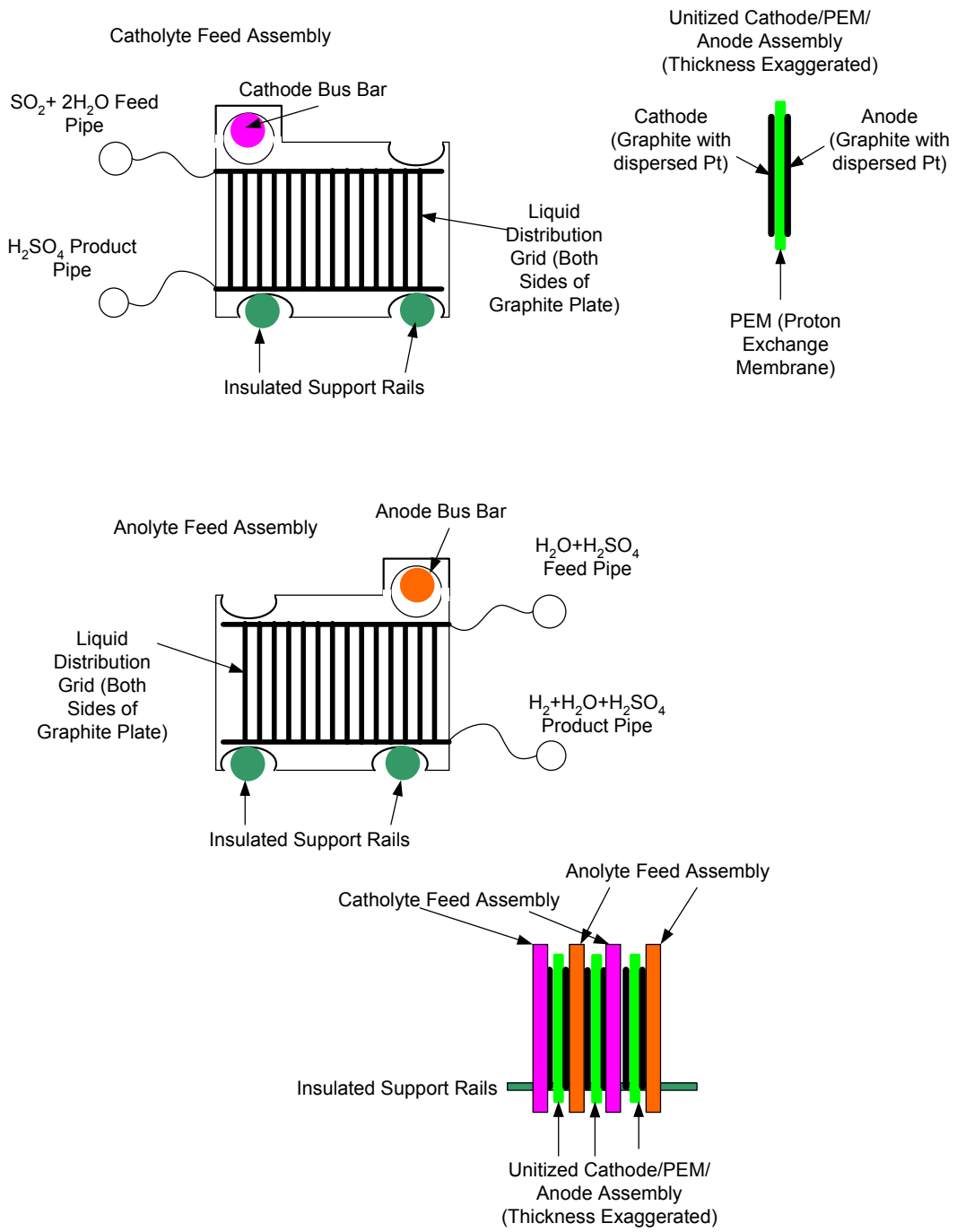

Figure 7.3-5: Electrolysis Cell Assembly Concept

The cells are contained in a frame or "cell rack" (see Figure 7.3-6) that connects them electrically. The cell rack supports the individual cells and includes:

- The liquid inlet and distribution piping to the individual cells;
- The effluent liquid and collection piping from the cells;
- The hydrogen header piping collecting the hydrogen from each cell and carrying it to the main collection system; and
- The bus bars connecting the anodes and cathodes to the direct current power grid.

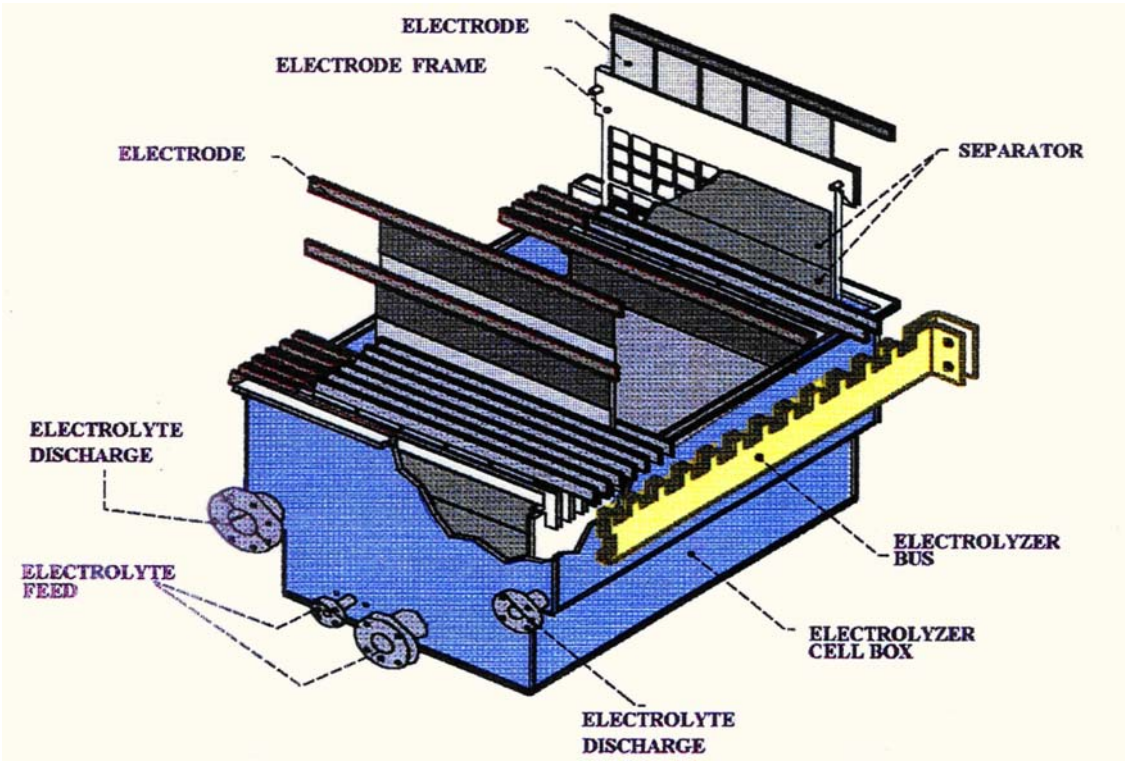

Figure 7.3-6: Typical Electrolyzer Rack

www.spartanwatertreatment.com/eodsystems.html

In the Preconceptual Design, each electrolyzer is contained in an electrolyzer container, a rubber or polytetrafluoroethylene (PTFE)-lined carbon steel pressure vessel that contains the high pressure (4 MPa) operation. The individual cells will then run with a very low differential pressure between the cell and the surrounding tank. Each cell is electrically insulated using an insulated bolt arrangement.

7.3.3.3 Electrolysis System Major Interfaces

The Electrolysis System interfaces with the other systems as follows:

- The Electrolysis System receives a mixture of water, sulfur dioxide and produced oxygen from the Sulfuric Acid Decomposition System.
- The Electrolysis System returns sulfuric acid at about 50 weight percent concentration to the Sulfuric Acid Decomposition System.

- The Feed and Utility Supply System provides ultra-pure feed water, cooling water, electricity, and instrument air during normal operation and, as required, inert gas and steam.
- The FUS supplies the ELE 13 MWe of DC electric power at TBD volts for the electrolyzers and TBD MWe AC electric power at TBD volts for pumps and other electrically powered components.
- Product oxygen with about 5 weight percent sulfur dioxide from the absorbers is sent to the Product Purification System.
- Product hydrogen from the electrolyzers is sent to the Product Purification System.
- The Waste Treatment and Disposal System accepts liquid releases and spills during normal operation, upset conditions, startup, and shutdown.
- The Electrolysis System is a closed system to prevent emissions.

7.3.3.4 Electrolysis System Operation

7.3.3.4.1 Steady State Process Description

The Electrolysis System is a counter-current operation of five SO_2 Absorber/ Electrolyzer pairs that operates at around 4 MPa. Sulfur dioxide absorbing scrubbing liquid flows one way, counter to the sulfur dioxide containing oxygen gas flowing in the opposite direction. The objective of absorption is to remove as much of the sulfur dioxide from the oxygen stream as possible prior to being sent to the PPU. The objective of each electrolysis stage is to use the sulfur dioxide, recovered in the scrubbing solution, to generate sulfuric acid for recycle to decomposition and to generate hydrogen.

Makeup water starts at one end of the countercurrent system as the scrubbing liquid to the top of the Stage 1 SO_2 Absorber (HPS-ELE-AS-302). It proceeds from absorber stage to absorber stage and removes SO_2 gas from the counter-currently flowing oxygen containing, water saturated vapor stream fed to the absorbers. After each absorber, the scrubbing solution is routed through the companion electrolyzer for that stage where the sulfur dioxide concentration is lowered before the solution is used again for scrubbing in the next absorber stage. The absorbers operate at different temperatures ranging from 44°C in Stage 1 to 90°C in Stage 5. The intermediate stages run nominally between 60 and 70°C.

The scrubbing liquid finally drains from the bottom of Stage 5 SO_2 Absorber (HPS-ELE-AS-306) into the Stage 5 Absorber Surge Drum (HPS-ELE-MS-304). There it is diluted with the liquid condensate from the SOx V/L Separator in the SAD before being pumped to Electrolyzer 5 (HPS-ELE-GY-305 A-Q+R,S,T). When the solution exits Electrolyzer 5 it is recycled to the Sulfuric Acid Decomposition System. It contains all the sulfuric acid generated in the five electrolyzer stages plus any condensed in the SOx Cooler.

The water-saturated oxygen containing sulfur dioxide from the SOx V/L Separator is the feed gas to the bottom of the Stage 5 SO_2 Absorber. It flows countercurrently to the SO_2 absorbing liquid, but only through the absorbers. As this oxygen moves from stage to stage, it

becomes depleted in sulfur dioxide. Upon exiting the Stage 1 Absorber, the product oxygen, containing residual sulfur dioxide, is sent to the PPU for final sulfur dioxide removal.

7.3.3.4.2 Non-Steady State Operation

During the Preconceptual Design Phase little or no consideration has been given to non-steady state operation. Nevertheless, it is clear that the operation of the Electrolysis System will be considerably less difficult than that of the SAD. Whereas the SAD is largely a vapor loop that will respond rapidly to upsets in temperature, pressure or composition, the ELE is a liquid-filled system with thousands of cells. The liquid hold-up will have a damping effect on upsets and malfunction of one or more cells will have only a slight effect on the overall process conditions.

7.3.4 Product Purification System

7.3.4.1 Product Purification System Functions and Requirements

Functions

The primary functions of this system are as follows:

- Remove water and sulfur-containing components from the hydrogen product to a purity fit for the purpose for which the hydrogen is produced.
- Remove water and sulfur dioxide from the oxygen produced to a purity fit either for venting to atmosphere or for a suitable purpose.
- Contain the processes and their associated chemicals.

In addition, the following second-order functions are necessary to maintain plant operation:

- Maintain the proper operating temperatures, pressures, and concentrations in the purification equipment.
- Maintain adequate pressure and flow to the Product Storage and Delivery System (PSD)

Requirements

The top-level requirements for this system have not been determined. The use and specifications for the products have yet to be determined. A study to determine the product specifications is planned for the Conceptual Design phase. See Sections 7.5.1.2 and 7.5.2.1 below. For the sake of the Preconceptual Design, the following assumptions were made:

- Deliver about 0.2 kg/s of hydrogen at approximately 3.7 MPa and about 32°C and with a concentration of sulfur species of not more than 4 ppbv and a water content of not more than 5 ppmv. Currently demonstrated industry practice removes sulfur down to 10 to 20 parts per billion. Online sulfur analysis can reliably detect sulfur species concentrations only as low as 10 to 20 parts per billion. While the proposed hydrogen

purification system targets removing sulfur down to the 4 ppb level, this performance will need to be demonstrated prior to the design phase of the program.

- Deliver about 1.6 kg/s of oxygen at approximately 3.8 MPa and 45°C and pipeline quality. No end user has yet been identified for the product oxygen stream, so we assume that the oxygen will simply be vented to atmosphere. However, the oxygen product from the HyS process contains a significant amount of sulfur impurities. Removing this sulfur before venting the oxygen avoids the environmental impact of releasing the sulfur to the atmosphere. The oxygen stream purity target requirement meets pipeline quality specifications so that, if an economical end use for the oxygen stream is identified, this stream will be available for sale without further processing. Caustic scrubbing is adequate for atmospheric rejection and some industrial uses such as coal- to- liquid plants may not require any SO_2 removal.

Additional requirements for this system are specified in the process flow diagrams, heat and material balance, and the sized equipment list. See Appendix G. These requirements will be refined and further requirements will be generated at a later stage in the design. Some of these are as follows:

- Corrosion resistance (Conceptual Design)
- Maintenance requirements (Preliminary Design)
- Safety requirements (Conceptual Design)
- Environmental Requirements (Conceptual Design)

7.3.4.2 Product Purification System Description

The Product Purification System (PPU) consists primarily of sets of adsorbent beds which adsorb water and sulfur impurities. The oxygen adsorbers are preceded by a caustic scrub tower. The equipment is located entirely in the HPS Auxiliary Area, #13 on the Plot Plan (NGNP-03-DWG-002, Section 10, Appendix A).

7.3.4.2.1 Hydrogen Purification

The hydrogen product leaves the HyS system contaminated with water (6.3 weight %) and an assumed sulfur contamination (125 ppmv max) in the form of hydrogen sulfide and sulfur dioxide. The hydrogen must be desulfurized and dried before being sent to the pipeline. The best method for removing the sulfur species down to ppb levels uses a solid phase hydrogenation catalyst followed by a zinc oxide bed. Significant amounts of water vapor in the hydrogen gas are detrimental to the sulfur pickup reaction equilibrium. Therefore, the system must remove the bulk of the water first using a temperature-swing adsorption (TSA) drier before sending the hydrogen product to the hydrogenation/desulfurization system (HDS). The HDS removes the hydrogen sulfide and sulfur dioxide, but the sulfur removal processes involve chemical reactions which generate a small amount of water vapor. The sulfur-free hydrogen stream then goes to a second TSA drier system. This final drying step removes the remaining water vapor, yielding a purified hydrogen stream. The hydrogen is then ready to be compressed and sent to the pipeline.

7.3.4.2.2 Oxygen Purification

The oxygen product stream from the HyS process contains impurities in the form of water vapor (0.19 weight %) and sulfur dioxide (5.23 weight %). No end user has yet been identified for the product oxygen stream. The oxygen will therefore simply be vented to atmosphere. However, for environmental reasons the sulfur contamination must first be removed before the oxygen can be vented. In the process of removing sulfur, the water vapor must also be removed.

The oxygen product stream from the HyS process first enters a caustic scrub column, where the bulk of the sulfur removal will take place using an aqueous sodium hydroxide solution. The stream then flows to a series of two temperature-swing adsorption (TSA) units. The first TSA removes water vapor. The second TSA removes the remaining sulfur dioxide. The resulting pure oxygen stream is dry and free of sulfur, and would be saleable as product if a customer were to be identified.

If the sulfur alone could be preferentially removed from the oxygen stream, there would not be an issue with venting the oxygen with water vapor to the atmosphere. However, there is a likelihood of severe damage to the mole sieve adsorbent material in the sulfur dioxide temperature-swing adsorption unit if the stream is not completely dry before adsorbing the sulfur dioxide.

7.3.4.3 Product Purification System Major Interfaces

The Product Purification System interfaces with the other systems as follows:

- The Product Purification System receives hydrogen product with about 100 to 150 ppmv sulfur impurities and about 6.3 weight % water from the Electrolysis System.
- The Product Purification System receives oxygen product with about 5.3 weight % sulfur dioxide and 0.19 weight % water vapor from the Electrolysis System.
- The Feed and Utility Supply System provides make-up caustic, make-up water, cooling water, steam, electricity, and instrument air during normal operation and, as required, inert gas, catalyst, zinc oxide, and adsorbents.
- Oxygen product is vented to atmosphere.
- Hydrogen product is delivered to the Product Storage and Delivery System.
- The Waste Treatment and Disposal System accepts sodium sulfite purge from the caustic wash SO_2 Scrub Tower as well as liquid releases and spills during normal operation, upset conditions, startup, and shutdown.
- A small amount of water is returned to the Sulfuric Acid Decomposition System.

7.3.4.4 Product Purification System Operation

7.3.4.4.1 Hydrogen Purification

Bulk Water Removal

Water is removed via two vertical temperature-swing adsorption (TSA) beds arranged in parallel with feed entering at the bottom (H2O Adsorber, HPS-PPU-MS-401 A&B). The use of two TSA beds allows for one bed to adsorb water while the other is being regenerated. The beds employ the use of UOP 3A mole sieve to adsorb water from the incoming hydrogen stream while excluding the sulfur-containing species. The design allows for a bed to be on stream up to 30 hours at a time before requiring regeneration.

Drier bed regeneration uses dry, sulfur-free hydrogen product gas taken from the downstream end of the cleanup process, heats it in the H2O Adsorber Regen Heater (HPS-PPU-TE-405), and sends the gas downward through the bed slowly raising the temperature of the bed to 205°C. The high temperature greatly reduces the mole sieve's capacity for water. As a consequence, water molecules are desorbed from the sieve and carried away in the hot gas. The hot, moisture-laden hydrogen leaving the bed is cooled to 32°C in the H2O Adsorber Regen Cooler (HPS-PPU-TT-406), condensing the majority of the water vapor which collects as a liquid in a the Regen water Knockout drum (HPS-PPU-MS-405). The cool hydrogen overhead stream from the separator goes to the Recirculation Blower (HPS-PPU-PB-401) and returns to the upstream end of the process so no hydrogen is lost.

Once the entire bed has been brought to the appropriate regeneration temperature and the water has been driven off the mole sieve, the heater is by-passed and cool hydrogen is sent through the bed, bringing the system back down to the feed temperature. Once this is complete, the bed is ready to be brought back on line. If the TSA is operated properly, the mole sieve material should provide a useful life of 10-15 years or more. The dried hydrogen product from the TSA is then sent to the HDS system for sulfur removal.

Hydrogenation/Desulfurization System (HDS)

The purpose of the HDS is to remove the 125 ppmv of sulfur impurities from the HyS process. The total sulfur impurity can be in the form of either hydrogen sulfide or sulfur dioxide or both. The system is therefore designed with the flexibility to remove both species. The zinc oxide desulfurizing material picks up sulfur from the gas, but only in the form of hydrogen sulfide. The HDS consists of two systems in series. A catalytic Hydrogenator (HPS-PPU-MR-402) first converts any sulfur dioxide present to hydrogen sulfide, and then the Desulfurizer Beds (HPS-PPU-MS-403 A&B) pick up the hydrogen sulfide. Both processes result in the generation of a small amount of water vapor.

The hydrogenolysis reaction in the Hydrogenator and the sulfur pickup reaction that takes place in the Desulfurizer Beds both require elevated temperatures in order to proceed at a reasonable rate. Therefore, the HDS System Heat Economizer (HPS-PPU-TT-401) heats the dry hydrogen from the TSA with hot HDS effluent followed by the HDS Feed Heater (HPS-PPU-TE-402) to raise the stream entering the Hydrogenator to a temperature of 370°C. The Hydrogenator consists of a bed of hydrogenolysis catalyst within a vessel of standard design. Under normal operating conditions, the hydrogenolysis catalyst should provide a useful life of 10-15 years or more.

The Desulfurizer Beds employ zinc oxide material as a sponge to pick up the sulfur species in the form of hydrogen sulfide, while liberating water vapor. The zinc oxide material is converted to zinc sulfide in the desulfurization reaction and thus is gradually consumed. The Desulfurizer Beds operate in series in a lead-lag piping arrangement such that either vessel may be first or second in the series. Each bed is designed for a one-year changeout interval, and the lead-lag arrangement allows one bed to be changed out after detecting sulfur breakthrough from the first bed without shutting down the plant. Any breakthrough of sulfur from the first bed in the series will be picked up by the second, and the second bed can be left on-line alone while the first bed is being changed out.

The hydrogenation and desulfurization reactions tend to be mildly exothermic. However industrial experience supports an assumption that the HDS processes operate with a net loss of 5.5°C attributable to heat leak through the vessel walls. The product hydrogen leaves the desulfurizer at 365°C. After cooling by passing through the economizer exchanger that preheats incoming HDS feed, the HDS Trim Cooler (HPS-PPU-TT-403) drops the temperature of the hydrogen product stream to 32°C using cooling water. The desulfurized hydrogen stream with traces of water vapor is then sent to the Trace Water Adsorber system as a final drying step.

Trace Water Adsorber

The desulfurized hydrogen stream is sent to another water adsorption system to remove any final traces of water vapor generated in the Hydrogenator and Desulfurizer Beds. The water is removed via the Trace H2O Adsorber (HPS-PPU-MS-404 A&B), two vertical temperature-swing adsorption (TSA) beds arranged in parallel with feed entering at the bottom. Just like the H2O Adsorber previously discussed, the use of two TSA beds allows for one bed to be on-line in adsorb mode while the other is being regenerated. The beds employ the use of UOP 3A mole sieve to adsorb water from the hydrogen stream, and the design allows for a bed to be on stream up to 20 hours at a time before regeneration is required.

During regeneration, pure, dry, sulfur-free hydrogen is taken from the back end of the cleanup process, heated and sent downward through the bed in order to raise the temperature of the bed to 150°C. The mole sieve's capacity for water is greatly reduced at high temperature, so as the bed is heated, water molecules are desorbed from the sieve and carried away in the hot gas. Once the entire bed has been brought to the appropriate regeneration temperature and the water has been driven off the mole sieve, the heater is by-passed and cool hydrogen is sent

through the bed to bring the system back down to the feed temperature. Once this is complete, the bed is ready to be brought back on-line. If the TSA is operated properly, the mole sieve material should provide a useful life of 10-15 years or more.

During the regeneration process, the hot and cool hydrogen streams used to regenerate the beds (and associated moisture picked up from the mole sieve) are recycled back to the front end of the hydrogen product cleanup system (upstream of the H2O Adsorber). This arrangement ensures that no hydrogen product is lost.

Downstream of the Trace H2O Adsorber, a portion of the hydrogen product is taken off as regeneration gas for the two TSA units. The remainder of the dried, purified hydrogen product, equal to the amount of hydrogen coming in from the HyS process, is now ready to be compressed to pipeline pressure and sent to the customer.

Operating Precautions

Hydrogen is a flammable gas and must be treated with care. Hydrogen is a fire/explosion hazard in the presence of air or oxygen, so the entire system must be purged with nitrogen to remove air before startup. The hydrogen product compressor should also be designed with the capability of starting up on nitrogen to ensure all air is purged from the system.

At plant startup, the TSA beds may be partially or totally saturated with water and/or carbon dioxide. Regeneration of the beds at lower feed flows with above-normal regeneration flows and/or temperatures for 2 or 3 full cycles should be sufficient to drive off moisture and other contaminants.

The hydrogenolysis catalyst used in the HDS is normally supplied in an oxide state and has a low activity in this state. Unless the catalyst can be purchased in a pre-sulfided state, the catalyst must be sulfided in order to achieve maximum activity, and this can be done on line if the feed gas is high in sulfur. Some sulfur slip will occur through the system during this conditioning process. A manufactured mixture of hydrogen sulfide and hydrogen may be used for the conditioning process if process hydrogen gas is unavailable. The maximum heat-up rate for the catalyst bed is 32°C per hour.

It is important to keep the catalyst in a sulfided state. If the amount of sulfur in the feed from the HyS process drops too low, the sulfur on the catalyst might be driven off and sulfur slip will occur until the sulfur content in the feed increases again to re-sulfide the catalyst. Also, prolonged exposure of the hydrogenator to sulfur-free hydrogen might over-reduce the catalyst.

No special procedure is required to activate the zinc oxide desulfurizer bed.

Upon shutdown of the plant, the entire system should be purged and blanketed with nitrogen to remove all flammable gases, and positive plant pressure should be maintained to keep air out.

7.3.4.4.2 Oxygen Purification

Caustic Scrub Column

The oxygen product stream from the HyS process contains a large amount of sulfur contamination in the form of sulfur dioxide (5.23 wt % SO_2). The SO2 Scrub Tower (HPS-PPU-AS-401) contains sufficient 1" IMTP #25 random packing to produce ten stages of separation. A 10.6 weight % solution of sodium hydroxide in water is fed to the column; the sodium hydroxide solution removes the sulfur dioxide from the vapor phase via reactive absorption, yielding sodium sulfite salt in water. A side stream of the salt solution coming from the bottom of the column is taken off to maintain water balance and to serve as a sodium sulfite purge, while the rest is recycled to the top of the column and blended with the fresh caustic feed.

The NaOH Solution Cooler (HPS-PPU-TT-408) is required to remove the heat of solution generated by the mixing of the solid sodium hydroxide with water and bring the temperature of the solution down to the column operating temperature of 40°C.

This study assumes that the column removes sulfur dioxide in the oxygen stream down to a level of 100 ppmv, and the oxygen stream leaves the column saturated with water vapor.

Water Adsorption

In the next step, water is removed in H2O Adsorber (HPS-PPU-MS-406 A&B), a temperature-swing adsorption (TSA) unit with two adsorption beds arranged in parallel. Using two TSA beds allows one bed to adsorb water while the other bed is being regenerated. The beds employ the use of UOP 3A mole sieve to adsorb water from the incoming oxygen stream while excluding the sulfur dioxide.

The adsorption bed regeneration process uses hot, dry, sulfur-free oxygen from the downstream end of the process, heats it, and sends the gas downward through the bed, slowly raising the temperature of the bed to 150°C. The regeneration process that takes place is similar to that used for the adsorption units on the hydrogen product.

The oxygen stream used to regenerate the bed (and associated moisture picked up from the mole sieve) is recycled back to the upstream end of the oxygen product cleanup system (upstream of the SO2 Scrub Tower). This arrangement ensures that no oxygen product is lost.

The design allows for one bed to be on stream up to 20 hours at a time before requiring regeneration. If the TSA is operated properly, the mole sieve material should provide a useful life of 10-15 years or more.

SO_2 Adsorption

The final step in the oxygen cleanup process is the removal of sulfur dioxide. This step uses the SO_2 Adsorber (HPS-PPU-MS-407 A&B), another temperature-swing adsorption (TSA) unit with two adsorbent beds arranged in parallel. However unlike the other TSA units, this one uses UOP 4A mole sieve, which has a larger pore size than the 3A material. This is to allow the removal of the sulfur dioxide, which has a larger molecular diameter than the water.

Due to the larger pore diameter, if the water vapor had not already been removed upstream, both water vapor and sulfur dioxide would tend to adsorb onto the mole sieve material. These two molecules adsorbed together could allow for the formation of aqueous-phase sulfurous acid (H_2SO_3) on the surface of the mole sieve and decompose the binder material holding the mole sieve pellets together. Thus the water is removed first and the oxygen flows to the SO_2 Adsorber totally dry. The design allows for one bed to be on-stream up to 24 hours at a time before requiring regeneration. The operation and regeneration of this TSA bed is identical in nature to the others. If the TSA is operated properly, the mole sieve material should provide a useful life of 10-15 years or more.

Downstream of the SO_2 Adsorber, the oxygen product is dry and sulfur-free. A portion of the oxygen product is taken off as regeneration gas for the two TSA units. The remainder of the dried, purified oxygen product is equal to the net amount of oxygen produced according to the HyS process heat and material balance.

Operating Precautions

Oxygen vigorously accelerates combustion and may react violently with combustible materials. Even materials that are normally not combustible under a normal atmosphere may burn in the presence of elevated oxygen concentrations (> 23 %). All parts of the system in contact with the oxygen stream must be carefully cleaned to meet the specifications of materials in oxygen service to remove all traces of debris and hydrocarbons. In addition, the entire system must be purged with nitrogen to remove any combustible vapors that may be present before startup.

Mixing the solid sodium hydroxide with water releases a significant amount of energy in the form of heat. Care should be taken not to exceed the 10.6 wt % concentration required by the process; otherwise, the NaOH Solution Cooler will be overloaded and sodium hydroxide solution will be sent to the column hotter than design. In severe cases, if the mixing proportions are incorrect, the sodium hydroxide solution could heat up enough to boil.

Upon startup, a liquid level will need to be established in the sump of the SO_2 Scrub Tower by feeding in sodium hydroxide solution. Once a liquid level is established, the recycle and purge streams can be initiated. Once liquid flow is established in the column, feed gas can be brought in. When the system is shut down and feed gas is cut off, the liquid caustic feed to

the column should be cut off, the recycle pump shut off, and the sump drained completely to waste treatment.

The same startup procedures for the TSA beds on the hydrogen system apply for the oxygen system.

7.3.5 Product Storage and Delivery System

7.3.5.1 Product Storage and Delivery System Functions and Requirements

Functions

The primary functions of this system are as follows:

- Receive purified hydrogen product from the PPU and deliver it to the customer at the rate, purity, state, and pressure required.
- If oxygen is to be sold, receive purified oxygen product from the PPU and deliver it to the customer at the rate, purity, state, and pressure required.

Requirements

Requirements for the Product Storage and Delivery System (PSD) have not been determined, as a customer and use have not been finalized. For the Preconceptual Design, the following requirement has been identified:

- Deliver product hydrogen to a pipeline at 40 bar (g) delivery pressure

Additional requirements for this system are specified in the sized equipment list. See Appendix H. These requirements will be refined and further requirements will be generated at a later stage in the design. Some of these are as follows:

- Corrosion resistance
- Maintenance requirements
- Safety requirements
- Environmental Requirements

7.3.5.2 Product Storage and Delivery System Description

The Preconceptual Design PSD consists of a single compressor, H_2 Product Blower, (HPS-PSD-PB-502). The PSD may become more extensive in a commercial plant if a different destination is found for the hydrogen or oxygen. To avoid potential confusion in the future, this sub-system was defined as separate from the PPU.

7.3.5.3 Product Storage and Delivery System Major Interfaces

The Product Storage and Delivery System interfaces with the other systems as follows:

- PPU supplies hydrogen of the required purity to the PSD.
- PSD supplies pure hydrogen at the required pressure to the customer's pipeline at the plant limits.
- FUS supplies cooling water and electric power to the PSD.

7.3.6 Waste Treatment and Disposal System

7.3.6.1 Waste Treatment System Functions and Requirements

Functions

The primary functions of this system are as follows:

- Collect non-permeate and waste flow from FUS, blowdown flows from PPU, and acid blowdown from SAD.
- Adjust the pH of the aqueous streams prior to discharge to the BOP waste disposal system.
- Collect and dispose of all other wastes such as spent filter cartridges, spent or damaged membranes, fouled or used filter media, spent ion exchange resin, etc.

Requirements

For the Preconceptual Design, the following requirements have been identified:

- Accept 3.6 m3/h of non-permeate and waste flow from FUS
- Accept 3.4 m3/h of 15 weight % sodium sulfite solution from PPU
- Accept 0.36 m3/h of 50 weight % sulfuric acid from SAD
- Adjust the mixed aqueous stream pH to a value of between 6 and 8.

Additional requirements for this system are specified in the sized equipment list. See Appendix I. These requirements will be refined and further requirements will be generated at a later stage in the design. Some of these are as follows:

- Because of the significant volume and cost to neutralize the SAD acid blowdown, an acid purification and recycling system should be investigated for purifying both the waste acid and possibly, the supplied acid. As an alternative, Recovery and recycle of the sulfur dioxide leaving the PPU with the oxygen product should be considered.
- Solid waste collection and disposal requirement
- Corrosion resistance
- Maintenance requirements

- Safety requirements
- Environmental Requirements

7.3.6.2 Waste Treatment System Description

The Waste Treatment and Disposal System (WTD) for the Preconceptual Design consists of two package units, the Waste Water Sump (HPS-WTD-GZ-601) and the Waste Neutralization System (HPS-WTD-GZ-602) that include all the equipment, pumps, tanks, heat exchanges, piping and controls required to carry out the functions and meet the requirements described in the previous section. The Waste Neutralization system includes a waste neutralization tank as part of its scope. These units are located in the HPS Auxiliary Area located north of the Electrolysis Facility (See NGNP-13-DWG-001, Section 10, Appendix A)

7.3.6.3 Waste Treatment System Major Interfaces

The Waste Treatment and Disposal System interfaces with the other systems as follows:

- Accepts acid process blowdown from SAD
- Accepts sodium sulfite process blowdown from PPU
- Accepts wastewater from FUS
- FUS supplies cooling water, electric power and caustic for neutralization to the WTD
- Rejects neutralized wastewater to BOP Wastewater Treatment System
- Collects solid wastes from the entire HPS
- Disposes of solid wastes through outside entities.

7.3.6.4 Waste Treatment System Operation

The waste water system will include three functional areas. The Waste Water Sump (HPS-WTD-GZ-601) will collect all waste water generated in the Hydrogen Production Facility. The collected waste will then be pumped to the Waste Neutralization System (HPS-WTD-GZ-602) which includes a waste neutralization tank for pH adjustment. The wastes collected in the Waste Water Sump are: FUS filter backwash, FUS reverse osmosis reject, and PPU SO2 Scrub Tower blowdown.

The Waste Neutralization System (GZ-602) will take the acid waste SAD blowdown stream and dilute it while also raising the pH. Once diluted, caustic soda will be added to raise the pH and the stream will then flow through a heat exchanger to remove the heat of reaction and heat of dilution. The caustic and heat removal will be a two step process controlled by pH and temperature as required by the BOP. The waste stream will then flow to the waste neutralization tank for final pH adjustment and dilution by the other waste streams flowing through the waste water sump.

7.3.7 Control and Instrumentation System

7.3.7.1 Control and Instrumentation System Functions and Requirements

Functions

The primary functions of this system are as follows:

- Collect all pertinent operating data from the processes in the HPS to allow proper control of operations and economic optimization of operations.
- Control every sub-system of the HPS so that each one carries out its functions according to its individual requirements in all modes of operation.
- Control the HPS as a whole so that it carries out its functions according to its requirements in all modes of operation.
- Coordinate the operation of the HPS with the other systems of the plant according to direction received from the plant-wide control system.

Requirements

For the Preconceptual Design, the following requirements have been identified:

- Provide sensing and data gathering capability for the HPS as indicated in the system P&IDs (Preliminary Design)
- Provide control, automation control logic, information/alarm display and recording functions for the HPS
- Allow for operator overrides where necessary to prevent unnecessary unit shutdowns.

7.3.7.2 Control and Instrumentation System Description

A control room, containing a wide screen display panel, dedicated engineering and operator work stations, and any required auxiliary control and display consoles controls the Hydrogen Control Module and all necessary support systems. Automatic and manual control functions are implemented through the use of graphical user interface touch screen video display terminals. The HPS control system interfaces with the Central Control & Supervisory System (CC&SS) to provide alarm and status monitoring information to the wide panel displays and operator work stations located in the main control room. Actual control of the Hydrogen Generation Module(s) is from a separate dedicated control room located in the Hydrogen Production Facility. The Hydrogen Generation Module control system is a distributed control system (DCS) with redundant control processors and a redundant (dual loop) fiber optic real time high-speed data network. The control system for the Hydrogen Generation Module interfaces with the CC&SS (and all of the local DCS components (processors, I/O Cabinets, displays, Graphical User Interface (GUI) controls, engineering work stations and all other operator interfaces) by means of a high-speed, redundant, real time data network. The DCS processors are configured in a dual redundant mode with automatic fail-over to the redundant processor if a fault is detected in a running processor. The GUI displays and controls are located in the dedicated control room located in the Hydrogen Production Facility. Alarms and control system

failure messages from the Hydrogen Generation Module control system are available in the main control room as system or subsystem common trouble alarms only.

Except where absolutely necessary for local maintenance and troubleshooting activities, the use of local (field mounted) switches and gages are avoided. All required inputs are derived from field mounted sensors and transmitters and then sent directly to the Hydrogen Generation Module control system. The design of the Hydrogen Generation Module control system incorporates smart (bus technology) instruments utilizing foundation fieldbus protocols.

7.3.7.3 Control and Instrumentation System Interfaces

The Hydrogen Generation Module control system interfaces with all of the systems and support systems required to operate and control the Hydrogen Production System. In addition, package/skid mounted systems (such as water treatment, waste treatment, fire protection, air compressors, ventilation systems, etc.) include integral microprocessor based control systems that provide both automatic and manual control and display functions through the use of graphical user interface touch screen video display terminals. These integral control systems interface with the Hydrogen Generation Module control system to provide alarm and status monitoring information to the wide screen display panels and operator/engineering workstations located in the main control room. Limited control functions are also provided. Primary control of the Hydrogen Generation Module(s) is from a separate dedicated control room located in the Hydrogen Production Facility.

Balance of Plant (BOP): HPS Control and Instrumentation interfaces with the BOP Central Control and Supervisory System to provide alarm and status monitoring information in the plant main control room.

7.3.7.4 Control and Instrumentation System Operation

Operation of the Hydrogen Generation Module(s) is accomplished by means of Graphical User Interface screens presented on CRT/LCD video display terminals. Touch screen technology / graphical user interfaces are utilized for operator display selection and control interface. Primary control is provided by automated control logic that allows the operator to monitor plant status without the need for frequent manual operator control interface. In general, preplanned manual operator control is limited to startup and normal shutdown functions and changes in plant operating configurations, for example, increased hydrogen production with a simultaneous reduction in electrical power output.

7.4 HYDROGEN PRODUCTION SYSTEMS DESIGN DATA NEEDS

Thirty-two (32) Design Data Needs (DDNs) have been identified for the Hydrogen Production Systems (HPS). Eight of these pertain to the HPS as a whole, eleven apply to individual systems, and the remaining thirteen are for individual components. Discussion of the DDNs is arranged by system and then by component within each system.

7.4.1 Basic Data DDNs

Basic data on thermodynamic and transport properties as well as reaction kinetics are required to successfully design any chemical plant. Although extrapolations from existing data have been done, laboratory data is required to verify the validity of these extrapolations

7.4.1.1 Functions

Provide the parameters needed for the process and equipment design of the HPS.

7.4.1.2 Key Requirements

The requirements of the basic data are that they cover the range of operating conditions including temperature, pressure, and concentration that are expected in the operating plant. The data must be sufficient to accurately estimate reactor per pass conversions, heat transfer rates, mass transfer rates, pumping power, friction loss in piping and equipment and the like.

7.4.1.3 Design Data Needs

A total of 3 DDNs have been identified for the Basic Data Procurement task. These DDNs involve ensuring that the thermodynamic and kinetic data are accurate, verifiable, and complete. Specifically required are $H_2SO_4/H_2O/SO_2/SO_3$ chemical vapor – liquid equilibrium and kinetic data in the range of temperatures and pressures bracketing the operating conditions of the Decomposer, the Sulfuric Acid Concentrator, and the Electrolytic Cells. See Table 7.4-1 for a listing of these DDNs.

Table 7.4-1: Design Data Needs for Basic Data

DDN	Title
HPS-01	**Feed Purification**
HPS-01-01	Confirm Thermodynamic Data for the HyS Process
HPS-01-02	Gather Reaction Kinetics Data
HPS-01-03	Analyze Data and Improve Process Simulation

DDN HPS-01-01 CONFIRM THERMODYNAMIC DATA FOR THE HYS PROCESS

1. Assumptions

In the development of the Hybrid Sulfur Process (HyS) for generation of hydrogen using a Pebble Bed Modular Reactor (PBMR) as the high temperature heat source, optimal process economics depend in part on efficient heat recovery within the sulfuric acid decomposition system. Simulation of this, in turn, depends on reliable thermodynamic modeling of the complex, high temperature and high pressure processes. Current simulation efforts using the CHEMCAD® chemical process simulator have established a basis of vapor-liquid equilibrium for the sulfuric acid – sulfur dioxide - water system that reproduces the literature data to the degree required for a first cut at the unit operations involved. However, as discussed below, additional thermodynamic data and verification of available and additional data is still required to improve the simulation ability of CHEMCAD®. In turn, this will provide the background necessary to develop improved process designs. As such, our initial assumption that existing data for the sulfur components is adequate needs to be challenged.

2. Current Data Base Summary

Westinghouse Science and Technology Department (WSTD) has been developing reference material and energy balances for this overall process using the CHEMCAD® chemical process simulation software (Reference 1). The HyS process depends upon several processing steps involving sulfur species, including (1) high temperature decomposition of H_2SO_4 to SO_2, H_2O, and O_2; quenching and condensation of the resulting hot $SO_2/SO_3/O_2$ mixture; and (3) absorption of SO_2 into water to form aqueous H_2SO_3 electrolyzer feed. Realistic design of processes to accomplish these three process steps depends on modeling with good thermodynamic data at both elevated pressures and over a wide range of temperatures.

In the course of the Westinghouse effort to construct a process simulation, it was discovered that, at high pressures and temperatures, some of the thermodynamic data for H_2SO_4 vapor-liquid equilibrium (VLE) in particular at high concentration (>70% wt), temperature (>300°C), and pressure did not yield results consistent with the literature. As a result, it was clear that the internal inconsistencies in the VLE data inhibited the smooth and efficient convergence of the simulations. In response to inquiries from Westinghouse, Chemstations Inc., the developers of CHEMCAD® undertook the difficult task of establishing new regression fits for high-temperature and high-pressure sulfuric acid VLE data up to 350ºC and 90% H_2SO_4. These data were incorporated into HyS modeling and represent the current state-of-the-art in this arena.

3. Summary of Data Needed

- Determine sulfuric acid – water data at the higher temperatures and pressures encountered in the evaporator/concentrator.
- Conduct critical pressure and temperature experimental measurements for pure sulfuric acid and its mixtures.
- Develop thermodynamic data for 50 to 100% sulfuric acid from 500° to 1000°C.

4. Designer's Alternatives

The current version of the CHEMCAD® simulator could be used to develop the process designs required.

5. Selected Design Approach and Explanation

It is somewhat fortuitous that the existing thermodynamic models provide reasonably good fits for the particular conditions encountered in the current design. However, improvement of the quality of the thermochemical data is certainly called for in developing more detailed designs. For example, this includes the need to develop improved sulfuric acid VLE data and obtain data for mixtures of sulfuric acid and water near their critical points.

6. Schedule Requirements

Establishing the thermochemical data required prior to the update of the conceptual design package and start of the preliminary design package is key to a successful start of this program. Therefore, this data is needed as soon as possible but certainly by the end of the third quarter of 2008.

7. Priority

Urgency (1-5):	1
Cost-Benefit (Low, Medium, High):	High
Uncertainty in Existing Data (Low, Medium, High):	Low
Importance of New Data (Low, Medium, High):	Medium

8. Fallback Position and Consequences of Non-Execution

The fallback position in this case would be to update our data base using any new data that can be gleaned from the literature. Non-execution of this DDN would most likely not provide the degree of confidence needed for preliminary and final design purposes.

9. References

1. D. F. McLaughlin, E.J. Lahoda, L. Paoletti, (Westinghouse Science and Technology Department) and W. Kriel (Pebble Bed Modular Reactor (Pty) Ltd.), "Thermodynamic Properties for Sulfur Oxide Species at High Temperatures and Pressures for Modeling of the Hybrid sulfur Hydrogen Generation Process," American Institute of Chemical Engineers Annual Meeting, San Francisco, November 12 – 17, 2006.
2. R.H. Perry, D.W. Green, and J.O. Maloney, Perry's Chemical Engineers' Handbook, 6th Ed., McGraw-Hill, New York, NY, pp 3-68 and 3-69; original data from T. Vermeulen et al. (various sources).
3. Z. Giazitzoglou and G. Wuster, Ber. Bunsenges. Phys. Chem., 85, 127 (1981).
4. Critical Temperature as reported by T.E. Daubert, R.P. Danner, H.M. Sibul, and C.C. Stebbins, Physical and Thermodynamic Properties of Pure Chemicals, Taylor and Francis Publishers, University Park, PA (1996).

5. J.E. Stuckey and C.H. Secoy, "Critical Temperature and Densities of the SO_3-H_2O System," J. Chem. Eng. Data, 8(3), 386 (1963).

DDN HPS-01-02 GATHER REACTION KINETICS DATA

1. Assumptions

For purposes of our initial CHEMCAD® calculations, a simplifying assumption (for the reaction shown in Equation 1) was made that all of the sulfuric acid solution vapor pressure is due entirely to water.

(1) $H_2SO_4(g) \leftrightarrow SO_3(g) + H_2O(g)$

This assumption is no longer valid at sufficiently high temperature and realistic modeling of the VLE may require adjustment of the vapor composition for both H_2O and H_2SO_4 vapor as sulfuric acid becomes increasingly decomposed to SO_3 plus H_2O. This process increases the water content of the vapor phase, and further increases the overall pressure since two molecules are formed for every one decomposed.

At sufficiently high temperatures, SO_3 is also unstable, and decomposes to SO_2 and O_2 as shown in equation 2:

(2) $SO_3(g) \leftrightarrow SO_2 + 1/2\ O_2$

Both this reaction and reaction (1) involve temperature-dependent equilibria, and both are reversible. Although no kinetic data have been identified for the reaction (1) it is assumed to be fast (being pseudo-first-order) so that it assumed to be at equilibrium. Likewise, it is also assumed that reaction (2) is in equilibrium with the equilibrium composition based on available free energy data.

2. Current Data Base Summary

An equilibrium simulation of hot sulfuric acid vapor products at 9.1 MPa was used for our initial simulation of the kinetics occurring in the decomposition reactor. As mentioned above, the equilibrium simulation of SO_3 to SO_2 and O_2 is determined strictly by the free energies of formation of the three species as functions of temperature. For the CHEMCAD® simulation, the free energy data was taken directly from the DIPPR 801 database. DIPPR is perhaps the most carefully verified set of thermochemical property data available. CHEMCAD® SO_3 – SO_2 equilibrium computations are therefore not in question, and require no empirical data regression as do the much more complicated electrolyte properties. The data indicate that nearly 850ºC is required to achieve 50% conversion of sulfur trioxide to dioxide; the design temperature of the HyS decomposition reactor produces an equilibrium mixture roughly 60 % mole SO_2 to 40 % mole SO_3.

However, the reported rate controlling for decomposition of SO_3 to SO_2, although pseudo-first-order, typically requires catalytic enhancement if the reaction is to equilibrate below about 1000 to 1100ºC. Computed kinetic rates based on the fourth reference of the previous DDN (HPS-01-01) are as follows:

$$\boldsymbol{k}\ (cm^3\ mol\text{-}1\ sec\text{-}1) = 1.0 \times 10^{17} \exp[-(80\ kcal)/\ RT]$$

The rate for SO_3 decomposition at 9.1 MPa and 672ºC maximum critical temperature would require between 5 and 10 hours to equilibrate, while at a decomposition temperature of 1000ºC the reaction can be equilibrated in a time scale on the order of a second.

3. Summary of Data Needed

- Develop an experimental test program to determine the rate limiting step with respect to the decomposition kinetics.
- Perform acid decomposition studies at pressures of 2 to 10 MPa and temperatures of 750ºC to 900ºC.

4. Designer's Alternatives

The assumptions and data outlined previously could be used to simulate the reaction kinetics assumed in our initial model.

5. Selected Design Approach and Explanation

The assumptions made that the two significant reactions shown above were at equilibrium have provided a model that was sufficient for our initial modeling efforts. However, additional testing and modeling of the results coupled with existing data will provide additional insight to the kinetics of the system. This will ensure that the kinetic design of the Decomposer will be enhanced and reduce the number of redesign efforts required during pilot and full-scale operations.

6. Schedule requirements

The analyses and modeling described in DDN HPS-01-03 should be complete prior to the start of Preliminary Design. The experimental work described in this DDN must be complete before the beginning of that modeling.

7. Priority

Urgency (1-5):	1
Cost-Benefit (Low, Medium, High)	High
Uncertainty in Existing Data (Low, Medium, High)	Medium
Importance of New Data (Low, Medium, High)	High

8. Fallback Position and Consequences of Non-Execution

The fallback position in this case would be to update our data base using any new data that can be obtained from the literature. Non-execution of this DDN would most likely not provide that degree of confidence needed for design purposes.

9. References

1. A.G. Gaydon, G.H. Kimbell and H.B. Palmer, "A Shock-Tube Study of the Kinetics of Decomposition of Sulfur Dioxide," Proc. Roy. Soc. London, Ser. A, 276, 461 (1963).

DDN HPS-01-03 ANALYZE DATA AND IMPROVE SIMULATION

1. Assunptions

The evaporation vapor-liquid equilibrium is shown schematically in Equation (1) below:

(1) $$[H_2SO_4 / HSO_4^- / SO_4^{-2} / H_2O] \Leftrightarrow H_2SO_4\,(g) + H_2O\,(g)$$

This is a complex process, by which aqueous sulfuric acid, existing almost entirely as dissociated ionic species, evaporates along with the water. Under most conditions for which VLE data have been collected, the vapor phase consists almost entirely of water, and the water partial pressure is essentially identical to the total vapor pressure, as mentioned previously. From the point of view of process modeling, this assumption only fails for relatively high temperatures and high H_2SO_4 concentrations. At high concentration and low temperature, although the vapor mole fraction of H_2SO_4 may be large, the total vapor pressure may be exceedingly small.

Improved simulation capability is also required. The need to develop regression parameters for sulfuric VLE and to accurately model the solubility of SO_2 in sulfuric acid solutions also presents a challenge, as discussed previously. The current deficiencies may be in part due to lack of historical incentive to match data collected under conditions of extremes of concentration, temperature or pressure. However, research is needed to extend current theoretical models. In particular, the modeling of the equilibrium between a concentrated, strong electrolyte liquid phase and a dissociating gas phase at conditions approaching the critical point does not fall within the normal capabilities of models found in CHEMCAD®. As mentioned previously, regression of experimental vapor pressure data is especially challenging under these conditions. Successful completion of this task and its integration into the CHEMCAD® model will improve our capabilities for process simulation.

2. Current Data Base Summary

Since good quality thermodynamic data are critical to the development of a critical design (particularly for the direct contact heat exchanger, the decomposition reactor, and the sulfur dioxide absorber(s)), assessments have been done to verify the accuracy of the CHEMCAD® predictions for species of interest, and to investigate the reliability of available literature data. Fundamental thermodynamic and kinetic data were therefore checked and reviewed for consistency with the literature, including H_2SO_4 vapor-liquid equilibrium (VLE), azeotropism, H_2SO_4 equilibrium vapor phase decomposition, and SO_2 solubility in sulfuric acid solutions.

In the course of this effort, it was discovered that at high temperatures and pressures, some of the thermodynamic data H_2SO_4 VLE, in particular at high concentration (>70% wt), temperature (>300ºC) and pressure, did not yield results consistent with the available literature. In addition, the internal inconsistencies in the VLE data inhibited smooth and efficient convergence of the simulations. In response to inquiries from Westinghouse, Chemstations Inc., the developers of CHEMCAD®, undertook the difficult task of establishing new regression fits

for high-temperature and high-pressure sulfuric acid VLE binary interaction parameters (BIPs) and Henry's constants. These were based on VLE up to 350ºC and 90% H_2SO_4. The data was obtained from Reference 1 in DDN HPS-01-01. These regressions were incorporated into our modeling and represent the current status of our modeling effort.

3. Summary of Data Needed

- Model the equilibrium between a concentrated strong electrolyte liquid phase and a dissociating gas phase.
- Develop regression fits for sulfuric acid vapor liquid equilibrium (VLE)
- Model the equilibrium between a concentrated strong electrolyte liquid phase and a dissociating gas phase.
- Regress experimental vapor pressure data.
- Update CHEMCAD® modeling.

4. Designer's Alternative

The current version of CHEMCAD®, with its existing data bank, could be used to provide mass and energy balances for design purposes. However, these data must be updated or obtained for the first time to overcome the data issues that have been encountered in our initial conceptual design attempt.

5. Selected Design Approach and Explanation

The CHEMCAD® model used in this in developing our initial conceptual design will also be used for providing design data for the conceptual design, preliminary design, and final design. It is somewhat fortuitous that our CHEMCAD® model converged using available data. As such, it is essential that the required thermodynamic and kinetic data be obtained and incorporated into the model prior to undertaking the preliminary design.

6. Schedule Requirements

Establishing the required thermodynamic and kinetic data prior to the preliminary design is needed. However, any data procured during the preparation of the final conceptual data will be incorporated into the CHEMCAD® data base in parallel with the modeling.

7. Priority

Urgency:	1
Cost-Benefit (Low, Medium, High):	High
Uncertainty in Existing Data (Low, Medium, High):	Medium
Importance of New Data (Low, Medium, High)	High

8. Fallback Position and Consequences of Non – Execution

The fallback position in this case would be to update our data base using any new data that can be gleaned from the literature. Non-execution of this DDN would most likely not provide the degree of confidence required for preliminary and final designs.

9. References

1. R. C. Reid and T. K. Sherwood, The Properties of Gases and Liquids, 2nd Ed. McGraw-Hill, New York NY, 1966.

2. M. W. Chase Jr., C. A. Davies, J. R. Downey Jr., D. J., Frurip, R. A. McDonald, and Syverud, "JANEF Thermochemical Tables," J. Phys. Chem. Ref. Data, 14, Suppl. 1, American Chemical Society, Washington, DC, 1985.

7.4.2 Supplementary Materials DDNs

This set of DDNs is intended to be a placeholder for work that is frequently neglected in early process technology development. To build a commercial plant, many more materials are required than those from which the major equipment is constructed. The conditions under which sulfuric acid is being handled in this plant are unusually, if not uniquely, severe. Finding adequate materials of construction for the major equipment that will both meet those demands and be economic will be challenging. Finding adequate secondary materials for gaskets, seals, piping, welding materials and coatings will be equally challenging. No significant effort in this area has yet been launched. In the Preconceptual Design phase, the need for work in this area has been identified, but the nature of that work has not been clarified.

7.4.2.1 Functions

To contain the process at the junctions between major pieces of equipment and between moving parts that communicate with both the process and the ambient surroundings

7.4.2.2 Key Requirements

Requirements for supplementary materials will be developed during Conceptual Design during the development of the conceptual P&IDs.

7.4.2.3 Design Data Needs

Five Design Data Needs have been identified to cover this important area of materials development. See Table 7.4-2 below. The number of DDNs may expand or contract as the requirements are identified and clarified. As initial inquiries to meet these DDNs are undertaken, more details can be added.

Table 7.4-2: Design Data Needs for Supplementary Materials

DDN	Title
HPS-02	**Feed Purification**
HPS-02-01	Develop Gasket Materials and Design
HPS-02-02	Develop Seal Materials and Design
HPS-02-03	Develop Welding Materials
HPS-02-04	Develop Cladding and Coating Materials
HPS-02-05	Develop Piping Materials and Design Methods

DDN HPS-02-01 DEVELOP GASKET MATERIALS AND DESIGN
DDN HPS-02-02 DEVELOP SEAL MATERIALS AND DESIGN
DDN HPS-02-03 DEVELOP WELDING MATERIALS
DDN HPS-02-04 DEVELOP CLADDING AND COATING MATERIALS
DDN HPS-02-05 DEVELOP PIPING MATERIALS AND DESIGN METHODS

1. Assumptions

None

2. Current Database Summary

None currently exists. A literature and vendor search for possibly relevant materials is recommended as part of the scope of this work.

3. Summary of Data Needed

Before the Final Design is complete, a workable combination of design and materials must be found for every service in the plant.

4. Designer's Alternatives

No alternatives are envisioned.

5. Selected Design Approach and Explanation

No design approach has yet been proposed.

6. Schedule Requirements

Initial searches and vendor inquiries can begin immediately. Every identified service should have a workable solution consisting of a combination of materials and design identified before the construction of the pilot plant. Final Design cannot proceed without these solutions being tested in service.

7. Priority

Urgency (1-5):	2
Cost-Benefit (Low, Medium, High):	High
Uncertainty in Existing Data (Low, Medium, High):	High
Importance of New Data (Low, Medium, High):	High

8. Fallback Position and Consequences Of Non-Execution

There is no fallback.

9. References

None

7.4.3 Feed Purification DDNs

It is not yet known the extent to which feed water or cycle acid purification is required in the Hybrid Sulfur process. It is expected that because the feeds to the process are aqueous liquid streams and that the products are all gaseous, some dissolved cations will accumulate in the system. The purpose of this set of DDNs is to determine to what extent purification is required and to test existing commercial purification methods for their effectiveness in meeting those requirements. Purification methods may be required on the feed water stream, on sulfuric acid make-up, or on a slip stream from the main sulfuric acid loop. One possibility is continuous treatment of a stream withdrawn from the Sulfuric Acid Storage Tank and returning that stream to the tank. These DDNs are intended to address all these possibilities. It is assumed that adequate commercial purification methods exist to reach the required purity levels. Additional DDNs will have to be added to this group if this is not the case.

7.4.3.1 Functions

To prevent fouling or deterioration of the Electrolyzer membranes, Decomposer catalyst, heat transfer surfaces and other sensitive components of the NGNP HPS due to deposition of materials dissolved in the circulating sulfuric acid.

7.4.3.2 Key Requirements

The requirements of a feed and circulating acid purification system are to be determined by studies preceding the Conceptual Design and by the work specified in these DDNs

7.4.3.3 Design Data Needs

Four DDNs have been identified for setting requirements for a feed and/or circulating acid purification system as well as for testing of existing purification methods to determine their suitability for this service See Table 7.4-3. It does not include scoping work to further define these DDNs. This is expected to be carried out as part of the Conceptual Design.

Table 7.4-3: Design Data Needs for Feed Purification

DDN	Title
HPS-03	**Feed Purification**
HPS-03-01	Determine Decomposer Tolerance for Impurities
HPS-03-02	Determine Electrolyzer Tolerance for Impurities
HPS-03-03	Test Sulfuric Acid Purification Methods
HPS-03-04	Test Feed Water Purification Methods

DDN HPS-03-01 DETERMINE DECOMPOSER TOLERANCE FOR IMPURITIES

1. Assumptions

It is assumed that a method can be found for testing this tolerance during the pilot plant operation.

2. Current Database Summary

None currently exists.

3. Summary of Data Needed

Data needed includes measuring the concentrations of cations in the circulating acid in the pilot plant and measuring possible deterioration of the decomposer performance as a function of these concentrations. Of particular concern are low concentrations of corrosion products in the circulating acid. Extended operations may be required to determine an acceptable concentration for these materials. Furthermore, inspection of the Decomposer catalyst and heat transfer surfaces for signs of effects caused by these cations is recommended.

4. Designer's Alternatives

There is no alternative. Ignoring this issue may lead to unacceptable performance in the NGNP demonstration plant.

5. Selected Design Approach and Explanation

The proposed approach is to do doping tests during the development of the decomposition catalyst, expecting that this will be the most sensitive part of the system to dissolved cations. Preliminary design of purification system(s) will be based upon those bench-scale findings. Confirmation of those will be sought in these pilot plant tests. The design(s) will be refined on the basis of these tests.

6. Schedule Requirements

This work cannot be started before the pilot plant has been operated for several months. It is preferable to have the work complete before the Preliminary Design has progressed beyond initial process simulation work. It must be complete well before the beginning of Final Design.

7. Priority

Urgency (1-5):	4
Cost-Benefit (Low, Medium, High):	Medium
Uncertainty in Existing Data (Low, Medium, High):	High
Importance of New Data (Low, Medium, High):	High

8. Fallback Position and Consequences Of Non-Execution

The fallback position is to depend upon doping tests performed during the catalyst development. This will not, however, replicate the commercial conditions. The consequences of omitting this testing are the possibility of a rapid unexplained deterioration in the performance of the demonstration plant.

9. References

None

DDN HPS-03-02 DETERMINE ELECTROLYZER TOLERANCE FOR IMPURITIES

1. Assumptions

It is assumed that a method can be found for testing this tolerance during the pilot plant operation.

2. Current Database Summary

None currently exists. There may be information available on the sensitivity to PEMs to dissolved cations from fuel cell and other similar work. If so, this needs to be gathered and reviewed for relevance as part of this task.

3. Summary of Data Needed

Data needed includes gathering existing information on the effects of cations on the performance of PEMs and other cell components and reviewing this information for relevance to the Electrolyzer design. Measuring the concentrations of cations in the circulating acid in the pilot plant and measuring possible deterioration of the electrolyzer performance as a function of these concentrations is also needed. Of particular concern are low concentrations of corrosion products in the circulating acid. Extended operations may be required to determine an acceptable concentration for these materials. Furthermore, inspection of the Electrolyzer components for signs of effects caused by these cations is recommended.

4. Designer's Alternatives

The designer requires information on the acceptable level of cations in the circulating acid. One may depend upon doping tests performed on the prototype or pilot scale single cell, but these will not replicate the conditions in the demonstration unit or in a commercial plant. Ignoring this issue may lead to unacceptable performance in the NGNP demonstration plant.

5. Selected Design Approach and Explanation

The proposed approach is to do doping tests during the development of the prototype and pilot scale cells. This may lead to the selection of less sensitive membranes or materials for which the sensitivity is known. Preliminary design of purification system(s) will be based upon those bench-scale findings. Confirmation of those will be sought in these pilot plant tests. The design(s) will be refined on the basis of these tests.

6. Schedule Requirements

This work cannot be started before the pilot plant has been operated for several months. It is preferable to have the work complete before the Preliminary Design has progressed beyond initial process simulation work. It must be complete well before the beginning of Final Design.

7. Priority

Urgency (1-5):	4
Cost-Benefit (Low, Medium, High):	Medium

Uncertainty in Existing Data (Low, Medium, High): High
Importance of New Data (Low, Medium, High): High

8. Fallback Position and Consequences Of Non-Execution

The fallback position is to depend upon doping tests performed during the cell development. This will not, however, replicate the commercial conditions. The consequences of omitting this testing are the possibility of a rapid unexplained deterioration in the performance of the demonstration plant.

9. References

None

DDN HPS-03-03 TEST SULFURIC ACID PURIFICATION METHODS

1. Assumptions

It is assumed that commercial methods are available that will produce the required purity in both the feed acid and in the circulating acid.

2. Current Database Summary

None currently exists. A literature and vendor search for possibly relevant purification methods is recommended as part of the scope of this work. Initial searches cannot be properly reviewed until the requirements set by DDNs HPS-03-01 and 02 are determined.

3. Summary of Data Needed

Data needed includes gathering existing information on cation removal methods applicable to a 50 weight % sulfuric acid solution and testing these methods to see whether they can meet the purity requirements in a commercial application.

4. Designer's Alternatives

One alternative to purifying the feed acid and/or the circulating acid is to find a sulfuric acid decomposition catalyst, a cell catalyst, a membrane or diaphragm, and other possibly sensitive components of the system that will not deteriorate due to expected concentration levels of cations. Another alternative is to take an adequate blowdown from the circulating acid and purify the feed water. Choice of an alternative will depend upon the requirements.

5. Selected Design Approach and Explanation

The proposed approach is to design or specify a purification system based on the findings of this research. The required blowdown is likely to be excessive and the difficulty in developing robust components is judged to be considerably more than finding an adequate purification system.

6. Schedule Requirements

Early data gathering to build a data base can start immediately. Selection of a technology and testing cannot begin until the requirements are known. This work must follow completion of DDNs HPS-03-01 and 02. It is preferable to have the work complete before the Preliminary Design has progressed beyond initial process simulation work. It must be complete well before the beginning of Final Design.

7. Priority

Urgency (1-5):	4
Cost-Benefit (Low, Medium, High):	Medium
Uncertainty in Existing Data (Low, Medium, High):	High
Importance of New Data (Low, Medium, High):	High

8. Fallback Position and Consequences Of Non-Execution

The fallback position is to concentrate on the design alternatives these, however, are expected to be more difficult than the proposed approach. The consequences of pursuing neither course are the possibility of a rapid unexplained deterioration in the performance of the demonstration plant.

9. References

None

DDN HPS-03-04 TEST FEED WATER PURIFICATION METHODS

1. Assumptions

It is assumed that commercial methods are available that will produce the required purity in the feed water.

2. Current Database Summary

There are several commercially available methods which can produce ultra-pure water.

3. Summary of Data Needed

Once the acid cycle purity requirements have been determined (DDNs HPS-03-01 & 02), the level of feed water purification required can be determined and the choice of a water purification system made. It will then be advisable to verify the performance of a feed water purification system in the pilot plant, since this is a new application.

4. Designer's Alternatives

It may not be necessary to purify the feed water to a great degree if the sensitivity of the electrolyzers is low and the circulating acid can be adequately purified. Some water purification, however, will probably be required.

5. Selected Design Approach and Explanation

A design approach has not yet been selected. Selection between some combination of blowdown, feed water purification and cycle acid purification will probably be required, but the required trade studies have not been made.

6. Schedule Requirements

Testing must await pilot plant operation.

7. Priority

Urgency (1-5):	5
Cost-Benefit (Low, Medium, High):	Low
Uncertainty in Existing Data (Low, Medium, High):	Low
Importance of New Data (Low, Medium, High):	Low

8. Fallback Position and Consequences Of Non-Execution

Testing of some kind of water purification is inevitable if a pilot plant is to be built. The pilot plant will have a water treatment facility of some kind. Untreated water will not be acceptable as a feedstock.

9. References

None

7.4.4 Decomposer DDNs

The Decomposer is one of the two key unit operations that make up the HyS process. In the Decomposer sulfuric acid is catalytically decomposed to sulfur dioxide, oxygen, and water. The sulfur dioxide serves to reduce the voltage in the Electrolyzer where hydrogen is generated. The net effect is to decompose water at lower energy consumption than straight water electrolysis. The decomposition takes place at above 850°C and the pressure is maintained at almost 9 MPa to minimize the pressure differential across the helium-to-process interface. Because of the extreme operating conditions, the requirement for reduced maintenance and the corrosive nature of the sulfuric acid, the catalytic Decomposer presents unique challenges in material selection and construction details, and is perhaps the most challenging piece of equipment in the HyS process to design. The main issue, as with the Intermediate Heat Exchanger (IHX), is that most metals do not have good long term creep resistance at the decomposer operating temperature (~900°C). In addition, the Decomposer contains an aggressive environment of high temperature oxygen, sulfuric acid, steam and sulfur dioxide.

7.4.4.1 Functions

To use heat from the Secondary Heat Transport System (SHTS) to decompose sulfuric acid into components which facilitate the electrolytic separation of Hydrogen from water.

7.4.4.2 Key Requirements

Accept a stream of concentrated sulfuric acid at approximately 80 weight % at 524°C., and 9MPa.

Using heat from the SHTS, dissociate the sulfuric acid into sulfur dioxide, oxygen, and water at over 850°C to be used for electrolytic separation of hydrogen.

Provide a catalyst life of no less than 2 years before replacement.

Meet ASME Code requirements for Section VIII (using developed Code Cases, as necessary).

7.4.4.3 Design Data Needs

The seven DDNs listed below have been identified for the purpose of design, construction, testing, and code acceptance of the Decomposer. If an alternative design is chosen, these DDNs could change. See Table 7.4-4.

Table 7.4-4: Design Data Needs for the Decomposer

DDN	Title
HPS-04	**Decomposer**
HPS-04-01	Develop a Commercial Sulfuric Acid Decomposition Catalyst
HPS-04-02	Test Silicon Carbide and other Ceramic Material in Decomposition Service
HPS-04-03	Test Alloy 230 and Alloy 617 in a High Temperature Sulfuric Acid, Sulfur Dioxide, and Oxygen Atmosphere.
HPS-04-04	Develop a Method to Bond Alloy 230 or Alloy 617 or Similar Materials to Silicon Carbide and other Ceramics.
HPS-04-05	Develop Materials to Seal the Joints between Ceramic Decomposer Elements and the Metallic Tube Sheet or Vessel.
HPS-04-06	Test a Pilot-Scale Decomposer.
HPS-04-07	Provide Data Supporting a Design Code Case

DDN HPS–04-01 DEVELOP A COMMERCIAL SULFURIC ACID DECOMPOSITION CATALYST

1. Assumptions

A commercial catalyst is required that has an economic life of not less than about 20,000 hours

2. Current Data Base Summary

Characterization of the acid decomposition process has been done primarily at atmospheric pressure where conversion levels of up to 70% over proprietary catalysts have been reported in small scale laboratory tests at 850°C. Initial testing of catalysts at Idaho National Laboratory (INL) (Reference 1) and Korea Atomic Energy Research Institute (KAERI) has shown promising results in increasing the rate of decomposition of sulfur trioxide in the 800 to 875°C temperature range. INL tests show a sharp initial drop in activity that decelerates with time, but so far testing has not proceeded past about 500 hours duration. It is not clear whether deactivation continues past this point.

3. Summary of Data Needed

A commercial sulfur trioxide decomposition catalyst with an adequate economic life (about 20,000 hours) is to be developed. Catalyst studies include testing of known, attractive candidate active materials as well as new candidate options. Testing of support materials and combinations of active materials and supports is required. Finally, practical methods of bulk catalyst manufacture must be developed.

4. Designer's Alternatives

A catalyst with a shorter life may be used if it is inexpensive and a convenient way can be found to replace it in the reactor.

5. Selected Design Approach and Explanation

The current design approach is to assume that a catalyst with 20,000 hours life and about 48% decomposition at 875°C.

6. Schedule Requirements

Development of the Decomposer is close to being on the critical path of the NGNP project. Catalyst development can be started in parallel with gathering kinetic data (DDN HPS-01-02) and should be started immediately.

7. Priority

Urgency (1-5)	1
Cost-Benefit (Low, Medium, High)	High
Uncertainty in Existing Data (Low, Medium, High)	Medium
Importance of New Data (Low, Medium, High)	High

8. Fallback Position and Consequences of Non-Execution

There is no fallback position

9. References

1. D. M. Ginosar, L. M. Petkovic, A. W. Glenn, and K. C. Burch, "Stability of supported platinum sulfuric acid decomposition catalysts for use in thermochemical water splitting cycles," International Journal of Hydrogen Energy, Vol. 32, pp. 482-488, 2007.

2. V. Barbaroosa, S. Brutti, M. Diamanti, S. Sau, and G. DeMaria, "Catalytic thermal decomposition of sulfuric acid in sulphur-iodine cycle for hydrogen production," International Journal of Hydrogen Energy, Vol. 31, pp. 883-890, 2006.

3. S. Spewock, L. E. Brecher, and F. Talko, "The thermal catalytic decomposition of sulfur trioxide to sulfur dioxide and oxygen," Proceedings of the 1st World Hydrogen Energy Conf., Vol. 1, 16p (SEE N77-N77-21552 12-44), March 1976.

4. P. W. T. Lu and R. L. Ammon, "Development status of electrolysis technology for the sulfur cycle hydrogen production process," In: Hydrogen Energy Progress; Proceedings of the Third World Hydrogen Energy Conference, Tokyo, Japan, Vol. 1. (A81-42851 20-44) Pergamon Press, New York, pp. 439-461, 1981.

DDN HPS-04-02 TEST SILICON CARBIDE AND OTHER CERAMIC MATERIALS IN DECOMPOSITION SERVICE

1. Assumptions

Silicon carbide and alumina based materials are suitable for use in a commercial scale Decomposer.

2. Current Data Base Summary

Silicon carbide based ceramics have physical and mechanical properties that recommend their use for this application. These properties include high strength and thermal conductivity, low coefficient of thermal expansion, and high resistance to oxidation (in air) and thermal shock. Toughened-alumina ceramics are also candidate materials. Monolithic alumina is strong and resistant to oxidation and corrosion, but unless toughened with whiskers, particles, or filaments, is too susceptible to damage by creep or thermal shock. Silicon carbide tubes have been used in sulfuric acid decomposition service in bench-scale testing (Reference 1)

3. Summary of Data Needed

The key steps in the development of data for selecting a ceramic material for use in the HyS Decomposer are as follows:

- Testing will be conducted in accordance with National Association of Corrosion Engineers (NACE) Standard TM0499-99
- Selection and preparation of test specimens - examples of potential candidates include nitride bonded silicon carbide, standard purity silicon carbide, and silicon carbide whisker-toughened aluminum oxide.
- Development of immersion corrosion test apparatus
- Test exposure conditions – at this point it is anticipated that temperature would be varied from 750-1100°C, pressure from atmospheric to 5MPa, in an environment of a composition similar to that in the Decomposer.
- Post test cleaning and evaluation – after exposure and cleaning, the samples will be subjected to weight gain/loss measurements, optical microscopy, scanning electron microscopy and X-ray diffraction and other testing deemed desirable based on the previous evaluations.
- Calculation of corrosion rates and model development.

4. Designer's Alternatives

Metal alloys or a less expensive ceramic material might be used for the heat transfer surfaces in the reactor, but at this point it appears that a ceramic such as Hexoloy SE® silicon carbide is a better choice because of either the lack of creep strength in available alloys at the operating temperature or the low thermal conductivity in other ceramics.

5. Selected Design Approach and Explanation

The current design uses Hexoloy SE® silicon carbide tubes for the Decomposer heat transfer surface.

6. Schedule Requirements

Work on this task is scheduled to begin at the outset of the program. It is not on the critical path, however, and may be delayed for up to two years.

7. Priority

Urgency (1-5)	2
Cost-Benefit (Low Medium, High)	High
Uncertainty in Existing Data (Low, Medium, High)	Low
Importance of New Data (Low, Medium, High)	Medium

8. Fallback Position and Consequences of Non-Execution

The first fallback position would be to use a high quality silicon carbide material suitable for heat exchanger tubes at high temperatures, such as Hexoloy SE®. The second would be to use metallic tubes with extensive testing.

9. References

1. F. Gelbard, et.al., (Sandia National Laboratory), "Sulfuric Acid Decomposition Status," NHI Semiannual Program Review, Germantown, MD, October 31, 2006.

2. H. Kim and A. J. Moorehead, "Strength of Nicalon Silicon Carbide Fiber Exposed to High-Temperature Gaseous Environments," J. Am. Ceram. Soc., Vol. 74(3), 666-69, 1991.

3. J. I. Federer, H. E. Kim, and A. J. Moorehead, "Corrosion of SiC and Oxide Composite Ceramics by a Simulated Steam-Reformer Atmosphere," Prepared by Oak Ridge National Laboratory for U. S. Department of Energy, under Contract DE-AC05-84OR21400, Sept. 1991.

DDN HPS–04-03 TEST ALLOY 230 AND ALLOY 617 IN A HIGH TEMPERATURE SULFURIC ACID, SULFUR DIOXIDE, AND OXYGEN ATMOSPHERE

1. Assumptions

Alloy 230 and Alloy 617 are the only readily available metallic materials that have both adequate creep strength and corrosion resistance for application in the Decomposer for parts that cannot be fabricated from ceramic materials, are subject to high stress at elevated temperatures, and are exposed to a corrosive atmosphere of sulfur dioxide, steam and oxygen.

2. Current Data Base Summary

The database for Alloy 230 and Alloy 617 regarding information on the corrosion, microstructural stability and mechanical property changes that may occur as a function of time, temperature and environmental conditions following long term high temperature exposure to an environment of oxygen, sulfur dioxide and steam has not been investigated. This investigation is to be included in this work.

3. Summary of Data Needed

A database of information on the corrosion, microstructural stability and mechanical property changes that may occur as a function of time, temperature and environmental conditions following long term high temperature exposure to an environment of oxygen, sulfur dioxide and steam needs to be developed. In addition, environmental exposure tests replicating the Decomposer process environment are to be performed in conjunction with the tests performed as part of DDN HTS-01-05 and DDN HTS-01-11 (Reference 1).

4. Designer's Alternatives

The use of metallic components may prove to be more suitable and economical in certain applications that support the decomposer. If suitable metals components are not found, however, then it may be necessary to line the metallic components with ceramics. This may result in fabrication complications.

5. Selected Design Approach and Explanation

The piping design for our conceptual design was based on metallic components to support the decomposer. If the metallic components are not suitable then ceramic linings will have to be considered.

6. Schedule Requirements

This work is to be carried out in conjunction with the work for DDNs HTS-01-05 and HTS-01-11 and should be scheduled accordingly.

7. Priority

Urgency (1-5)	3
Cost-Benefit (Low, Medium, High)	Medium
Uncertainty in Existing Data (Low, Medium, High)	Medium
Importance of New Data (Low, Medium High)	Medium

8. Fallback Position and Consequences of Non-Execution

If this task is not executed, it may be necessary to use ceramic linings in certain metallic items that support the Decomposer.

9. References

1. NGNP and Hydrogen Production Preconceptual Design Report, NGNP-01-RPT-001, Section 6: Heat Transport System, May 2007.

DDN HPS-04-04 DEVELOP A METHOD TO BOND ALLOY 230 OR ALLOY 617 OR SIMILAR MATERIALS TO SILICON CARBIDE AND OTHER CERAMICS

1. Assumptions

The Decomposer and Concentrator design will require that, at some point, a metal-to-ceramic attachment or joint will be necessary. This may be accomplished either by an attachment such as a weld, or a sealed compression joint. This DDN is written on the basis that an attachment rather than a sealed joint will be required and that a commercial method can be developed which will create a weldable joint between the ceramic decomposer elements and metallic Decomposer tube sheet or vessel wall. Creating a transition zone in the ceramic elements will allow the elements to be directly welded to the tube sheet and eliminate the need for gaskets or seals.

2. Current Data Base Summary

There is limited development of weldable ceramic transitions for the chemical process industries including ethylene furnace design. This work is currently being carried out by the Shaw Group, Inc. in cooperation with TWI, Ltd., World Centre for Materials Joining Technology. Prototype welded pieces have been fabricated and are currently being tested in a test furnace.

3. Summary of Data Needed

This effort complements that in DDN HPS-04-02 and 04-03. Candidate ceramic materials evaluated in DDN HPS-04-02 will serve as the donor material for constructing a metallic transition zone capable of being welded. The welded joints are to be exposed to conditions and stresses representative of the operating conditions in the Decomposer. The test will evaluate the strength and consistency of the metal-to-ceramic bonding.

4. Designer's Alternatives

The alternatives to a weldable ceramic transition element are gaskets or seals evaluated as part of DDN-HPS-04-05. An all metal design, another alternative, may not be practicable.

5. Selected Design Approach and Explanation

The selected design approach uses sealing materials and compression joints to seal the ceramic tubes to the tubesheet and does not require a weldable transition element. This effort serves as a possible alternative to such seals.

6. Schedule Requirements

This work can begin only after candidate ceramic materials are identified and therefore must follow at least the initial stages of the work for DDNs HPS-04-02. It must be completed before the fabrication of the pilot plant Decomposer and must therefore be complete before the end of the fourth year of the NGNP technology development program.

7. Priority

Urgency (1-5)	2
Cost-Benefit (Low, Medium, High)	Medium
Uncertainty in Existing Data (Low, Medium, High)	Medium
Importance of New Data (Low, Medium, High)	Medium

8. Fallback Position and Consequences of Non-Execution

Non-execution of this task would require an all-metal design or a design approach using gaskets or seals.

9. References

None

DDN HPS–04-05 DEVELOP MATERIALS TO SEAL THE CERAMIC JOINTS BETWEEN THE DECOMPOSER ELEMENTS AND THE METALLIC TUBE SHEET OR VESSEL

1. Assumptions

A sealed joint will be required in the design of the Decomposer, the Concentrator or in the interface between these units. Candidate sealing materials will be ceramics, cermets,

2. Current Data Base Summary

Traditional methods of evaluating materials used for sealing elements involve the use of ASTM or other standard immersion tests. Immersion test data may be available for candidate sealing materials, however, candidates have not yet been identified nor has a database been gathered. It is doubtful whether sealing materials have been tested under operating conditions representative of the Decomposer or Concentrator.

3. Summary of Data Needed

A database is to be assembled of the performance of sealing materials under operating conditions representative of the Decomposer and Concentrator. The database is to be screened for candidates which might perform well in these conditions. Candidate materials are to be screened using immersion tests. The best performing candidates are to be tested as a seal in a representative environment under pressure representing the intended service. Adequate life testing is to be carried out such that the seal life can be estimated. Consideration should be given to using the pilot plant for seal life testing of the best candidates.

4. Designer's Alternatives

The alternative to gaskets or seals is a weldable ceramic transition element evaluated in the work for DDN HPS-04-04. An all metal, all welded design, another alternative, may not be practicable.

5. Selected Design Approach and Explanation

The design approach selected for the Preconceptual Design is one that employs sealed joints between ceramic and metal parts of the Decomposer. Other joints or attachments have not yet been considered.

6. Schedule Requirements

Assembling a database and even seal testing can begin immediately. A reasonably good set of candidate materials and seal designs must be ready for testing in the pilot plant at the beginning of the fifth year of the technology development program.

7. Priority

Urgency (1-5)	2
Cost-Benefit (Low, Medium, High)	High

Uncertainty in Existing Data (Low, Medium, High)	High
Importance of New Data (Low, Medium, High)	Medium

8. Fallback Position and Consequences of Non-Execution

Non-execution of this task would require an alternative design approach for the pilot plant, as described above, or testing of sealing materials in the pilot plant without prior screening or testing.

9. References

None

DDN HPS-04-06 TEST A PILOT-SCALE DECOMPOSER

1. Assumptions

Pilot testing entails testing of a unit constructed from materials expected to be used in commercial units. A fully integrated pilot plant would be ideal, but may not be required. Location of the two units will depend upon the availability of suitable support facilities. The pilot unit will probably consist of a Concentrator, Decomposer, and SO_2 Absorbers. However, due to the complex nature of the Decomposer, it may be necessary to run this unit operation in an independent fashion in a location that can accept the effluent stream. One possibility is a sulfuric acid plant. The unit does not need to be integrated with the electrolyzers, although sulfurous acid produced here should be used in the electrolyzers. The liquid can be shipped to the electrolyzer pilot plant. For planning purposes, it has been assumed that both pilot facilities would be at the same location, alleviating the need to transfer sulfuric acid and decomposer effluent from site to site.

2. Current Data Base Summary

Available information on this technology can be considered only as background for pilot plant work. An appropriate database will be developed as the technology development program progresses.

3. Summary of Data Needed

This phase of the program entails designing, building and operating scaled equipment to procure the design data required to develop a full scale decomposition unit. Key objectives include verification of the conceptual configuration, operation for long duration at steady state with industrial feeds and chemicals, verification that decomposition results, catalyst life, and other key parameters can be achieved for long duration runs.

This effort will involve analyzing the data produced. This includes experience in fabricating special equipment that can be applied to the fabrication of full-scale equipment. Operating data must be analyzed to determine whether any additional bench-scale work or engineering work must be done. Additional catalyst development may be required or steady-state and dynamic simulations adjusted.

However the Electrolyzer and Decomposer pilot units are located with respect to one another or however their capacities may differ, the product from each should be used in the operation of the other to determine the effect of impurity accumulation in the recycle stream. The scale of the equipment must be adequate to provide assurance and design data to the engineer of the full-scale unit so that a successful commercial design will result.

4. Designer's Alternatives

The designer may depend upon bench-scale work and process simulations to produce a design. Although this is possible, it carries a great schedule and cost risk.

5. Selected Design Approach and Explanation

The selected design approach is to produce a Conceptual Design with the available data at the outset of the program and, by so doing, identify additional technology development tasks. Engineers will monitor the technology effort closely and adjust the design until the design of the pilot plant must be developed. Design of the pilot plant should be carried out by the same team of engineers and they should continue to monitor the fabrication of equipment and the startup and operation of the pilot plant. Data gathered from these efforts will be used in the design of the demonstration plant.

6. Schedule Requirements

Design of the pilot plant must await some crucial technology development in catalyst and materials. For proper information gathering, it should also be designed and operated in conjunction with the Electrolyzer pilot unit even though they may be located separately.

7. Priority

Urgency (1-5)	3
Cost-Benefit (Low, Medium, High)	Medium
Uncertainty in Existing Data (Low, Medium, High)	High
Importance of New Data (Low, Medium, High)	High

8. Fallback Position and Consequences of Non-Execution

Although it may be conceivable to develop a design without carrying out pilot plant testing of the Decomposer, such an approach would carry an extraordinary risk and should not be attempted. There is, in effect, no practical fallback.

9. References

None

DDN HPS–04-07 PROVIDE DATA SUPPORTING DESIGN CODE CASE

1. Assumptions

The current codes for heat exchangers and pressure vessels are expected not to address the materials and the design conditions of the Decomposer. The Decomposer design is assumed to share at least materials and design conditions with the IHX. Therefore this task is to be carried out in conjunction with those specified for developing a design code case for the IHX. It assumes that those tasks will be performed as specified and that some of the results will be applicable to the design of the Decomposer. Specifically, this DDN is intended to supplement DDN HTS-01-18, Materials Code Case for the Intermediate Heat Exchanger, (IHX), and DDN-HTS-01-19, Design Code Case, as presented in Section 6 (Reference 1) for any design code case data needs for the Decomposer and Concentrator not covered in those DDNs.

2. Current Data Base Summary

Both ceramic materials and bonding methods must be coded or otherwise certified for reliable and repeatable use in a commercial industrial environment. A survey of existing of code materials must be made for use in the decomposer environment, upstream and downstream of the decomposer heat transfer surfaces.

3. Summary of Data Needed

Once a Decomposer mechanical design is prepared and it is determined that the design falls outside the applicable ASME Sec. VIII pressure vessel code and that no design code case is available for this application, then a code case request is prepared that addresses all aspects of the Decomposer design. As a part of that request, certain data will be required that will be identified in the preparation of the code case request. This DDN is intended to identify that data. This DDN cannot be completed until the process design and the mechanical design of the Decomposer are attempted and the code case request prepared. The data needs for the IHX code case should first be examined so that no duplication of effort occurs.

4. Designer's Alternative's

It is expected that the Decomposer and Concentrator will require code stamps. If they are not already covered by a code case, one will have to be prepared. There is no design alternative.

5. Selected Design Approach and Explanation.

The proposed approach is to obtain an adequate database for design, analysis and test evaluation of compact heat exchangers using the selected structural alloy and to support the development of ASME Section II and Section VIII code cases for the material and design.

6. Schedule Requirements

The code case request can be initiated only after the Decomposer mechanical design is complete. The code case must be approved before the final mechanical design of the demonstration plant Decomposer is started or, preferably, before the pilot plant Decomposer is designed.

7. Priority

Urgency (1-5)	3
Cost-Benefit (Low, Medium, High)	Low
Uncertainty in Existing Data (Low, Medium, High)	High
Importance of New Data (Low, Medium, High)	Medium

8. Fallback Position and Consequences of Non-Execution

There is no fallback position, as a code stamp will be required for the Decomposer and the Concentrator.

9. References

None

7.4.5 Sulfuric Acid Concentrator DDN

The Concentrator is in concept a simple stripper. Its operation, however, is closely integrated with the Decomposer and the H_2SO_4 Concentrator Recuperator (Recuperator). It is very difficult and perhaps impractical to control the Concentrator independently of the Decomposer. Thus if the Concentrator is less efficient than expected, the system energy efficiency will suffer. Design conservatism could compensate for lack of knowledge, but in the case of the Concentrator, conservatism is very costly. Moreover, large-scale experience with this chemical system operating under these conditions does not exist. There is no basis for determining the amount of conservatism to use. Choice of packing may also be very important in the cost of the Concentrator. Savings in the height of this column may justify selecting an effective, but expensive packing. Alternatives to a packed column are currently being investigated including incorporating this function into the Decomposer tubes.

7.4.5.1 Functions

To strip water from the incoming acid feed and produce a feed at the proper concentration and temperature for the Decomposer

To quench the effluent gases from the Decomposer and feed them at the proper temperature to the Recuperator.

7.4.5.2 Key Requirements

Accept sulfuric acid feed at approximately 50 weight % acid and concentrate it to approximately 85 weight %.

Accept sulfuric acid feed at approximately 200ºC from the Recuperator and send it to the Decomposer at approximately 525ºC.

Accept Decomposer effluent at approximately 875ºC and send it to the Recuperator at approximately 335ºC

Operate at approximately 8.7 MPa.

7.4.5.3 Design Data Needs

One DDN has been identified for the purpose of determining the proper type and quantity of packing for the Concentrator. If an alternative design is chosen, this DDN could change. Nevertheless, some testing of the Concentrator function, however it is accomplished, is to be carried out. See Table 7.4-5.

Table 7.4-5: Design Data Needs for the Sulfuric Acid Concentrator

DDN	Title
HPS-05	**Sulfuric Acid Concentrator**
HPS-05-01	Measure the Height Equivalent to a Theoretical Plate (HETP) for the Concentrator

HPS-05-01: MEASURE THE HEIGHT EQUIVALENT TO A THEORETICAL PLATE FOR THE CONCENTRATOR

1. Assumptions

It is assumed that facilities can be found that can operate at the high temperatures and pressures required to test candidate packing prior to the startup of the pilot plant. If this assumption is not correct, the packing could be tested in the pilot plant. The pilot plant design and testing schedule would have to be modified to accommodate this.

2. Current Database Summary

None

3. Summary of Data Needed

Proposed packing, either dumped or structured, is to be tested to determine the Height Equivalent To A Theoretical Plate (HETP) and flooding conditions for these chemical components operating at the proposed temperatures and pressures.

4. Designer's Alternatives

Stripping is required to raise the feed concentration from 50 weight % to 85 weight %. There are alternatives to effect this countercurrent interphase mass transport. Currently a design is being investigated which would integrate the Concentrator function into the Decomposer tubes. This design would require testing and this DDN would be changed accordingly.

5. Selected Design Approach and Explanation

The design approach is to use a packed column for the Concentrator and to test a few selected packing materials to determine the size and type of packing to be used and thus fix the size of the Concentrator vessel.

6. Schedule Requirements

If appropriate facilities can be found, this testing can begin immediately following or perhaps shortly before the end of Conceptual Design. If proper facilities cannot be found, packing can be tested in the Decomposer pilot plant. Adequate data should be available at the beginning of Preliminary Design or shortly thereafter.

7. Priority

Urgency (1-5):	2-4
Cost-Benefit (Low, Medium, High):	High
Uncertainty in Existing Data (Low, Medium, High):	High
Importance of New Data (Low, Medium, High):	Medium

8. Fallback Position and Consequences Of Non-Execution

Based on the properties of the chemical system as determined in DDN HPS-01-01, appropriate packing height can be estimated. With no operating experience with this chemical system operating under these conditions, determining an adequate design safety factor would be difficult. Conservatism in this design would be quite costly.

9. References

None

7.4.6 SO_2 Absorber DDN

The operation of the SO_2 Absorbers is important for several reasons. Inadequate absorption will result in higher losses of sulfur dioxide to the Product Purification System. Without correction, this would lead to a gradual depletion of acid in the system. The Preconceptual Design has five stages of absorption operating at different temperatures and with different acid concentrations in the solvent. Alternative designs seek to simplify this scheme. Nevertheless, measurement of packing characteristics is recommended.

7.4.6.1 Functions

To remove sulfur dioxide from the oxygen/ sulfur dioxide/ water stream from the SAD.

To provide a solution containing the proper amount of sulfur dioxide to each stage of Electrolyzer.

7.4.6.2 Key Requirements

Accept a stream of sulfur dioxide and oxygen at approximately 50 weight % sulfur dioxide at 72ºC and 4 MPa.

Absorb sulfur dioxide in streams of sulfuric acid at various concentrations (See Section 7.3.3.4.1**,** and Appendix C) and remove sulfur dioxide so that the sulfur dioxide in the oxygen stream to the Product Purification System is not more than about 5.3 weight % sulfur dioxide. The last stage of absorption uses water at 31ºC. Absorption takes place at about 4 MPa.

7.4.6.3 Design Data Needs

One DDN has been identified for the purpose of determining the proper type and quantity of packing for the SO_2 Absorbers. If an alternative design is chosen, this DDN could change. Nevertheless, testing of the SO_2 Absorber function is recommended. See Table 7.4-6.

Table 7.4-6: Design Data Needs for the SO2 Absorbers

DDN	Title
HPS-06	**SO_2 Absorber**
HPS-06-01	Measure the Height Equivalent to a Theoretical Plate (HETP) for the SO2 Absorbers

HPS-06-01: MEASURE THE HEIGHT EQUIVALENT TO A THEORETICAL PLATE) FOR THE SO_2 ABSORBERS

1. Assumptions

It is assumed that facilities can be found that can operate at the high pressures required to test candidate packing prior to the startup of the pilot plant. If this assumption is not correct, the packing could be tested in the pilot plant. The pilot plant design and testing schedule would have to be modified to accommodate this.

2. Current Database Summary

None

3. Summary of Data Needed

Proposed packing, either dumped or structured, is to be tested to determine the Height Equivalent To A Theoretical Plate (HETP) and flooding conditions for these chemical components operating at the proposed temperatures and pressures.

4. Designer's Alternatives

Absorption of sulfur dioxide out of the product oxygen stream is essential to the HyS Process. The designer may select any form of liquid/ vapor contacting device to carry this out. In general, it has been found that packed columns are well-suited for this service and are less complex and less costly than the alternatives.

5. Selected Design Approach and Explanation

The design approach is to select a packed column for the SO_2 Absorbers and to test packing materials to determine the size and type of packing to be used and thus the size of the SO_2 Absorber vessels.

6. Schedule Requirements

If appropriate facilities can be found, this testing can begin immediately following or perhaps shortly before the end of Conceptual Design. If proper facilities cannot be found, packing can be tested in the Decomposer pilot plant. Adequate data should be available at the beginning of Preliminary Design or shortly thereafter.

7. Priority

Urgency (1-5):	2-4
Cost-Benefit (Low, Medium, High):	Medium
Uncertainty in Existing Data (Low, Medium, High):	High
Importance of New Data (Low, Medium, High):	Medium

8. Fallback Position and Consequences Of Non-Execution

Based on the properties of the chemical system as determined in DDN HPS-01-01, appropriate packing height can be estimated. With no operating experience with this chemical system operating under these conditions, determining an adequate design safety factor would be difficult.

9. References

None

7.4.7 Electrolyzers DDNs

The Electrolyzers are one of the two key unit operations that make up the HyS process. The HyS Electrolyzer uses a sulfur dioxide depolarized anode. Separate liquid streams feed the electrolyzers and are referred to as the catholyte and the anolyte. The catholyte is a solution of sulfuric acid and water and the anolyte is a solution of sulfuric acid, water, and dissolved sulfur dioxide. Sulfur dioxide is oxidized at the anode to produce sulfuric acid and hydronium ions (protons). The outlet anolyte stream has a higher concentration of sulfuric acid than the inlet anolyte stream. The protons produced at the anode transport as hydronium ions across the cation-exchange membrane into the catholyte and are reduced at the cathode to produce hydrogen gas. The following are the relevant reactions in this process:

Anode reaction: $SO_2\,(aq) + 2H_2O \rightarrow H_2SO_4 + 2H^+ + 2e^-$

Cathode reaction $2H^+ + 2e^- \rightarrow H_2\,(g)$

Overall reaction $SO_2\,(aq) + 2H_2O \rightarrow H_2SO_4 + H_2\,(g)$

Based on original work by Westinghouse and more recent work by Savannah River National Laboratory (SRNL), the voltage for the overall reaction, (shown above), is roughly 0.88 V with metal electrodes used to avoid sulfuric acid corrosion. The voltage includes IR losses through the membrane and cells for operation at 50°C.

Testing by Westinghouse indicated the anode over-potential decreased with increased temperature, indicating that higher electrical efficiency might occur at higher operating temperature. However, there was little or no improvement in the limiting current with increased temperature at atmospheric pressure. The lack of improvement in the limiting current arises primarily from the reduced solubility of sulfur dioxide at higher temperatures. To overcome this, Westinghouse operated the electrolyzer at elevated pressure. At about 20 bar the solubility of the sulfur dioxide was sufficient to allow operation at the higher current density and low anode potential to achieve increased electrical efficiencies.

Two slightly different cells were designed, built and tested in the Savannah River tests. The first electrolyzer was based on a commercial Proton Exchange Membrane (PEM) water electrolyzer manufactured by Proton Energy Systems, Inc. (PES). The PES electrolyzer was built with Hastelloy B and Teflon wetted parts, a PEM electrolyte, and porous titanium electrodes. The second electrolyzer was assembled for SRNL by the University of South Carolina. It was constructed of platinized carbon cloth electrodes, a Nafion 115 PEM electrolyte, carbon paper flow fields, and solid graphite back plates. Proof-of-concept testing was performed on each electrolyzer at near-ambient pressure and room temperature under various feed conditions. Operation was evidenced by hydrogen production at the cathode and sulfuric acid production at the anode (witnessed by the absence of oxygen generation) and with cell voltages substantially less than the theoretical reversible voltage for simple water electrolysis (1.23 V). Cell

performance at low currents equaled or exceeded that achieved in the Westinghouse cells. Performance at higher currents was less efficient due to mass transfer and hydraulic issues associated with the use of cells not optimized for liquid feed.

The PES cell failed after several days of operation due to internal corrosion of the titanium electrodes in the presence of sulfuric acid. Although it was anticipated that the titanium would react in the presence of acid, the rapid deterioration was unexpected. The University of South Carolina cell was constructed of carbon-based components and had excellent corrosion resistance. However, it was a modified design originally based on gaseous reactants, and it had poor mass transfer characteristics using liquid sulfuric acid feed with dissolved sulfur dioxide. Weidner (Reference 4) also tested an alternate concept for hydrogen production using a sulfur dioxide depolarized anode. His cell used the membrane electrode assembly concept where the electrodes were carbon with platinum catalyst.

Process development work at SRNL has progressed to the point of initial efforts at cell system scale up such that arrangements with outside fabricators are needed to develop commercial concept cell stacks. Longer term life cycle testing is planned as well as additional material evaluations and continued process assessments. Resolution of flow scheme operating concerns and means of maximizing efficiency needs to be addressed.

7.4.7.1 Functions

To oxidize dissolved sulfur dioxide to form sulfuric acid and hydronium ions.

To reduce protons and produce hydrogen gas.

7.4.7.2 Key Requirements

Accept a stream of sulfuric acid and water containing dissolved sulfur dioxide at various concentrations and temperatures between about 45°C and 90°C.

Carry out the reactions described above at about 4MPa and with approximately a 25% per-pass conversion.

7.4.7.3 Design Data Needs

A total of 6 DDNs have been identified for the Electrolyzer. These are directed at developing an electrolysis catalyst with adequate life and an adequate membrane which transmits hydronium ions from the anolyte to the catholyte and serves as a barrier to sulfur migration. The DDNs also serve to map out the development path for scaling up the electrolytic cells from a single bench-scale cell to commercial scale mass-produced cells arranged in stacks suitable for an economic industrial installation. The DDNs aimed at accomplishing this are listed in Table 7.4-7 below.

Table 7.4-7: Design Data Needs for the Electrolyzers

DDN	Title
HPS-07	**Electrolyzers**
HPS-07-01	Optimize Catalyst Loading in the Electrodes
HPS-07-02	Develop a Cell Membrane
HPS-07-03	Develop a Cell Configuration and Materials
HPS-07-04	Build and Test a Prototype Cell
HPS-07-05	Build and Test a Pilot-scale Cell
HPS-07-06	Build and Test a Stack of Cells in a Pilot Plant

DDN HPS–07-01: OPTIMIZE CATALYST LOADING IN THE ELECTRODES

1. Assumptions

In the most recent electrolyzer studies conducted at the Savannah River National Laboratory (SRNL), the anode and cathode were finely divided platinum catalyst, on porous carbon or titanium. The assumption for this work is that the catalyst will be platinum or a similar Group VIII metal.

2. Current Data Base Summary

Platinum or platinized carbon cloth has been used as catalyst in laboratory testing. Palladium has been tested and shown to be inferior to platinum (Reference 5). Water electrolysis cells also use platinum catalyst.

3. Summary of Data Needed

Optimization of platinum catalyst loading on the electrodes is the first priority. It will be important to minimize the cost of the Electrolyzers without unduly diminishing performance. The target per-pass conversion is 25%. In addition, candidates other than platinum should be investigated.

A sulfur dioxide oxidation catalyst with an adequate life of (about 20,000 hours) needs to be developed. Catalyst studies would include long-term testing of existing attractive options and continued testing of new candidate options, assessment of commercial suppliers' interest in providing catalyst systems for the process and evaluation of catalyst/substrate options with regard to the electrolyzer design. Close cooperation with the electrolyzer manufacturer will be required for successful completion.

It is anticipated that differential reactors will be used, at least initially, to evaluate candidate catalysts. Differential reactors present a number of attractive features. First of all, each run gives directly a value for the rate of reaction and requires substantially less catalyst to provide a rate of reaction. Other points in favor of a differential reactor are that multiple catalysts can be tested in parallel and they are easier to keep isothermal because of the low conversion of the reactant. A drawback, however, is the low conversion obtained in the reactor. This requires more sensitive analytical techniques to measure.

Initial testing will be conducted in the temperature range from 30º to 100 ºC at a pressure of 4MPa. A key parameter in this study will be the catalyst on an appropriate substrate.

4. Designer's Alternatives

A catalyst for this application is necessary. Alternatives include various loading levels of platinum catalyst or other options not yet identified.

5. Selected Design Approach and Explanation

The CHEMCAD® process simulation model for the HyS process converged successfully for a conceptual design. However, the designs were based thermodynamic data which did not reflect the impact of a catalyst on hydrogen production. A per-pass conversion of 25% was chosen as a reasonable assumption for the sake of the Preconceptual Design. Selection and testing of a catalyst will enable a more accurate estimate to be made of an expected per-pass conversion and the size of the equipment for the electrolysis unit operations.

6. Schedule Requirements

Development of an economic electrolyzer for the HyS process including pilot testing is very close to being on the critical path for the NGNP project. Early catalyst loading and life tests are necessary to meet the project schedule with this technology.

7. Priority

Urgency (1-5):	1
Cost-Benefit (Low, Medium, High)	High
Uncertainty in Existing Data (Low, Medium, High)	High
Importance of New Data (Low, Medium, High)	High

8. Fallback Position and Consequences of Non-Execution

The fallback position is to use a non-optimal catalyst loading which would result in a penalty either in capital cost or reduced performance.

9. References

1. J.L. Steimke and T.J. Steeper, "Characterization Testing of H_2O-SO_2 Electrolyzer at Ambient Pressure", Savannah River National Laboratory Report, WSRC-TR-2005-00310, Rev. 0, August 1, 2005.

2. G. H. Farbman, "The Conceptual Design of an Integrated Nuclear Hydrogen Production Plant Using the Sulfur Cycle Water Decomposition System," NASA Contractor Report, NASA-CR-134976, 1976.

3 P.W.T. Lu, "Technological Aspects of Sulfur Dioxide Depolarized Electrolysis for Hydrogen Production," Int. J. Hydrogen Energy, Vol. 8, No. 10, pp. 563-575, 1983.

4. J. W. Weidner, "Electrochemical Generation of Hydrogen via Thermochemical Cycles," AIChE Spring National Meeting, Atlanta, April 12, 2005.

5. W.A. Summers, "Hybrid Sulfur Cycle," SRNL, NHI Semiannual Program Review, Germantown, MD, October 31, 2006.

DDN HPS-07-02 DEVELOP A CELL MEMBRANE

1. Assumptions

The most significant information has been developed by the Savannah River National Laboratory (SRNL) (Reference 1). For the purpose of initiating a test program in this area, it can be assumed that the membrane development effort will begin with the approach utilized by SRNL, i.e., working with commercial vendors and universities to develop not only membranes but also the cells.

2. Current Data Base Summary

A list of candidate membranes has been developed by Savannah River National Laboratory (Reference 1).

3. Summary of Data Needed

Find or develop a PEM material with good chemical stability in sulfuric acid, good ionic conductance and diffusion properties and minimal sulfur dioxide transport

4. Designer's Alternatives

The alternative to further searching for an appropriate membrane is to use one of those already identified and tested. Nafion® 115 has been used most extensively in testing thus far. There is however, some migration of sulfur across the membrane and contamination of the hydrogen product is a concern. Purification of the product using the usual industrial means would be required.

5. Selected Design Approach and Explanation

The current design approach is to provide facilities for removing sulfur from the product hydrogen. If a membrane can be found that is impervious to sulfur species, this costly approach can be abandoned.

6. Schedule Requirements

Development of an economic electrolyzer for the HyS process including pilot testing is very close to being on the critical path for the NGNP project. Early membrane selection is necessary to meet the project schedule with this technology.

7. Priority

Urgency (1-5)	1
Cost-Benefit (Low, Medium, High)	High
Uncertainty in Existing Data (Low, Medium, High)	High
Importance of New Data (Low, Medium, High)	High

8. Fallback Position and Consequences of Non-Execution

The fallback is the current design approach. Failure to find a suitable membrane impervious to sulfur species will require either expensive clean-up or will render the product less useful.

9. References

1. W.A. Summers, "Hybrid Sulfur Cycle," SRNL, NHI Semiannual Program Review, Germantown, MD, October 31, 2006.

2. J.L. Steimke and T.J. Steeper, "Characterization Testing of H_2O-SO_2 Electrolyzer at Ambient Pressure", Savannah River National Laboratory Report, WSRC-TR-2005-00310, Rev. 0, August 1, 2005.

3. G. H. Farbman, "The Conceptual Design of an Integrated Nuclear Hydrogen Production Plant Using the Sulfur Cycle Water Decomposition System," NASA Contractor Report, NASA-CR-134976, 1976.

4. P.W.T. Lu, "Technological Aspects of Sulfur Dioxide Depolarized Electrolysis for Hydrogen Production," Int. J. Hydrogen Energy, Vol. 8, No. 10, pp. 563-575, 1983.

5. J. W. Weidner, "Electrochemical Generation of Hydrogen via Thermochemical Cycles," AIChE Spring National Meeting, Atlanta, April 12, 2005.

DDN HPS-07-03 DEVELOP A CELL CONFIGURATION AND MATERIALS

1. Assumptions

In our modeling efforts to date it has been assumed that the electrolysis units satisfied the following requirements:

- Adequate space for gas/liquid disengagement
- Adequate space to house cells
- Adequate residence time
- Electrical connections to the cells in a sealed vessel at elevated pressure
- Adequate flow distribution
- Access for maintenance and replacement of cells

2. Current Data Base Summary

Cell development work has been carried out by Savannah River National Laboratory (SRNL) and by Giner Electrochemical Systems, LLC (Giner) under contract to SRNL. The latest reports of this work are contained in References 1 and 2.

3. Summary of Data Needed

This effort will develop 2 or 3 competitive configurations for a working cell analogous to the technologies used in the chlor alkali industry. A selection of a leading technology will then be made for the path forward. In support of this effort, materials evaluations will have to be made. This task will be directed at proof-of-principle testing and initial duration tests at atmospheric pressure. Conductivity and diffusion coefficient data will be gathered as well as initial indications of sensitivity to dissolved cations in the catholyte and anolyte. This test should demonstrate that transport of sulfur species across the membrane can be prevented.

4. Designer's Alternatives

There are no currently no designer alternatives. An electrolytic cell of some description will have to be developed for this technology.

5. Selected Design Approach and Explanation

The tentative design approach used in the Preconceptual Design includes the use of Nafion® membranes, cells constructed of graphite or PTFE wetted parts, and platinum catalyst. No further definition has been attempted.

6. Schedule Requirements

Development of an economic electrolyzer for the HyS process including pilot testing is very close to being on the critical path for the NGNP project. Early cell development is necessary to meet the project schedule with this technology. Cell development cannot be completed until membrane selection and catalyst loading tests have been complete. Preliminary work, however, can be started.

7. Priority

Urgency (1-5)	1
Cost Benefit (Low, Medium, High)	High
Uncertainty in Existing Data (Low, Medium, High)	Medium
Importance of New Data (Low, Medium, High)	High

8. Fallback Position and Consequences of Non-Execution

There is no fallback position; a cell configuration for the HyS process is required

9. References

1. W.A. Summers, "Hybrid Sulfur Cycle," SRNL, NHI Semiannual Program Review, Germantown, MD, October 31, 2006.

2. J.L. Steimke and T.J. Steeper, "Characterization Testing of H_2O-SO_2 Electrolyzer at Ambient Pressure", Savannah River National Laboratory Report, WSRC-TR-2005-00310, Rev. 0, August 1, 2005.

3. G. H. Farbman, "The Conceptual Design of an Integrated Nuclear Hydrogen Production Plant Using the Sulfur Cycle Water Decomposition System," NASA Contractor Report, NASA-CR-134976, 1976.

4 P.W.T. Lu, "Technological Aspects of Sulfur Dioxide Depolarized Electrolysis for Hydrogen Production," Int. J. Hydrogen Energy, Vol. 8, No. 10, pp. 563-575, 1983.

5. J. W. Weidner, "Electrochemical Generation of Hydrogen via Thermochemical Cycles," AIChE Spring National Meeting, Atlanta, April 12, 2005.

DDN HPS- 07-04 BUILD AND TEST PROTOTYPE CELLS

1. Assumptions

Materials of construction and configuration selected in the work for DDN HPS-07-03 are satisfactory for a prototype cell.

2. Current Data Summary

Some work on developing a prototype cell has been initiated by Giner Electrochemical Systems, LLC (Giner) under contract to Savannah River National Laboratory, but this has not been reported in the literature.

3. Summary of Data Needed

Develop and demonstrate a 1/10 scale prototype element (approximately 0.1 – 0.2 m^2 active area per cell with 3 cells cascaded to generate hydrogen at 300 psi (~2.1 MPa), i.e., capable of generating hydrogen at pressure. This phase culminates in a demonstration of the working electrolyzer using 1/10 scale hardware. The cell should operate approximately 6 months to demonstrate materials of construction, operating efficiency, durability and capacity. This test should demonstrate that transport of sulfur species across the membrane at high operating pressures can be prevented. Fabrication techniques for the cell stacks and integrated electrolyte vessels must be developed at this point in the program. This may include consideration of special vessel lining techniques or materials. This work will identify any need to modify the original prototype design and thus lead to a viable manifold candidate. Prototype cell operation should continue during construction and testing of the pilot-scale cell and the pilot plant to demonstrate catalyst life. The target should be better than 20,000 hours.

4. Designer's Alternatives

No alternatives have yet been developed.

5. Selected Design Approach and Explanation

The tentative design approach used in the Preconceptual Design includes the use of Nafion® membranes, cells constructed of graphite or PTFE wetted parts, and platinum catalyst. No further definition has been attempted.

6. Schedule Requirements

Work on this task is scheduled to begin approximately 24 months into the program. Although preliminary work can begin prior to the development of a cell configuration, the prototype cells should not be constructed until that configuration is fixed.

7. Priority

Urgency (1-5)	2
Cost Benefit (Low, Medium, High)	High
Uncertainty in Existing Data (Low, Medium, High)	High
Importance of New Data (Low, Medium, High)	Medium

8. Fallback Position and Consequences of Non-Execution

The fallback is to proceed to the pilot-scale cell development directly without building a 1/10 scale prototype. If the pilot scale cell were not successful, this could cause unnecessary delays and costs.

9. References

1. J.L. Steimke and T.J. Steeper, "Characterization Testing of H_2O-SO_2 Electrolyzer at Ambient Pressure", Savannah River National Laboratory Report, WSRC-TR-2005-00310, Rev. 0, August 1, 2005.

2. G. H. Farbman, "The Conceptual Design of an Integrated Nuclear Hydrogen Production Plant Using the Sulfur Cycle Water Decomposition System," NASA Contractor Report, NASA-CR-134976, 1976.

3 P.W.T. Lu, "Technological Aspects of Sulfur Dioxide Depolarized Electrolysis for Hydrogen Production," Int. J. Hydrogen Energy, Vol. 8, No. 10, pp. 563-575, 1983.

4. J. W. Weidner, "Electrochemical Generation of Hydrogen via Thermochemical Cycles," AIChE Spring National Meeting, Atlanta, April 12, 2005.

5. W.A. Summers, "Hybrid Sulfur Cycle," SRNL, NHI Semiannual Program Review, Germantown, MD, October 31, 2006.

DDN HPS-07-05 BUILD AND TEST A PILOT-SCALE CELL

1. Assumptions

The cell materials including wetted parts, membrane, and catalyst have been selected and have been shown to be satisfactory in the prototype testing. (See DDNs HPS-07-01 through 04)

2. Current Data Base Summary

No database has been yet collected for pilot-scale cell development for this process.

3. Summary of Data Needed

The objective of this task will be to develop and demonstrate a single cell electrolyzer at full scale (~ 1 ½ to 3 m^2) active area as an expansion of that tested in the previous phase. The cell will be operated for approximately 6 months demonstrating materials of construction, operating efficiencies, operation at pressure, capacity, and fabrication at full size. Part of this operation will be an evaluation of operating pressure and the H_2 product conditions and their effect on cell operation.

4. Designer's Alternatives

No alternatives have yet been developed.

5. Selected Design Approach and Explanation

The tentative design approach used in the Preconceptual Design includes the use of Nafion® membranes, cells constructed of graphite or PTFE wetted parts, and platinum catalyst. No further definition has been attempted.

6. Schedule Requirements

Work on this task is scheduled to begin approximately 42 months into the program. It should not, however, begin until adequate assurance of success has been obtained from prototype cell testing.

7. Priority

Urgency (1-5)	3
Cost Benefit (Low, Medium, High)	Medium
Uncertainty in Existing Data (Low, Medium, High)	High
Importance of New Data (Low, Medium, High)	Medium

8. Fallback Position and Consequences of Non-Execution

The fallback position is to proceed directly from prototype work to building a stack of cells in a pilot plant without building and testing a single cell. This would be unlikely since full-scale cells must be built to produce a stack. It is ill-advised to proceed to a pilot plant without first testing the first full-scale cell, although that testing might be curtailed.

9. References

1. J.L. Steimke and T.J. Steeper, "Characterization Testing of H_2O-SO_2 Electrolyzer at Ambient Pressure", Savannah River National Laboratory Report, WSRC-TR-2005-00310, Rev. 0, August 1, 2005.

2. G. H. Farbman, "The Conceptual Design of an Integrated Nuclear Hydrogen Production Plant Using the Sulfur Cycle Water Decomposition System," NASA Contractor Report, NASA-CR-134976, 1976.

3 P.W.T. Lu, "Technological Aspects of Sulfur Dioxide Depolarized Electrolysis for Hydrogen Production," Int. J. Hydrogen Energy, Vol. 8, No. 10, pp. 563-575, 1983.

4. J. W. Weidner, "Electrochemical Generation of Hydrogen via Thermochemical Cycles," AIChE Spring National Meeting, Atlanta, April 12, 2005.

5. W.A. Summers, "Hybrid Sulfur Cycle," SRNL, NHI Semiannual Program Review, Germantown, MD, October 31, 2006.

HPS-07-06 BUILD AND TEST A STACK OF CELLS IN A PILOT PLANT

1. Assumptions

All long-term cell testing including the prototype cell and the full-scale pilot cell has been completed successfully.

2. Current Data Base Summary

No database has been yet collected for pilot-plant development for this process.

3. Summary of Data Needed

Manufacturing capabilities for the membranes may need to be developed. Materials available in small quantities for electrolyzer R&D may have to be manufactured on a commercial basis. This may require some R&D on the part of the manufacturer. Likewise, fabrication capabilities for the cell stacks and integrated electrolyte vessels must be developed. This may include special vessel lining techniques or materials.

Develop and demonstrate a 10 to 20 element pilot plant electrolyzer (approximately 30 m^2 active area) as an expansion of the single cell pilot-scale tests. It would be built for operation in an industrial environment either at a sulfuric acid production facility or at the NGNP site to demonstrate the long term performance characteristics. The Electrolyzer pilot plant should be integrated with the Decomposer pilot plant to demonstrate integrated operation and the effect of system impurities on the various components (See DDNs HPS-03-01 and 02). This pilot unit may be expanded and used as one of the Electrolyzer units in the demonstration plant.

4. Designer's Alternatives

Design alternatives for the pilot plant have not yet been developed.

5. Selected Design Approach and Explanation

The tentative design approach used in the Preconceptual Design includes the use of Nafion® membranes, cells constructed of graphite or PTFE wetted parts, and platinum catalyst. No further definition has been attempted.

6. Schedule Requirements

Work on this Task is scheduled to begin approximately 84 months into the project. It should, however, follow the testing of a single pilot-scale cell and should be scheduled to operate simultaneously with the Decomposer pilot unit, even though they may be located separately.

7. Priority

Urgency (1-5)	4
Cost Benefit (Low, Medium, High)	Medium
Uncertainty in Existing Data (Low, Medium, High)	High

Importance of New Data (Low, Medium, High) High

8. Fallback Position and Consequences of Non-Execution

The fallback is to proceed to the demonstration unit after testing of the single pilot-scale cell. The consequences of such a path would be to risk major difficulties and delays in the demonstration plant due to unexpected process dynamics, the effect of impurities on the system components and lack of experience with small-scale fabrication of cells and the electrolyzer

9. References

1. J.L. Steimke and T.J. Steeper, "Characterization Testing of H_2O-SO_2 Electrolyzer at Ambient Pressure", Savannah River National Laboratory Report, WSRC-TR-2005-00310, Rev. 0, August 1, 2005.

2. G. H. Farbman, "The Conceptual Design of an Integrated Nuclear Hydrogen Production Plant Using the Sulfur Cycle Water Decomposition System," NASA Contractor Report, NASA-CR-134976, 1976.

3 P.W.T. Lu, "Technological Aspects of Sulfur Dioxide Depolarized Electrolysis for Hydrogen Production," Int. J. Hydrogen Energy, Vol. 8, No. 10, pp. 563-575, 1983.

4. J. W. Weidner, "Electrochemical Generation of Hydrogen via Thermochemical Cycles," AIChE Spring National Meeting, Atlanta, April 12, 2005.

5. W.A. Summers, "Hybrid Sulfur Cycle," SRNL, NHI Semiannual Program Review, Germantown, MD, October 31, 2006.

7.4.8 Product Purification DDNs

The major impurities that can be expected in the products have been identified from the Preconceptual Design material balances. The purity requirements on the hydrogen product are, however, expected to be very stringent and there may well be impurities present in the product streams that cannot be identified by a material balance. The products from the pilot plant will have to be analyzed for impurities and purification methods adjusted to ensure that these are removed as required. It is expected that commercial gas purification methods will be effective in removing any of these impurities, but these will have to be tested to ensure that the required purity levels are reached.

7.4.8.1 Functions

To improve the purity of the product hydrogen and oxygen to meet the requirements of the user.

7.4.8.2 Key Requirements

Requirements will be developed during the studies preceding the Conceptual Design. At that time user requirements will be fixed.

7.4.8.3 Design Data needs

Two Design Data Needs have been identified to supply data needs for the design of the Product Purification System. See Table 7.4-8 below. These address impurities that cannot be identified by initial material balance work and testing commercial purification methods to optimize the design for the NGNP.

Table 7.4-8: Design Data Needs for Product Purification

DDN	Title
HPS-08	**Feed Purification**
HPS-08-01	Identify Product Impurities
HPS-08-02	Test Product Purification Methods

DDN HPS-08-01 IDENTIFY PRODUCT IMPURITIES

1. Assumptions

None

2. Current Database Summary

None

3. Summary of Data Needed

Pilot plant product is to be analyzed for impurities to determine the identity and concentration of impurities that can be expected in the product from the NGNP and from commercial plants.

4. Designer's Alternatives

The designer can depend upon material balance calculations to estimate the identity and concentration of impurities. Design conservatism may compensate for lack of data regarding the concentration of impurities, but it is not reliable if the species of impurity is different than that determined from the material balance.

5. Selected Design Approach and Explanation

The selected design approach is to execute the Preliminary Design of the Product Purification System based upon material balance estimates of the nature and concentration of impurities. The data gathered in the pilot plant will be used as a basis for selecting technology to remove the impurities.

6. Schedule Requirements

Testing must await pilot plant operation.

7. Priority

Urgency (1-5):	5
Cost-Benefit (Low, Medium, High):	High
Uncertainty in Existing Data (Low, Medium, High):	Medium
Importance of New Data (Low, Medium, High):	Medium

8. Fallback Position and Consequences Of Non-Execution

Analysis of the pilot plant products for impurities is a simple and relatively inexpensive task. No fallback is required.

9. References

None

HPS-08-02: TEST PRODUCT PURIFICATION METHODS

1. Assumptions

None

2. Current Database Summary

None

3. Summary of Data Needed

Selected commercial gas purification technologies are to be tested in the pilot plant to determine the most efficient and cost-effective means of removing identified impurities from the product gases.

4. Designer's Alternatives

The designer can easily design a gas purification system from first principles once data on the adsorbent is available. It is expected that adsorbents will be used and the adsorbent vendor will carry out some form of testing.

5. Selected Design Approach and Explanation

The selected design approach is to select adsorbents based on experience, test the adsorbents either in the pilot plant or on a bench-scale system using product gases from the pilot plant. The final system design will be based upon the data gathered in this way.

6. Schedule Requirements

Testing must await pilot plant operation.

7. Priority

Urgency (1-5):	5
Cost-Benefit (Low, Medium, High):	High
Uncertainty in Existing Data (Low, Medium, High):	Medium
Importance of New Data (Low, Medium, High):	Medium

8. Fallback Position and Consequences Of Non-Execution

If testing is not carried out vendors will probably not offer performance guarantees on the adsorbents. Without testing there remains a higher risk that the product gases will not meet the product specification. If that happens, the demonstration plant would have to be retrofitted to make the product fit for purpose.

9. References

None

7.4.9 Instrument and Controls DDNs

Sensors and valves are not now available for the high temperature corrosive environment in the sulfuric acid/ sulfur dioxide loop. A control strategy will have to be developed during Conceptual Design that attempts to eliminate control elements in the most demanding parts of the loop. It will be necessary, however, to measure some process parameters under very demanding conditions. Even the less demanding parts of the acid loop pose challenges. If appropriate materials can be found in the DDN HPS-02 effort, some of these issues may be resolved. In other cases, novel sensing and control methods may have to be investigated.

7.4.9.1 Functions

The functions pertinent to these DDNs are as follows:

Collect all pertinent operating data from the processes in the HPS to allow proper control of operations and economic optimization of operations.

Control every sub-system of the HPS so that each one carries out its functions according to its individual requirements in all modes of operation.

7.4.9.2 Key Requirements

Requirements will be developed during Conceptual Design and after the Supplementary Materials DDNs (HPS-02) have been completed. The requirements of these DDNs can be determined only after those efforts are complete.

7.4.9.3 Design Data needs

The following three Design Data Needs are placeholders for DDNs that will be developed during Conceptual Design and after DDNs HPS-02 are completed. The number and content of these may change significantly during those efforts. See Table 7.4-9 below. These address identifying impurities that cannot be identified by initial material balance work and testing commercial purification methods to optimize the design for the NGNP.

Table 7.4-9: Design Data Needs for Instrument and Controls

DDN	Title
HPS-09	**Feed Purification**
HPS-09-01	Test Sensors in the Pilot Plant
HPS-09-02	Develop Valves for High-Temperature Acid Service
HPS-09-03	Test Valves in the Pilot Plant

DDN HPS-09-01 TEST SENSORS IN THE PILOT PLANT
DDN HPS-09-02 DEVELOP VALVES FOR HIGH-TEMPERATURE ACID SERVICE
DDN HPS-09-03 TEST VALVES IN THE PILOT PLANT

1. Assumptions

The assumptions in developing these placeholder DDNs are as follows:

a) Sensor development will depend solely on finding the appropriate materials of construction. If DDN HPS-02 is successful, the only remaining task is to test the sensors in the pilot plant.

b) The control strategy developed during Conceptual Design will require that high temperature valves in acid service be developed.

2. Current Database Summary

None

3. Summary of Data Needed

Sensors and valves are required that will operate successfully in the environments required by the control strategy to be developed during Conceptual Design.

4. Designer's Alternatives

Some combination of control strategy, sensor and control device design and materials of construction must be found to control the acid loop. The alternatives have not yet been developed.

5. Selected Design Approach and Explanation

The design approach is to be developed during Conceptual Design.

6. Schedule Requirements

A control strategy to determine DDN requirements is to be developed during Conceptual Design. Development of elements should await completion of DDNs HPS-02. Testing must await pilot plant operation.

7. Priority

Urgency (1-5):	3
Cost-Benefit (Low, Medium, High):	High
Uncertainty in Existing Data (Low, Medium, High):	High
Importance of New Data (Low, Medium, High):	High

8. Fallback Position and Consequences Of Non-Execution

There is no fallback. The process must be controlled in some manner.

9. References

None

7.5 HYDROGEN PRODUCTION SYSTEM COMPLEXITY, RISKS AND FUTURE STUDIES

7.5.1 Hydrogen Production System Complexity and Risks

7.5.1.1 Complexity

Upon first inspection, the HyS process flow diagram appears reasonably simple. There are only two major reactions (sulfuric acid decomposition to sulfur trioxide, water, and oxygen; and sulfur dioxide and water electrolysis to hydrogen and sulfuric acid) and two major separations (concentration of sulfuric acid and absorption of sulfur dioxide from oxygen). These steps, however, are arranged in a closed loop. This means that any upset or deviation from steady state will be propagated throughout the system in a feedback loop. The presence of a large sulfuric acid storage volume between the two parts of the plant mitigates the dangers of serious upsets considerably. Potential control issues of this kind can be identified during Conceptual Design, but solutions may have to await the preliminary design phase.

The major components contributing complexity to the system are the Decomposer and the Electrolyzer. Of the two, the Decomposer presents by far the most challenging design issues. Scaling up the decomposer from a single bench scale silicon carbide tube or microchannel block will not be a simple matter of replication. One important problem will be ensuring a reasonable degree of uniformity throughout the reaction zone. The tubular, bayonet or micro channel designs all suffer from the possibility of uneven distribution of liquid sulfuric acid flow among a large number of tubes operating in parallel. In the tubular or bayonet designs, distributing the heating medium among the outside of the tubes and thus creating an even temperature distribution across all the tubes will also be difficult. Designs that incorporate microchannel ceramic heat exchangers offer better temperature distribution, but incorporating and replacing catalyst in these designs seems extremely difficult. No other Decomposer configuration has been proposed.

The efficiency of the Decomposer also depends upon the effectiveness of the Concentrator. Inefficiency in the concentration of the feed would result in a drop in temperature as proportionately more water was fed to the Decomposer. Lower feed concentrations would also result in higher conversions, but the net effect has not been determined. Control of the Concentrator and Decomposer will be challenging because of the high operating temperature and pressure and the aggressive environment. Either a design must be developed that is self-regulating, or valves and sensing elements that can operate under these conditions must be found.

A drop in the efficiency of the Absorbers would have the effect of losing large amounts of sulfur dioxide to the caustic scrubber. If the sulfuric acid or sulfur dioxide make-up rate was not increased proportionately, soon nothing but water and steam would be circulating through the system. The sensitivity of these upsets to changes in operating parameters must be investigated.

7.5.1.2 Risks

Perhaps the first risk for a HyS plant making hydrogen for fuel cell use is in not meeting the required purity specification. This is not a risk for many other uses of hydrogen, nor is it a risk for HTSE technology. In this study, we have assumed that the product hydrogen must be pure enough to be used in automotive fuel cells. The current automotive fuel cell hydrogen specification (SAE J 2719) calls for a sulfur content of not more than 4 ppbv. It is not certain whether this level of sulfur content can be measured in a continuous process stream under industrial conditions. Neither is it known whether hydrogen can be purified to that degree using commercial technology. The reason for this concern is that the membranes currently under investigation for use in the Electrolyzers have a tendency to leak small amounts of sulfur resulting in an estimated product sulfur content of about 100 ppmv. If a sulfur-tight membrane can be found, the need for hydrogen product purification is eliminated. If it cannot, then purification technology may have to be developed. Another possibility is that the SAE J 2719 specification is based not upon the real requirements of hydrogen fuel cells, but on the purity levels that are commonly reached by alkaline water electrolysis. Before serious efforts are mounted to develop new technology, the real requirements of the product should be determined.

Another risk in this technology is presented by the possibility of not being able to control the concentration and decomposition steps effectively. The concentration and decomposition steps may be dynamically stable and may not require extensive control. A design may be developed that is self-regulating. If such a design cannot be developed, then the maximum achievable operating conditions may depend on the operating limits of valves, valve materials and sensors available at the time that the Preliminary Design is finalized.

The ability to design and build this plant to operate at the proposed conditions depends to a large degree on the ability to develop adequate materials of construction. Although silicon carbide is the material of choice to operate under the required conditions, the entire system cannot be constructed of silicon carbide. There must be some point, probably in the Decomposer or the Concentrator at which the silicon carbide must be attached to a metal resistant to sulfuric acid, oxygen and sulfur dioxide at some elevated temperature. Neither the metal nor the attachment method has yet been developed. There is reason to believe that if currently existing materials are not sufficiently resistant or strong under the required conditions, then it will not be possible to meet the NGNP schedule. It may be possible, on the other hand, to design a Decomposer/Concentrator in which the joint between ceramic and metal takes place at service conditions under which existing materials are applicable. Arriving at an adequate joining or sealing method is also not certain, although some work in this area is currently being done by Shaw, the World Centre for Materials Joining Technology, Westinghouse, Ceramatec, and others.

Extended tests with decomposition catalyst have not been reported. It is not clear from the existing data whether decomposition catalysts will deteriorate over time. A catalyst life of at least 20,000 hours is needed to commercialize this technology. This must be developed and its characteristics well known before the beginning of the Preliminary Design phase.

Containing, moving, processing, measuring, and controlling the sulfuric acid and the products of decomposition under the operating conditions requires auxiliary materials of construction in addition to the primary materials used for the fabrication of the process equipment. These services include gaskets, pump seals, valve seals, piping, welding materials, coating, and cladding. The need for some of these may be avoided by design strategies, but some combination of materials and design must be found to carry out all the operations required in the sulfuric acid/sulfur dioxide loop.

In this process, all the feed materials are introduced as liquids and all the products leave as gases. That means that any dissolved materials in the feeds or products of corrosion will collect in the system. Sulfuric acid and other highly corrosive chemicals are circulated through metallic piping and equipment. There will be some level of corrosion products in the circulating liquid. These impurities may render the Electrolyzer membranes, electrodes, or Decomposer catalyst ineffective. They may also deposit on surfaces where total vaporization takes place such as in the Decomposer. The sensitivity of these components of the system to such impurities and the purity requirements of the circulating liquid must be determined. Means of feed and sulfuric acid purification and impurity management must be developed.

Although confirmation of the basic data would be reassuring during the Conceptual Design phase, it is not considered to be a serious source of risk. Extrapolations that have been made appear reasonable and consistent with all the existing data. Certainty in this area is needed before proceeding with the Preliminary Design.

This section details the main technology risks that face the HyS process at this stage in its development. Any of them may pose a risk to meeting the schedule or cost targets for this project.

The DDNs identified in Section 7.4 address most of these concerns. In addition, there are design activities or trade studies described below that should be carried out in conjunction with R&D activities. These activities and trade studies are considered in the NGNP schedule. Optimistic assumptions have been made in the development of the DDNs and the R&D plan for this technology. There is a risk that development progress will make meeting the NGNP schedule a challenge. In light of the fact that risks faced by HTSE are different than the risks associated with HyS, a similar analysis of the risks of that technology ought to be carried out before a final technology selection for NGNP is made.

7.5.2 Hydrogen Production System Future Studies

7.5.2.1 Trade Studies

The first study, as suggested in the preceding section, should be to re-examine the two leading water-splitting candidate technologies for inclusion in the NGNP project. In light of the possible sulfur purity requirement, the development cost and schedule risks associated with HyS, and other findings of this Preconceptual Design Report, it is appropriate to further develop a comparison between HyS and HTSE. A risk assessment similar to that done above for the HyS process should be conducted for the HTSE technology. Both technologies, especially the flow sheets and equipment lists, should be re-examined for cost reduction opportunities. A thorough search for appropriate materials of construction for both technologies should be made. Apart from the costs of electrolyzers for HyS and the solid oxide electrolysis cells for HTSE, materials of construction are the biggest capital cost driver.

The market for the product from the NGNP HPS should be determined. This study will build upon the work done in Special Study 20.7: *NGNP By-Products and Effluents Study*. It will also set the product specification for both the hydrogen and oxygen products from the HPS. The basis for the SAE J 2719 hydrogen specification should be investigated to determine whether the sulfur specification is truly required for fuel cell use.

Trade studies of alternative flowsheets are appropriate. For HyS, the reference flowsheet should be compared to the flowsheet now being jointly developed by Savannah River National Laboratory (SRNL) and Westinghouse, and other alternatives.

Studies of the sensitivity of the operation of the entire HPS to deviations in operating conditions, and especially conversion efficiencies in the Electrolyzers and in the Decomposer for HyS or in the SOECs for HTSE are required before the Conceptual Design can be launched on a firm footing. The effect of operating conditions in the HyS Decomposer, including the operating temperature, pressure and concentration on the capital and operating cost of the HyS process should be compared with similar sensitivities to conditions in the SOECs on HTSE costs.

Alternative HyS Decomposer and Concentrator designs should be developed and compared for cost and technical risk. A temperature-enthalpy analysis of the HyS Decomposer should be carried out. Decomposer considerations must include heat transfer surface and rate, temperature distribution in the reaction zone, reactant residence time, space for catalyst, catalyst replaceablity, flow distribution among parallel paths, access for maintenance and replacement of elements. The Concentrator must reach the required Decomposer inlet concentration and not require pumping sulfuric acid at elevated temperatures.

An exhaustive survey of existing materials of construction, both primary and auxiliary, for use in either the Electrolysis and Sulfuric Acid Decomposition Systems or the HTSE plant should be initiated.

7.5.2.2 Conceptual Design Scope

7.5.2.2.1 Flowsheet development

Incorporate the results of the trade studies and available R&D results

Carry out secondary trade studies such as:

Determine whether to avoid acid letdown to atmospheric pressure

Determine number of absorption stages and the number of electrolyzers per stage

Optimization of cooling for electrolyzers

Carry out a stability and operability study of the Decomposer, Concentrator and Recuperator

Develop an impurities management system that meets the requirements determined during the trade studies

Develop a Product Purification system design that meets the real requirements determined during the trade studies.

7.5.2.2.2 Heat and Material Balance

Perform heat integration with realistic temperature approaches and cooling temperatures.

Decide whether SO_2 or H_2SO4 makeup is more economically and technically feasible.

Decide whether recovery of SO_2 is economical.

Based on preliminary estimates, develop a strategy for impurities management in the acid loop.

7.5.2.2.3 Equipment design

Decomposer conceptual mechanical design

Sulfuric Acid Concentrator conceptual mechanical design

Possible integration of the decomposer and sulfuric acid concentrator services into a compatible integrated configuration

Electrolyzer conceptual configuration

Electrolyzer conceptual mechanical design

Absorber process design

Product scrubber and adsorbent bed process design

Complete the materials of construction survey

7.5.2.2.4 Manufacturing Development

Begin vendor contacts and involvement in the development of

Ceramic elements

Decomposition catalyst

Integrated Decomposer
Membranes, electrolysis catalysts and electrodes
Integrated Electrolyzer
Materials of construction

7.5.2.2.5 Operations

Develop a startup and shutdown sequence in conjunction with the Power Conversion System and Nuclear Heat Supply System

REFERENCES

[7-1] Daniel M. Ginosar, Anne W. Glenn, and Lucia M. Petkovic, "Stability of Sulfuric Acid Decomposition Catalysts for Thermochemical Water Splitting Cycles", AIChE National Meeting, New Orleans, 2004.

[7-2] L. C. Brown, R. D. Lentsch, G. E. Besenbruch, K. R. Schultz, and J. E. Funk, "Alternative Flowsheets for The Sulfur-Iodine Thermochemical Hydrogen Cycle", AIChE 2003 Spring National Meeting, p. 2-5.

[7-3] Department of Energy, "Nuclear R&D Plan", Appendix 3-1, p. 15.

[7-4] General Atomics, H2-MHR Conceptual Design Report: SI-Based Plant, April 2006, GA-A25401.

[7-5] "MHI Preliminary Review results for initial PHP Blower Requirements", internal communication with PBMR, May 16, 2006.

[7-6] E. J. Lahoda et al., "Estimated Costs for the Improved HyS Flowsheet", HTR2006, Paper number C00000068, Johannesburg, Republic of South Africa, October, 2006.

[7-7] G. H. Farbman and V. Koump, "Hydrogen Generation Process – Final Report", FE-2262-15, June 1977.

[7-8] W. C. Yang and W. Feduska, "Hydrogen Generation by High Temperature Water Vapor Electrolysis Using Solid Electrolyte Cells", for contract # 585847-S, Brookhaven National Laboratory, Setember 6, 1988.

[7-9] S. Veyo, "Solid Oxide Fuel Cell Overview", Siemens Presentation on AES-SOFC performance, July, 2003.

[7-10] H2-MHR Pre-Conceptual Design Report: HTSE-Based Plant, April 2006, GA-A25402.

[7-11] Herring, J.S., J. E.O'Brien and C. M. Stoots, Conceptual Design of a High Temperature Electrolysis Plant, Appendix to Nuclear Hydrogen R&D Plan, US DOE, Office of Nuclear Energy, Science and Technology, March 2004.

[7-12] High Temperature Gas-Cooled Reactors for the Production of Hydrogen: Establishment of the Quantified Technical Requirements for Hydrogen Production that will Support the Water-Splitting Processes at Very High Temperatures, EPRI, Palo Alto, 2004. 1009687.

[7-13] *Nuclear Hydrogen R&D Plan*, U.S. Department of energy, Office of Nuclear energy, Science and Technology, March 2004.

[7-14] Oh, C. H., et al., HyPEP FY06 Report: Models and Methods, INL, September 2006, INL/EXT-06-11725.

[7-15] Jensen, S. H., and M. Mogensen, Perspectives of High Temperature Electrolysis Using SOEC, 19th World Energy Congress, Sydney, September 2004.

[7-16] Presentations by Herring, Hartvigsen and Stoots at the DOE NHI Semiannual Review, Germantown, October 31 - November 01, 2006.

[7-17] 2005 Fuel Cell Program Annual Report, US DOE Office of Fossil Energy, September 2005.

[7-18] The Value and Manufacturing Costs of Planar Solid Oxide Fuel Cell Stacks, GRI-96/0210, Gas Research Institute, Chicago, July 1996.

[7-19] Summers, W.A., "Nuclear Hydrogen Production Based on the Hybrid Sulfur Thermochemical Process," HTR2006, Paper number 100000202, Johannesburg, Republic of South Africa, October, 2006.

[7-20] NGNP and Hydrogen Production Preconceptual Design Report, NGNP-01-RPT-001, *Special Study 20.7 – NGNP By-Products and Effluents Study*, January 2007.

[7-21] Steimke, J.L. and Steeper, T.J. "Characterization Testing of H_2O- SO_2 Electrolyzer at Ambient Pressure," WSRC-TR-2005-310, Rev.0, Savannah River National Laboratory, August 2005

LIST OF ASSUMPTIONS

7.1 Oxygen is assumed to be vented to atmosphere
7.2 Hydrogen must meet the SAE J 2719 specification
7.3 A hydrogen pipeline assumed to be available close to the plant
7.4 The water quality needed will be consistent with the semiconductor and super critical power industry water quality requirements.
7.5 Acid loop impurities can be controlled by feedwater purification and a modest acid blowdown. Neither make-up acid nor loop acid purification is required.
7.6 Electrolyzer cells are of a bipolar design with each stack requiring about 8800 amps with a voltage drop of about 12 V or 238 kW per stack.

APPENDICES

APPENDIX 7A ECONOMIC COMPARISON OF WATER-SPLITTING PROCESSES

The following PDF file is provided on CD:

Appendix_7A_Technology Selection Comparisons.pdf

APPENDIX 7B SOCIETY OF AUTOMOTIVE ENGINEERS' SPECIFICATION FOR HYDROGEN FOR FUEL CELLS

The following PDF file is provided on CD:

Appendix_7B_hydrogen spec SAE.pdf

APPENDIX 7C WESTINGHOUSE HYS SIMULATION RESULTS

The following PDF files are provided on CD:

Appendix_7C Reference Flowsheet 500-199 MWt (¼ PCU) non-proprietary 15Mar07.pdf

Appendix_7C_Reference PHP1a 500-199 MWt.pdf

APPENDIX 7D FEED AND UTILITY SUPPLY SYSTEM DOCUMENTS

The following PDF file is provided on CD:

Appendix_7D_NGNP HPS FUS Equipment List 21may07.pdf

APPENDIX 7E SULFURIC ACID DECOMPOSITION SYSTEM DOCUMENTS

The following PDF files are provided on CD:

Appendix_7E_NGNP SAD Equipment List 21may07.pdf

Appendix_7E_NGNP SAD MatBal 23apr07.pdf

Appendix_7E_NGNP SAD PFD 21may07.pdf

APPENDIX 7F ELECTROLYSIS SYSTEM DOCUMENTS

The following PDF files are provided on CD:

Appendix_7F_NGNP ELE Equipment List 21may07.pdf

Appendix_7F_NGNP ELE MatBal 23apr07.pdf

Appendix_7F_NGNP ELE PFD 21may07.pdf

APPENDIX 7G PRODUCT PURIFICATION SYSTEM DOCUMENTS

The following PDF files are provided on CD:

Appendix_7G_NGNP PPU Equipment List 21may07.pdf

Appendix_7G_NGNP PPU MatBal 21may07.pdf

Appendix_7G_NGNP PPU PFD 21may07.pdf

APPENDIX 7H PRODUCT STORAGE AND DELIVERY SYSTEM DOCUMENTS

The following PDF file is provided on CD:

Appendix_7H_NGNP HPS PSD Equipment List 21may07.pdf

APPENDIX 7I WASTE TREATMENT AND DISPOSAL SYSTEM DOCUMENTS

The following PDF file is provided on CD:

Appendix_7I_NGNP WTD Equipment List 21may07 .pdf

APPENDIX 7J FINAL DESIGN REVIEW PRESENTATION TO BEA

Section 7
Hydrogen Production System

Charles Bolthrunis

Preconceptual Design Report
90% Design Review

May 8-10, 2007

P B M R

Westinghouse NGNP Team

P B M R

Introduction

- Technology Selection
- System Description
  - System-level interactions
  - Subsystem descriptions
    - Feed and Utility Supply
    - Sulfuric Acid Decomposition
    - Electrolysis
    - Product Purification
    - Product Storage and Delivery
    - Waste Treatment and Disposal
    - Control and Instrumentation
- R&D Needs
- Complexity / Risks
- Conclusions / Future Studies

P B M R

High Temperature Steam Electrolysis

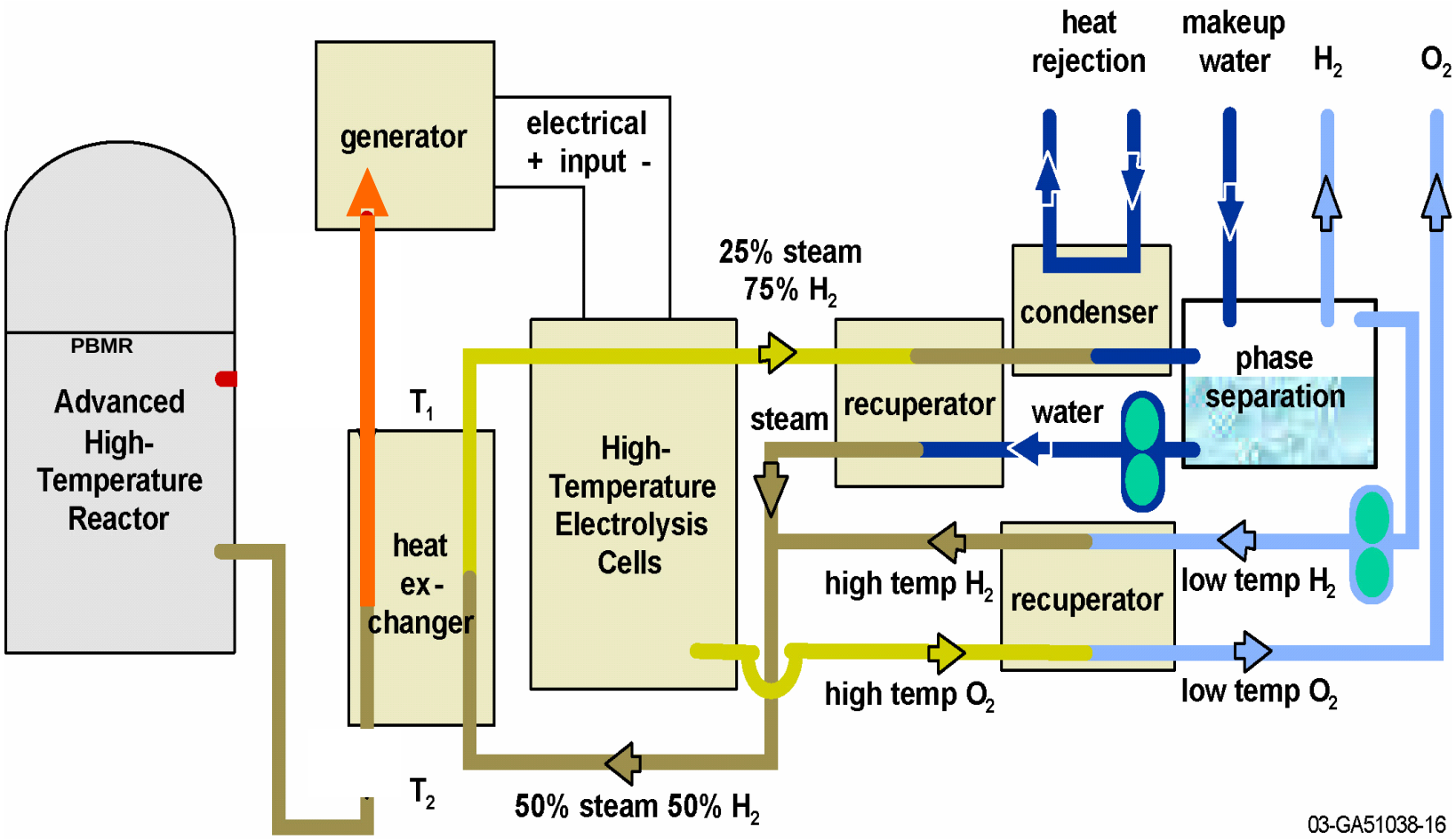

P B M R

Sulfur Iodine

Sulfur-Iodine Cycle

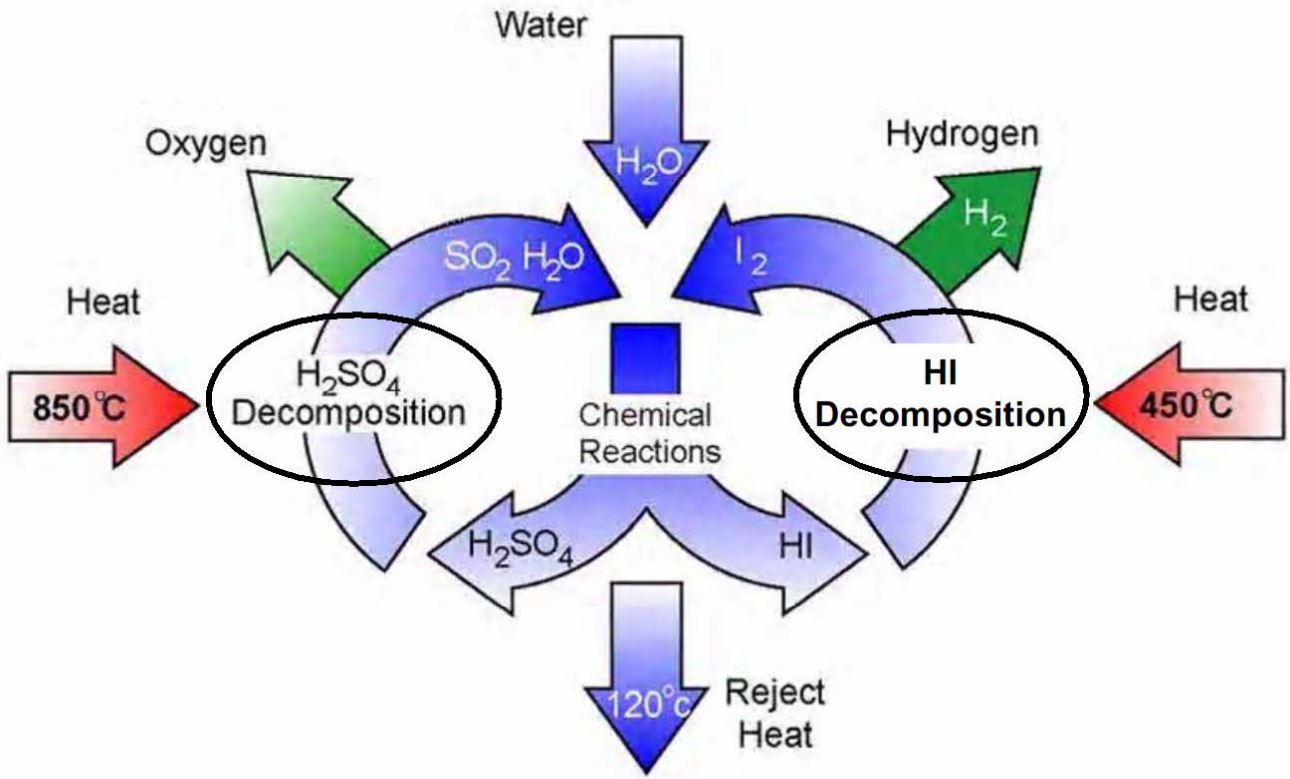

The Hybrid Sulfur Process

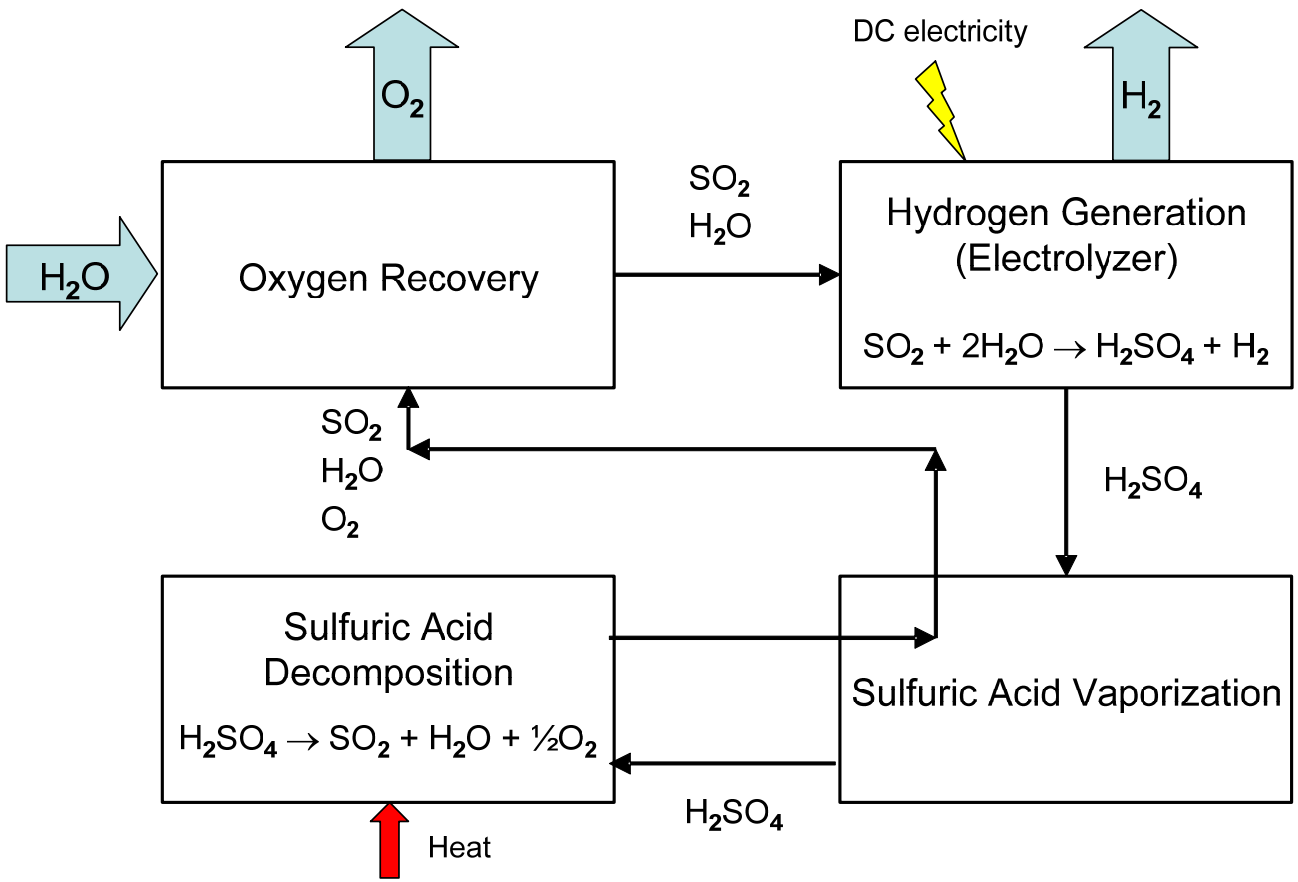

P B M R

Hybrid Sulfur Selected

- Closest technology to commercialization
  - Lower technical risk than Sulfur Iodine
  - Potentially lower product cost than High Temperature Steam Electrolysis
- Significant user of process heat
- Best fit for NGNP goals

P B M R

Technology Selection

- 14 criteria developed
- HyS used as the benchmark
- Other technologies scored higher or lower based on relative merit
- Criteria divided into Risk and Cost categories
- Risk and Cost weighted
- Scores normalized to a benchmark score of 10

	SI	HyS (bench-mark)	HTSE
Risk (60%)	3.5	6.0	6.7
Cost (40%)	4.2	4.0	2.9
Total	7.7	10	9.6

P B M R

Discriminating Risk Factors

- **Process definition**
  - **SI not fully defined, simulation uncertain**
- **Process complexity**
  - **HTSE simplest, but steam distribution an issue; SI most complex**
- **Process stability**
  - **Closed loops will contribute to instability; mitigated by intermediate storage**
  - **Control of Sulfuric Acid Decomposition will be difficult**
- **Energy integration**
  - **HyS simplest; HTSE next, but ambitious**
- **Materials of construction**
- **Thermodynamic data**
  - **HTSE data complete; HyS data needs confirmation; SI data incomplete**

P B M R

Discriminating Cost Factors

- **Capital Cost**
  - **HTSE and HyS dominated by large quantities of commodities**
    - **high and uncertain cost**
      - **HyS: Electrolysis cells and SiC Decomposer surface**
      - **HTSE: Solid Oxide Electrolysis Cells (SOECs)**
      - **SI: SiC Decomposer surface**
- **Operating Cost**
  - **Power conversion and use of electricity**

P B M R

Hydrogen Production System Functions and Requirements

- Produce Hydrogen
  - 50 MWt
  - 13 MWe
  - 7 million SCFD
  - Product purity for fuel cell use
- Use HyS process and PBMR
  - Commercial scale: 350 MWt out of 500 MWt used for splitting water
    - as both heat and electricity
    - 150 MWt used for generating export electricity
- Safe design and operation
  - NFPA and OSHA standards
  - Process Hazards Analyses
- Environmental responsibility
- Economical design
  - Chemical industry standards and practices

Hydrogen Production System Interactions

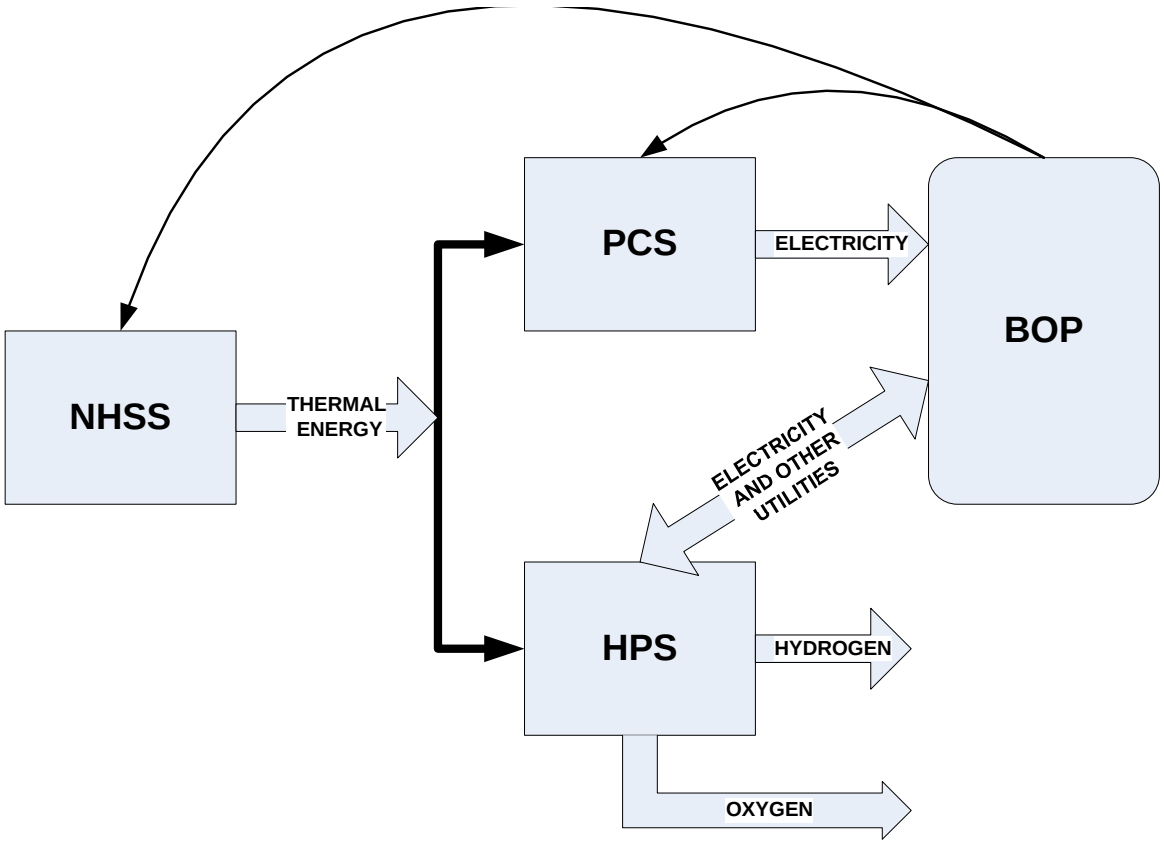

- Nuclear Heat Supply System (NHSS)
- Power Conversion System (PCS)
- Hydrogen Production System (HPS)
- Balance of Plant Systems (BOP)

P B M R

HPS System Interfaces

- NHSS by way of Secondary Heat Transport System (SHTS)
  - The Decomposer is the Process Coupling Heat Exchanger (PCHX)
  - HPS without redundancy not a reliable sink for nuclear heat
    - PCS is the heat sink
- Supply Interfaces with BOP are mostly through the Feed and Utility Supply System (FUS)
  - Electricity
  - Feed water
  - Cooling Water
  - Catalyst and Chemicals deliveries
- Hydrogen delivery direct to pipeline
- Oxygen is vented
- SOx Cooler is an Air Cooler for the NGNP, in a commercial plant it would provide BFW preheat
- Wastewater and other disposal by BOP

HPS Subsystems Interactions

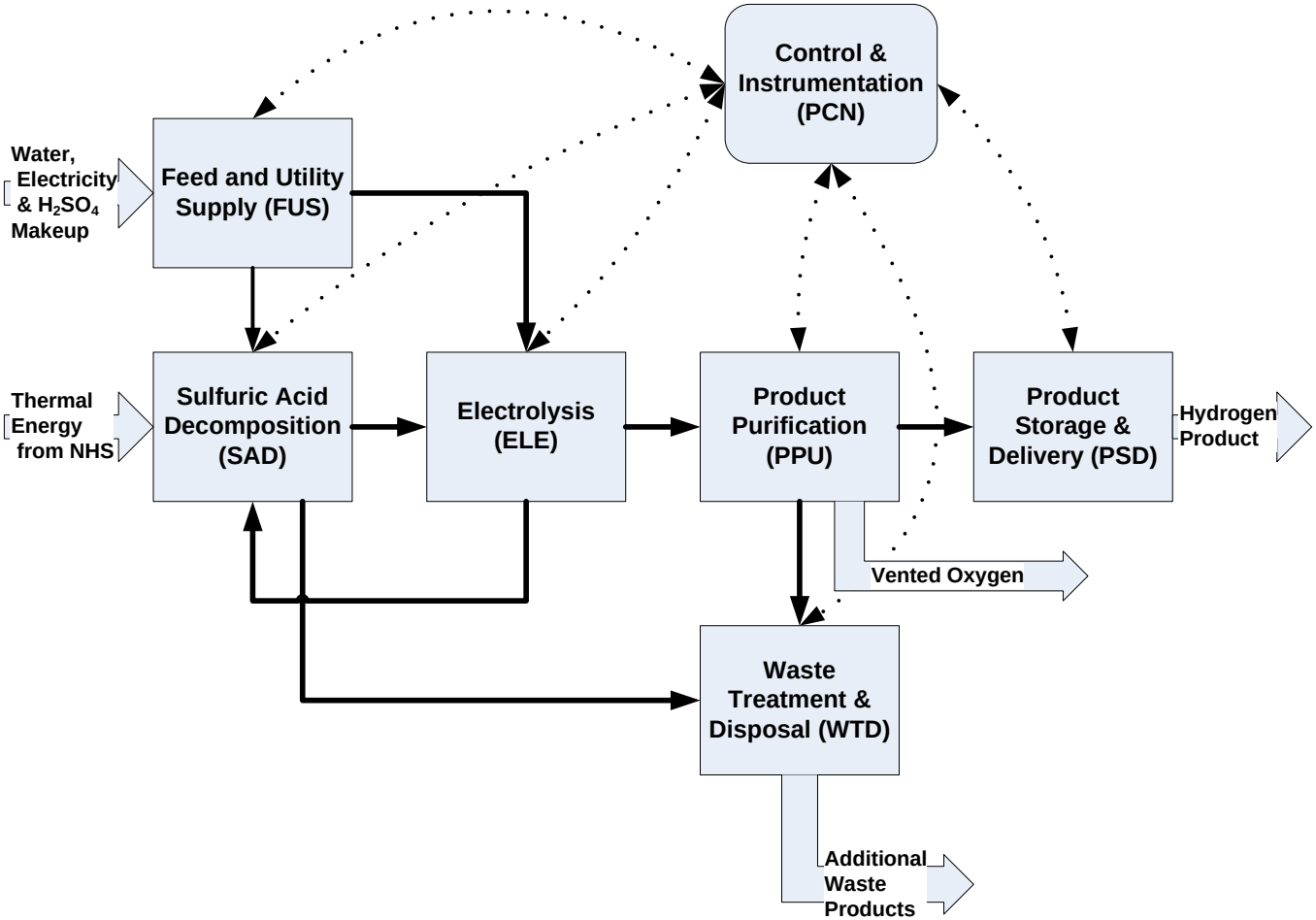

P B M R

Subsystem Functions and Requirements

- **Feed and Utility Supply System (FUS)**
  - Utility and chemicals distribution within HPS
  - Feedwater purification
- **Sulfuric Acid Decomposition System (SAD)**
  - Transfer heat from the NHSS (50 MWt @ 900°C, 9 MPa)
  - Decompose sulfuric acid (85+% H_2SO_4, ~50% per pass conversion)
  - Heat recovery
- **Electrolysis System (ELE)**
  - Recover sulfur dioxide from product oxygen
  - Electrolyze water and sulfur dioxide to produce sulfuric acid and hydrogen (13 MWe)
  - Hydrogen production (~0.2 kg/s, 4 MPa)
  - Oxygen production (~1.6 kg/s, 3.9 MPa)
  - Deliver sulfuric acid to the SAD and hydrogen to the PPU

P B M R

Subsystems Functions and Requirements (continued)

- **Product Purification System (PPU)**
  - Oxygen purity (pipeline quality, vented)
  - Hydrogen purity (4 ppbv sulfur, 5ppmv water)
- **Product Supply and Delivery System (PSD)**
  - Pipeline pressure
- **Waste Treatment and Disposal System (WTD)**
  - Waste neutralization
  - Wastewater disposal
  - Solid waste disposal
- **Control and Instrumentation System (PCN)**
  - Control all processes in HPS
  - Control interface with Central Control and Supervisory System

Sulfuric Acid Decomposition Flow Sheet

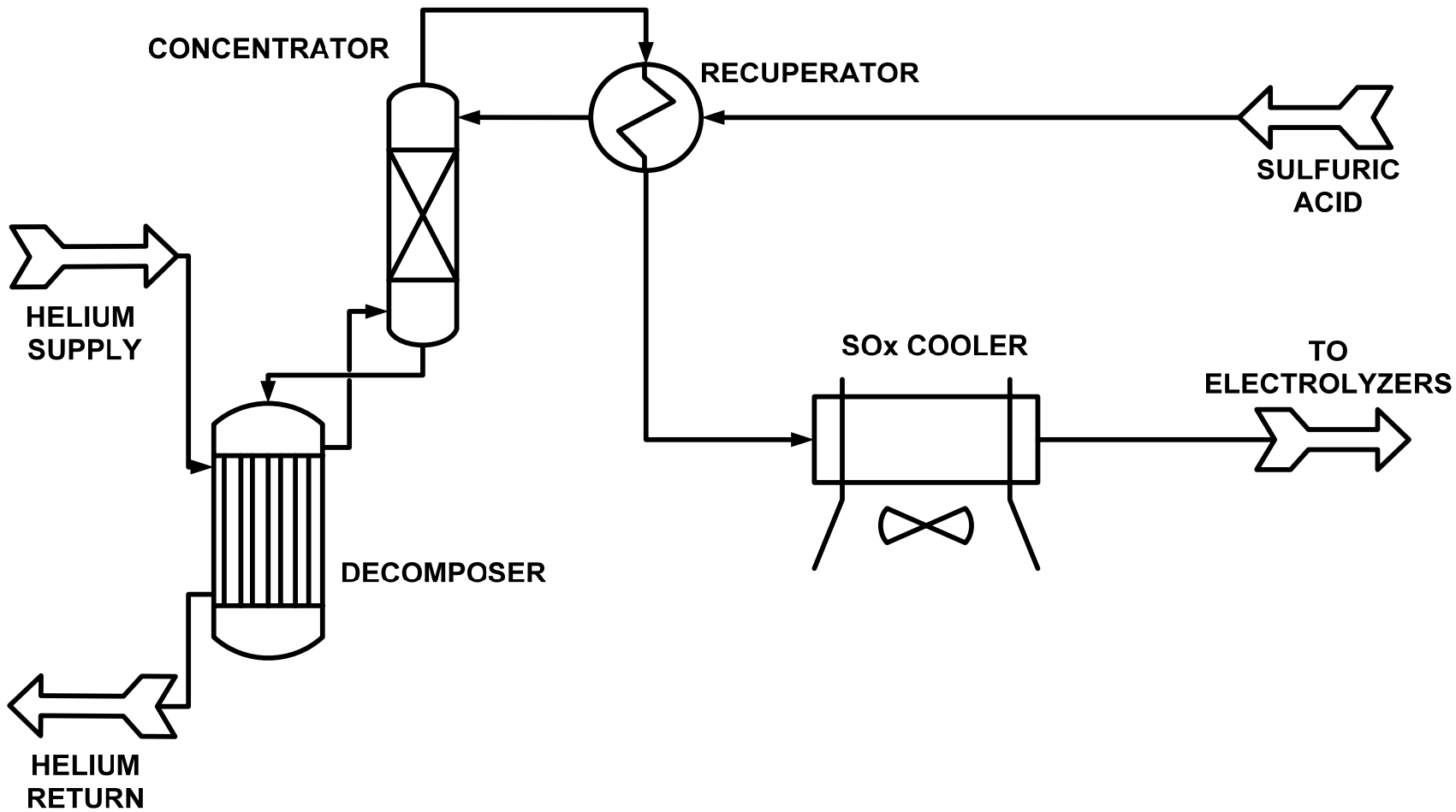

P B M R

Decomposer (PCHX)

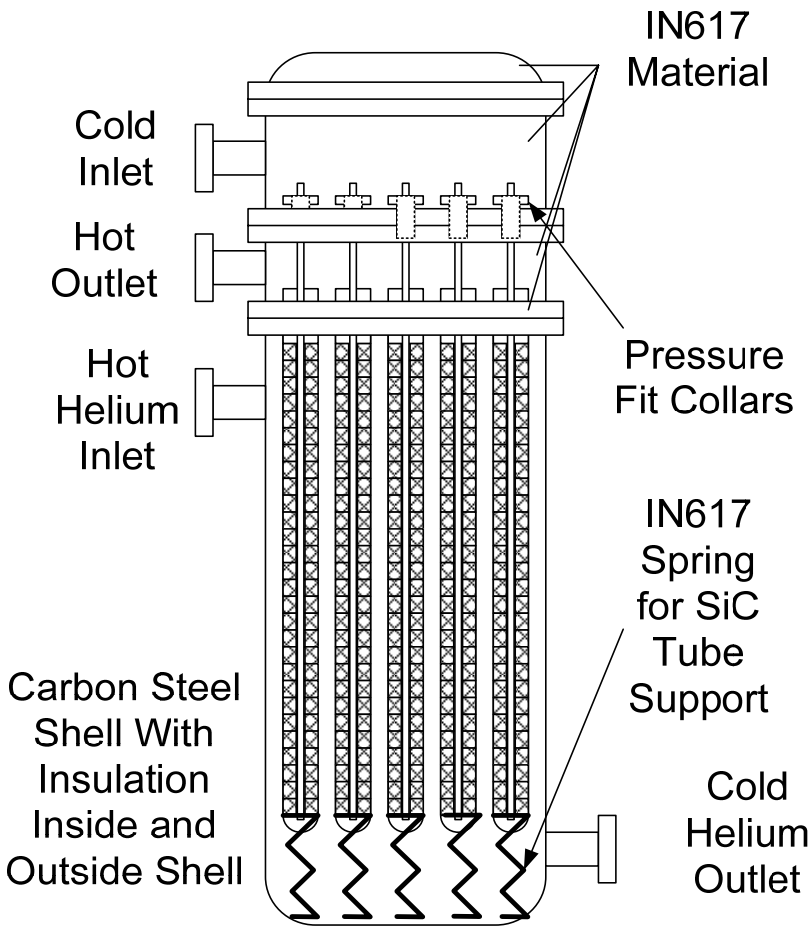

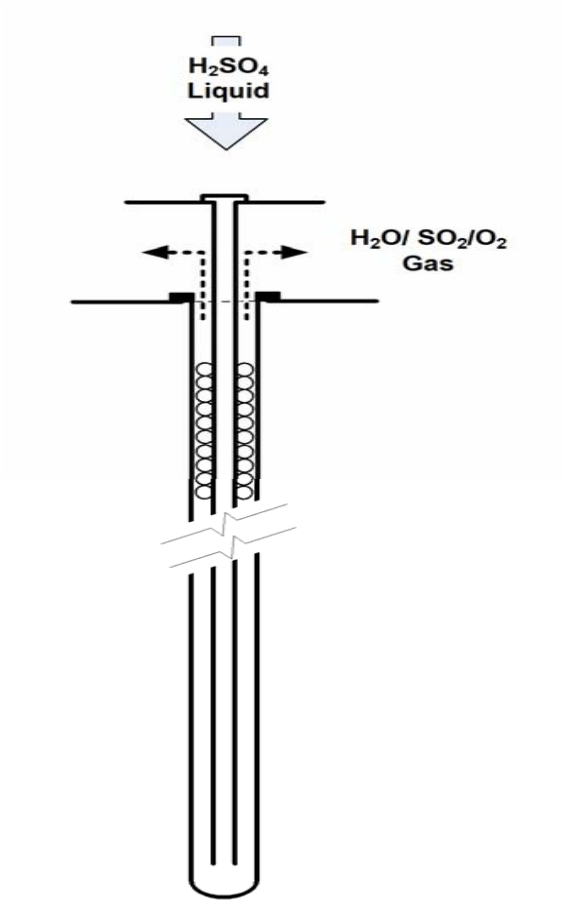

Hybrid Sulfur Electrolysis

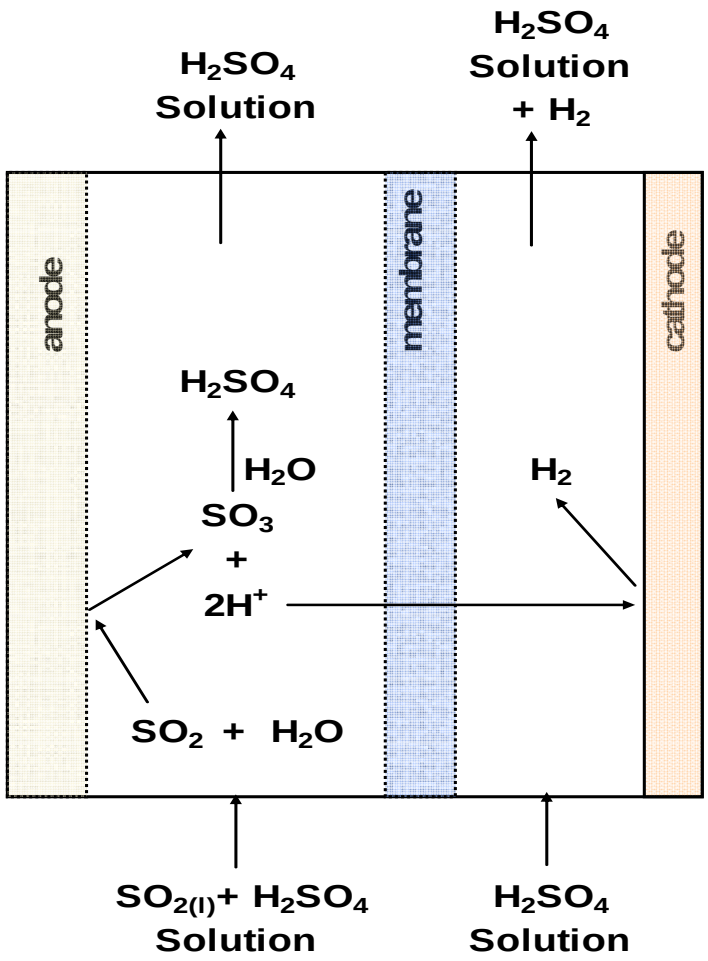

P B M R

Hybrid Sulfur Electrolyzer Test Cell

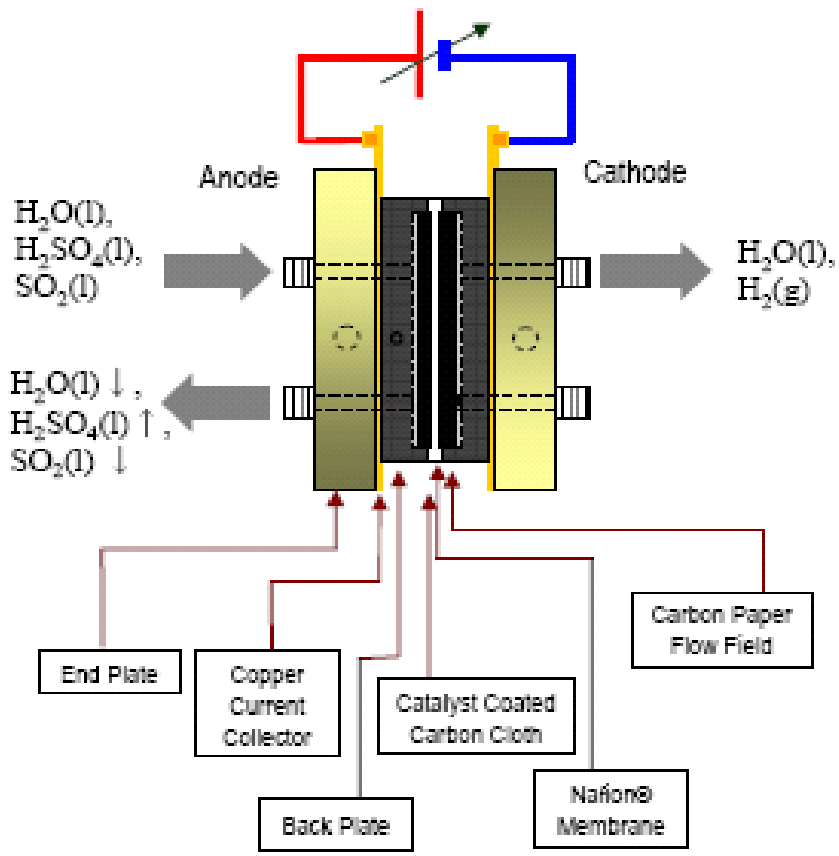

Adapted from JW Weidner, *Intl. J. Hydrogen Energy*, 2005.

Electrolyzer Flow Sheet

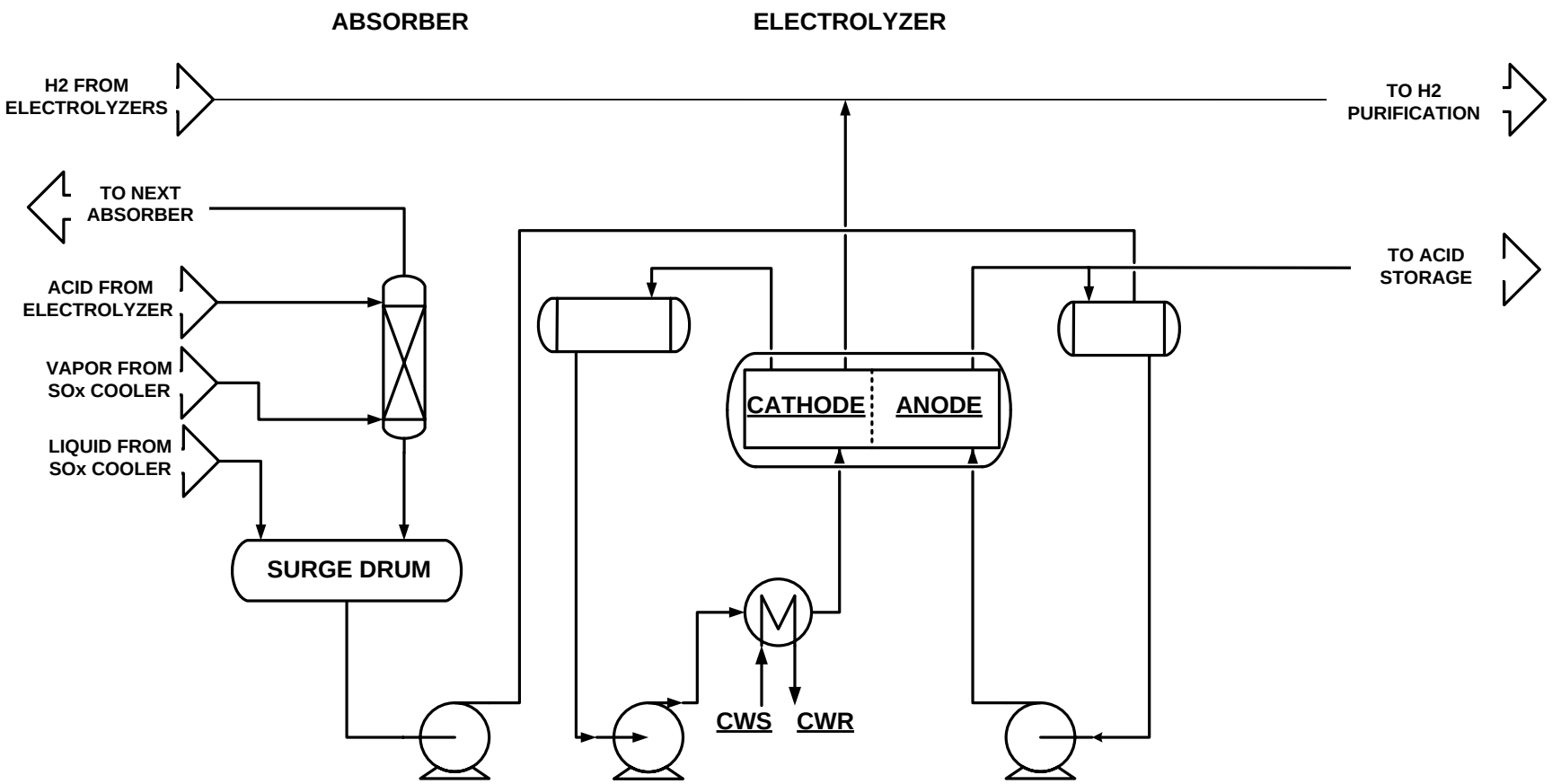

Electrolyzer System Staging

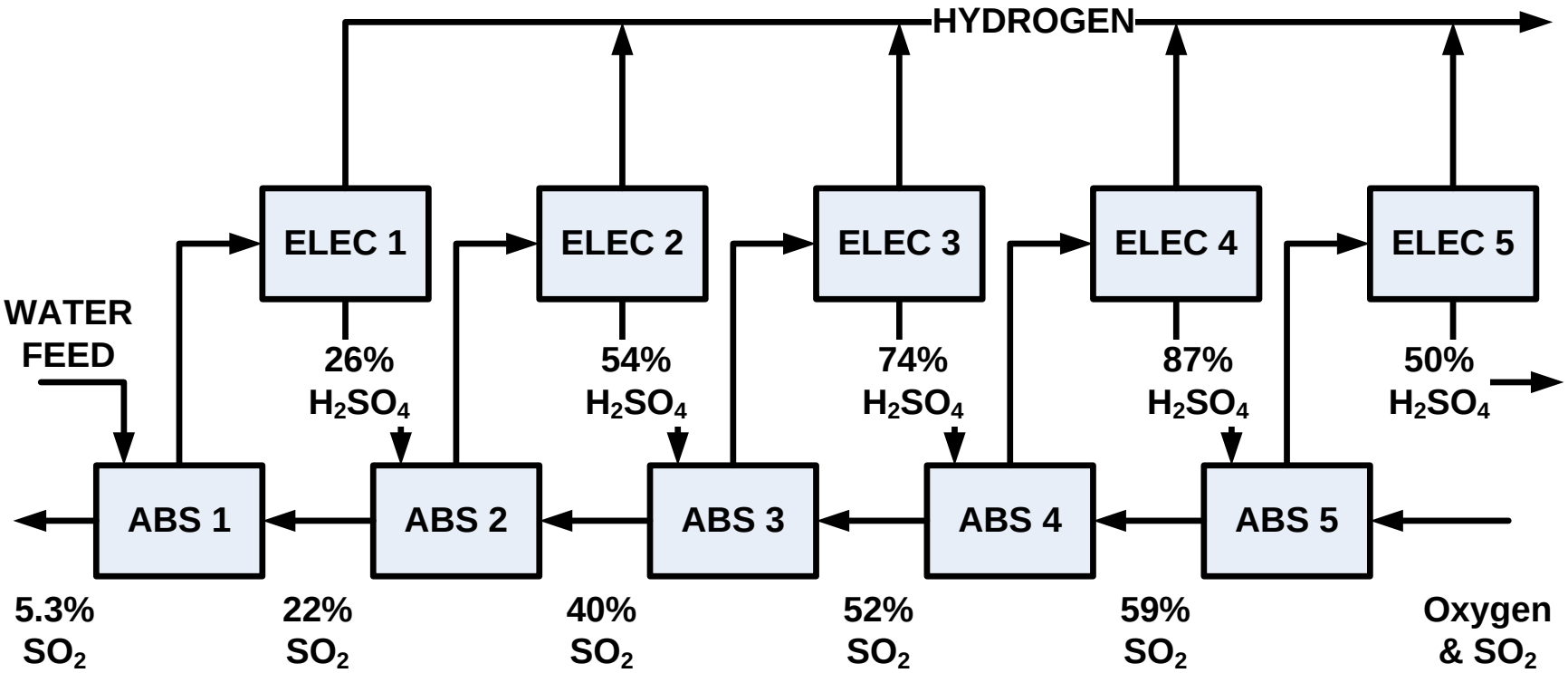

P B M R

Critical DDNs

- Decomposition catalyst
- Materials of construction
  - Decomposer and Concentrator
  - Ceramic to metal joints
  - Supplementary Materials
  - Control and Instrumentation
- Electrolyzer development
- Confirmation
  - Basic data
  - Concentrator and Absorber mass transfer characteristics

P B M R

Complexity and Risks

- Closed loop system
  - Impurity concentration: may require an acid purification step
  - Process stability
- Decomposer
  - Flow distribution
  - Temperature distribution
  - Catalyst replacement
  - Concentrator/ Decomposer integration
    - Design
    - Startup and Shutdown
- Product purity
  - Current issue with sulfur leakage
  - Less of an issue for High Temperature Steam Electrolysis (HTSE)

P B M R

Conclusions

- Development needs may challenge the NGNP hydrogen schedule
  - HyS development plan is optimistic
  - HTSE development plan needs review
- Need to review the design for cost savings
- More detailed study is required to identify all the cost factors
  - One or two uncertain items control the cost
  - Product specification
  - Component sensitivity to impurities
- Integrated pilot plant required
  - Commercial materials of construction

P B M R

Future Studies

- Technology Selection
  - Risk and Cost analysis for HTSE
  - Engineering for cost reduction for both HTSE and HyS
  - Side-by-side comparison
- Product Specification
  - Product destination: savings for captive market like CTL
  - Are current specifications based on real requirements?
  - Price penalty for lower purity?
- Process Development
  - Operational sensitivities
  - Realistic thermal analysis
  - Conceptual designs of key components
- Materials of Construction
  - Build a data base: a material for every service

Appendix A: Table 7-A.1 Comparison of HyS and SI processes from several studies of water-splitting processes

		PBMR-PHP HyS [A-1]	**S-I, CEA [A-2]**	**S-I, GA [A-3]**	**S-I, JAEA [A-4]**	**IS, Toshiba [A-5]**
Plant Pressure	Mpa	9/4	4	7/4	NA	NA
Number of H_2 Plant Modules		4	1	1	NA	NA
Hydrogen Plant Size	kg H_2/hr	11000	7200	46440	NA	NA
Reactor Thermal Size	MWt	500	600	600	NA	NA
Reactor Recirculator Power	MWe	15.1	NA	NA	NA	NA
Number of Reactors		4	1	4	NA	NA
Thermal Use from IHX	MWt/Module	195	599	2400	NA	NA
Thermal Rejection to PCU	MWt/Module	98.4	0	0	NA	NA
Total HyS PBMR Power Allotment		23.6	0	0	NA	NA
Total Electrical Use	MWe	185	100	827	NA	NA
Total IHX Electrical Power	MWe	30.4	7.6		NA	NA
IHX Thermal Loss	MWt	14.8	3.7		NA	NA
Thermal to Electrical Efficiency		41.5%	41.5%	41.5%	41.5%	41.5%
Thermal to H_2 Efficiency (H_2 LHV)		38.0%	27.8%	35.2%	30.2%	32.9%
Thermal to H_2 Efficiency (H_2 HHV)		45.0%	32.9%	41.6%	35.7%	38.9%

Table 7-A.1 (Continued)

		PBMR-PHP HyS [A-1]	S-I, CEA [A-2]	S-I, GA [A-3]	S-I, JAEA [A-4]	IS, Toshiba [A-5]
Availability		95%	95%	95%	95%	95%
Capital Charge (10 years)	/year	11.5%	11.5%	11.5%	11.5%	11.5%
Maintenance Charge Rate	of capital cost/yr	5%	5%	5%	5%	5%
Estimated Unit Capital Cost	/kg/hr H_2	$41,000	$9,583 (Iodine cost only)	$43,547	$157,500	$43,546
Unit Electrical Cost	/MWe	$50.00	$50.00	$50.00	$50.00	$50.00
Unit Thermal Cost	/MWt	$19.00	$19.00	$19.00	$19.00	$19.00
Capital Cost Contribution	/kg H_2	$0.57	$0.13	$0.60	$2.18	$0.60
Maintenance Cost Contribution	/kg H_2	$0.25	$0.06	$0.26	$0.95	$0.26
Electrical Cost	/kg H_2	$1.09	$0.75	$0.89	NA	NA
Thermal Cost	/kg H_2	$0.67	$1.58	$0.98	NA	NA
Energy Costs	/kg H_2	$1.75	$2.33	$1.87	$2.21	$2.14
Estimated H_2 Cost	/kg H_2	$2.57	$2.52	$2.74	$5.33	$3.01
Notes on Capital Cost			I_2 cost only	Estimate capital low by factor of 1.89. If 2 decomposition reactors per MHR for 4 MHRs, cost is $8*(S1/(S1/8))^{.7}$ =1.89. Also deleted 15 MWe credit for turbines in plant	Membrane cost @100 ma/cm2 vs. water electrolysis @ 250 ma/cm2	Estimate capital cost low by factor of 1.89 based on GA estimate.

Appendix A: Table 7-A.1 Comparison of HyS and HTSE processes from several studies of water-splitting processes

	PBMR-PHP HyS [A-1]	Electrolysis [A-6]	HTSE [A-7]	HTSE [A-8]	
Plant Pressure	9/4	4	4	0.1	Mpa
Reactor Recirculator Power	15.1	15.1	15.1	15.1	MWe
Thermal Use from IHX	195	0	199.60	199.60	MWt/Module
Total HyS PBMR Power Allotment	23.6	0.0	24.1	24.1	
Total Electrical Use	185	868	1394	1394	MWe
Total IHX Electrical Power	30.4	0.0	7.6	7.6	MWe
IHX Thermal Loss	14.8	0.0	3.7	3.7	MWt
Thermal to Electrical Efficiency	41.5%	41.5%	41.5%	41.5%	
Thermal to H_2 Efficiency (H_2 LHV)	38.0%	28.6%	37.2%	37.2%	
Thermal to H_2 Efficiency (H_2 HHV)	45.0%	33.9%	44.0%	44.0%	
Availability	95%	95%	95%	95%	
Capital Charge (10 years)	11.5%	11.5%	11.5%	11.5%	/year
Maintenance Charge Rate	5%	5%	5%	5%	/yr of capital cost
Estimated Unit Capital Cost	$41,000	$63,000	$68,333	$75,646	/kg/hr H_2
Unit Electrical Cost	$50.00	$50.00	$50.00	$50.00	/MWe
Unit Thermal Cost	$19.00	$19.00	$19.00	$19.00	/MWt
Capital Cost Contribution	$0.57	$0.87	$0.94	$1.05	/kg H_2
Maintenance Cost Contribution	$0.25	$0.38	$0.41	$0.45	/kg H_2
Electrical Cost	$1.09	$2.41	$1.78	$1.78	/kg H_2
Thermal Cost	$0.67	$0.00	$0.09	$0.09	/kg H_2
Energy Costs	$1.75	$2.41	$1.88	$1.88	/kg H_2
Estimated H_2 Cost	$2.57	$3.66	$3.23	$3.38	/kg H_2
Notes on Capital Cost	W+Shaw estimate	Norsk Hydro estimate	Scaled to HyS at 300 ma/cm2 vs 500 ma/cm2 for HyS	Scaled to HyS at 271 ma/cm2 vs 500 ma/cm2 for HyS	

References

A-1 E. J. Lahoda et al., "Estimated Costs for the Improved HyS Flowsheet", HTR2006, Paper number C00000068, Johannesburg, Republic of South Africa, October, 2006.

A-2 J. Leybros, P. Anzieu, J.M. Borgard, P. Carles, G. Rodríguez, "CEA Studies on S-I Industrial Scale Process", UNLV Consortium Quarterly, December, 2005.

A-3 L. C. Brown, R. D. Lentsch, G. E. Besenbruch, K. R. Schultz, and J. E. Funk, "Alternative Flowsheets for The Sulfur-Iodine Thermochemical Hydrogen Cycle", AIChE 2003 Spring National Meeting, p. 2-5.

A-4 Kubo (JAEA), KNS Workshop, Gyeong-Ju, South Korea, Nov 2006.

A-5 Toshiba presentation on IS Flowsheet, November 9, 2006.

A-6 Norsk Hydro Presentation, Page 15, Hydro Oil and Energy Conference, February 13, 2004 ($4.70/kg H2 @ $50/MWhr electrical cost).

A-7 Yamada, Kazuya, et al., High Temperature Electrolysis for Hydrogen Production Using Solid Oxide Electrolyte Tubular Cells Assembly Unit, AIChE 2006 Annual Meeting, San Francisco, November 2005.

A-8 Presentations by Herring, Hartvigsen and Stoots at the DOE NHI Semiannual Review, Germantown, October 31 - November 01, 2006.

Appendix F – Hydrogen Quality

The hydrogen fuel quality guideline shown in Table F.1 below is based on the Society of Automotive Engineers' (SAE) specification in *SAE-2719 - Information Report on the Development of a Hydrogen Quality Guideline for Fuel Cell Vehicles.* This specification is based on a consensus between SAE and the International Standards Organization (ISO) related to the final draft hydrogen quality specification, *ISO/FDTS 14687-2,* which is currently in the ratification process. The primary purpose of this specification is to ensure acceptable fuel cell performance and durability in current demonstration vehicles. It does not take into account the economic impact of producing hydrogen of this quality. The limits in the table below are upper limits except for the hydrogen fuel index, which is a lower limit. Economic analysis of hydrogen production, delivery, and storage technologies; fuel quality R&D, fuel cell testing, and operational data from fuel cell vehicles; or improvements in the impurity tolerance of fuel cells, may lead to revisions of these limits. Hydrogen Program R&D planning will address hydrogen quality issues as they relate to cost and performance goals for each technology area – production, delivery, storage, fuel cells, safety, codes and standards. Those issues and R&D activities specific to each of these areas will be included in those sections of the RD&D Plan.

Table F.1. Hydrogen Fuel Quality Guideline

Constituent	Units	Chemical Formula	Limit
Hydrogen fuel index	vol% *	H_2	≥99.99%
Non-hydrogen constituents			
Total Non-Particulates	µmol/mol		100
Water[a]	µmol/mol	H_2O	5
Total hydrocarbons[b] (C_1 basis)	µmol/mol		2
Oxygen	µmol/mol	O_2	5
Helium, Nitrogen, Argon	µmol/mol	He, N_2, Ar	100
Carbon dioxide[c]	µmol/mol	CO_2	1
Carbon monoxide	µmol/mol	CO	0.2
Total sulfur [d]	µmol/mol		0.004
Formaldehyde	µmol/mol	HCHO	0.01
Formic acid	µmol/mol	HCOOH	0.2
Ammonia	µmol/mol	NH_3	0.1
Total halogenates[e]	µmol/mol		0.05
Max. Particulate Size	µm		< 10
Particulate Concentration	µg/L H_2		1

* µmol/mol is also designated: ppm

[a] Due to water threshold level, the following constituents should not be found, however should be tested if there is a question on water cotent:
Sodium (Na+) @.< 0.05 µmole/mole H_2 or < 0.05 µg/liter
Potassium (K+).@ .<0.05 µmole/mole H_2 or < 0.08 µg/liter
or Potassium hydroxide (KOH) @ < 0.05µmole/mole H_2 or < 0.12- µg/liter

[b] Includes, for example, ethylene, propylene, acetylene, benzene, phenol (parafins, olefins, aromatic compounds, alcohols, aldehydes). Total hydrocarbons may exceed 2 µmole/mole due only to CH_4 if the total does not exceed 100 µmole/mole.

[c] The SAE document does not conform with ISO on CO_2. SAE has agreed to harmonize that with ISO in the first revision cycle.

[d] Includes, for example, hydrogen sulfide (H_2S), carbonyl sulfide (COS), carbon disulfide (CS_2) and mercaptans

[e] Includes, for example, hydrogen bromide (HBr), hydrogen chloride (HCl), chlorine (Cl_2) and organic halides (R-X)

Shaw® Stone & Webster, Inc.

FEED AND UTILITY SYSTEM EQUIPMENT LIST

NGNP

Battelle Energy Alliance (BEA), LLC

Idaho Falls, Idaho

Stone & Webster Project No. 123910

ISSUE	DATE	DESCRIPTION	ORIGR	CHK'R	SDE	PEM	INTERDISCIPLINE REVIEW		
							DISCIPLINE	REV'R	DATE
							Process		
							Mechanical		
							Civil/Structural		
							Control Systems		
							Power Systems		
							Piping		
							Material & Corr.		
0	5/21/07	For PCDR	JCB	COB	COB				

FILE NAME	SHEET	DOC.NO.
App-D NGNP HPS FUS Equipment List 20may07 .doc	1 of 6	123910-T-EQL-HPS 1-0

EQUIPMENT LIST – VESSELS / REACTORS

Client: Battelle Energy Alliance (BEA), LLC | Signature: JCB

Unit: NGNP | Location: Idaho Falls, Idaho

Item No.	Name	Diameter (mm)	Length (mm)	Horizon/ Vertical	Mechanical Design		Material C.A. (mm)	PFD	Remarks
					Pressure (bar g)	Temperature (°C)			
HPS-FUS-MS-116	H_2SO_4 Make-up Drum	4200	12600	H	2	50	TFE lined C.S.	202-1	

Note: Above data (except for Item No. and name) shall not be used for design purposes. For this purpose the data on the relevant specification/data sheets shall be used

EQUIPMENT LIST – LOW PRESSURE TANKS

Client: Battelle Energy Alliance (BEA), LLC Signature: JCB

Unit: **NGNP** Location: Idaho Falls, Idaho

Item No.	Name	Diameter (mm)	Height (mm)	Mechanical Design		Material C.A. (mm)	PFD	Remarks
				Pressure (Barr (g))	Temperature (°C)			
HPS-FUS MT-101	NaOH Mixing Tank	6000	7000	ATM	50	C.S.	204-2	
HPS-FUS MT-102	Filtered Water Storage Tank							120,000 gal.

Note: Above data (except for Item No. and name) shall not be used for design purposes. For this purpose the data on the relevant specification/data sheets shall be used

EQUIPMENT LIST – PUMPS

Client: Battelle Energy Alliance (BEA), LLC Signature: JCB

Unit: **NGNP** Location: Idaho Falls, Idaho

Item No.	Name	Type	Rated Flow (m^3 /h)	Differential Pressure bar	Motor kW	Material		PFD	Remarks
						Casing	Impeller		
HPS-FUS PP-102 A/S	NaOH Solution Supply Pump	Rotary	2	40	1.5	C.S.	C.S.	204-2	2 hp
HPS-FUS-PP-106 A/S	H_2SO_4 Make-up Pump	Centrif.	30	3.0	5.5 (7.5)	High Si Iron	Alloy 20	202-1	Design Pressure: 6 bar(g)

Note: Above data (except for Item No. and name) shall not be used for design purposes. For this purpose the data on the relevant specification/data sheets shall be used

EQUIPMENT LIST – MISCELLANEOUS

Client: Battelle Energy Alliance (BEA), LLC | Signature: JCB

Unit: **NGNP** | Location: Idaho Falls, Idaho

Item No.	Name	Material	PFD	Duty - Description - Remarks
HPS-FUS GZ-101	Water Treatment Package Unit			Fully assembled enclosed skid $1,000,000 vendor quote, minimal installation 4m x 12m pad required

Note: Above data (except for Item No. and name) shall not be used for design purposes. For this purpose the data on the relevant specification/data sheets shall be used

EQUIPMENT LIST – HEAT EXCHANGERS

Client: Battelle Energy Alliance (BEA), LLC | Signature: JCB

Unit: **NGNP** | Location: Idaho Falls, Idaho

Item No.	Name	Area (m^2)	Mechanical Design		Type	PFD	Remarks
			Shell	Tube			
			Material Pressure (bar g) Temperature (^oC)	Material Pressure (bar g) Temperature (^oC)			
HPS-PPV TT-108	NaOH Solution Cooler	25	Carbon Steel 43 80	304 SS 43 65	BEU	204-2	187,000 Btu/h 55 kW

Note: Above data (except for Item No. and name) shall not be used for design purposes. For this purpose the data on the relevant specification/data sheets shall be used

Sulfuric Acid Decomposition Material Balance

Decomp Reactor																	
Stream Name			Sulfuric Acid Decomposer Feed					Decomposed Sox					Absorber 5 Gas Feed				
Westing House Str. #			1					75					66				
PFD Stream #			2					3					4				
Vap. Mass Frac.			0.0000					1.0000					1.0000				
Density Liquid (kg/m^3)			863.27					N/A					N/A				
Density Vapor (kg/m^3)			N/A					74.43					50.32				
Phase			L					V					V				
			Per Reactor					Westinghouse					Westinghouse				
COMPONENTS		MW	Mole Flow	Mole Flow	Mass Flow	Mole Frac	Mass Frac	Mole Flow	Mole Flow	Mass Flow	Mole Frac	Mass Frac	Mole Flow	Mole Flow	Mass Flow	Mole Frac	Mass Frac
			kmol/s	kmol/s	kg/s			kmol/s	kmol/s	kg/s			kmol/s	kmol/s	kg/s		
Water	H2O	18	0.799	0.201	3.623	0.492	0.151	1.593	0.401	7.221	0.610	0.302	2.519	0.633	11.415	0.811	0.592
Sulfur Dioxide	SO2	64	0.006	0.002	0.098	0.004	0.004	0.397	0.100	6.394	0.152	0.268	0.391	0.098	6.296	0.126	0.326
Sulfuric Acid	H2SO4	98	0.819	0.206	20.215	0.504	0.845	0.024	0.006	0.594	0.009	0.025	0.000	0.000	0.002	0.000	0.000
Oxygen	O2	32	0.000	0.000	0.000	0.000	0.000	0.195	0.049	1.572	0.075	0.066	0.195	0.049	1.572	0.063	0.082
Hydrogen	H2	2	0.000	0.000	0.000	0.000	0.000	0.000	0.000	0.000	0.000	0.000	0.000	0.000	0.000	0.000	0.000
Sulfur Trioxide	SO3	80	0.000	0.000	0.000	0.000	0.000	0.403	0.101	8.116	0.154	0.340	0.000	0.000	0.000	0.000	0.000
Helium-4	He	4	0.000	0.000	0.000	0.000	0.000	0.000	0.000	0.000	0.000	0.000	0.000	0.000	0.000	0.000	0.000
Total			1.625	0.409	23.937	1.000	1.000	2.613	0.657	23.898	1.000	1.000	3.105	0.781	19.285	1.000	1.000
Temperature	°C		524					872					333				
Pressure	MPa		8.91					8.7					8.69				

Concentrator								Acid Loop Management									
Stream Name			ConcentratorFeed From Storage Tank					Make-Up H2SO4					Process Blowdown				
Westing House Str. #			40					N/A					N/A				
PFD Stream #			5					30					46				
Vap. Frac.			0.0000					0.0000					0.0000				
Density Liquid (kg/m^3)			1257.76					1828.553					1828.553				
Density Vapor (kg/m^3)			N/A					N/A					N/A				
Phase			L					N/A					N/A				
			Westinghouse					Westinghouse					Westinghouse				
COMPONENTS		MW	Mole Flow	Mole Flow	Mass Flow	Mole Frac	Mass Frac	Mole flow	Mole Flow	Mass Flow	Mole Frac	Mass Frac	Mole flow	Mole Flow	Mass Flow	Mole Frac	Mass Frac
			kmol/s	kmol/s	kg/s				kmol/s	kg/s				kmol/s	kg/s		
Water	H2O	18	2.518	0.633	11.412	0.866	0.542	0.000	0.000	0.000	0.000	0.000	0.000	0.000	0.000	0.000	0.000
Sulfur Dioxide	SO2	64	0.000	0.000	0.000	0.000	0.000	0.000	0.000	0.000	0.000	0.000	0.000	0.000	0.000	0.000	0.000
Sulfuric Acid	H2SO4	98	0.391	0.098	9.637	0.134	0.458	0.011	0.0028	0.273	1.000	1.000	0.006	0.0014	0.140	1.000	1.000
Oxygen	O2	32	0.000	0.000	0.000	0.000	0.000	0.000	0.000	0.000	0.000	0.000	0.000	0.000	0.000	0.000	0.000
Hydrogen	H2	2	0.000	0.000	0.000	0.000	0.000	0.000	0.000	0.000	0.000	0.000	0.000	0.000	0.000	0.000	0.000
Sulfur Trioxide	SO3	80	0.000	0.000	0.000	0.000	0.000	0.000	0.000	0.000	0.000	0.000	0.000	0.000	0.000	0.000	0.000
Helium-4	He	4	0.000	0.000	0.000	0.000	0.000	0.000	0.000	0.000	0.000	0.000	0.000	0.000	0.000	0.000	0.000
Total			2.909	0.732	21.048	1.000	1.000	0.011	0.003	0.273	1.000	1.000	0.006	0.001	0.140	1.000	1.000
Temperature	°C		202					25					34				
Pressure	MPa		8.79					0.10					0.10				

Shaw® Stone & Webster, Inc.

SULFURIC ACID DECOMPOSITON SYSTEM EQUIPMENT LIST

NGNP

Battelle Energy Alliance (BEA), LLC

Idaho Falls, Idaho

Stone & Webster Project No. 123910

ISSUE	DATE	DESCRIPTION	ORIGR	CHK'R	SDE	PEM	INTERDISCIPLINE REVIEW		
							DISCIPLINE	REV'R	DATE
							Process		
							Mechanical		
							Civil/Structural		
							Control Systems		
							Power Systems		
							Piping		
							Material & Corr.		
0	5/20/07	FOR PCDR	JCB	nln	COB				

FILE NAME	SHEET	DOC.NO.
NGNP SAD Equipment List B 22Mar07.doc	1 of 7	123910-T-EQL-HPS 2-0

EQUIPMENT LIST - TOWERS

Client: Battelle Energy Alliance (BEA), LLC | Signature: JCB

Unit: NGNP | Location: Idaho Falls, Idaho

Item No.	Name	Diameter (mm)	Height (mm)	Packing/ Trays	Mechanical Design		Material		PFD	Remarks
					Press (bar g)	Temp (°C)	Shell C.A. (mm)	Packing Trays		
HPS-SAD-AS-201	H_2SO_4 Concentrator	1500	9000	7 m^3 packing	97	875	Alloy 617	Alumina	202-2	2- Alloy 617 quench trays below the packing

Note: Above data (except for Item No. and name) shall not be used for design purposes. For this purpose the data on the relevant specification/data sheets shall be used

EQUIPMENT LIST – VESSELS / REACTORS

Client: Battelle Energy Alliance (BEA), LLC Signature: JCB

Unit: NGNP Location: Idaho Falls, Idaho

Item No.	Name	Diameter (mm)	Length (mm)	Horizon/ Vertical	Mechanical Design		Material C.A. (mm)	PFD	Remarks
					Pressure (bar g)	Temperature (°C)			
HPS-SAD-MR-201	H_2SO_4 Decomposer	3400	6100	V	97	950	Alloy 617 & silicon carbide	202-2	Vessel internally insulated. Includes tube sheet and 1850 silicon carbide tubes 2 in dia. X 14 ft. long. Each with an internal dip tube extending the length and partially packed with catalyst
HPS-SAD-MS-202	H_2SO_4 Flash Drum	1200	3500	V	6	120	TFE lined C.S.	202-1	
HPS-SAD-MS-203	H_2SO_4 Decomposer Feed Drum	2500	7000	V	3	50	TFE lined C.S.	202-2	
HPS-SAD-MS-222	SO_x V/L Separator	1100	6100	H	94	285	Hastelloy C	202-2	

Note: Above data (except for Item No. and name) shall not be used for design purposes. For this purpose the data on the relevant specification/data sheets shall be used

EQUIPMENT LIST – LOW PRESSURE TANKS

Client: Battelle Energy Alliance (BEA), LLC | Signature: JCB

Unit: **NGNP** | Location: Idaho Falls, Idaho

Item No.	Name	Diameter (mm)	Height (mm)	Mechanical Design		Material C.A. (mm)	PFD	Remarks
				Pressure (bar (g))	Temperature (°C)			
HPS-SAD-MT-215	H_2SO_4 Storage Tank	10000	10000	0.0037 (ATM)	50	TFE lined C.S.	202-1	

Note: Above data (except for Item No. and name) shall not be used for design purposes. For this purpose the data on the relevant specification/data sheets shall be used

EQUIPMENT LIST – PUMPS

Client: Battelle Energy Alliance (BEA), LLC Signature: JCB

Unit: **NGNP** Location: Idaho Falls, Idaho

Item No.	Name	Type	Rated Flow (m^3 /h)	Differential Pressure bar	Motor kW (HP)	Material		PFD	Remarks
						Casing	Impeller		
HPS-SAD-PP-207 A/S	H_2SO_4 Decomposer Feed Pump	Multi-stage centrif.	60	92	250 (350)	High Si Iron	Alloy 20	202-2	Design Pressure 105 bar(g)
HPS-SAD-PP-218 A/S	H_2SO_4 Transfer Pump	Centrif.	60	3.0	11.2 (15)	High Si Iron	Alloy 20	202-1	Design Pressure: 6 bar(g)

Note: Above data (except for Item No. and name) shall not be used for design purposes. For this purpose the data on the relevant specification/data sheets shall be used

EQUIPMENT LIST – COMPRESSORS / BLOWERS / VACUUM PUMPS

Client: Battelle Energy Alliance (BEA), LLC | Signature: JCB

Unit: **NGNP** | Location: Idaho Falls, Idaho

Item No.	Name	Type	Capacity (Am^3/h)	Suction Pressure (bar g)	Differential Pressure (bar)	Driver		Material C.A.(mm)	PFD	Remarks
						Type	Rated Power (kW)			
HPS-SAD PC-201	O_2 Off Gas Compressor	Recip.	9.6	1.5	39.3	motor	3	316SS	202-1	

Note: Above data (except for Item No. and name) shall not be used for design purposes. For this purpose the data on the relevant specification/data sheets shall be used

EQUIPMENT LIST – HEAT EXCHANGERS

Client: Battelle Energy Alliance (BEA), LLC Signature: JCB

Unit: **NGNP** Location: Idaho Falls, Idaho

Item No.	Name	Area (m^2)	Mechanical Design		Type	PFD	Remarks
			Shell	Tube			
			Material Pressure (bar g) Temperature (^oC)	Material Pressure (bar g) Temperature (^oC)			
HPS-SAD TT-201	H_2SO_4 Concentrator Recuperator	81	Hastelloy C 90 230	Hastelloy C 90 350	DEU	202-2	5.73 MW
HPS-SAD TA-202	SOx Air Cooler	1960 (Bare Tube)		Hastelloy C 87 310	Air Fin	202-2	22.8 MWth, 6 Bays, 12 Fans, 8.5 kW/fan
HPS-SAD TT-213	Oxygen Cooler	2	C.S. 6 50	304SS 43 120	Double Pipe	202-1	2.0 E-4 MW
HPS-SAD TT-214	H_2SO_4 Recycle Cooler	175	C.S. 6 50	Hastelloy C 7.5 90	3 shells each BEU	202-1	2.09 MW

Note: Above data (except for Item No. and name) shall not be used for design purposes. For this purpose the data on the relevant specification/data sheets shall be used

JCB

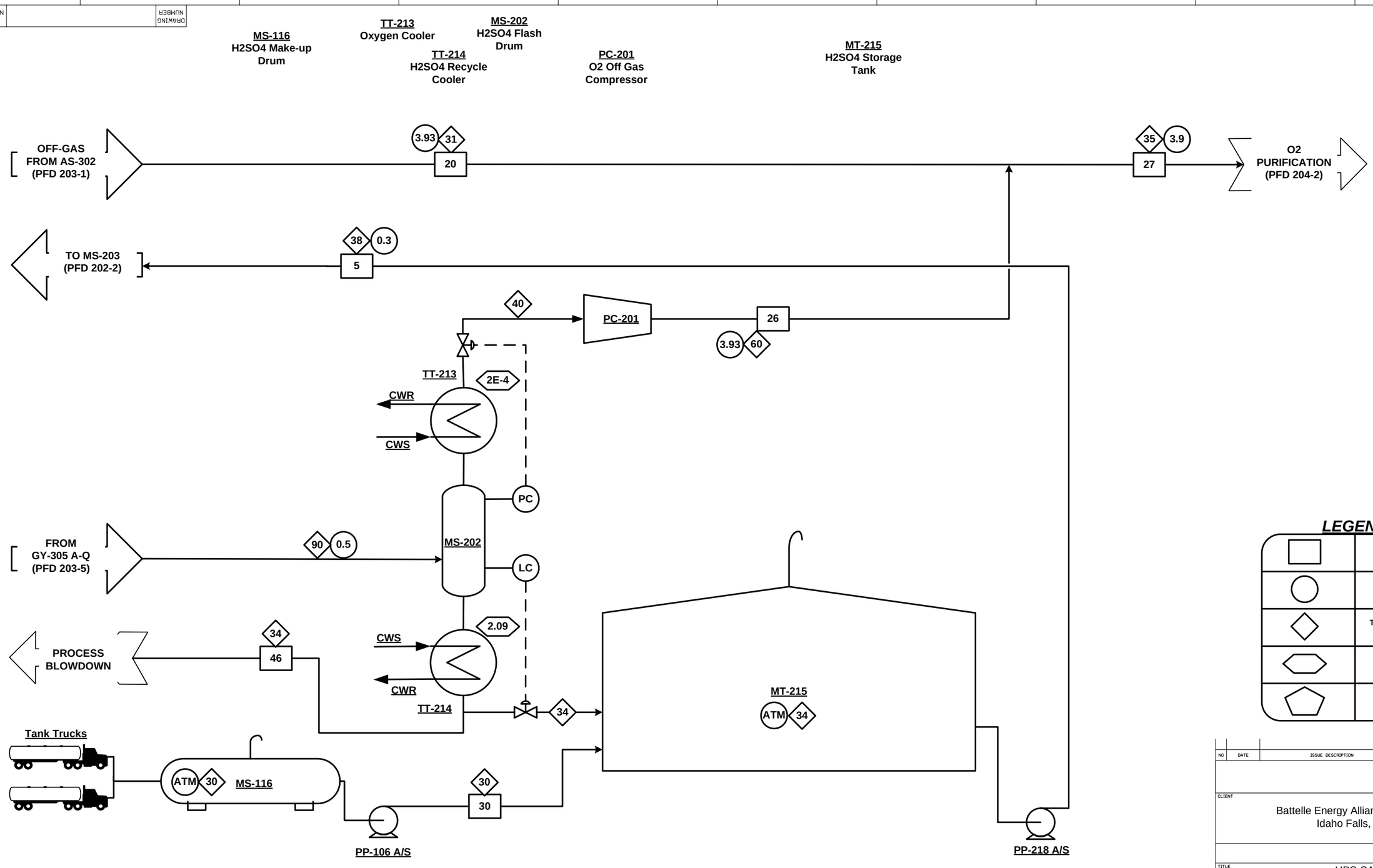

PP-106 A/S
H2SO4 Make-Up Pump

PP-218 A/S
H2SO4 Transfer Pump

LEGEND

▭	STREAM #
○	PRESSURE (MPa)
◇	TEMPERATURE (°C)
⬡	DUTY (MWth)
⬠	DUTY (MWe)

NO	DATE	ISSUE DESCRIPTION	BY	CHKD	DISCP	APPR

CLIENT

Battelle Energy Alliance (BEA) LLC
Idaho Falls, Idaho

TITLE

HPS-SAD
Process Flow Diagram
Storage Tank

NGNP-13-DWG-202-1

DESIGNED BY | DRAWN BY | CHECKED BY
RESP. ENGR. | CERT. FOR CONST.

SCALE	DRAWING NUMBER	REV NO

REV NUMBER | DRAWING NUMBER

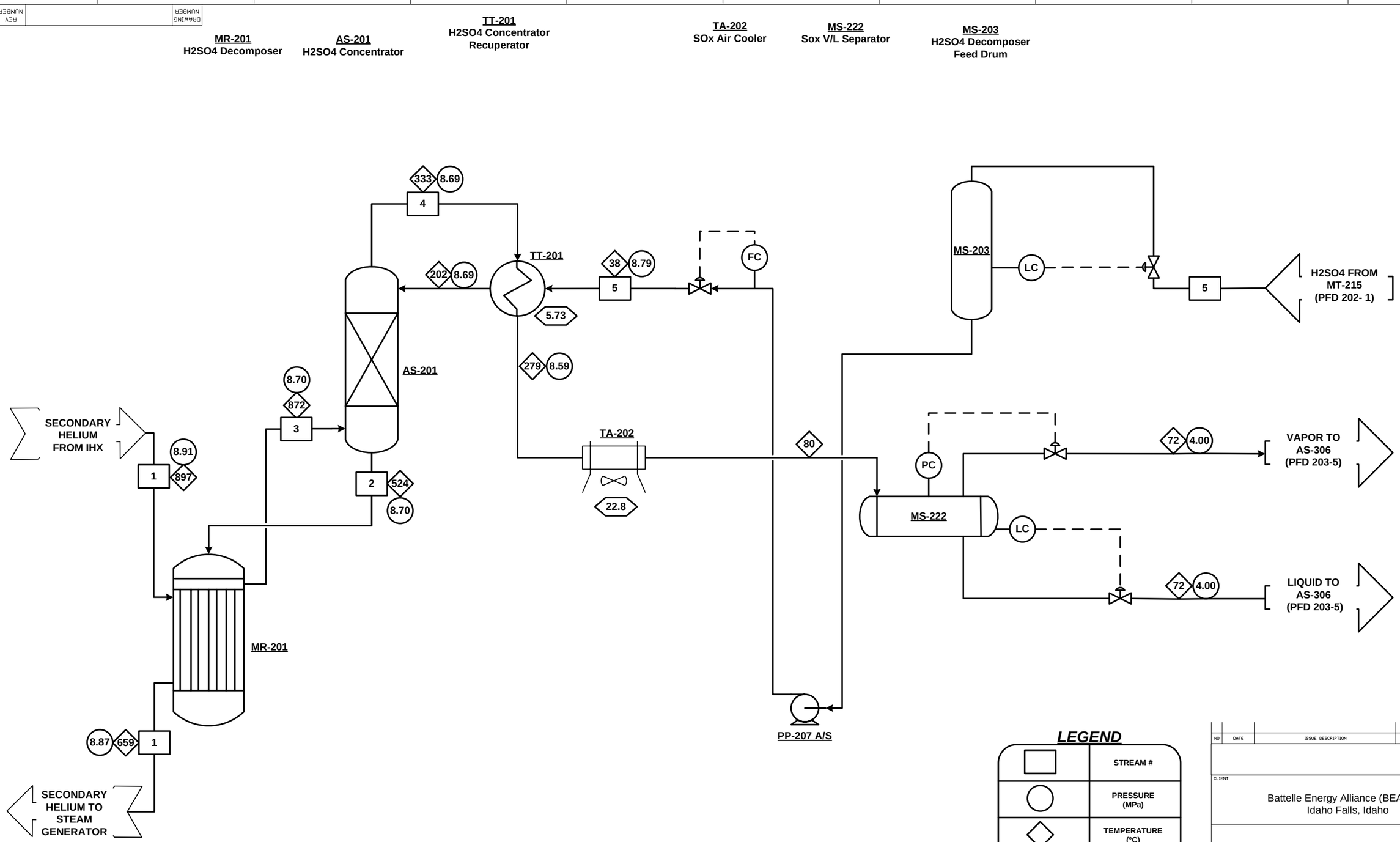

PP-207 A/S
H2SO4 Decomposer
Feed Pump

LEGEND

▭	STREAM #
○	PRESSURE (MPa)
◇	TEMPERATURE (°C)
⬡	DUTY (MWth)
⬠	DUTY (MWe)

NO	DATE	ISSUE DESCRIPTION	BY	CHKD	DISCP	APPR

CLIENT

Battelle Energy Alliance (BEA) LLC
Idaho Falls, Idaho

TITLE

HPS-SAD
Process Flow Diagram
H_2SO_4 Decomposition

NGNP-13-DWG-202-2

DESIGNED BY | DRAWN BY | CHECKED BY
RESP. ENGR. | CERT. FOR CONST.

SCALE	DRAWING NUMBER	REV NO

Electrolysis System Material Balance

Stream Name			Absorber 5 Off-Gas					Absorber 4 Off Gas					Absorber 3 Off Gas				
Westing House Str. #			214					162					203				
PFD Stream #			6					7					8				
Density Liquid (kg/m^3)			N/A					N/A					N/A				
Density Vapor (kg/m^3)			74.43					67.52					60.44				
Phase			V					V					V				
			Westinghouse	NGNP				Westinghouse	NGNP				Westinghouse	NGNP			
COMPONENTS		MW	Mole flow	Mole Flow	Mass Flow	Mole Frac	Mass Frac	Mole flow	Mole Flow	Mass Flow	Mole Frac	Mass Frac	Mole flow	Mole Flow	Mass Flow	Mole Frac	Mass Frac
			kmol/s	kmol/s	kg/s			kmol/s	kmol/s	kg/s			kmol/s	kmol/s	kg/s		
Water	H2O	18	0.000	0.000	0.000	0.000	0.000	0.000	0.000	0.001	0.001	0.000	0.000	0.000	0.002	0.002	0.001
Sulfur Dioxide	SO2	64	0.140	0.035	2.255	0.418	0.590	0.106	0.027	1.706	0.352	0.522	0.063	0.016	1.022	0.246	0.395
Sulfuric Acid	H2SO4	98	0.000	0.000	0.000	0.000	0.000	0.000	0.000	0.000	0.000	0.000	0.000	0.000	0.000	0.000	0.000
Oxygen	O2	32	0.194	0.049	1.565	0.581	0.410	0.194	0.049	1.564	0.647	0.478	0.194	0.049	1.563	0.753	0.604
Hydrogen	H2	2	0.000	0.000	0.000	0.000	0.000	0.000	0.000	0.000	0.000	0.000	0.000	0.000	0.000	0.000	0.000
Sulfur Trioxide	SO3	80	0.000	0.000	0.000	0.000	0.000	0.000	0.000	0.000	0.000	0.000	0.000	0.000	0.000	0.000	0.000
Helium-4	He	4	0.000	0.000	0.000	0.000	0.000	0.000	0.000	0.000	0.000	0.000	0.000	0.000	0.000	0.000	0.000
Total			0.335	0.084	3.821	1.000	1.000	0.301	0.076	3.271	1.000	1.000	0.258	0.065	2.587	1.000	1.000
Temperature	°C		60					64					61				
Pressure	MPa		3.99					3.97					3.96				

Stream Name			Absorber 2 Off Gas				
Westing House Str. #			207				
PFD Stream #			9				
Density Liquid (kg/m^3)			N/A				
Density Vapor (kg/m^3)			54.75				
Phase			V				
			Westinghouse	NGNP			
COMPONENTS		MW	Mole flow	Mole Flow	Mass Flow	Mole Frac	Mass Frac
			kmol/s	kmol/s	kg/s		
Water	H2O	18	0.000	0.000	0.002	0.002	0.001
Sulfur Dioxide	SO2	64	0.028	0.007	0.445	0.124	0.221
Sulfuric Acid	H2SO4	98	0.000	0.000	0.000	0.000	0.000
Oxygen	O2	32	0.194	0.049	1.563	0.874	0.778
Hydrogen	H2	2	0.000	0.000	0.000	0.000	0.000
Sulfur Trioxide	SO3	80	0.000	0.000	0.000	0.000	0.000
Helium-4	He	4	0.000	0.000	0.000	0.000	0.000
Total			0.222	0.056	2.011	1.000	1.000
Temperature	°C		50				
Pressure	MPa		3.95				

Electrolysis System Material Balance

Stream Name			Electrolyzer 1 Feed					Acid Pump 1 Feed					Electrolyzer 2 Feed				
Westing House Str. #			206					190					169				
PFD Stream #			10					11					12				
Density Liquid (kg/m^3)			1031.81					1182.19					1188.35				
Density Vapor (kg/m^3)			N/A					50.98					N/A				
Phase			L					V/L					L				
			Westinghouse	NGNP				Westinghouse	NGNP				Westinghouse	NGNP			
COMPONENTS		MW	Mole flow	Mole Flow	Mass Flow	Mole Frac	Mass Frac	Mole flow	Mole Flow	Mass Flow	Mole Frac	Mass Frac	Mole flow	Mole Flow	Mass Flow	Mole Frac	Mass Frac
			kmol/s	kmol/s	kg/s			kmol/s	kmol/s	kg/s			kmol/s	kmol/s	kg/s		
Water	H2O	18	0.392	0.099	1.777	0.946	0.831	0.348	0.087	1.577	0.886	0.590	0.348	0.087	1.576	0.813	0.486
Sulfur Diox	SO2	64	0.022	0.006	0.356	0.053	0.167	0.000	0.000	0.000	0.000	0.000	0.036	0.009	0.575	0.083	0.177
Sulfuric Ac	H2SO4	98	0.000	0.000	0.002	0.000	0.001	0.044	0.011	1.091	0.113	0.409	0.044	0.011	1.091	0.103	0.336
Oxygen	O2	32	0.000	0.000	0.002	0.001	0.001	0.000	0.000	0.002	0.001	0.001	0.000	0.000	0.002	0.001	0.001
Hydrogen	H2	2	0.000	0.000	0.000	0.000	0.000	0.000	0.000	0.000	0.000	0.000	0.000	0.000	0.000	0.000	0.000
Sulfur Trio	SO3	80	0.000	0.000	0.000	0.000	0.000	0.000	0.000	0.000	0.000	0.000	0.000	0.000	0.000	0.000	0.000
Helium-4	He	4	0.000	0.000	0.000	0.000	0.000	0.000	0.000	0.000	0.000	0.000	0.000	0.000	0.000	0.000	0.000
Total			0.415	0.104	2.138	1.000	1.000	0.392	0.099	2.670	1.000	1.000	0.428	0.108	3.244	1.000	1.000
Temperature	°C		44					30					60				
Pressure	MPa		3.95					3.95					3.96				

Stream Name			Acid Pump 2 Feed					Electrolyzer 3 Feed					Acid Pump 3 Feed				
Westing House Str. #			189					44					215				
PFD Stream #			13					14					15				
Density Liquid (kg/m^3)			1423.92					1373.37					1640.59				
Density Vapor (kg/m^3)			N/A					N/A					N/A				
Phase			L					L					L				
			Westinghouse	NGNP				Westinghouse	NGNP				Westinghouse	NGNP			
COMPONENTS		MW	Mole flow	Mole Flow	Mass Flow	Mole Frac	Mass Frac	Mole flow	Mole Flow	Mass Flow	Mole Frac	Mass Frac	Mole flow	Mole Flow	Mass Flow	Mole Frac	Mass Frac
			kmol/s	kmol/s	kg/s			kmol/s	kmol/s	kg/s			kmol/s	kmol/s	kg/s		
Water	H2O	18	0.276	0.070	1.253	0.705	0.305	0.276	0.069	1.252	0.636	0.262	0.192	0.048	0.869	0.489	0.150
Sulfur Diox	SO2	64	0.000	0.000	0.000	0.000	0.000	0.042	0.011	0.681	0.097	0.142	0.000	0.000	0.000	0.000	0.000
Sulfuric Ac	H2SO4	98	0.116	0.029	2.851	0.295	0.694	0.116	0.029	2.851	0.266	0.596	0.200	0.050	4.936	0.510	0.850
Oxygen	O2	32	0.000	0.000	0.002	0.001	0.000	0.000	0.000	0.003	0.001	0.001	0.000	0.000	0.003	0.001	0.001
Hydrogen	H2	2	0.000	0.000	0.000	0.000	0.000	0.000	0.000	0.000	0.000	0.000	0.000	0.000	0.000	0.000	0.000
Sulfur Trio	SO3	80	0.000	0.000	0.000	0.000	0.000	0.000	0.000	0.000	0.000	0.000	0.000	0.000	0.000	0.000	0.000
Helium-4	He	4	0.000	0.000	0.000	0.000	0.000	0.000	0.000	0.000	0.000	0.000	0.000	0.000	0.000	0.000	0.000
Total			0.392	0.099	4.106	1.000	1.000	0.434	0.109	4.787	1.000	1.000	0.392	0.099	5.809	1.000	1.000
Temperature	°C		60					67					67				
Pressure	MPa		3.958					3.97					3.97				

Electrolysis System Material Balance

Stream Name			Electrolyzer 4 Feed					Acid Pump 4 Feed					Electrolyzer 5 Feed				
Westing House Str. #			170					216					102				
PFD Stream #			16					17					18				
Density Liquid (kg/m^3)			1559.75					1796.07					1131.35				
Density Vapor (kg/m^3)			N/A					N/A					N/A				
Phase			L					L					L				
			Westinghouse	NGNP				Westinghouse	NGNP				Westinghouse	NGNP			
COMPONENTS		MW	Mole flow	Mole Flow	Mass Flow	Mole Frac	Mass Frac	Mole flow	Mole Flow	Mass Flow	Mole Frac	Mass Frac	Mole flow	Mole Flow	Mass Flow	Mole Frac	Mass Frac
			kmol/s	kmol/s	kg/s			kmol/s	kmol/s	kg/s			kmol/s	kmol/s	kg/s		
Water	H2O	18	0.192	0.048	0.868	0.443	0.134	0.111	0.028	0.501	0.282	0.067	2.629	0.661	11.916	0.832	0.521
Sulfur Dioxide	SO2	64	0.040	0.010	0.652	0.094	0.101	0.000	0.000	0.000	0.000	0.000	0.251	0.063	4.044	0.079	0.177
Sulfuric Acid	H2SO4	98	0.200	0.050	4.936	0.462	0.764	0.281	0.071	6.934	0.717	0.932	0.280	0.071	6.915	0.089	0.302
Oxygen	O2	32	0.000	0.000	0.004	0.001	0.001	0.000	0.000	0.004	0.001	0.001	0.001	0.000	0.011	0.000	0.000
Hydrogen	H2	2	0.000	0.000	0.000	0.000	0.000	0.000	0.000	0.000	0.000	0.000	0.000	0.000	0.000	0.000	0.000
Sulfur Trioxide	SO3	80	0.000	0.000	0.000	0.000	0.000	0.000	0.000	0.000	0.000	0.000	0.000	0.000	0.000	0.000	0.000
Helium-4	He	4	0.000	0.000	0.000	0.000	0.000	0.000	0.000	0.000	0.000	0.000	0.000	0.000	0.000	0.000	0.000
Total			0.433	0.109	6.461	1.000	1.000	0.392	0.099	7.439	1.000	1.000	3.162	0.795	22.887	1.000	1.000
Temperature	°C		65					65					90				
Pressure	MPa		3.99					3.99					4.00				

Stream Name			Acid Pump 5 Feed					Absorber 1 Off Gas				
Westing House Str. #			82					41				
PFD Stream #			19					20				
Density Liquid (kg/m^3)			1131.61					N/A				
Density Vapor (kg/m^3)			N/A					52.26				
Phase			L					V				
			Westinghouse	NGNP				Westinghouse	NGNP			
COMPONENTS		MW	Mole flow	Mole Flow	Mass Flow	Mole Frac	Mass Frac	Mole flow	Mole Flow	Mass Flow	Mole Frac	Mass Frac
			kmol/s	kmol/s	kg/s			kmol/s	kmol/s	kg/s		
Water	H2O	18	2.127	0.535	9.641	0.883	0.581	0.000	0.000	0.001	0.001	0.001
Sulfur Dioxide	SO2	64	0.000	0.000	0.000	0.000	0.000	0.005	0.001	0.087	0.027	0.053
Sulfuric Acid	H2SO4	98	0.281	0.071	6.939	0.117	0.418	0.000	0.000	0.000	0.000	0.000
Oxygen	O2	32	0.001	0.000	0.011	0.001	0.001	0.194	0.049	1.561	0.972	0.947
Hydrogen	H2	2	0.000	0.000	0.000	0.000	0.000	0.000	0.000	0.000	0.000	0.000
Sulfur Trioxide	SO3	80	0.000	0.000	0.000	0.000	0.000	0.000	0.000	0.000	0.000	0.000
Helium-4	He	4	0.000	0.000	0.000	0.000	0.000	0.000	0.000	0.000	0.000	0.000
Total			2.410	0.606	16.591	1.000	1.000	0.200	0.050	1.649	1.000	1.000
Temperature	°C		90					31				
Pressure	MPa		3.87					3.93				

Electrolysis System Material Balance

Stream Name			Electrolyzer 1 H2					Electrolyzer 2 H2					Electrolyzer 3 H2				
Westing House Str. #			179					183					85				
PFD Stream #			21					22					23				
Density Liquid (kg/m^3)			N/A					N/A					N/A				
Density Vapor (kg/m^3)			2.96					2.82					2.78				
Phase			V					V					V				
			Westinghouse	NGNP				Westinghouse	NGNP				Westinghouse	NGNP			
COMPONENTS		MW	Mole flow	Mole Flow	Mass Flow	Mole Frac	Mass Frac	Mole flow	Mole Flow	Mass Flow	Mole Frac	Mass Frac	Mole flow	Mole Flow	Mass Flow	Mole Frac	Mass Frac
			kmol/s	kmol/s	kg/s			kmol/s	kmol/s	kg/s			kmol/s	kmol/s	kg/s		
Water	H2O	18	0.000	0.000	0.000	0.000	0.000	0.000	0.000	0.000	0.000	0.000	0.000	0.000	0.000	0.000	0.000
Sulfur Diox	SO2	64	0.000	0.000	0.000	0.000	0.000	0.000	0.000	0.000	0.000	0.000	0.000	0.000	0.000	0.000	0.000
Sulfuric Ac	H2SO4	98	0.000	0.000	0.000	0.000	0.000	0.000	0.000	0.000	0.000	0.000	0.000	0.000	0.000	0.000	0.000
Oxygen	O2	32	0.000	0.000	0.000	0.000	0.000	0.000	0.000	0.000	0.000	0.000	0.000	0.000	0.000	0.000	0.000
Hydrogen	H2	2	0.022	0.006	0.011	1.000	1.000	0.036	0.009	0.018	1.000	1.000	0.042	0.011	0.021	1.000	1.000
Sulfur Trio	SO3	80	0.000	0.000	0.000	0.000	0.000	0.000	0.000	0.000	0.000	0.000	0.000	0.000	0.000	0.000	0.000
Helium-4	He	4	0.000	0.000	0.000	0.000	0.000	0.000	0.000	0.000	0.000	0.000	0.000	0.000	0.000	0.000	0.000
Total			0.022	0.006	0.011	1.000	1.000	0.036	0.009	0.018	1.000	1.000	0.042	0.011	0.021	1.000	1.000
Temperature	°C		44					60					67				
Pressure	MPa		4.02					4.03					4.04				

Stream Name			Electrolyzer 4 H2					Electrolyzer 5 H2					Off Gas O2 from Storage Tank				
Westing House Str. #			192					186					23				
PFD Stream #			24					25					26				
Density Liquid (kg/m^3)			N/A					N/A					884.55				
Density Vapor (kg/m^3)			2.81					2.86					30.06				
Phase			V					V					V/L				
			Westinghouse	NGNP				Westinghouse	NGNP				Westinghouse	NGNP			
COMPONENTS		MW	Mole flow	Mole Flow	Mass Flow	Mole Frac	Mass Frac	Mole flow	Mole Flow	Mass Flow	Mole Frac	Mass Frac	Mole flow	Mole Flow	Mass Flow	Mole Frac	Mass Frac
			kmol/s	kmol/s	kg/s			kmol/s	kmol/s	kg/s			kmol/s	kmol/s	kg/s		
Water	H2O	18	0.000	0.000	0.000	0.000	0.000	0.000	0.000	0.000	0.000	0.000	0.000	0.000	0.002	0.265	0.169
Sulfur Diox	SO2	64	0.000	0.000	0.000	0.000	0.000	0.000	0.000	0.000	0.000	0.000	0.000	0.000	0.000	0.000	0.000
Sulfuric Ac	H2SO4	98	0.000	0.000	0.000	0.000	0.000	0.000	0.000	0.000	0.000	0.000	0.000	0.000	0.000	0.000	0.000
Oxygen	O2	32	0.000	0.000	0.000	0.000	0.000	0.000	0.000	0.000	0.000	0.000	0.001	0.000	0.010	0.735	0.831
Hydrogen	H2	2	0.040	0.010	0.021	1.000	1.000	0.251	0.063	0.128	1.000	1.000	0.000	0.000	0.000	0.000	0.000
Sulfur Trio	SO3	80	0.000	0.000	0.000	0.000	0.000	0.000	0.000	0.000	0.000	0.000	0.000	0.000	0.000	0.000	0.000
Helium-4	He	4	0.000	0.000	0.000	0.000	0.000	0.000	0.000	0.000	0.000	0.000	0.000	0.000	0.000	0.000	0.000
Total			0.040	0.010	0.021	1.000	1.000	0.251	0.063	0.128	1.000	1.000	0.002	0.000	0.013	1.000	1.000
Temperature	°C		65					90					60				
Pressure	MPa		4.02					3.87					3.93				

Electrolysis System Material Balance

Stream Name			Oxygen Product					Total H2 Product					Water Feed				
Westing House Str. #			83					195					6				
PFD Stream #			27					28					29				
Density Liquid (kg/m^3)			1009.77					N/A					997.268				
Density Vapor (kg/m^3)			51.45					2.88					N/A				
Phase			V/L					V					N/A				
			Westinghouse	NGNP				Westinghouse	NGNP				Westinghouse	NGNP			
COMPONENTS		MW	Mole flow	Mole Flow	Mass Flow	Mole Frac	Mass Frac	Mole flow	Mole Flow	Mass Flow	Mole Frac	Mass Frac	Mole flow	Mole Flow	Mass Flow	Mole Frac	Mass Frac
			kmol/s	kmol/s	kg/s			kmol/s	kmol/s	kg/s				kmol/s	kg/s		
Water	H2O	18	0.001	0.000	0.003	0.003	0.002	0.003	0.001	0.013	0.007	0.059	0.391	0.098	1.772	1.000	1.000
Sulfur Dioxide	SO2	64	0.005	0.001	0.087	0.027	0.052	0.000	0.000	0.000	0.000	0.000	0.000	0.000	0.000	0.000	0.000
Sulfuric Acid	H2SO4	98	0.000	0.000	0.000	0.000	0.000	0.000	0.000	0.000	0.000	0.000	0.000	0.000	0.000	0.000	0.000
Oxygen	O2	32	0.195	0.049	1.571	0.970	0.946	0.000	0.000	0.000	0.000	0.000	0.000	0.000	0.000	0.000	0.000
Hydrogen	H2	2	0.000	0.000	0.000	0.000	0.000	0.391	0.098	0.199	0.993	0.941	0.000	0.000	0.000	0.000	0.000
Sulfur Trioxide	SO3	80	0.000	0.000	0.000	0.000	0.000	0.000	0.000	0.000	0.000	0.000	0.000	0.000	0.000	0.000	0.000
Helium-4	He	4	0.000	0.000	0.000	0.000	0.000	0.000	0.000	0.000	0.000	0.000	0.000	0.000	0.000	0.000	0.000
Total			0.201	0.051	1.661	1.000	1.000	0.394	0.099	0.211	1.000	1.000	0.391	0.098	1.772	1.000	1.000
Temperature	°C		35					70					23				
Pressure	MPa		3.90					3.85					3.93				

Stream Number			Make-Up H2SO4					Make-Up H2SO4				
Westing House Str. #			N/A					N/A				
PFD Stream #			30					46				
Density Liquid (kg/m^3)			1828.553					1828.553				
Density Vapor (kg/m^3)			N/A					N/A				
Phase			N/A					N/A				
			Westinghouse	NGNP				Westinghouse	NGNP			
COMPONENTS		MW	Mole flow	Mole Flow	Mass Flow	Mole Frac	Mass Frac	Mole flow	Mole Flow	Mass Flow	Mole Frac	Mass Frac
				kmol/s	kg/s				kmol/s	kg/s		
Water	H2O	18	n/a	0.000	0.000	0.000	0.000	n/a	0.000	0.000	0.000	0.000
Sulfur Dioxide	SO2	64	n/a	0.000	0.000	0.000	0.000	n/a	0.000	0.000	0.000	0.000
Sulfuric Acid	H2SO4	98	n/a	0.0028	0.273	1.000	1.000	n/a	0.0014	0.140	1.000	1.000
Oxygen	O2	32	n/a	0.000	0.000	0.000	0.000	n/a	0.000	0.000	0.000	0.000
Hydrogen	H2	2	n/a	0.000	0.000	0.000	0.000	n/a	0.000	0.000	0.000	0.000
Sulfur Trioxide	SO3	80	n/a	0.000	0.000	0.000	0.000	n/a	0.000	0.000	0.000	0.000
Helium-4	He	4	n/a	0.000	0.000	0.000	0.000	n/a	0.000	0.000	0.000	0.000
Total			n/a	0.003	0.273	1.000	1.000	n/a	0.001	0.140	1.000	1.000
Temperature	°C		25					34				
Pressure	MPa		0.10					0.10				

Shaw® Stone & Webster, Inc.

ELECTROLYSIS SYSTEM EQUIPMENT LIST

NGNP

Battelle Energy Alliance (BEA), LLC

Idaho Falls, Idaho

Stone & Webster Project No. 123910

ISSUE	DATE	DESCRIPTION	ORIGR	CHK'R	SDE	PEM	INTERDISCIPLINE REVIEW		
							DISCIPLINE	REV'R	DATE
							Process		
							Mechanical		
							Civil/Structural		
							Control Systems		
							Power Systems		
							Piping		
							Material & Corr.		
0	5/21/07	For PCDR	JCB	nin/rrb	COB				

FILE NAME	SHEET	DOC.NO.
NGNP EL Equipment List B 22Mar07.doc	1 of 11	123910-T-EQL-HPS 3-0

EQUIPMENT LIST - TOWERS

Client: Battelle Energy Alliance (BEA), LLC Signature: JCB

Unit: NGNP Location: Idaho Falls, Idaho

Item No.	Name	Diameter (mm)	Height (mm)	Packing/ Trays	Mechanical Design		Material		PFD	Remarks
					Press (bar g)	Temp (°C)	Shell C.A. (mm)	Packing Trays		
HPS-ELE AS-302	Stage 1 SO_2 Absorber	600	6400	2800 mm Packing	43	120	TFE lined C.S.	TFE	203-1	
HPS-ELE AS-303	Stage 2 SO_2 Absorber	600	6400	2800 mm Packing	43	120	TFE lined C.S.	TFE	203-2	
HPS-ELE AS-304	Stage 3 SO_2 Absorber	600	6400	2800 mm Packing	43	120	TFE lined C.S.	TFE	203-3	
HPS-ELE AS-305	Stage 4 SO_2 Absorber	600	6400	2800 mm Packing	43	120	TFE lined C.S.	TFE	203-4	
HPS-ELE AS-306	Stage 5 SO_2 Absorber	600	3700	2800 mm Packing	43	120	TFE lined C.S.	TFE	203-5	

Note: Above data (except for Item No. and name) shall not be used for design purposes. For this purpose the data on the relevant specification/data sheets shall be used

EQUIPMENT LIST – VESSELS / REACTORS

Client: Battelle Energy Alliance (BEA), LLC Signature: JCB

Unit: NGNP Location: Idaho Falls, Idaho

Item No.	Name	Diameter (mm)	Length (mm)	Horizon/ Vertical	Mechanical Design		Material C.A. (mm)	PFD	Remarks
					Pressure (bar g)	Temperature (°C)			
HPS-ELE MS-304	Stage 5 Absorber Surge Drum	1100	3500	H	43	120	TFE lined C.S.	203-5	
HPS-ELE MS-305	Electrolyzer 1 Anolyte Reservoir	810	2400	H	43	120	TFE lined C.S.	203-1	
HPS-ELE MS-306	Electrolyzer 2 Anolyte Reservoir	830	2500	H	43	120	TFE lined C.S.	203-2	
HPS-ELE MS-307	Electrolyzer 3 Anolyte Reservoir	850	2600	H	43	120	TFE lined C.S.	203-3	
HPS-ELE MS-308	Electrolyzer 4 Anolyte Reservoir	870	2600	H	43	120	TFE lined C.S.	203-4	
HPS-ELE MS-309	Electrolyzer 5 Anolyte Reservoir	1600	4900	H	43	120	TFE lined C.S.	203-5	
HPS-ELE MS-310	Electrolyzer 1 Catholyte Reservoir	1000	3000	H	43	120	TFE lined C.S.	203-1	
HPS-ELE MS-311	Electrolyzer 2 Catholyte Reservoir	1200	3500	H	43	120	TFE lined C.S.	203-2	
HPS-ELE MS-312	Electrolyzer 3 Catholyte Reservoir	1200	3600	H	43	120	TFE lined C.S.	203-3	
HPS-ELE MS-313	Electrolyzer 4 Catholyte Reservoir	1200	3600	H	43	120	TFE lined C.S.	203-4	

Note: Above data (except for Item No. and name) shall not be used for design purposes. For this purpose the data on the relevant specification/data sheets shall be used

EQUIPMENT LIST – VESSELS / REACTORS

Client: Battelle Energy Alliance (BEA), LLC Signature: JCB

Unit: NGNP Location: Idaho Falls, Idaho

Item No.	Name	Diameter (mm)	Length (mm)	Horizon/ Vertical	Mechanical Design		Material C.A. (mm)	PFD	Remarks
					Pressure (bar g)	Temperature (°C)			
HPS-ELE MS-314	Electrolyzer 5 Catholyte Reservoir	2200	6600	H	43	120	TFE lined C.S.	203-5	
HPS-ELE MS-317A&B	Electrolyzer 1 Container	2000	8000	H	43	120	TFE lined C.S.	203-1	27 identical horizontal vessels plus two (2) in-place spares to contain operating electrolyzers; requires one removable head each, thru shell wiring, and internal tracks to support electrolyzer cells. Each vessel contains two (2) stacks); each stack is wired for about 8800 Amps, with a voltage drop of about 27 V = 238 kW per stack
HPS-ELE MS-318A&B	Electrolyzer 2 Container	2000	8000	H	43	120	TFE lined C.S.	203-2	
HPS-ELE MS-319A,B&C	Electrolyzer 3 Container	2000	8000	H	43	120	TFE lined C.S.	203-3	
HPS-ELE MS-320A,B&C	Electrolyzer 4 Container	2000	8000	H	43	120	TFE lined C.S.	203-4	
HPS-ELE MS-321A-S	Electrolyzer 5 Container	2000	8000	H	43	120	TFE lined C.S.	203-5	

Note: Above data (except for Item No. and name) shall not be used for design purposes. For this purpose the data on the relevant specification/data sheets shall be used

EQUIPMENT LIST – PUMPS

Client: Battelle Energy Alliance (BEA), LLC Signature: JCB

Unit: **NGNP** Location: Idaho Falls, Idaho

Item No.	Name	Type	Rated Flow (m^3 /h)	Differential Pressure bar	Motor kW (HP)	Material		PFD	Remarks
						Casing	Impeller		
HPS-ELE PP-301 A/S	Electrolyzer-1 Feed Pump	Centrif.	15	4.2	3.7 (5)	Hastelloy C	Hastelloy C	203-1	Design Pressure: 48 bar(g)
HPS-ELE PP-302 A/S	Electrolyzer-2 Feed Pump	Centrif.	15	4.2	2.2 (3)	Hastelloy C	Hastelloy C	203-2	Design Pressure: 48 bar(g)
HPS-ELE PP-303 A/S	Electrolyzer-3 Feed Pump	Centrif.	15	4.2	2.2 (3)	Hastelloy C	Hastelloy C	203-3	Design Pressure: 48 bar(g)
HPS-ELE PP-304 A/S	Electrolyzer-4 Feed Pump	Centrif.	15	4.2	2.2 (3)	Hastelloy C	Hastelloy C	203-4	Design Pressure: 48 bar(g)
HPS-ELE PP-305 A/S	Electrolyzer-5 Feed Pump	Centrif.	75	4.2	15 (20)	Hastelloy C	Hastelloy C	203-5	Design Pressure: 48 bar(g)
HPS-ELE PP-308 A/S	Electrolyzer -1 Anolyte Recirculation Pump	Centrif.	36	3.5	7.5 (10)	Hastelloy C	Hastelloy C	203-1	Design Pressure: 48 bar(g)
HPS-ELE PP-309 A/S	Electrolyzer -2 Anolyte Recirculation Pump	Centrif.	39	3.5	7.5 (10)	Hastelloy C	Hastelloy C	203-2	Design Pressure: 48 bar(g)
HPS-ELE PP-310 A/S	Electrolyzer -3 Anolyte Recirculation Pump	Centrif.	42	3.5	7.5 (10)	Hastelloy C	Hastelloy C	203-3	Design Pressure: 48 bar(g)
HPS-ELE PP-311 A/S	Electrolyzer -4 Anolyte Recirculation Pump	Centrif.	44	3.5	7.5 (10)	Hastelloy C	Hastelloy C	203-4	Design Pressure: 48 bar(g)

Note: Above data (except for Item No. and name) shall not be used for design purposes. For this purpose the data on the relevant specification/data sheets shall be used

EQUIPMENT LIST – PUMPS

Client: Battelle Energy Alliance (BEA), LLC | Signature: JCB

Unit: **NGNP** | Location: Idaho Falls, Idaho

Item No.	Name	Type	Rated Flow (m^3 /h)	Differential Pressure bar	Motor kW (HP)	Material		PFD	Remarks
						Casing	Impeller		
HPS-ELE PP-312 A/S	Electrolyzer -5 Anolyte Recirculation Pump	Centrif.	295	3.5	37 (50)	Hastelloy C	Hastelloy C	203-5	Design Pressure: 48 bar(g)
HPS-ELE PP-313 A/S	Electrolyzer -1 Catholyte Recirculation Pump	Centrif.	27	4.2	7.5 (10)	316SS	316SS	203-1	Design Pressure: 48 bar(g)
HPS-ELE PP-314 A/S	Electrolyzer -2 Catholyte Recirculation Pump	Centrif.	44	4.2	11 (15)	316SS	316SS	203-2	Design Pressure: 48 bar(g)
HPS-ELE PP-315 A/S	Electrolyzer -3 Catholyte Recirculation Pump	Centrif.	51	4.2	11 (15)	316SS	316SS	203-3	Design Pressure: 48 bar(g)
HPS-ELE PP-316 A/S	Electrolyzer -4 Catholyte Recirculation Pump	Centrif.	49	4.2	11 (15)	316SS	316SS	203-4	Design Pressure: 48 bar(g)
HPS-ELE PP-317 A/S	Electrolyzer -5 Catholyte Recirculation Pump	Centrif.	305	3.5	37 (50)	316SS	316SS	203-5	Design Pressure: 48 bar(g)

Note: Above data (except for Item No. and name) shall not be used for design purposes. For this purpose the data on the relevant specification/data sheets shall be used

EQUIPMENT LIST – HEAT EXCHANGERS

Client: Battelle Energy Alliance (BEA), LLC | Signature: JCB

Unit: **NGNP** | Location: Idaho Falls, Idaho

Item No.	Name	Area (m^2)	Mechanical Design		Type	PFD	Remarks
			Shell	Tube			
			Material Pressure (bar g) Temperature (^oC)	Material Pressure (bar g) Temperature (^oC)			
HPS-ELE TT-308	Electrolyzer -1 Catholyte Cooler	19	C.S. 6 50	Hastelloy C 43 120	BEU	203-1	0.384 MW
HPS-ELE TT-309	Electrolyzer -2 Catholyte Cooler	28	C.S. 6 50	Hastelloy C 43 120	BEU	203-2	0.628 MW
HPS-ELE TT-310	Electrolyzer -3 Catholyte Cooler	12	C.S. 6 50	Hastelloy C 43 120	BEU	203-3	0.73 MW
HPS-ELE TT-311	Electrolyzer -4 Catholyte Cooler	14	C.S. 6 50	Hastelloy C 43 120	BEU	203-4	0.704 MW
HPS-ELE TT-312	Electrolyzer -5 Catholyte Cooler	47	C.S. 6 50	Hastelloy C 43 120	BEU	203-5	4.38 MW
HPS-ELE TT-315	Electrolyzer -1 Anolyte Trim Cooler	30	C.S. 6 50	Hastelloy C 43 120	BEU	203-1	0.101 MW
HPS-ELE TT-316	Electrolyzer -2 Anolyte Trim Cooler	40	C.S. 6 50	Hastelloy C 43 120	BEU	203-2	0.201 MW

Note: Above data (except for Item No. and name) shall not be used for design purposes. For this purpose the data on the relevant specification/data sheets shall be used

EQUIPMENT LIST – HEAT EXCHANGERS

Client: Battelle Energy Alliance (BEA), LLC | Signature: JCB

Unit: **NGNP** | Location: Idaho Falls, Idaho

Item No.	Name	Area (m^2)	Mechanical Design		Type	PFD	Remarks
			Shell	Tube			
			Material Pressure (bar g) Temperature (^oC)	Material Pressure (bar g) Temperature (^oC)			
HPS-ELE TT-317	Electrolyzer -3 Anolyte Trim Cooler	30	C.S. 6 50	Hastelloy C 43 120	BEU	203-3	0.226 MW
HPS-ELE TT-318	Electrolyzer -4 Anolyte Trim Cooler	30	C.S. 6 50	Hastelloy C 43 120	BEU	203-4	0.201 MW

Note: Above data (except for Item No. and name) shall not be used for design purposes. For this purpose the data on the relevant specification/data sheets shall be used

EQUIPMENT LIST – MISCELLANEOUS

Client: Battelle Energy Alliance (BEA), LLC | Signature: JCB

Unit: **NGNP** | Location: Idaho Falls, Idaho

Item No.	Name	Material	PFD	Duty - Description - Remarks
HPS-ELE GY-301A&B	Electrolyzer 1	Graphite and PEM	203-1	Two (2) Units, 80 Cells per unit, 142 m^2 per unit
HPS-ELE GY-302A&B	Electrolyzer 2	Graphite and PEM	203-2	Two (2) Units, 80 Cells per unit, 142 m^2 per unit
HPS-ELE GY-303A,B&C	Electrolyzer 3	Graphite and PEM	203-3	Three (3) Units, 80 Cells per unit, 142 m^2 per unit
HPS-ELE GY-304A,B&C	Electrolyzer 4	Graphite and PEM	203-4	Three (3) Units, 80 Cells per unit, 142 m^2 per unit
HPS-ELE GY-305A-Q +R,S,T (spares)	Electrolyzer 5	Graphite and PEM	203-5	Seventeen (17) Units, 80 Cells per unit, 142 m^2 per unit
HPS-ELE GF-301	Electrolyzer 1 Anolyte Filter	TFE lined C.S.; PTFE cartridges	203-1	PALL Fluoryte™ High Flow Filter (Cartridge filter) DeltaP: 0.2 bar, Flow rate:18gpm/30'' Cartridge, No. of cartridges:2 Diameter of Filter: 0.35 m, Length: 1.02m Design Temp: 120 °C, Design Pressure: 43 Bar(g)
HPS-ELE GF-302	Electrolyzer 2 Anolyte Filter	TFE lined C.S.; PTFE cartridges	203-2	PALL Fluoryte™ High Flow Filter (Cartridge filter) DeltaP: 0.2 bar, Flow rate:18gpm/30'' Cartridge, No. of cartridges:8 Diameter of Filter: 0.7 m, Length: 1.02m Design Temp: 120 °C, Design Pressure: 43 Bar(g)

Note: Above data (except for Item No. and name) shall not be used for design purposes. For this purpose the data on the relevant specification/data sheets shall be used

EQUIPMENT LIST – MISCELLANEOUS

Client: Battelle Energy Alliance (BEA), LLC | Signature: JCB

Unit: **NGNP** | Location: Idaho Falls, Idaho

Item No.	Name	Material	PFD	Duty - Description - Remarks
HPS-ELE GF-303	Electrolyzer 3 Anolyte Filter	TFE lined C.S.; PTFE cartridges	203-3	PALL Fluoryte™ High Flow Filter (Cartridge filter) DeltaP: 0.2 bar, Flow rate:18gpm/30'' Cartridge, No. of cartridges:6 Diameter of Filter: 0.7 m, Length: 1.02m Design Temp: 120 °C, Design Pressure: 43 Bar(g)
HPS-ELE GF-304	Electrolyzer 4 Anolyte Filter	TFE lined C.S.; PTFE cartridges	203-4	PALL Fluoryte™ High Flow Filter (Cartridge filter) DeltaP: 0.2 bar, Flow rate:18gpm/30'' Cartridge, No. of cartridges:7 Diameter of Filter: 0.7 m, Length: 1.02m Design Temp: 120 °C, Design Pressure: 43 Bar(g)
HPS-ELE GF-305	Electrolyzer 5 Anolyte Filter	TFE lined C.S.; PTFE cartridges	203-5	PALL Fluoryte™ High Flow Filter (Cartridge filter) DeltaP: 0.2 bar, Flow rate:18gpm/30'' Cartridge, No. of cartridges:34 Diameter of Filter: 1.5 m, Length: 1.02m Design Temp: 120 °C, Design Pressure: 43 Bar(g)
HPS-ELE GF-306	Electrolyzer 1 Catholyte Filter	304SS, PTFE Cartridges	203-1	PALL Fluoryte™ High Flow Filter (Cartridge filter) DeltaP: 0.2 bar, Flow rate:18gpm/30'' Cartridge, No. of cartridges:5 Diameter of Filter: 0.7 m, Length: 1.02m Design Temp: 120 °C, Design Pressure: 43 Bar(g)
HPS-ELE GF-307	Electrolyzer 2 Catholyte Filter	304SS, PTFE Cartridges	203-2	PALL Fluoryte™ High Flow Filter (Cartridge filter) DeltaP: 0.2 bar, Flow rate:18gpm/30'' Cartridge, No. of cartridges:9 Diameter of Filter: 0.75 m, Length: 1.02m Design Temp: 120 °C, Design Pressure: 43 Bar(g)
HPS-ELE GF-308	Electrolyzer 3 Catholyte Filter	304SS, PTFE Cartridges	203-3	PALL Fluoryte™ High Flow Filter (Cartridge filter) DeltaP: 0.2 bar, Flow rate:18gpm/30'' Cartridge, No. of cartridges:9 Diameter of Filter: 0.75 m, Length: 1.02m Design Temp: 120 °C, Design Pressure: 43 Bar(g)

Note: Above data (except for Item No. and name) shall not be used for design purposes. For this purpose the data on the relevant specification/data sheets shall be used

EQUIPMENT LIST – MISCELLANEOUS

Client: Battelle Energy Alliance (BEA), LLC | Signature: JCB

Unit: **NGNP** | Location: Idaho Falls, Idaho

Item No.	Name	Material	PFD	Duty - Description - Remarks
HPS-ELE GF-309	Electrolyzer 4 Catholyte Filter	304SS, PTFE Cartridges	203-4	PALL Fluoryte™ High Flow Filter (Cartridge filter) DeltaP: 0.2 bar, Flow rate:18gpm/30'' Cartridge, No. of cartridges:10 Diameter of Filter: 0.75 m, Length: 1.02m Design Temp: 120 °C, Design Pressure: 43 Bar(g)
HPS-ELE GF-310	Electrolyzer 5 Catholyte Filter	304SS, PTFE Cartridges	203-5	PALL Fluoryte™ High Flow Filter (Cartridge filter) DeltaP: 0.2 bar, Flow rate:18gpm/30'' Cartridge, No. of cartridges:52 Diameter of Filter: 1.75 m, Length: 1.02m Design Temp: 120 °C, Design Pressure: 43 Bar(g)

Note: Above data (except for Item No. and name) shall not be used for design purposes. For this purpose the data on the relevant specification/data sheets shall be used

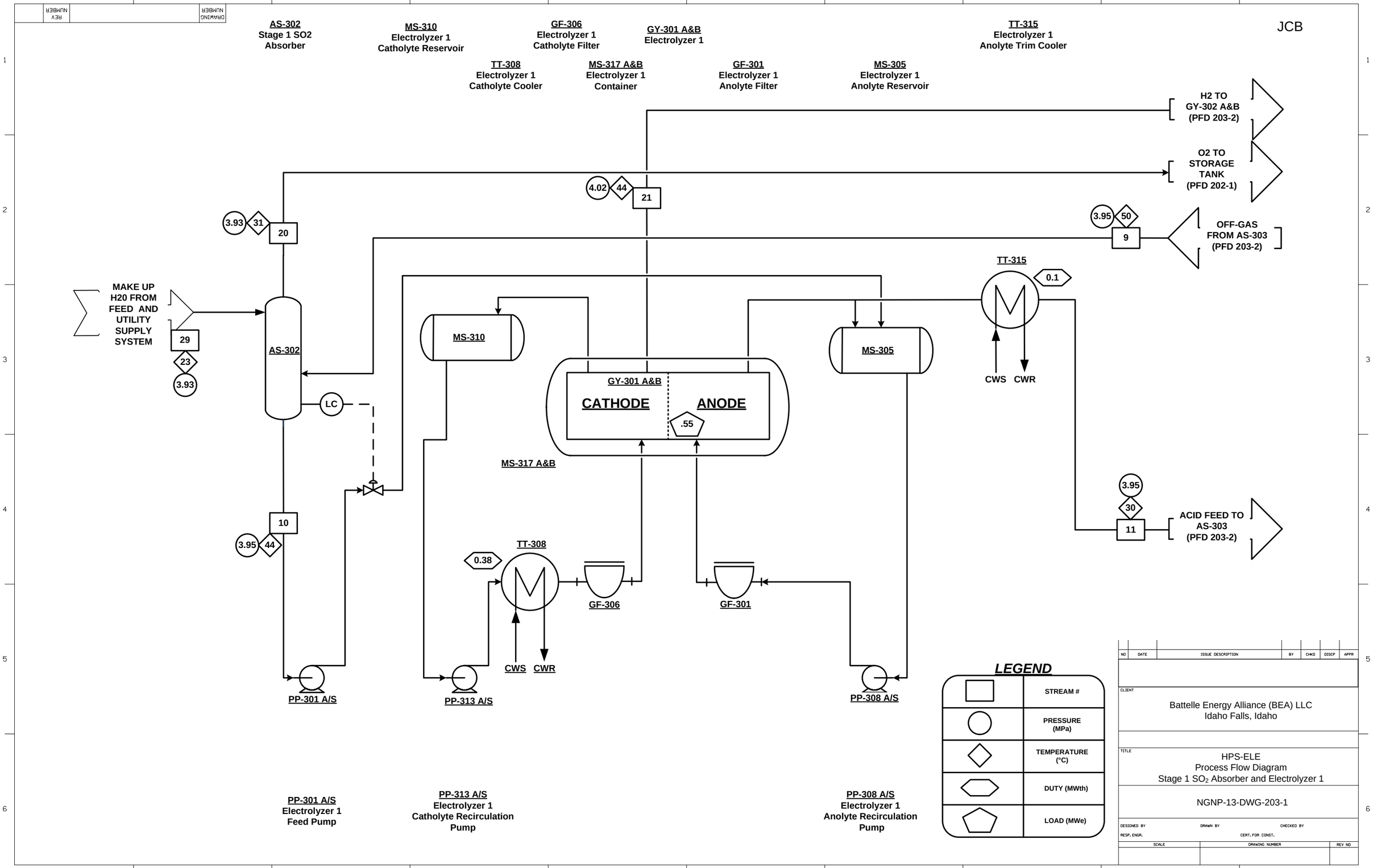
JCB
AS-302
Stage 1 SO2
Absorber
MS-310
Electrolyzer 1
Catholyte Reservoir
GF-306
Electrolyzer 1
Catholyte Filter
GY-301 A&B
Electrolyzer 1
TT-315
Electrolyzer 1
Anolyte Trim Cooler
TT-308
Electrolyzer 1
Catholyte Cooler
MS-317 A&B
Electrolyzer 1
Container
GF-301
Electrolyzer 1
Anolyte Filter
MS-305
Electrolyzer 1
Anolyte Reservoir
H2 TO
GY-302 A&B
(PFD 203-2)
O2 TO
STORAGE
TANK
(PFD 202-1)
OFF-GAS
FROM AS-303
(PFD 203-2)
ACID FEED TO
AS-303
(PFD 203-2)
MAKE UP
H20 FROM
FEED AND
UTILITY
SUPPLY
SYSTEM
4.02
44
21
3.93
31
20
3.95
50
9
29
23
3.93
LC
10
3.95
44
0.1
0.38
.55
3.95
30
11
CATHODE
ANODE
CWS
CWR
PP-301 A/S
PP-313 A/S
PP-308 A/S
LEGEND
STREAM #
PRESSURE
(MPa)
TEMPERATURE
(°C)
DUTY (MWth)
LOAD (MWe)
PP-301 A/S
Electrolyzer 1
Feed Pump
PP-313 A/S
Electrolyzer 1
Catholyte Recirculation
Pump
PP-308 A/S
Electrolyzer 1
Anolyte Recirculation
Pump
NO
DATE
ISSUE DESCRIPTION
BY
CHKD
DISCP
APPR
CLIENT
Battelle Energy Alliance (BEA) LLC
Idaho Falls, Idaho
TITLE
HPS-ELE
Process Flow Diagram
Stage 1 SO2 Absorber and Electrolyzer 1
NGNP-13-DWG-203-1
DESIGNED BY
DRAWN BY
CHECKED BY
RESP. ENGR.
CERT. FOR CONST.
SCALE
DRAWING NUMBER
REV NO

JCB

AS-303
Stage 2 SO2
Absorber

MS-311
Electrolyzer 2
Catholyte Reservoir

TT-309
Electrolyzer 2
Catholyte Cooler

GF-307
Electrolyzer 2
Catholyte Filter

GY-302 A&B
Electrolyzer 2

MS-318 A&B
Electrolyzer 2
Container

GF-302
Electrolyzer 2
Anolyte Filter

MS-306
Electrolyzer 2
Anolyte Reservoir

TT-316
Electrolyzer 2
Anolyte Trim Cooler

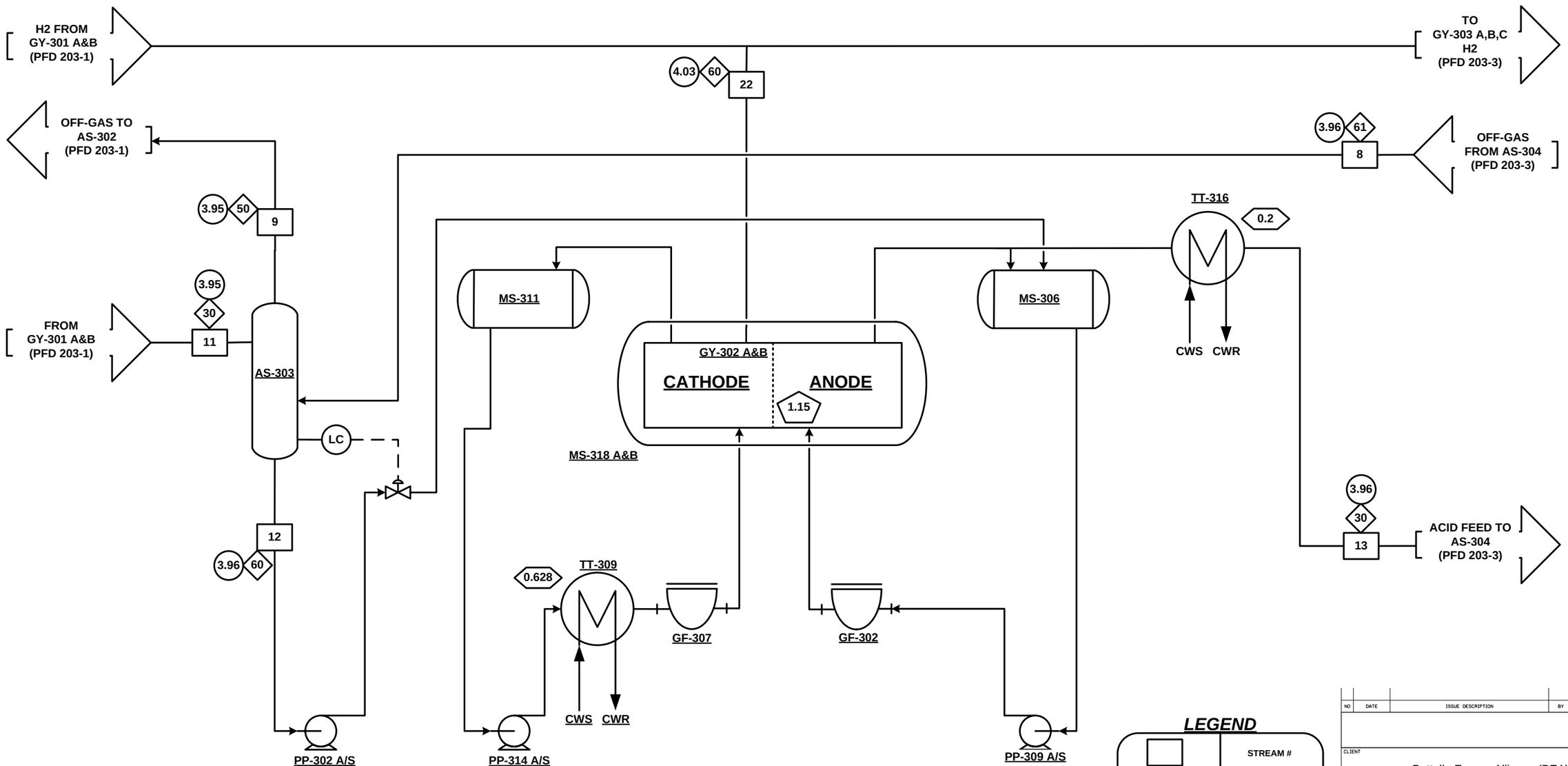

PP-302 A/S
Electrolyzer 2
Feed Pump

PP-314 A/S
Electrolyzer 2
Catholyte Recirculation
Pump

PP-309 A/S
Electrolyzer 2
Anolyte Recirculation
Pump

LEGEND

□	STREAM #
○	PRESSURE (MPa)
◇	TEMPERATURE (°C)
⬡	DUTY (MWth)
⬠	LOAD (MWe)

NO	DATE	ISSUE DESCRIPTION	BY	CHKD	DISCP	APPR

CLIENT
Battelle Energy Alliance (BEA) LLC
Idaho Falls, Idaho

TITLE
HPS-ELE
Process Flow Diagram
Stage 2 SO_2 Absorber and Electrolyzer 2

NGNP-13-DWG-203-2

DESIGNED BY | DRAWN BY | CHECKED BY
RESP. ENGR. | CERT. FOR CONST.

SCALE	DRAWING NUMBER	REV NO

JCB

AS-304
Stage 3 SO2
Absorber

MS-312
Electrolyzer 3
Catholyte Reservoir

GF-308
Electrolyzer 3
Catholyte Filter

GY-303 A,B&C
Electrolyzer 3

TT-317
Electrolyzer 3
Anolyte Trim Cooler

TT-310
Electrolyzer 3
Catholyte Cooler

MS-319 A,B&C
Electrolyzer 3
Container

GF-303
Electrolyzer 3
Anolyte Filter

MS-307
Electrolyzer 3
Anolyte Reservoir

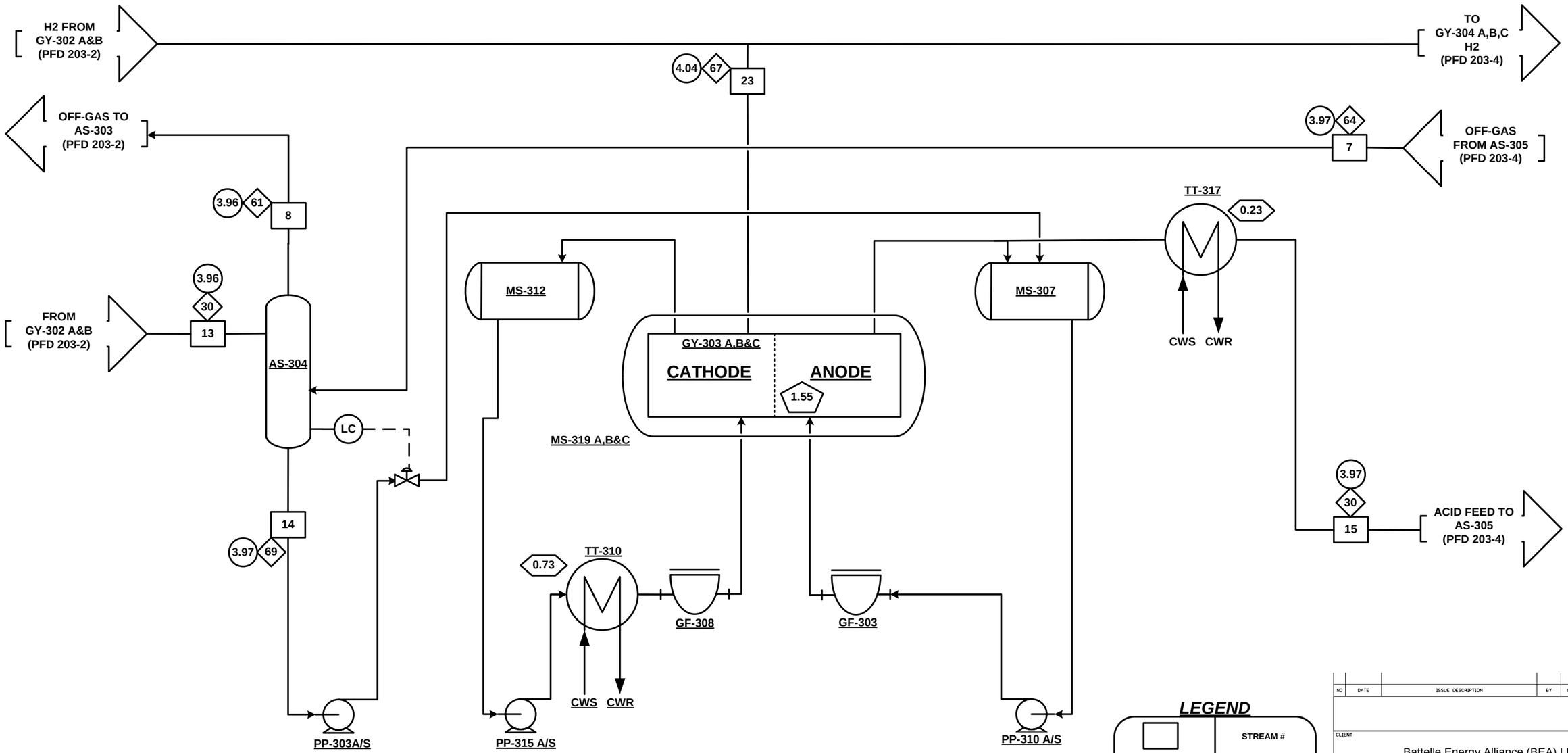

PP-303 A/S
Electrolyzer 3
Feed Pump

PP-315 A/S
Electrolyzer 3
Catholyte Recirculation
Pump

PP-310 A/S
Electrolyzer 3
Anolyte Recirculation
Pump

LEGEND

□	STREAM #
○	PRESSURE (MPa)
◇	TEMPERATURE (°C)
⬡	DUTY (MWth)
⬠	LOAD (MWe)

NO	DATE	ISSUE DESCRIPTION	BY	CHKD	DISCP	APPR

CLIENT
Battelle Energy Alliance (BEA) LLC
Idaho Falls, Idaho

TITLE
HPS-ELE
Process Flow Diagram
Stage 3 SO_2 Absorber and Electrolyzer 3

NGNP-13-DWG-203-3

DESIGNED BY | DRAWN BY | CHECKED BY
RESP. ENGR. | CERT. FOR CONST.

SCALE	DRAWING NUMBER	REV NO

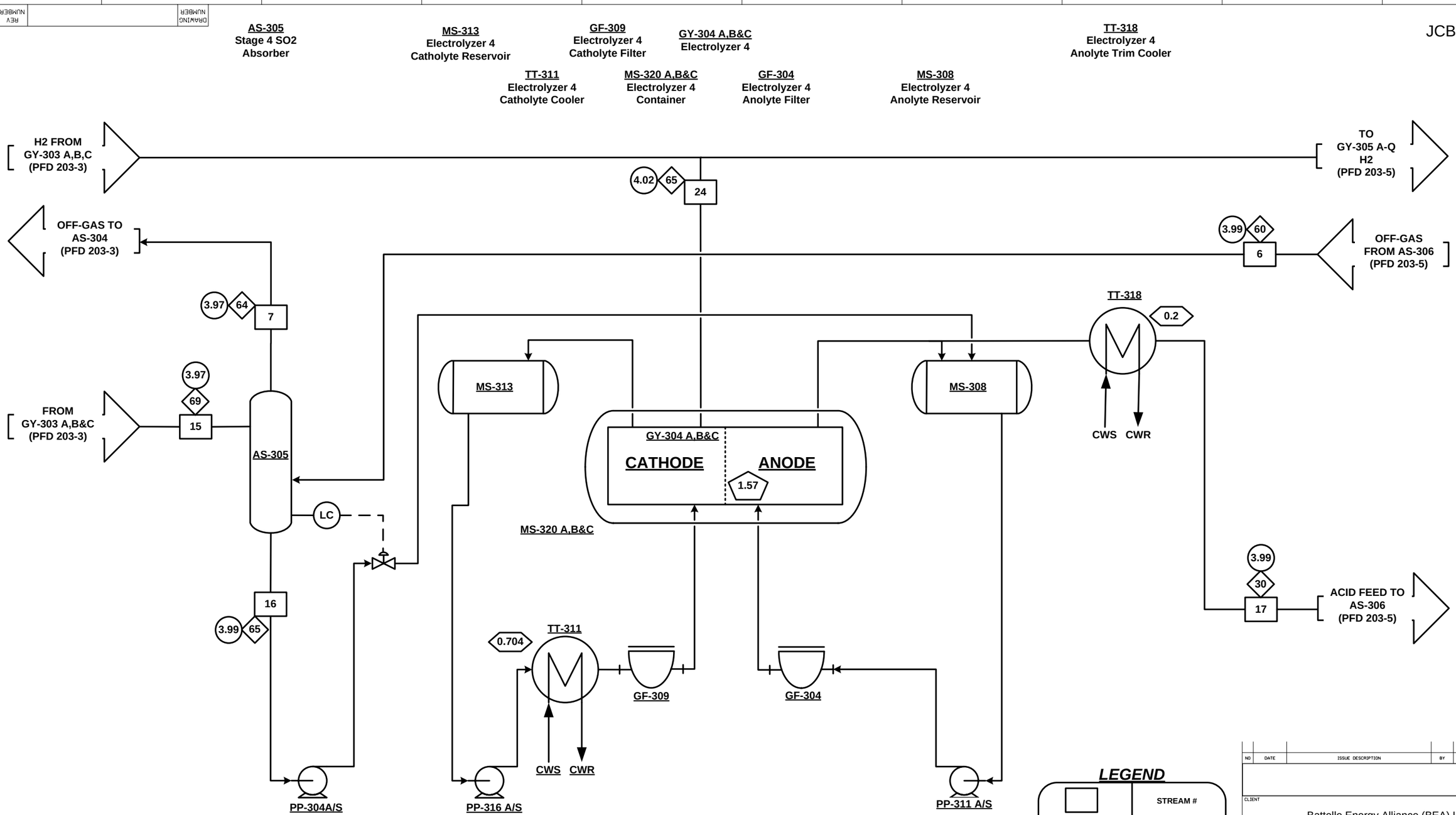

PP-304 A/S
Electrolyzer 4
Feed Pump

PP-316 A/S
Electrolyzer 4
Catholyte Recirculation
Pump

PP-311 A/S
Electrolyzer 4
Anolyte Recirculation
Pump

LEGEND

□	STREAM #
○	PRESSURE (MPa)
◇	TEMPERATURE (°C)
⬡	DUTY (MWth)
⬠	LOAD (MWe)

JCB

NO	DATE	ISSUE DESCRIPTION	BY	CHKD	DISCP	APPR

CLIENT
Battelle Energy Alliance (BEA) LLC
Idaho Falls, Idaho

TITLE
HPS-ELE
Process Flow Diagram
Stage 4 SO_2 Absorber and Electrolyzer 4

NGNP-13-DWG-203-4

DESIGNED BY | DRAWN BY | CHECKED BY
RESP. ENGR. | CERT. FOR CONST.

SCALE	DRAWING NUMBER	REV NO

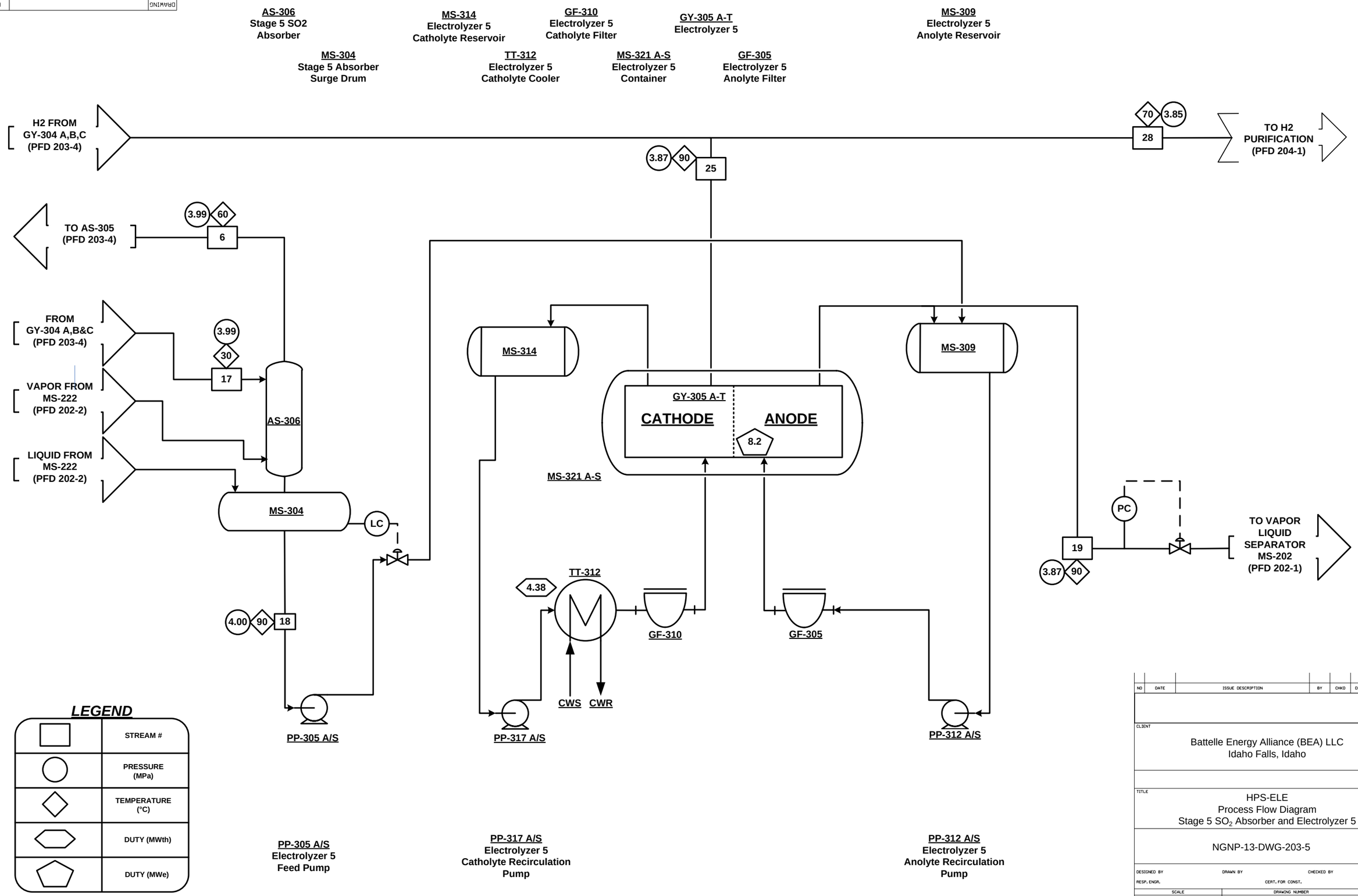

NO	DATE	ISSUE DESCRIPTION	BY	CHKD	DISCP	APPR

CLIENT

Battelle Energy Alliance (BEA) LLC
Idaho Falls, Idaho

TITLE

HPS-ELE
Process Flow Diagram
Stage 5 SO_2 Absorber and Electrolyzer 5

NGNP-13-DWG-203-5

DESIGNED BY | DRAWN BY | CHECKED BY
RESP. ENGR. | CERT. FOR CONST.

SCALE	DRAWING NUMBER	REV NO

Product Purification System Mass Balance: Hydrogen Purification

Stream Name			H2O Adsorb (ADS) Feed				Trace H2O (ADS) Output				H2 Product				Regen Gas			
PFD Stream #			31				32				33				34			
COMPONENTS		MW	Mole Flow	Mass Flow	Mole Frac	Mass Frac	Mole Flow	Mass Flow	Mole Frac	Mass Frac	Mole Flow	Mass Flow	Mole Frac	Mass Frac	Mole Flow	Mass Flow	Mole Frac	Mass Frac
			mol/h	kg/h			mol/h	kg/h			mol/h	kg/h			mol/h	kg/h		
Water	H2O	18	2.92	52.6	0.007	0.055	0.000	0	0.00	0.00	0.000	0	0.00	0.00	0.000	0	0.00	0.00
Hydrogen	H2	2	446.0	901.0	0.993	0.943	445.5	900	1.00	1.00	351.485	710	1.00	1.00	93.564	189	1.00	1.00
Hydrogen Sulfide	H2S	33	0.045	1.500	0.000	0.002	0.000	0	0.00	0.00	0.000	0	0.00	0.00	0.000	0	0.00	0.00
Total			449.0	955.1	1.000	1.000	445.5	900.000	1.00	1.00	351.485	710.000	1.00	1.00	93.564	189.000	1.00	1.00
Temperature	°C		70				32				32				232			
Pressure	MPa		3.85				3.75				3.75				3.75			

Stream Name			Waste Water				Vapor/Liquid Output				Trace H2O (REGEN) Output				Recycle H2/H2O			
PFD Stream #			35				36				37				38			
COMPONENTS		MW	Mole Flow	Mass Flow	Mole Frac	Mass Frac	Mole Flow	Mass Flow	Mole Frac	Mass Frac	Mole Flow	Mass Flow	Mole Frac	Mass Frac	Mole Flow	Mass Flow	Mole Frac	Mass Frac
			mol/h	kg/h			mol/h	kg/h			mol/h	kg/h			mol/h	kg/h		
Water	H2O	18	2.77	50.0	1.00	1.00	0.122	2.2	0.001	0.012	0.133	2.4	0.024	0.179	0.255	4.6	0.003	0.024
Hydrogen	H2	2	0.00	0.0	0.00	0.00	89.1	180	0.999	0.988	5.446	11	0.976	0.821	94.6	191	0.997	0.976
Hydrogen Sulfide	H2S	33	0.00	0.0	0.00	0.00	0.000	0	0.000	0.000	0.000	0	0.000	0.000	0.000	0	0.000	0.000
Total			2.77	50.0	1.00	1.00	89.2	182	1.000	1.000	5.58	13.4	1.000	1.000	94.8	196	1.000	1.000
Temperature	°C		32				32				188				N/A			
Pressure	MPa		3.66				3.59				3.74				N/A			

Product Purification System Mass Balance: Oxygen Purification

Stream Name			Feed From Electrolyzers				Regens From TSA				Feed into SO2 Scrub Column				H2O			
PFD Stream #			27				39				40				41			
COMPONENTS		MW	Mole Flow	Mass Flow	Mole Frac	Mass Frac	Mole Flow	Mass Flow	Mole Frac	Mass Frac	Mole Flow	Mass Flow	Mole Frac	Mass Frac	Mole Flow	Mass Flow	Mole Frac	Mass Frac
			mol/h	kg/h			mol/h	kg/h			mol/h	kg/h			mol/h	kg/h		
Oxygen	O2	32	176	5625	0.970	0.946	23.3	745	0.980	0.987	199	6370	0.97	0.95	0.00	0.00	0.00	0.00
Sulfur Dioxide	SO2	64	4.86	311.2	0.027	0.052	0.018	1.13	0.001	0.002	4.87	312	0.024	0.047	0.00	0.00	0.00	0.00
Water	H2O	18	0.628	11.310	0.003	0.002	0.469	8.45	0.020	0.011	1.165	21	0.006	0.003	182.4	3287	1.00	1.00
Sodium Sulfite	Na2SO3	126	0.000	0.000	0.000	0.000	0.000	0.000	0.000	0.000	0.000	0.00	0.00	0.00	0.00	0.00	0.00	0.00
Sodium Hydroxide	NaOH	40	0.000	0.000	0.000	0.000	0.000	0.000	0.000	0.000	0.000	0.00	0.00	0.00	0.00	0.00	0.00	0.00
Total			181	5947	1.000	1.000	23.8	755	1.000	1.000	205	6703	1.00	1.00	182.4	3287	1.00	1.00
Temperature	°C		35				N/A				35				N/A			
Pressure	MPa		3.9				N/A				3.9				N/A			

Stream Name			NaOH				Na2SO3 Purge				O2 Product				TSA Bed Regen Gas			
PFD Stream #			42				43				44				45			
COMPONENTS		MW	Mole Flow	Mass Flow	Mole Frac	Mass Frac	Mole Flow	Mass Flow	Mole Frac	Mass Frac	Mole Flow	Mass Flow	Mole Frac	Mass Frac	Mole Flow	Mass Flow	Mole Frac	Mass Frac
			mol/h	kg/h			mol/h	kg/h			mol/h	kg/h			mol/h	kg/h		
Oxygen	O2	32	0.00	0.00	0.00	0.00	0.000	0.00	0.00	0.00	175.8	5625	1.00	1.00	23.3	745	1.00	1.00
Sulfur Dioxide	SO2	64	0.00	0.00	0.00	0.00	0.000	0.00	0.00	0.00	0.00	0.00	0.00	0.00	0.0	0.00	0.00	0.00
Water	H2O	18	0.00	0.00	0.00	0.00	0.000	0.00	0.00	0.00	0.00	0.00	0.00	0.00	0.0	0.00	0.00	0.00
Sodium Sulfite	Na2SO3	126	0.00	0.00	0.00	0.00	4.86	612.3	1.00	1.00	0.00	0.00	0.00	0.00	0.0	0.00	0.00	0.00
Sodium Hydroxide	NaOH	40	9.7	388	1.00	1.00	0.000	0.00	0.00	0.00	0.00	0.00	0.00	0.00	0.0	0.00	0.00	0.00
Total			9.7	388	1.00	1.00	4.86	612.3	1.00	1.00	175.8	5625	1.00	1.00	23.3	745	1.00	1.00
Temperature	°C		N/A				N/A				45				45			
Pressure	MPa		N/A				N/A				3.76				3.76			

Stream Name			Diluted NaOH			
PFD Stream #			46			
COMPONENTS		MW	Mole Flow	Mass Flow	Mole Frac	Mass Frac
			mol/h	kg/h		
Oxygen	O2	32	0.00	0.00	0.00	0.00
Sulfur Dioxide	SO2	64	0.00	0.00	0.00	0.00
Water	H2O	18	182.41	3287.00	0.95	0.89
Sodium Sulfite	Na2SO3	126	0.00	0.00	0.00	0.00
Sodium Hydroxide	NaOH	40	9.70	388.00	0.05	0.11
Total			192.11	3675	1.00	1.00
Temperature	°C		N/A			
Pressure	MPa		N/A			

Shaw® Stone & Webster, Inc.

PRODUCT PURIFICATION SYSTEM EQUIPMENT LIST

NGNP

Battelle Energy Alliance (BEA), LLC

Idaho Falls, Idaho

Stone & Webster Project No. 123910

ISSUE	DATE	DESCRIPTION	ORIGR	CHK'R	SDE	PEM	INTERDISCIPLINE REVIEW		
							DISCIPLINE	REV'R	DATE
							Process		
							Mechanical		
							Civil/Structural		
							Control Systems		
							Power Systems		
							Piping		
							Material & Corr.		
0	5/1/07	For PCDR	JCB	COB	COB				

FILE NAME	SHEET	DOC.NO.
App-G NGNP PPU Equipment List 23apr07 .doc	1 of 7	123910-T-EQL-HPS 4-0

EQUIPMENT LIST - TOWERS

Client: Battelle Energy Alliance (BEA), LLC | Signature: JCB

Unit: NGNP | Location: Idaho Falls, Idaho

Item No.	Name	Diameter (mm)	Height (mm)	Packing/ Trays	Mechanical Design		Material		PFD	Remarks
					Press (bar g)	Temp (°C)	Shell C.A. (mm)	Packing Trays		
HPS-PPU AS-401	SO_2 Scrub Tower	600	6000	62.8 ft^3 of 1" IMTP #25 Packing	43	90	304 SS	304 SS	204-2	

Note: Above data (except for Item No. and name) shall not be used for design purposes. For this purpose the data on the relevant specification/data sheets shall be used

EQUIPMENT LIST – VESSELS / REACTORS

Client: Battelle Energy Alliance (BEA), LLC | Signature: JCB

Unit: NGNP | Location: Idaho Falls, Idaho

Item No.	Name	Diameter (mm)	Length (mm)	Horizon/ Vertical	Mechanical Design		Material C.A. (mm)	PFD	Remarks
					Pressure (bar g)	Temperature (°C)			
HPS-PPU MS-401A/B	H_2O Adsorber	1800	5800	V	43	260	304 SS	204-1	
HPS-PPU MR-402	Hydrogenator	1500	1800	V	43	470	304 SS	204-1	
HPS-PPU MS-403 A/B	Desulfurizer Beds	3000	4600	V	43	470	304 SS	204-1	
HPS-PPU MS-404A/B	Trace H_2O Adsorber	600	1800	V	43	60	C.S.	204-1	
HPS-PPU MS-405	Regen Water Knockout Drum	200	1500	V	43	60	C.S.	204-1	
HPS-PPU MS-406A/B	H_2O Adsorber	900	2700	V	43	75	C.S.	204-2	
HPS-PPU MS-407A/B	SO_2 Adsorber	900	2700	V	43	75	C.S.	204-2	

Note: Above data (except for Item No. and name) shall not be used for design purposes. For this purpose the data on the relevant specification/data sheets shall be used

EQUIPMENT LIST – PUMPS

Client: Battelle Energy Alliance (BEA), LLC Signature: JCB

Unit: **NGNP** Location: Idaho Falls, Idaho

Item No.	Name	Type	Rated Flow (m^3 /h)	Differential Pressure bar	Motor kW	Material		PFD	Remarks
						Casing	Impeller		
HPS-PPU PP-401 A/S	NaOH Solution Recycle Pump	Centrif.	21	1	1.5	304 SS	304 SS	204-2	2 hp

Note: Above data (except for Item No. and name) shall not be used for design purposes. For this purpose the data on the relevant specification/data sheets shall be used

EQUIPMENT LIST – COMPRESSORS / BLOWERS / VACUUM PUMPS

Client: Battelle Energy Alliance (BEA), LLC | Signature: JCB

Unit: **NGNP** | Location: Idaho Falls, Idaho

Item No.	Name	Type	Capacity (Am^3/h)	Suction Pressure (bar g)	Differential Pressure (bar)	Driver		Material C.A.(mm)	PFD	Remarks
						Type	Rated Power (kW)			
HPS-PPU PB-401	Recirculation Blower	High Speed	65	36.6	7	Motor	9	C.S.	204-1	
HPS-PPU PB-403	TSA Regen Gas Recirculation Blower	High Speed	20	37.9	3	Motor	1.2	C.S.	204-2	

Note: Above data (except for Item No. and name) shall not be used for design purposes. For this purpose the data on the relevant specification/data sheets shall be used

EQUIPMENT LIST – HEAT EXCHANGERS

Client: Battelle Energy Alliance (BEA), LLC | Signature: JCB

Unit: **NGNP** | Location: Idaho Falls, Idaho

Item No.	Name	Area (m^2)	Mechanical Design		Type	PFD	Remarks
			Shell	Tube			
			Material Pressure (bar g) Temperature (^oC)	Material Pressure (bar g) Temperature (^oC)			
HPS-PPU TT-401	HDS System Heat Economizer	160	1 ¼ Cr, ½ Mo. 43 450	1 ¼ Cr, ½ Mo 43 450	BEM	204-1	$3.7x10^6$ Btu/h 1.1 MW
HPS-PPU TE-402	HDS Feed Heater		1 ¼ Cr, ½ Mo. 43 675	1 ¼ Cr, ½ Mo. 43 675	Electric Heater	204-1	220,000 Btu/h 65 kW
HPS-PPU TT-403	HDS Trim Cooler	32	Carbon Steel 6 50	1 ¼ Cr, ½ Mo. 43 120	BEU	204-1	770,000 Btu/h 2 Shells 226 kW
HPS-PPU TE-404	Trace H_2O Adsorber Regen. Heater		1 ¼ Cr, ½ Mo. 43 400	1 ¼ Cr, ½ Mo. 43 400	Electric Heater	204-1	26,600 Btu/h 8 kW
HPS-PPU TE-405	H_2O Adsorber Regen. Heater		1 ¼ Cr, ½ Mo. 43 400	1 ¼ Cr, ½ Mo. 43 400	Electric Heater	204-1	503,000 Btu/h 150 kW
HPS-PPU TT-406	H_2O Adsorber Regen. Cooler	23	Carbon Steel 6 50	1 ¼ Cr, ½ Mo. 43 260	BEU	204-1	540,000 Btu/h 2 Shells 160 kW

Note: Above data (except for Item No. and name) shall not be used for design purposes. For this purpose the data on the relevant specification/data sheets shall be used

EQUIPMENT LIST – HEAT EXCHANGERS

Client: Battelle Energy Alliance (BEA), LLC | Signature: JCB

Unit: **NGNP** | Location: Idaho Falls, Idaho

Item No.	Name	Area (m^2)	Mechanical Design		Type	PFD	Remarks
			Shell	Tube			
			Material Pressure (bar g) Temperature (^oC)	Material Pressure (bar g) Temperature (^oC)			
HPS-PPU TT-407	Trace H_2O Adsorber Regen Cooler	0.1	Carbon Steel 6 50	Carbon Steel 40 150	BEU	204-1	6,750 Btu/h 2 kW
HPS-PPU TT-409	SO_2 Adsorber Regen Heater	0.53	Carbon Steel 40 200	Cu or Brass 40 150	DEU	204-2	27,300 Btu/h 8 kW
HPS-PPU TT-410	H_2O Absorber Regen Heater	1.2	Carbon Steel 40 200	Cu or Brass 40 150	DEU	204-2	61,000 Btu/h 18 kW
HPS-PPU TT-411	SO_2 Absorber Regen Cooler	0.12	Carbon Steel 6 50	Cu or Brass 40 150	BEU	204-2	9,300 Btu/h 3 kW
HPS-PPU TT-412	H_2O Absorber Regen Cooler	0.25	Carbon Steel 6 50	Cu or Brass 40 150	BEU	204-2	21,300 Btu/h 6 kW

Note: Above data (except for Item No. and name) shall not be used for design purposes. For this purpose the data on the relevant specification/data sheets shall be used

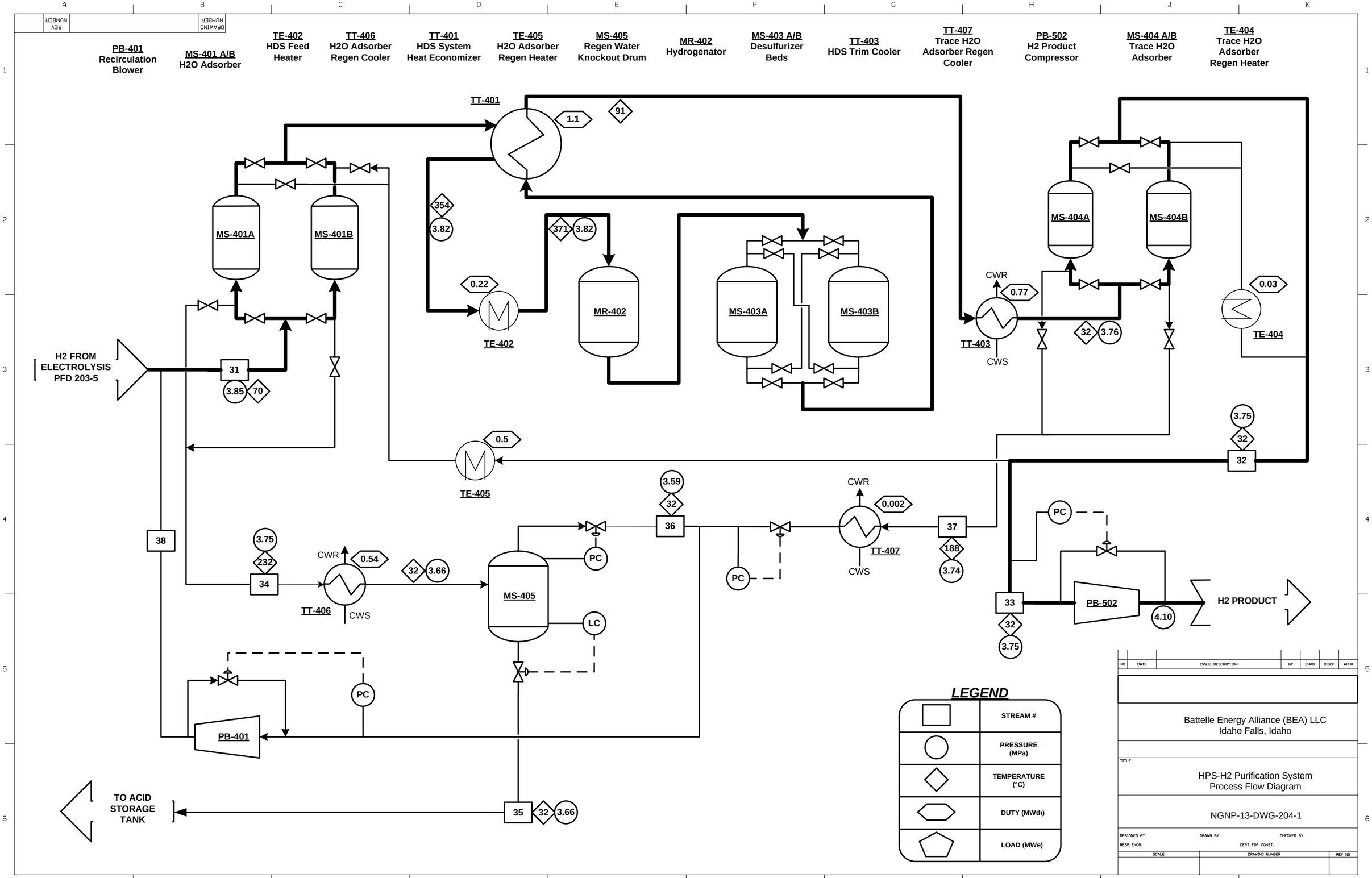
PB-401 Recirculation Blower
MS-401 A/B H2O Adsorber
TE-402 HDS Feed Heater
TT-406 H2O Adsorber Regen Cooler
TT-401 HDS System Heat Economizer
TE-405 H2O Adsorber Regen Heater
MS-405 Regen Water Knockout Drum
MR-402 Hydrogenator
MS-403 A/B Desulfurizer Beds
TT-403 HDS Trim Cooler
TT-407 Trace H2O Adsorber Regen Cooler
PB-502 H2 Product Compressor
MS-404 A/B Trace H2O Adsorber
TE-404 Trace H2O Adsorber Regen Heater
TT-401
1.1
91
354
3.82
371
3.82
0.22
TE-402
MR-402
MS-403A
MS-403B
MS-401A
MS-401B
MS-404A
MS-404B
CWR
0.77
TT-403
CWS
32
3.76
0.03
TE-404
H2 FROM ELECTROLYSIS PFD 203-5
31
3.85
70
0.5
TE-405
3.75
32
32
3.59
32
36
CWR
0.002
TT-407
CWS
37
188
3.74
38
3.75
232
34
CWR
0.54
TT-406
CWS
32
3.66
MS-405
PC
LC
PC
PC
PC
33
32
3.75
PB-502
4.10
H2 PRODUCT
PB-401
TO ACID STORAGE TANK
35
32
3.66
LEGEND
STREAM #
PRESSURE (MPa)
TEMPERATURE (°C)
DUTY (MWth)
LOAD (MWe)
NO
DATE
ISSUE DESCRIPTION
BY
CHKD
DISCP
APPR
Battelle Energy Alliance (BEA) LLC
Idaho Falls, Idaho
TITLE
HPS-H2 Purification System
Process Flow Diagram
NGNP-13-DWG-204-1
DESIGNED BY
DRAWN BY
CHECKED BY
RESP. ENGR.
CERT. FOR CONST.
SCALE
DRAWING NUMBER
REV NO

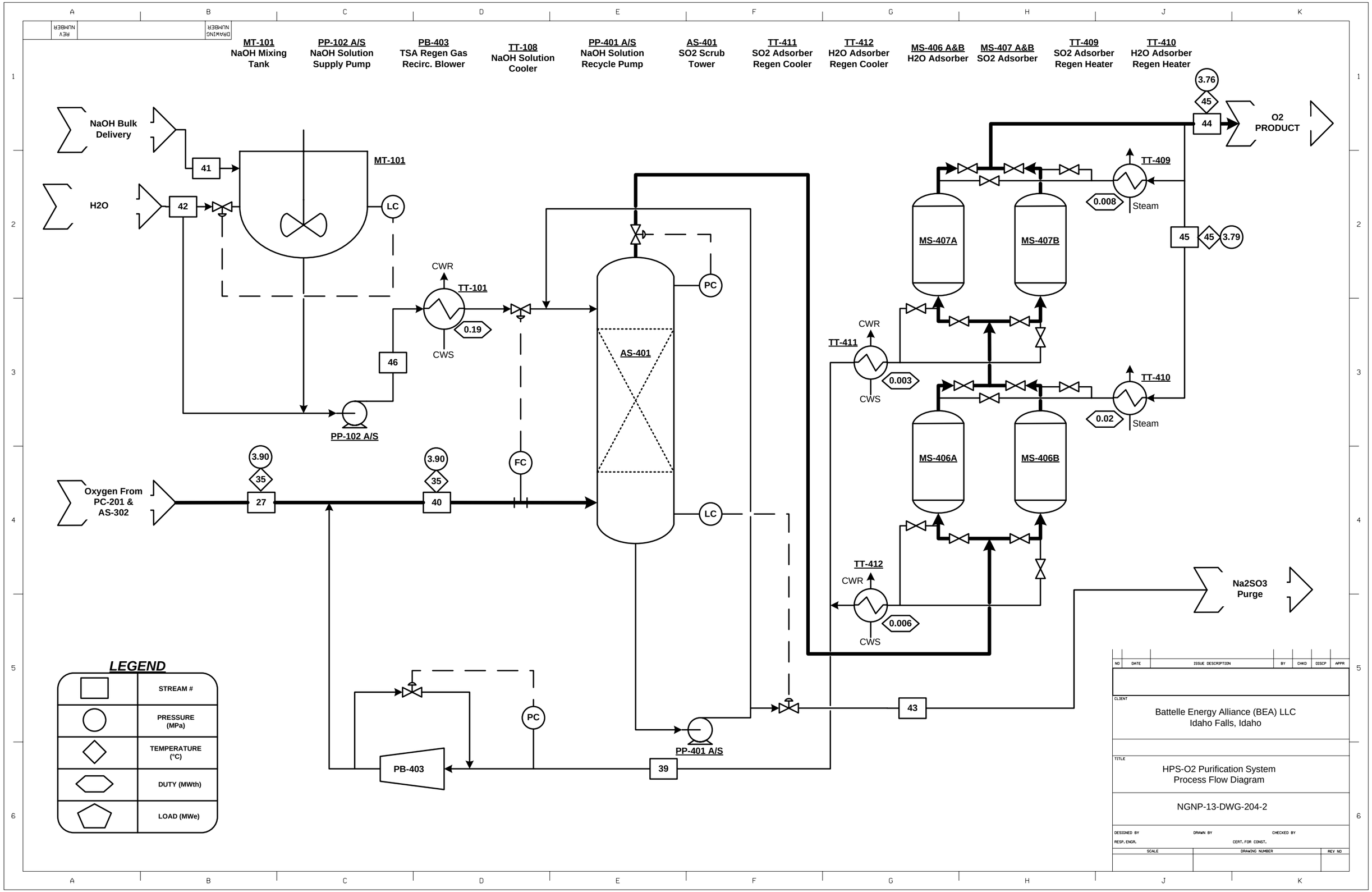
MT-101 NaOH Mixing Tank
PP-102 A/S NaOH Solution Supply Pump
PB-403 TSA Regen Gas Recirc. Blower
TT-108 NaOH Solution Cooler
PP-401 A/S NaOH Solution Recycle Pump
AS-401 SO2 Scrub Tower
TT-411 SO2 Adsorber Regen Cooler
TT-412 H2O Adsorber Regen Cooler
MS-406 A&B H2O Adsorber
MS-407 A&B SO2 Adsorber
TT-409 SO2 Adsorber Regen Heater
TT-410 H2O Adsorber Regen Heater
NaOH Bulk Delivery
H2O
41
42
MT-101
LC
CWR
TT-101
0.19
CWS
46
PP-102 A/S
3.90
35
27
Oxygen From PC-201 & AS-302
FC
40
PC
AS-401
LC
PP-401 A/S
39
PB-403
PC
43
Na2SO3 Purge
TT-411
0.003
TT-412
0.006
MS-406A
MS-406B
MS-407A
MS-407B
TT-409
0.008
Steam
TT-410
0.02
Steam
3.76
45
44
O2 PRODUCT
3.79
LEGEND
STREAM #
PRESSURE (MPa)
TEMPERATURE (°C)
DUTY (MWth)
LOAD (MWe)
NO
DATE
ISSUE DESCRIPTION
BY
CHKD
DISCP
APPR
CLIENT
Battelle Energy Alliance (BEA) LLC
Idaho Falls, Idaho
TITLE
HPS-O2 Purification System
Process Flow Diagram
NGNP-13-DWG-204-2
DESIGNED BY
DRAWN BY
CHECKED BY
RESP. ENGR.
CERT. FOR CONST.
SCALE
DRAWING NUMBER
REV NO

Shaw® Stone & Webster, Inc.

PRODUCT STORAGE AND DELIVERY SYSTEM EQUIPMENT LIST

NGNP

Battelle Energy Alliance (BEA), LLC

Idaho Falls, Idaho

Stone & Webster Project No. 123910

ISSUE	DATE	DESCRIPTION	ORIGR	CHK'R	SDE	PEM	INTERDISCIPLINE REVIEW		
							DISCIPLINE	REV'R	DATE
							Process		
							Mechanical		
							Civil/Structural		
							Control Systems		
							Power Systems		
							Piping		
							Material & Corr.		
0	05/21/07	For PCDR	JCB	COB	COB				

FILE NAME	SHEET	DOC.NO.
NGNP HPS PUR Equipment List .doc	1 of 2	123910-T-EQL-HPS 5-0

EQUIPMENT LIST – COMPRESSORS / BLOWERS / VACUUM PUMPS

Client: Battelle Energy Alliance (BEA), LLC Signature: JCB

Unit: **NGNP** Location: Idaho Falls, Idaho

Item No.	Name	Type	Capacity (Am^3/h)	Suction Pressure (bar g)	Differential Pressure (bar)	Driver		Material C.A.(mm)	PFD	Remarks
						Type	Rated Power (kW)			
HPS-PSD PB-502	H_2 Product Blower	High Speed	230	38.5	2	Motor	95	C.S.	204-1	

Note: Above data (except for Item No. and name) shall not be used for design purposes. For this purpose the data on the relevant specification/data sheets shall be used

Shaw® Stone & Webster, Inc.

WASTE TREATMENT AND DISPOSAL SYSTEM EQUIPMENT LIST

NGNP

Battelle Energy Alliance (BEA), LLC

Idaho Falls, Idaho

Stone & Webster Project No. 123910

ISSUE	DATE	DESCRIPTION	ORIGR	CHK'R	SDE	PEM
0	05/21/07	For PCDR	JCB	COB	COB	

INTERDISCIPLINE REVIEW		
DISCIPLINE	REV'R	DATE
Process		
Mechanical		
Civil/Structural		
Control Systems		
Power Systems		
Piping		
Material & Corr.		

FILE NAME	SHEET	DOC.NO.
NGNP HPS PUR Equipment List .doc	1 of 2	123910-T-EQL-HPS 6-0

EQUIPMENT LIST – MISCELLANEOUS

Client: Battelle Energy Alliance (BEA), LLC | Signature: JCB

Unit: **NGNP** | Location: Idaho Falls, Idaho

Item No.	Name	Material	PFD	Duty - Description - Remarks
HPS-WTD GZ-601	Waste Water Sump			Floor Sump to hold 20,000 gal. with 2 200 gpm pumps, 50 psi $200,000 (APCI)
HPS-WTD GZ-602	Waste Neutralization System			Field erected tank + Skid $300,000 10m x 10m Foundation Required

Note: Above data (except for Item No. and name) shall not be used for design purposes. For this purpose the data on the relevant specification/data sheets shall be used

NGNP-08-RPT-001 May 2007
Revision 0

NGNP and Hydrogen Production Preconceptual Design Report

SECTION 8: POWER CONVERSION SYSTEM

Revision 0

APPROVALS

Function	Printed Name and Signature	Date
Author	Peter D. Wells, P.E. Shaw , Environmental and Infrastructure, Inc.	May 24,2007
Reviewer	Richard Gauthier, P.E. Shaw, Environmental and Infrastructure, Inc.	May 24,2007
Approval	Edward Brabazon Shaw, Environmental and Infrastructure, Inc.	May 24,2007

Westinghouse Electric Company LLC
Nuclear Power Plants
Post Office Box 355
Pittsburgh, PA 15230-0355

©2007 Westinghouse Electric Company LLC
All Rights Reserved

LIST OF CONTRIBUTORS

Name and Organization	Date
Frank Senkel Shaw Stone and Webster, Inc.	May 2007
Alan Spring Westinghouse Electric Corporation	May 2007

BACKGROUND INTELLECTUAL PROPERTY

Section	Title	Description
NONE		NONE

REVISION HISTORY

RECORD OF CHANGES

Revision No.	Revision Made by	Description	Date
0	Frank Senkel Shaw Stone & Webster	Initial Issue	May 24, 2007

DOCUMENT TRACEABILITY

Created to support the following Document(s)	Document Number	Revision
NGNP and Hydrogen Production Preconceptual Design Report	NGNP-01-RPT-001	0

TABLE OF CONTENTS

LIST OF TABLES **8-5**
LIST OF FIGURES **8-6**
8 POWER CONVERSION SYSTEM **8-7**
SUMMARY AND CONCLUSIONS **8-7**
INTRODUCTION **8-9**
8.1 GENERAL RANKINE CYCLE OVERVIEW **8-10**
8.2 SYSTEMS **8-11**
8.2.1 System Functions and Requirements **8-11**
8.2.2 System Description **8-22**
8.2.3 Major System Interfaces **8-33**
8.2.4 System Operation **8-35**
8.3 DESIGN DEVELOPMENT NEEDS **8-39**
8.3.1 Functions **8-39**
8.3.2 Key Requirements **8-39**
8.3.3 Design Data Needs **8-39**
8.4 COMPLEXITY, RISK, AND FUTURE STUDIES **8-82**
8.4.1 Complexity and Risks **8-82**
8.4.2 Future Studies **8-82**
8.5 REFERENCES **8-83**
LIST OF ASSUMPTIONS **8-84**
APPENDICES **8-85**
Appendix 8A Technical Information **8-85**
Appendix 8B Final Design Review Presentation to BEA **8-85**

LIST OF TABLES

Table 8-1: Main Steam/Extraction Steam Piping 8-22
Table 8-2: Steam Generator (PCS-SG-001) 8-23
Table 8-3: Steam Turbine (PCS-ST-001) 8-26
Table 8-4: Condensate/Feedwater Piping 8-26
Table 8-5: Air Cooled Condenser (PCS-ACC-001) 8-27
Table 8-6: Condensate Pumps (PCS-P-001A/B) 8-27
Table 8-7: Condensate Polishing 8-28
Table 8-8: Feedwater Heater (PCS-FWH-001) 8-29
Table 8-9: Feedwater Heater (PCS-FWH-002) 8-29
Table 8-10: Feedwater Heater (PCS-FWH-003) 8-29
Table 8-11: Feedwater Heater (PCS-FWH-004) 8-30
Table 8-12: Feedwater Pumps (PCS-P-002A/B) 8-30
Table 8-13: Heater Drains 8-31
Table 8-14: Chemical Addition System 8-31
Table 8-15: Main Steam/Extraction Steam System Interfaces 8-33
Table 8-16: Condensate/Feedwater System Interfaces 8-33
Table 8-17: NGNP/Commercial Electric Power Energy Balance with HPS Operating 8-36
Table 8-18: Commercial Part Load Electric Power Energy Balance with HPS Operating 8-37
Table 8-19: Electric Power Energy Balance without HPS Operating 8-38
Table 8-20: Steam Generator Design Data Needs 8-40
Table 8-21: Heat Balance Assumptions 8-84

LIST OF FIGURES

Figure 8-1: Demonstration Facility Heat Balance – No HPS in Operation 8-15
Figure 8-2: Demonstration Facility Heat Balance – HPS in Operation 8-16
Figure 8-3: Demonstration Facility Heat Balance – Reheat Cycle 8-17
Figure 8-4: Commercial Facility Heat Balance – Non-Reheat Cycle 8-18
Figure 8-5: Commercial Facility Heat Balance – 3 Reactors 8-19
Figure 8-6: Commercial Facility Heat Balance – 2 Reactors 8-20
Figure 8-7: Commercial Facility Heat Balance – 1 Reactors 8-21
Figure 8-8: Helical Steam Generator 8-24

8 POWER CONVERSION SYSTEM

SUMMARY AND CONCLUSIONS

This chapter describes the pre-conceptual design of the Power Conversation System (PCS). The results from Special Study 20.4 Power Conversion System [8-3] and Special Study 20.3 High Temperature Process Heat Transfer and Transport [8-2] are used as a starting point for development of this section of the Pre-conceptual Design report (PCDR). As a result of the aforementioned special studies, a conventional Rankine power cycle was selected. The use of a conventional Rankine cycle provides a flexible, well proven, highly reliable system with the potential for process integration and use of waste heat from the Hydrogen Production System (HPS). Additionally, with the exception of the Steam Generator (SG), the major equipment is readily available from a multitude of vendors. R&D requirements and cost uncertainty are limited to the SG.

Additional studies, including multiple heat balance cases are conducted to identify features of the power conversion that influence cost effectiveness in the systems. Cases with and without helium to steam reheat are evaluated. This system interfaces with the Secondary Heat Transport System (SHTS) at the SG located in the SG building. The SG components are considered part of the PCS.

Key features are:

- The system is designed using commercially available components, to minimize R&D and technology development needs.
- High temperature helium piping is minimized to limit leakage and system heat losses.
- The system has capability to interact and accommodate operational transients associated with the with the Hydrogen Production Unit Facility
- INL is a dry site so air cooled condensing is selected.
- Physical size limitations of SG components must be based on transportation limits. This may influence selection of multiple trains.
- The system must be adaptable to commercial sized application of Hydrogen/Power cogeneration.

Design requirements and performance parameters for major equipment are identified:

- Steam generator
- Steam Turbine Generator
- Feed-water Heaters
- Air Cooled Condenser

- Condensate and Feed-water pumps
- Deaerator
- Support systems

The Steam Generator has been identified as a developmental component based on prior design development experience for other High Temperature Gas Reactors (HTGR) applications. The requirements, configuration, materials and design features of this component require that a number of Design Data Needs (DDNs) be satisfied for successful design, manufacturing, delivery and long term operation of the prototype and follow-on components. Eighteen items of need are identified for the Steam Generator.

It is recommended that studies be conducted in the subsequent conceptual design phase to optimize selection of components influencing cost effectiveness of the PCS.

Steam Generator Design Trade Study

It is recommended that a future study be conducted that will evaluate alternative approaches for the steam generator including more conventional designs (e.g. refractory lined, U tube) compared to the once through helical type SG proposed in the preconceptual design. Single vs. multiple trains will be evaluated. The results of the study will establish a path forward for design development of the steam generator.

Rankine Cycle Trade Study

Further engineering studies are recommended to optimize Rankine Cycle configuration and performance in conceptual design. The study will assess costs and performance benefits of more efficient cycles with steam reheat vs. more simple but less costly systems. The study will proceed in conjunction with the steam generator design trade study discussed above.

Design Basis Transient Study

An engineering study is recommended to identify and analyze transient cases that could effect the design requirements of the PCS with respect to ensuring safety of the Nuclear Heat Supply System (NHSS) and Heat Transport System (HTS). Demonstration cases and commercial configurations will be assessed to ensure that the NHSS, HTS, and HPS function within the design basis envelopes through the assumed transient conditions.

INTRODUCTION

The Power Conversion System for the Pebble Bed Modular Reactor (PBMR) Next Generation Nuclear Plant (NGNP) prototype is a conventional non-reheat Rankine water vapor cycle with regenerative feedwater heating. It provides electric power to meet plant internal loads, with the surplus power to be exported for commercial sale. The energy input to the system is via heat exchange with the Nuclear Heat Supply System (NHSS) through the Primary Heat Transport System (PHTS) and then the Secondary Heat Transport System (SHTS) helium loop. A non-reheat cycle was chosen over a presumably more thermally efficient a reheat cycle due to both the anticipated cost of a reheater, and the economics typical of a demonstration facility. Conventional reheat cycles could also be used, as they provide higher efficiency, but are more complicated, and more capital intensive. Reheat vs. non-reheat cycle selection for the commercial facility, cycle parameters, and equipment selections can be finalized based on a cost/benefit analysis as part of the conceptual design effort to be performed at a later date. All acronyms are defined in Appendix A of the PCDR.

The PCS for the demonstration unit is sized for full NHSS thermal power. This allows for additional power export during periods when the HPS is not in operation. In the demonstration unit, the PCS is completely independent from the HPS.

In the commercial facility, it is anticipated that cycle efficiency can be improved by recovering waste heat from the HPS effluent streams.

8.1 GENERAL RANKINE CYCLE OVERVIEW

The PBMR NGNP PCS is based on a regenerative Rankine cycle with conventional steam turbine-generator and an air cooled condenser. The Rankine cycle is a liquid-vapor cycle where a SG produces superheated steam at high pressure. The steam is expanded through a Steam Turbine (ST) to produce mechanical work used to power an electric generator. During the expansion through the turbine, a portion of the steam is extracted at several pressure levels and is used to preheat boiler feedwater. This regenerative feedwater heating improves the overall cycle efficiency by increasing the average temperature at which heat is added in the boiler. Once the steam is expanded through the turbine it is exhausted, at sub-atmospheric pressure, to an Air Cooled Condenser (ACC). The condenser cools the expanded steam to a saturated liquid by exchanging heat with the ambient air. Condensate pumps force the liquid through several low pressure closed regenerative feedwater heaters, and finally to an open feedwater heater known as a deaerator. In the deaerator, feedwater is cascaded over trays, with extraction steam flowing counter current to the feedwater. This arrangement has the effect of removing oxygen and other dissolved gases from the feedwater, the non-condensable gases are then vented from the cycle. High pressure feedwater pumps force the deaerated feedwater through one or more high pressure closed regenerative feedwater heaters. The high pressure heated feedwater then flows to a SG where it is evaporated and superheated by heat exchange with the circulating high temperature helium in the SHTS loop.

8.2 SYSTEMS

8.2.1 System Functions and Requirements

PCS Facility Top Level Requirements

The following requirements for the PBMR NGNP are taken from [8-11].

- PCS Parameters and Performance
  - In full electricity generation mode, the PCS receives process helium from the NHSS at about 900°C and utilizes the rated capacity of the NHSS in the generation of electricity via a Rankine cycle.
  - In rated hydrogen production (cogeneration) mode, the PCS receives process helium from the HPS at about [700]°C and utilizes up to about 450 MWt in the generation of electricity via a Rankine cycle.
  - The PCS cycle efficiency is about [36]%.

- PCS Configuration
  - The PCS facility is separated from the NHSS in a manner consistent with commercial plant economic and risk tradeoffs.
  - A steam generator receives process helium, and supplies steam to a conventional turbine-generator-condenser system that is decoupled from the HPS.

- PCS Reliability & Availability
  - Capacity Factor
  - Excluding NGNP mission-specific outages for inspection and testing, the PCS design capacity factor for electricity generation averaged over the plant lifetime is at least [TBD] % when modeled with equipment mean time to failure and mean time to repair data for the same or similar systems and/or components.

  - Planned Outages
  - Excluding NGNP mission-specific outages for inspection and testing, the capacity factor loss due to PCS planned outages averaged over the lifetime of the plant does not exceed [TBD] %, including all planned inspection and maintenance activities that must be accomplished with the PCS shut down.

  - PCS Investment Protection
  - Excluding NGNP mission-specific outages for inspection and testing, the calculated capacity factor loss due to unplanned PCS outages averaged over the lifetime of the plant does not exceed [TBD] %.

- PCS Maintenance & In-Service Inspection
  - PCS Maintenance Requirements

    The PCS is designed to allow all components to be removed and reinstalled to make possible inspection, repair and replacement.

    The PCS design includes provisions for monitoring equipment status, configuration, and performance and for detecting and diagnosing malfunctions as a basis for predictive maintenance plans and decision making.

  - PCS In-Service Inspection
    The PCS design provides access to permit in-service inspection as required by appropriate sections of the ASME B&PV Code.

PCS Functions

The PCS function is to convert NHSS produced heat into electricity for export to the electric grid and for NGNP house loads. The PCS is required to utilize all of the heat produced by the NHSS when the HPS is not operating. The PCS removes the heat and produces electricity by using a conventional Steam Turbine (ST) -Generator and an Air Cooled Condenser (ACC). The PCS is sized for the full thermal load of the NHSS system, approximately 526 MWt, an SHTS helium supply temperature of 900°C, and a helium return temperature to the Intermediate Heat Exchanger (IHX) no less than 280°C [8-6]. The PCS design is based on conventional technology typical of existing commercial power facilities of a similar size. The PCS incorporates design aspects to the extent necessary to prevent upset and transient events occurring within the PCS from adversely affecting the NHSS system or equipment. The PCS incorporates design aspects to the extent necessary in order to mitigate upset and transient events occurring in the NHSS system from adversely affecting the Reactor coolant loop and IHX heat exchanger. The PCS is not a nuclear safety related system and is therefore governed by the American Society of Mechanical Engineers (ASME) Section VIII [8-7] and American National Standards Institute (ANSI) B31.1 [8-8] codes.

PCS and HPS Integration

The demonstration facility is designed to allow the PCS to operate completely independent from the HPS. This design allows flexibility in operation, and efficient power generation during periods when the HPS is not in operation. In the commercial plant design, the PCS and HPS are integrated for more efficient operation. Utilizing waste heat from the HPS Decomposition Reactor effluent for feedwater heating retains the increased power cycle efficiency of heat input at higher temperatures, and allows what would have been extraction steam to be expanded through the turbine to produce additional useful work. Integration of the HPS and PCS is the subject of a cost benefit analysis to be performed as part of the conceptual design effort.

Pressures, Temperatures, Working Fluids

Several heat balance diagrams for the demonstration plant are provided. Conditions for interface with the SHTS at the SG are based on the reference design taken from Figure 3.1-5, and 3.1-6 in [8-6]. Figure 8-1 and Figure 8-2 depict a typical non-reheat cycle with the HPS in operation and out of operation, respectively. Figure 8-3 depicts a typical reheat cycle.

Heat Balance Diagrams for the commercial facility are also included in Figure 8-4, Figure 8-5, Figure 8-6, and Figure 8-7 and depict a full sized commercial non-reheat cycle, with regenerative feedwater heating using HPS waste heat, 4 reactors, 4 SGs, one Steam Turbine, and one ACC for the configuration. The turbine is sized at 600 MWe to accommodate available thermal power from the 4 reactors allowing for operation of the full scale operation HPS. These figures provide heat balance data for operation of the commercial scale plant for input to the Economic assessments discussed in Section 19.

This arrangement conforms with a slide-along concept for plant expansion, using additional PCS primary components. Note that economy of scale is realized by increasing the size of the PCS turbine and ACC to handle four reactor trains (4x1). However the final configuration, including the number of steam turbines, the cycle selection (reheat vs. non-reheat), and HPS integration for the commercial facility are subject to a cost benefit analysis to be performed later, as noted above.

Heat Balance Diagrams were prepared using Thermoflex software, developed by Thermoflow, Inc. [8-5]

Steam Turbine Generator

The ST is designed to operate at steady-state conditions at part load between 100% and 25% throttle flow. The Steam Turbine is designed to withstand the mechanical and thermal loads resulting from operating and design transients.

Air Cooled Condenser

The ACC is designed to operate at steady-state conditions at loads between 100% and 25% turbine exhaust flow. Additionally, the ACC is designed for full steam bypass operation. The desuperheated steam turbine bypass is piped to a point in the ACC inlet duct. The ACC is designed to withstand and accommodate the mechanical and thermal loads resulting from design transients, eliminating the need for rapid reactor load changes in response to a sudden turbine load rejection or trip.

PCS Control System

The control system for the PCS provides control, automation control logic, information/alarm display and recording functions for the PCS sections of the PBMR. The system provides automatic control functions and contains the ability for operator overrides where necessary to prevent unnecessary unit shutdowns. The control system also provides information/alarm display and recording functions for the PCS.

A control station (located within the Main Control Room), containing a Wide Screen Display Panel, dedicated Engineering and Operator Work Stations, and any required auxiliary control and display consoles are provided to control the PCS and all necessary support systems. Automatic and manual control functions are implemented through the use of graphical user interface touch screen video display terminals. The PCS control system interfaces with the Central Control & Supervisory System (CCSS) to provide alarm and status monitoring information to the wide panel displays and operator work stations located in the main control room.

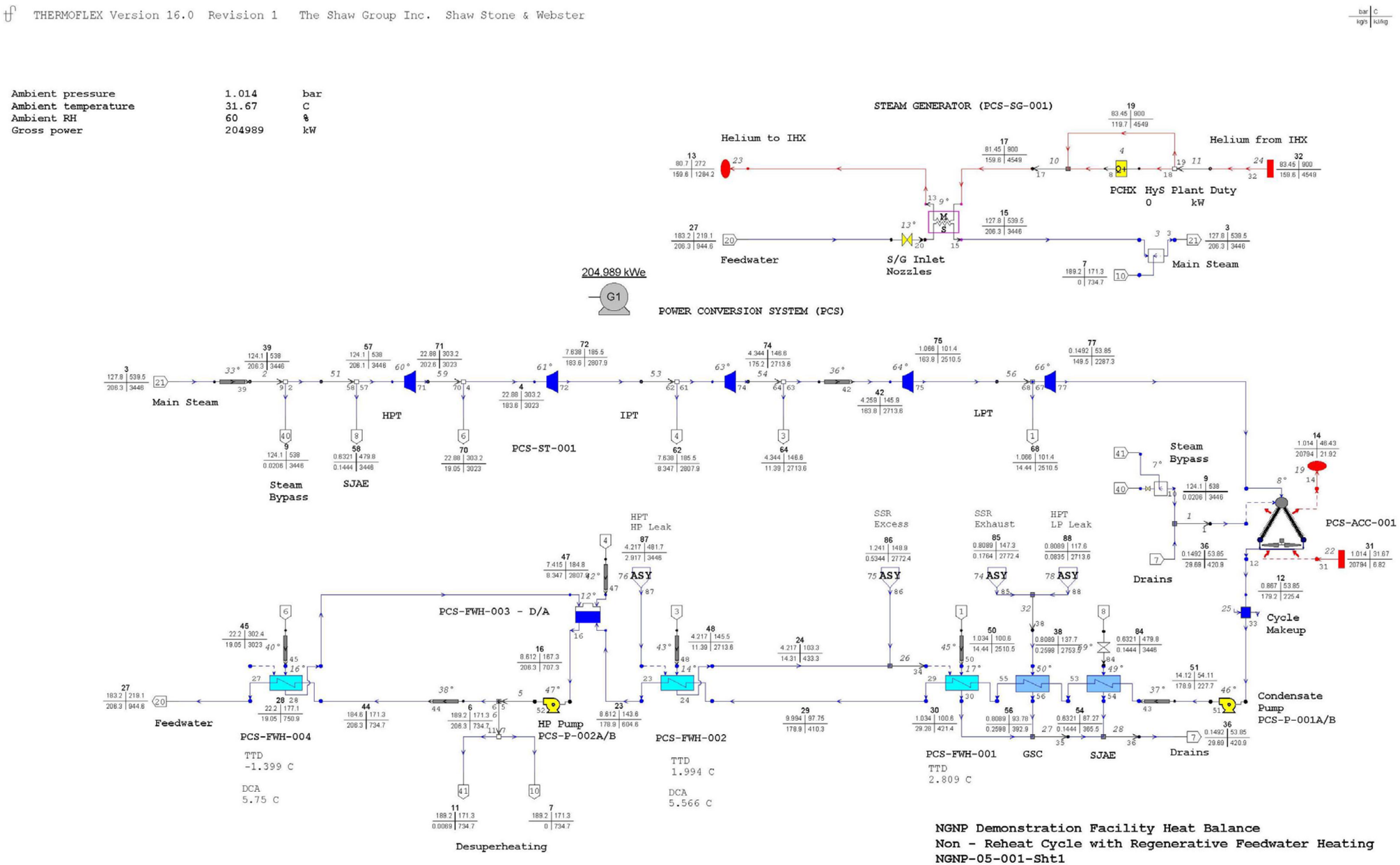

Figure 8-1: Demonstration Facility Heat Balance – No HPS in Operation

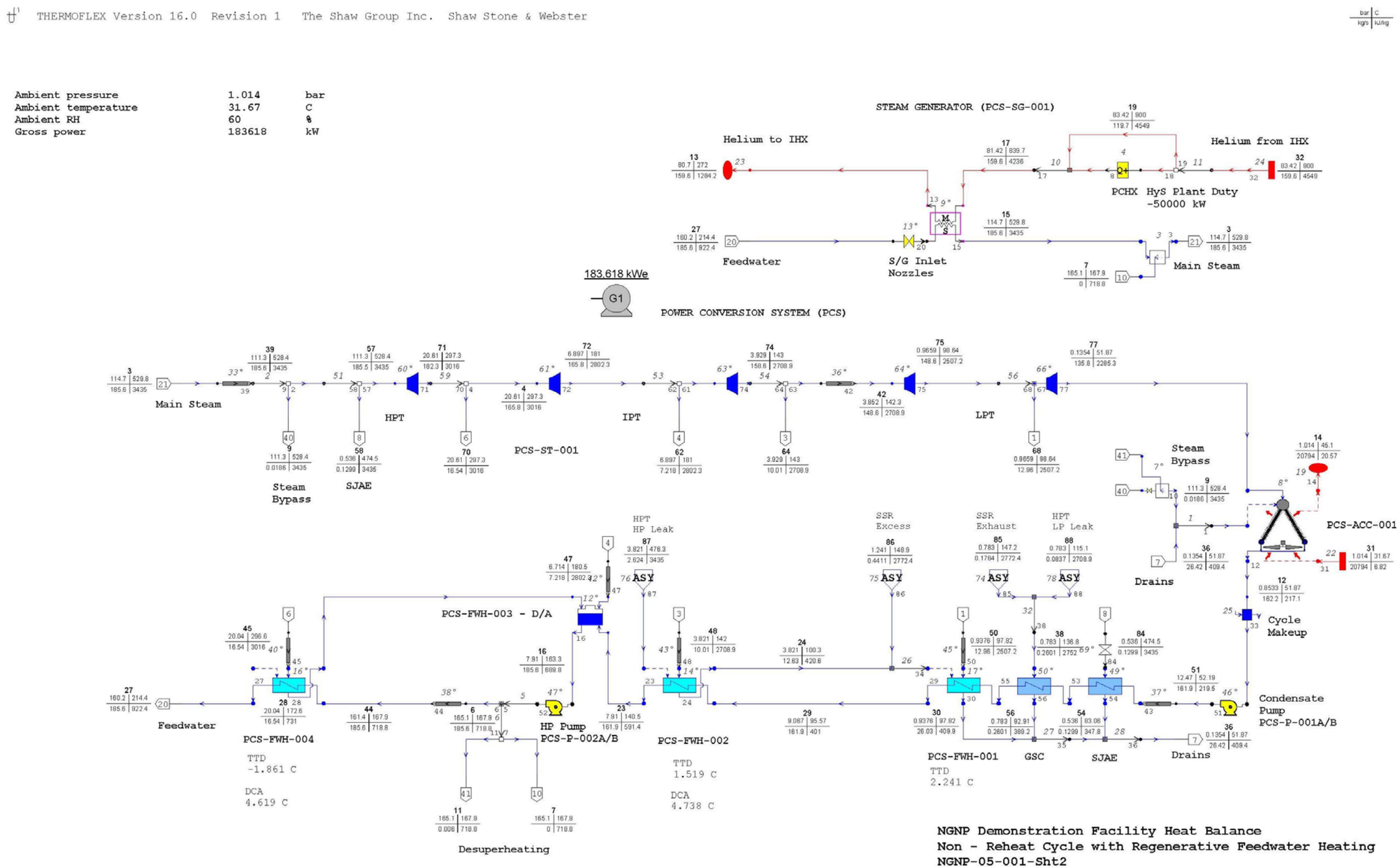

Figure 8-2: Demonstration Facility Heat Balance – HPS in Operation

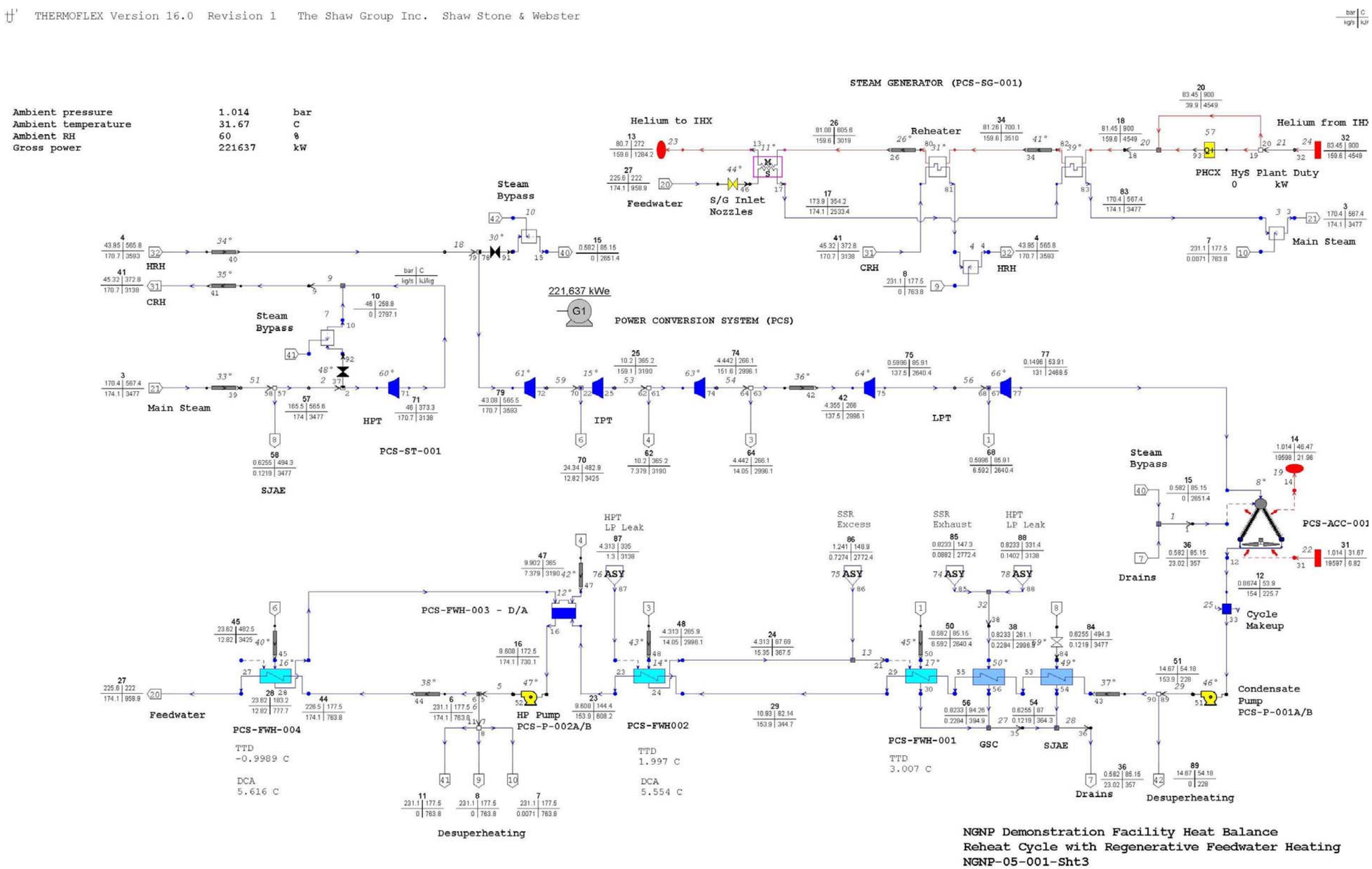

Figure 8-3: Demonstration Facility Heat Balance – Reheat Cycle

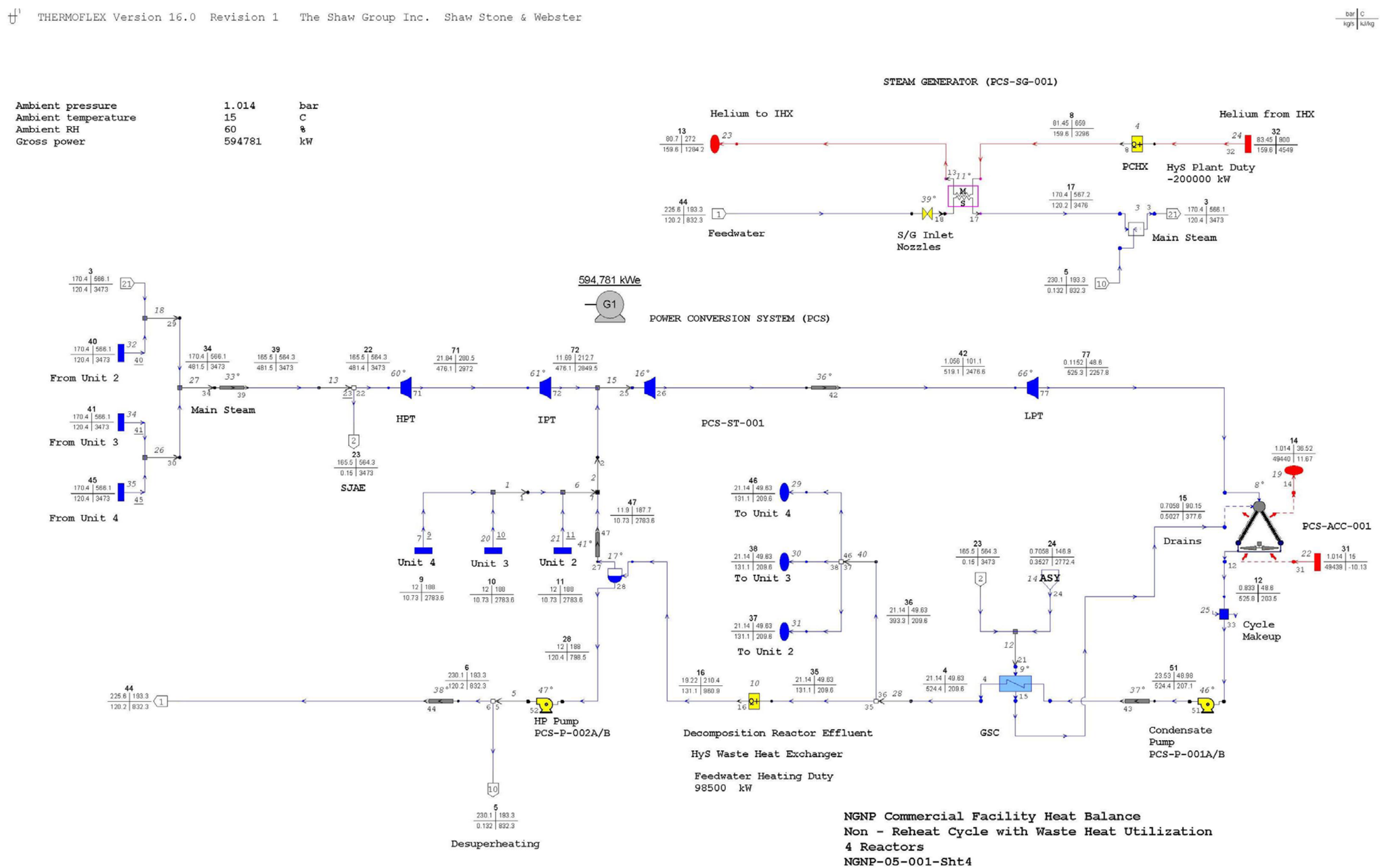

Figure 8-4: Commercial Facility Heat Balance – Non-Reheat Cycle

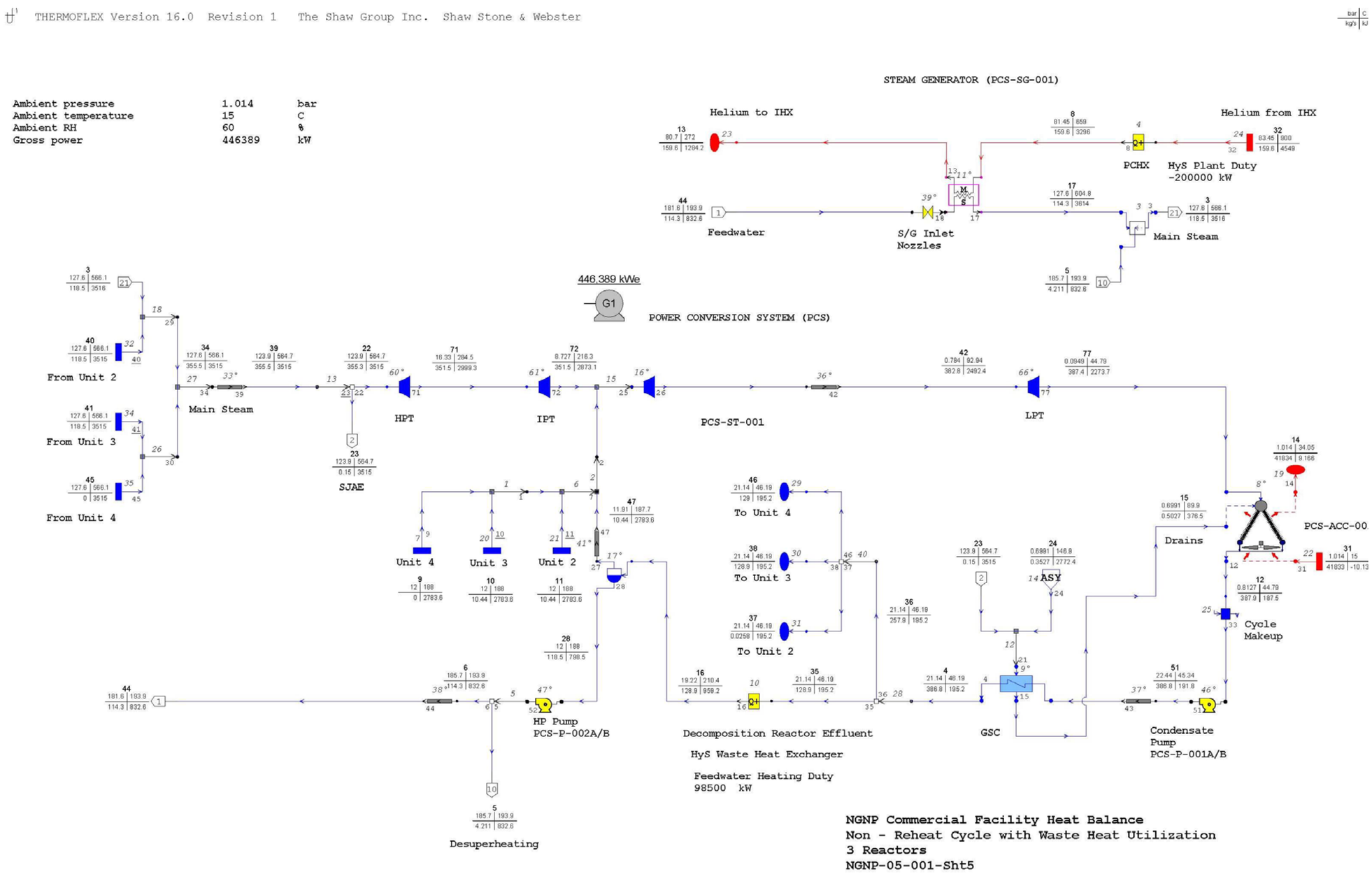

Figure 8-5: Commercial Facility Heat Balance – 3 Reactors

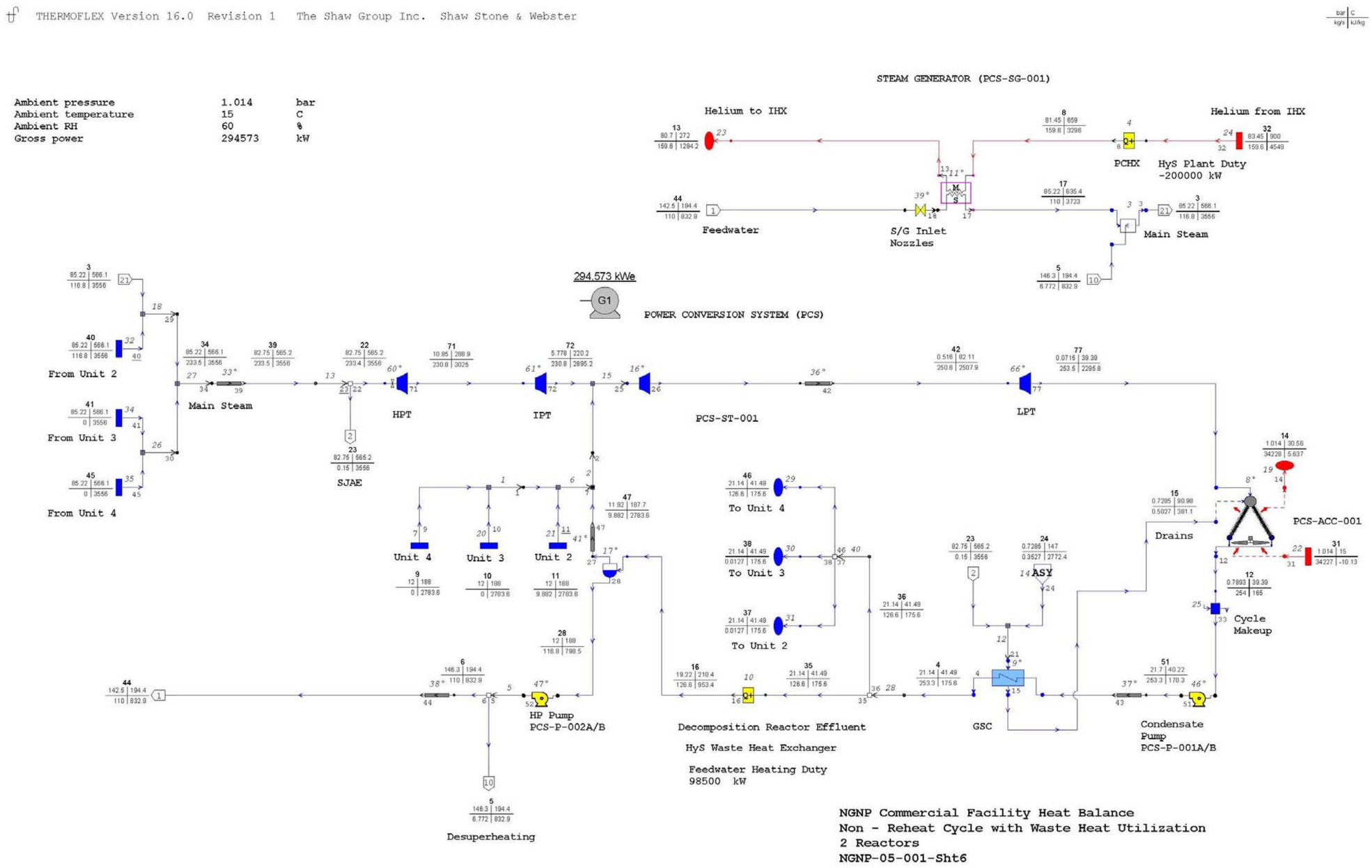

Figure 8-6: Commercial Facility Heat Balance – 2 Reactors

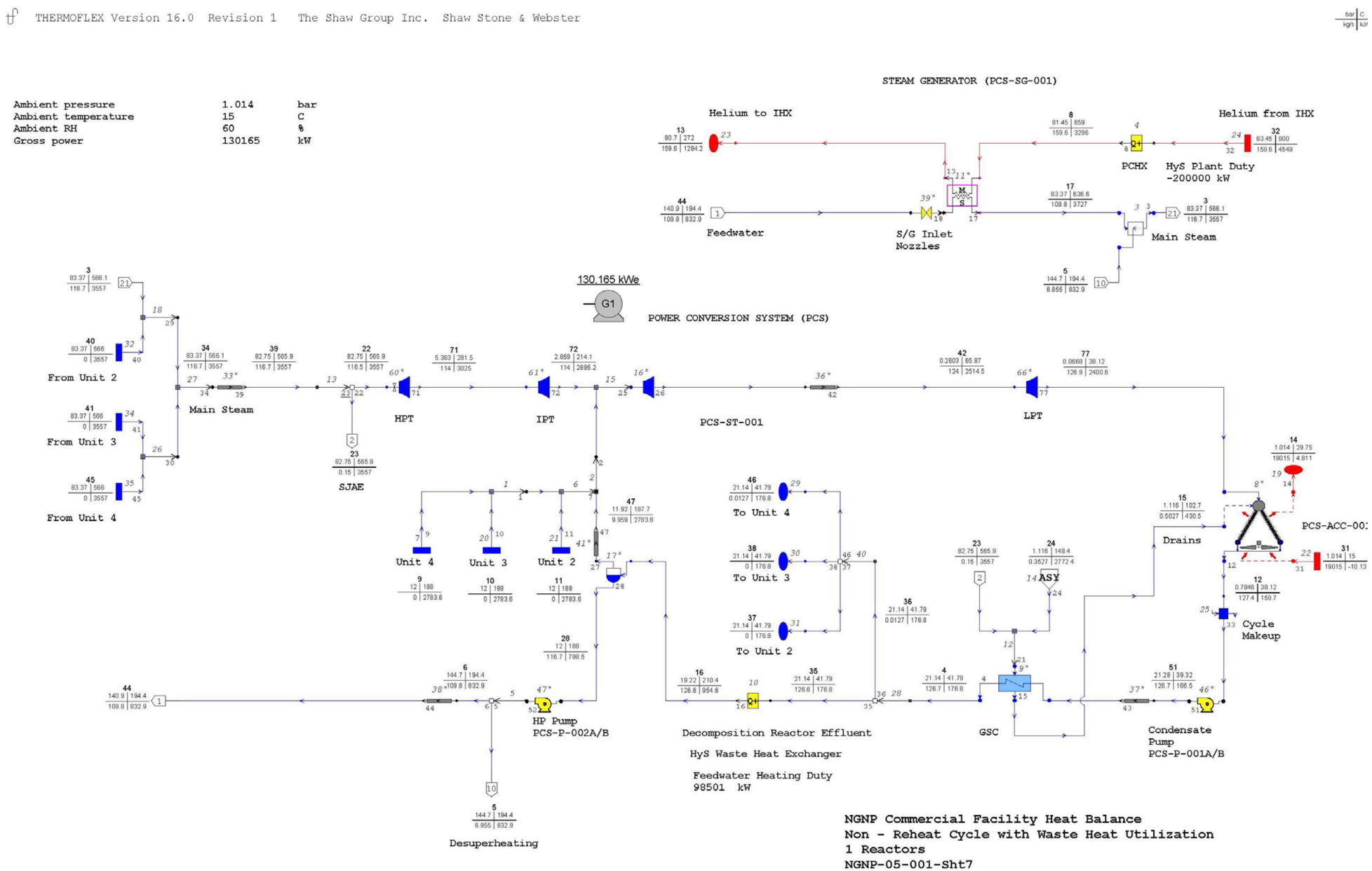

Figure 8-7: Commercial Facility Heat Balance – 1 Reactors

8.2.2 System Description

The PCS consists of the following subsystems:

- Main Steam/Extraction Steam, including the Steam Generator and Steam Turbine
- Condensate/Feedwater System, including the Air Cooled Condenser and accessories
- Heater Drains
- Demineralized Water
- Chemical Addition

Design codes applicable to each subsystem are identified below. Customary structural, electrical, and instrumentation codes and standards are to be identified in detail during the conceptual design phase.

Main Steam/Extraction Steam – Piping

The main steam/extraction steam piping within the PCS consists of equipment and piping for the transport of high pressure steam to the steam turbine, and high and low pressure extraction steam to the feedwater heaters. It also provides bypass and relief capability during off-normal operation. The following table is based on Figure 8-1.

Table 8-1: Main Steam/Extraction Steam Piping

Fluid	Water/Steam
HP Steam Press	12.78 MPa
HP Steam Temp	539.5°C
HP Steam Flow	206.3 kg/s
Materials of Construction	2-1/4 Cr-1 Mo

The main steam system shall have a full flow turbine bypass, including desuperheating designed to route steam from the Steam Generator directly to the condenser.

Applicable Codes
ANSI B31.1
ASME Section VIII

Main Steam/Extraction Steam - Steam Generator (PCS-SG-001)

The function of the steam generator is to produce superheated high pressure steam for conversion into mechanical work in the PCS steam turbine. In the Steam Generator, feedwater exchanges heat with higher temperature helium circulating in the SHTS. Feedwater enters as a sub-cooled liquid and exits as superheated steam. The Main Steam/Extraction System piping transports the steam to Steam Turbine inlet. The pre-conceptual design is based on the HTGR Steam Generator Subsystem Design Description [8-1].

The SG is a vertically oriented, counter-flow, shell-and-tube, once-through, non-reheat tubular type unit, with helium on the shell side and water/steam in the tubes. It incorporates an economizer, an evaporator, and a first stage superheater helical tube bundle, followed by a finishing superheater helical tube bundle. Helium flows downward across the helical tube bundles, between the inner and outer shrouds. Cooled helium flows out of the SG bundle, turns 180°, and flows upward through an annulus created by the SG outer shroud and the Steam Generator vessel I.D. Feedwater is introduced at the bottom of the unit and flows counter current to the helium flow, with superheated steam exiting from the top.

A single SG provides high pressure steam for the PCS. The SG performance parameters are as follows based on Figure 8-1.

Table 8-2: Steam Generator (PCS-SG-001)

Tag	PCS-SG-001
Number Required	1
	Normal
Hot Side	
Fluid	Helium
Inlet Press	8.2 MPa
Inlet Temp	900°C
Helium Flow	159.6 kg/s
Outlet Temp	272°C
Outlet Press	8.1 MPa
Design Temp	Depends on location
Design Press	> 13.2 Mpa
Cold Side	
Fluid	Water
Superheater Outlet Press	12.78 MPa
Superheater Outlet Temp	539.5°C
Main Steam Flow	206.3
Feedwater Temp	219°C
Feedwater Press	18.3 MPa
Design Temp	~300 C
Design Press	>18.5 Mpa
Material of Construction	Tubes; Alloy 800, 2-1/4 Cr-1 Mo Vessel: Low Alloy Steel

The pre-conceptual design for the steam generator is clearly developmental from the perspective of being a new embodiment of a previously applied technology. The steam generator design shown in layout drawings and Figure 8-8 is based on technology developed for early gas-cooled reactors such as Ft. Saint Vrain (FSV) and the Thorium High Temperature Reactor (THTR). The steam generators for these plants operated successfully and the essential

supporting technology in terms of materials, design methods and fabrication methods was demonstrated. Further design development of the design for Modular High Temperature Gas Reactor (MHTGR) applications was accomplished under DOE sponsored programs in the 80's and early 90's [8-3]. This development includes the compact helical arrangement of heat transfer surface and the once-through configuration. Tubing materials are based on conventional boiler materials (2-1/4 Cr -1Mo) for the lower temperature portions of the once-thru tube circuit and Alloy 800H for the higher temperature portion of the tube circuit.

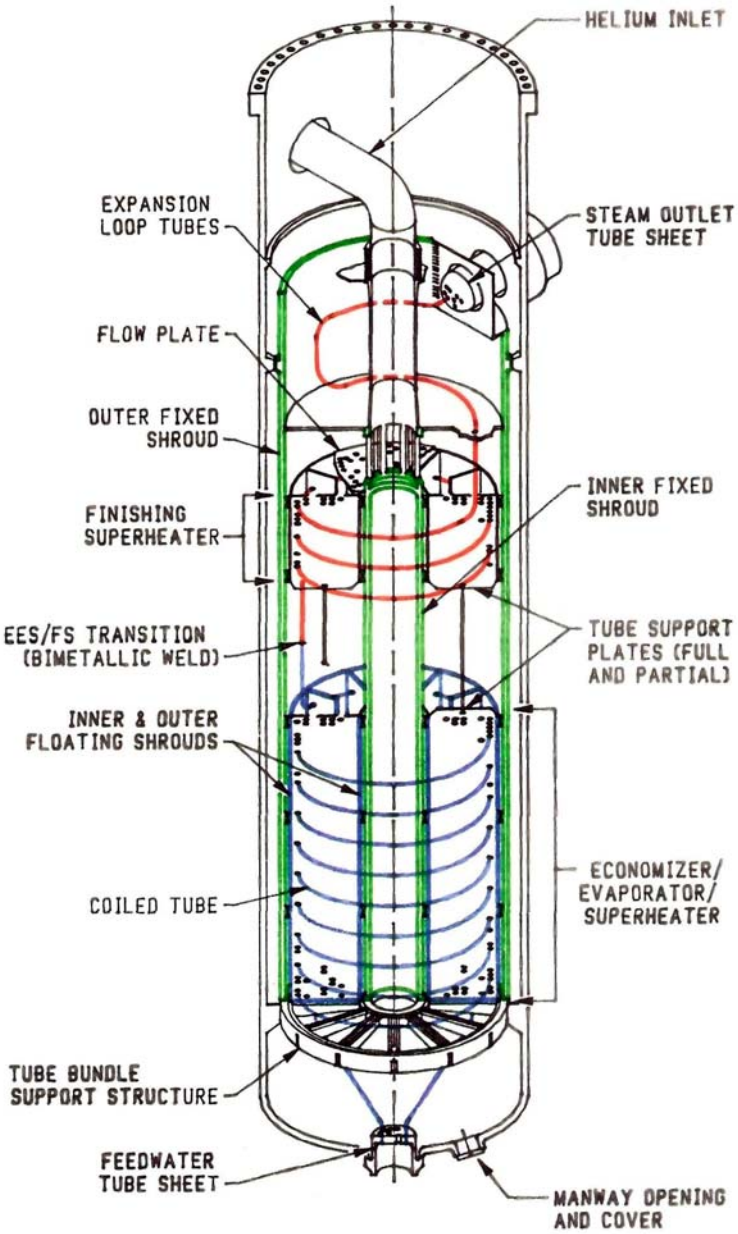

Figure 8-8: Helical Steam Generator

For the proposed NGNP application, the flow path of the helium is arranged so that the enclosing vessel operates at cold helium conditions. Internal structure materials (tube supports, shrouds) are selected consistent with operating temperatures. For the NGNP application (as with prior MHTGR applications), the steam generator is a scale-up in thermal rating relative to early experience. The impact of this scale-up is reflected in a previously recognized and documented set of design development needs:

- The enclosing vessel is designed and fabricated of low alloy steel and is generally within the current state-of-the-art of light water reactor and petrochemical vessel technology.
- The overall size and weight of the completed steam generator is consistent with the current technology basis of large pressure vessels and heat exchangers. As a frame of reference, the steam generator design for the MHTGR has overall height and diameter of 60 feet and 17 feet and estimated weight of 650 US Tons. This configuration was considered transportable to the INL site via a carefully planned and executed transportation scheme. Similar envelopes are likely for the NGNP application.
- The feedwater tubesheet penetration requires special attention from a detailed design perspective and includes an orifice at the inlet of each tube circuit.
- The superheated steam outlet tubesheet is an Alloy 800H forging of large size compared to typical practice with this material. This condition may lead to more than one shell penetration as detailed design proceeds.
- The relatively large thermal rating compared to the operating base is typically accommodated by adding tube circuits. This design introduces uncertainties in performance characteristics on both the helium and water side of the tube, structural design of the tube bundle as well as fabrication and assembly techniques.
- Other configuration specific needs include consideration of wear protection of tube surfaces at support locations.

Additional discussion of steam generator design data needs is contained in Section 8.3.

Applicable codes

ASME VIII with guidance and methods from Section III and high temperature nuclear codes
ANSI B31.1

Main Steam/Extraction Steam - Steam Turbine (PCS-ST-001)

The ST converts a portion of the available energy of the high pressure steam to mechanical work used to drive an electrical generator. The PCS utilizes a single, sliding pressure, two casing, non-reheat, condensing steam turbine. The ST design parameters were selected typical of well proven, mid sized power generation applications, to provide flexible and reliable service. Turbines of this size are commercially proven and readily available from numerous manufacturers [8-9]. The turbine is equipped with 100% bypass capability,

eliminating the need for rapid reactor load changes in response to a sudden turbine load rejection or trip.

The ST/Generator performance parameters based on Figure 8-1 are as follows:

Table 8-3: Steam Turbine (PCS-ST-001)

Tag	PCS-ST-001
Number Required	1
Fluid	Water/Steam
HP Steam Press	12.41 MPa
HP Steam Temp	538°C
HP Steam Flow	206.1 kg/s
Approximate Gross Power	204,990 KWe

Condensate/Feedwater System – Piping

The feedwater/condensate piping within the PCS consists of equipment and piping for the transport of low pressure liquid condensate, and high pressure feedwater through a series of feedwater heaters where it is heated and deaerated by extraction and gland steam. The final heated feedwater is supplied to the steam generator where it is evaporated and superheated at a high pressure. It also provides bypass desuperheating capability during off-normal operation.

Table 8-4: Condensate/Feedwater Piping

Fluid	Water/Steam
HP Feedwater Press	18.9 MPa
HP Feedwater Temp	219.1°C
HP Feedwater Flow	206.3 kg/s
Materials of Construction	CS

Applicable codes
ANSI B31.1

Condensate/Feedwater System - Air Cooled Condenser (PCS-ACC-001)

An ACC is a type of heat exchanger used to condense steam by rejecting heat to the ambient air. A typical unit consists of a number of modules arranged in parallel, with each module containing a number of finned tube bundles. Steam exhausted from the Steam Turbine is ducted to the ACC tube bundles. An axial flow forced draft fan located in each module, forces ambient air across the outside of the finned tubes, cooling the steam allowing it to condense within the tubes. The condensed steam drains by gravity from the ACC into a condensate receiver.

An ACC was selected in lieu of a liquid cooled condenser/cooling tower combination due to the limited availability of makeup water at the planned site. Facility water is pumped from on-site wells in the Snake River Plain aquifer.

The ACC performance based on Figure 8-1 is as follows:

Table 8-5: Air Cooled Condenser (PCS-ACC-001)

Tag	PCS-ACC-001
Number Required	1
Number of Cells	36
Cell Dimensions	11.6 m x 31.1 m
Condensing Fluid	Water/Steam
Inlet Steam Press	0.015 MPa
Inlet Steam Temp	53.9°C
Inlet Steam Flow	149.5 kg/s
Ambient Air Dry Bulb	31.7°C
Ambient Air Flow	20,794 kg/s
Power Consumption (36 cells)	3056 kWe
Materials of Construction	Tubes: Galvanized Carbon Steel Fins: Aluminum

Applicable codes
ANSI B31.1

Condensate/Feedwater System – Condensate Pumps (PCS-P-001A/B)

Condensate Pumps are used to pump the condensed steam (condensate) from the ACC condensate receiver through several low pressure feedwater heaters to the deaerator. The Condensate Pumps are multi-stage vertical turbine pumps with electric motor drives.

The Condensate Pump performance is as follows:

Table 8-6: Condensate Pumps (PCS-P-001A/B)

Tag	PCS-P-001A/B
Number Required	2 x 100%
Fluid	Water
Capacity	655 m^3/hr
TDH	175 m
NPSHA	Flooded Suction
Pump Type	Vertical Turbine
Power Consumption (each)	429.1 kWe

Applicable codes
ANSI B31.1
ASME VIII

Condensate/Feedwater System – Condensate Polishing

Condensate polishing is used to remove impurities introduced into the cycle by corrosion of system materials, conditioning chemicals, or in-leakage. Polishing reduces the deposition of impurities within the Steam Generator and on the Steam Turbine blades. Condensate Polishing systems typically consist of mixed bed ion exchange resins or filtered demineralizers, located downstream of the Condensate Pumps.

Table 8-7: Condensate Polishing

Number Required	2 x 100%
Fluid	Water
Capacity	181.8 kg/s

Condensate/Feedwater System – Feedwater Heaters (PCS-FWH-001 through 005)

Feedwater heaters are heat exchangers used to pre-heat water delivered to the Steam Generator. They have the effect of reducing the temperature difference at which heat is added to the power cycle; improving the thermodynamic efficiency of the cycle. Closed regenerative heaters condense steam extracted from the steam turbine expansion path on the outside of tubes carrying feedwater. Closed heaters allow the feedwater and condensing steam to be at different pressure levels. Typically closed heaters form a cascading arrangement, where the condensed steam from the shell section of a higher pressure heater is cascaded to the inlet of a lower pressure heater where it can perform additional feedwater heating. In contrast open feedwater heaters allow direct contact between the feedwater and condensing steam. Open feedwater heaters are often used to remove oxygen and other non-condensable dissolved gases from the feedwater reducing the water's corrosive potential. When used in this capacity, the open feedwater heater is known as a deaerator.

The low pressure and high pressure closed regenerative feedwater heaters are shell and tube heat exchangers with feedwater on the tube side, and condensing steam on the shell side. The deaerator is integrally mounted on the feedwater storage tank, which is an elevated, horizontally mounted cylindrical vessel with dished ends. The cylindrical vessel serves as feedwater storage. The heater section is mounted on the top of the vessel; within is a cascade of perforated trays. Feedwater is introduced at the top of the trays, extraction steam at the bottom. The counter-flowing steam heats the feedwater to remove dissolved gases, and also sweeps away non-condensables. A source of high pressure pegging steam is provided to the deaerator to prevent its pressure from dropping in the event of a sudden loss of extraction steam pressure (e.g. during a turbine trip), preventing loss of Net Positive Suction Head Available (NPSHA) at the feedwater pump.

The Feedwater Heater performance based on Figure 8-1 is as follows:

Table 8-8: Feedwater Heater (PCS-FWH-001)

Tag	PCS-FWH-001
Number in parallel	1
Inlet Feedwater Press	1.16 MPa
Inlet Feedwater Temp	55.6°C
Inlet Feedwater Flow	178.9 kg/s
Condensing Steam Press	0.104 MPa
Condensing Steam Temp	100.6°C
Outlet Feedwater Temp	97.7°C
TTD	2.8°C
DCA	N/A
Materials of Construction	Shell: Carbon Steel Tubes: 304 SS

Table 8-9: Feedwater Heater (PCS-FWH-002)

Tag	PCS-FWH-002
Number in parallel	1
Inlet Feedwater Press	1.0 MPa
Inlet Feedwater Temp	97.7°C
Inlet Feedwater Flow	178.9 kg/s
Outlet Feedwater Temp	143.6 °C
Condensing Steam Press	0.42 MPa
Condensing Steam Temp	145.5°C
Outlet Feedwater Temp	143.6°C
TTD	2.00°C
DCA	5.55°C
Materials of Construction	Shell: Carbon Steel Tubes: 304 SS

Table 8-10: Feedwater Heater (PCS-FWH-003)

Tag	PCS-FWH-003 / Deaerator
Number in parallel	1
Condensate Press	0.86 MPa
Condensate Temp	143.6 °C
Condensate Flow	178.9 kg/s
Inlet Steam Press	0.74 MPa
Inlet Steam Temp	184.8°C
Inlet Steam Flow	8.3 kg/s
Other Inlet Press	2.2 MPa
Other Inlet Temp	177.1°C
Other Inlet Flow	19.1 kg/s
Outlet O2 Concentration	7 ppb
Outlet Temp	Within 1°C of saturation
Materials of Construction	Shell: Carbon Steel Tubes: 304 SS

Table 8-11: Feedwater Heater (PCS-FWH-004)

Tag	PCS-FWH-004
Number in parallel	1
Inlet Feedwater Press	18.5 MPa
Inlet Feedwater Temp	171.3°C
Inlet Feedwater Flow	206.3 kg/s
Condensing Steam Press	2.2 MPa
Condensing Steam Temp	302.4°C
Outlet Feedwater Temp	219°C
TTD	-1.4°C
DCA	5.75°C
Materials of Construction	Shell: Carbon Steel Tubes: 304 SS

Applicable Codes
ASME VIII

Condensate/Feedwater System - Feedwater Pumps (PCS-P-002A/B)

Feedwater Pumps are used to pump deaerated feedwater through one or more high pressure feedwater heaters, to the Steam Generator. During steam bypass operation, the Feedwater Pumps supply attemporation water to the HP steam conditioning valves. Feedwater pumps are horizontal, segmental ring or barrel case, multi-stage, centrifugal pumps, driven by an electric motor.

The Feedwater Pump performance is as follows:

Table 8-12: Feedwater Pumps (PCS-P-002A/B)

Tag	PCS-P-002A/B
Number Required	2 x 100%
Fluid	Water
Capacity	825 m^3/hr
TDH	2100 m
NPSHA	LATER
Pump Type	Multi-stage centrifugal
Power Consumption (each)	6005 kWe
Materials of Construction	12% Chrome Steel

The feedwater pump is sized such as to enable it to pump sufficient water into the Steam Generator when the pressure in the latter is at the highest safety valve set point, plus code allowable accumulation.

Applicable codes
ANSI B31.1
ASME VIII

Heater Drains System

The Heater Drains System within the PCS consists of equipment and piping for the transport of feedwater heater condensate drains from the feedwater heater shell to a lower pressure heater inlet, or to the condenser. Condensate liquid level in the feedwater heater is controlled by two valves, a normal heater drain valve and an emergency heater drain valve. The emergency heater drain valve bypasses the feedwater heater cascade, routing drains directly to the condenser. Its function is to open on high liquid level in the heater, preventing liquid induction into the Steam Turbine; it is also used during startup and shutdown procedures.

Table 8-13: Heater Drains

Fluid	Water/Steam
HP Drain Press	2.2 MPa
HP Drain Temp	177.1°C
HP Drain Flow	19.1 kg/s
HP Materials of Construction	Carbon Steel
IP/LP Materials of Construction	Carbon Steel

Applicable Codes
ANSI B31.1

Chemical Addition System

The Chemical Addition System supplies chemicals to the feedwater stream to control the water chemistry. Proper water chemistry reduces the corrosivity of the feedwater, and prevents deposits from forming within the Steam Generator or on the Steam Turbine blades. The system typically consists of skid mounted metering pumps and equipment, along with chemical feeds supplied in Tote type containers. Typical chemicals consist of the following:

Table 8-14: Chemical Addition System

Chemical	Purpose
Amines	Neutralize acids generated by dissolution of carbon dioxide in the condensate and pH control
Oxygen scavengers	Remove small amounts of oxygen remaining in the feedwater after air removal in the deaerator.

PCS Control System

The PCS control system is a Distributed Control System (DCS) with redundant control processors and a redundant (dual loop) fiber optic real time high-speed data network. The control system for the Power Conversion System interfaces with the CCSS (and all of the local DCS components (Processors, I/O Cabinets, Displays, Graphical User Interface (GUI) Controls,

Engineering Work Stations and all other Operator Interfaces) by means of a high-speed, redundant, real time data network. The DCS processors are configured in a dual redundant mode with automatic fail-over to the redundant processor if a fault is detected in a running processor. The GUI displays and controls are located in the main control room.

Except where absolutely necessary for local maintenance and troubleshooting activities, the use of local (field mounted) switches and gages is avoided. All required inputs are derived from field mounted sensors and transmitters and then sent directly to the PCS control system. The design of the Power Conversion System control system incorporates Smart (Bus Technology) instruments utilizing Foundation Field bus protocols.

PCS Support Systems

Steam Turbine Package Ancillary Equipment

The following equipment supports the operation of the steam turbine, and is typically in the turbine vendor's scope of supply:

- Turbine Control System
- Main Steam Control Valves
- Solid State Speed Governor
- Trip/Overspeed Protective Systems
- Control Oil System
- Gland Steam Seal System
- Lubricating Oil System
- Turbine Instrumentation
- Excitation and Electrical Equipment
- Generator Cooling (Hydrogen)
- Generator Purging (Carbon Dioxide)
- Turbine Auxiliary Cooling
- Turbine Building Heating Ventilation and Air Conditioning (HVAC)

8.2.3 Major System Interfaces

The PCS interfaces with numerous plant systems. The main interfaces for each subsystem are listed below:

Main Steam/Extraction Steam, includes the Steam Generator and Steam Turbine

Table 8-15: Main Steam/Extraction Steam System Interfaces

System	Interface
NHSS/HTS	Provides energy input to the PCS, also the PCS design basis requires the PCS to mitigate transient events originating in the NHSS. The interface is at the Steam Generator SHTS Helium nozzles. The Steam Generator forms part of the SHTS pressure boundary.
Condensate/Feedwater System	Receives extraction steam as energy input to feedwater heaters used to heat and deaerate feedwater. Steam Turbine exhaust is condensed in the ACC. The interface is at the feedwater heater nozzles, and ACC inlet.
Auxiliary Steam Boiler	Provides gland steam during startup as required
Steam Sampling System	Steam is sampled at various locations within the cycle to assure proper chemistry and quality.

Condensate/Feedwater System, including the Air Cooled Condenser

Table 8-16: Condensate/Feedwater System Interfaces

System	Interface
Main Steam/Extraction Steam System	Provides energy input to feedwater heaters used to heat and deaerate feedwater. Steam Turbine exhaust is condensed in the ACC. The interface is at the feedwater heater nozzles, and ACC inlet.
Demineralized Water	Provides makeup water to the cycle. The interface is at the condenser makeup nozzle.
Chemical Addition	Provides chemicals to control water chemistry and quality
Auxiliary Steam Boiler	Provides deaerator steam during startup as required
PCS Sampling System	Feedwater is sampled at various locations within the cycle to assure proper chemistry and quality.

Control System Interfaces

The PCS control system interfaces with all of the systems and support systems required to operate and control the power conversion process. In addition, package/skid mounted systems (such as water treatment, waste treatment, fire protection, air compressors, ventilation systems, etc.) are purchased with integral microprocessor based control systems that provide both automatic and manual control and display functions through the use of graphical user interface

touch screen video display terminals. These integral control systems interface with the PCS control system to provide alarm and status monitoring information to the wide screen display panels and operator/engineering workstations located in the main control room. Limited control functions may also be provided.

Primary control of the PCS is co-located with the Nuclear and Steam Generation Module in the Main Control Room (MCR).

BOP System Interfaces

Other miscellaneous systems supporting the operation of the PCS include:

- Auxiliary Cooling Circuit (Component Cooling) Water
- Plant Water
- Chilled Water
- Demineralized Water
- Auxiliary Steam Boiler
- Instrument Air
- Service Air
- Gas Storage and Supply
- Steam Sampling
- HVAC
- Controls and Instrumentation
- Electrical Systems
- Fire Protection

8.2.4 System Operation

Startup

PCS startup is performed with the Main Steam System in bypass mode. Main steam flow bypasses the Steam Turbine and goes directly to the ACC. Startup vent and drain valves are open. The main steam line is warmed slowly, using the High Pressure HP turbine bypass to control main steam pressure. Once the main steam line reaches the operating setpoint, the Main Steam Stop valve begins to open, starting the turbine warm up procedure. As startup is completed, drain valves close automatically in response to system parameters.

Normal Operation

Normal operation encompasses the range in feedwater flows from 25% to 100%. The PCS is designed to operate with the HPS in or out of service. During normal operation, the Main Steam System conducts high pressure steam from the Steam Generator through the Steam Turbine to the ACC. During operation with the HPS in service, the PCS operates at less than 100% Steam Generator and Steam Turbine rated capacity.

Turbine Trip and Partial Load Rejection

During a turbine trip, or partial load rejection, the Main Steam System operates in full or partial bypass mode sending desuperheated high pressure steam directly to the ACC. The bypass valve opens rapidly on high pressure, preventing over-pressurization and the need for actuation of the safety valves at the Steam Generator.

Transients

The design basis of the PCS with respect to response to transients requires that transient events initiated in the PCS not adversely affect the NHSS system. Further, transient events initiating in the NHSS system are mitigated by the PCS. The nature and scope of design basis transient events are to be determined in the conceptual design phase.

Shutdown

PCS shutdown is performed by transitioning the Main Steam System to bypass mode; main steam flow bypasses the Steam Turbine and goes directly to the ACC. As the system cools and depressurizes, nitrogen is injected to maintain pressure above atmospheric and prevent the ingress of air.

Control System Operation

Operation of the PCS is accomplished by means of Graphical User Interface screens presented on CRT/LCD video display terminals. Touch screen technology / graphical user interfaces are utilized for operator display selection and control interface. Primary control is provided by automated control logic that allows the operator to monitor plant status without the need for frequent manual operator control interface. In general, preplanned manual operator control is limited to startup and normal shutdown functions and changes in plant operating

configurations. [Example increased Hydrogen Production with a simultaneous reduction in Electrical Power output.]

NGNP Demonstration vs. Commercial Operation

The following table shows the electric power balance for the PBMR NGNP demonstration case of one NHSS reactor operating at approximately 500 MWt. with HPS operating at 50 MWt, based on heat balance in Figure 8-2. The full scale commercial case is for 4 reactors at 500 MWt each and 16 HPS units at 50 MWt each, based on heat balance in Figure 8-4.

Credit is taken for use of the HPS waste heat for feedwater heating in lieu of the four feedwater heaters used in the NGNP prototype case. Onsite power consumption is based on estimates to be verified (TBV).

Table 8-17: NGNP/Commercial Electric Power Energy Balance with HPS Operating

Item	NGNP	MWe	Commercial 4 Reactors	MWe	Remarks
1.	PCS Gross output	184	PCS Gross output	595	Based on Heat balances Figure 8-1, and 8-4
2.	NHSS/HTS House loads	-27	4 NHSS House	-112	Primary blower included at 11.4 MWe; secondary blower at 13 MWe.
3.	NHSS/HTS BOP loads	-2	4 NHSS/HTS BOP loads	-8	Estimated for BOP systems supporting NHSS
4.	HPS house loads	-15	16 units	-240	Includes electrolyzers and miscellaneous normally operating loads.
5.	HPS BOP house load	-1	16 HPS BOP house load	-16	Estimated for BOP systems supporting HPS
6.	PCS house load	-9.5	PCS house load	-14	Includes condenser fans , Condensate, feedwater pumps
7.	PCS BOP house load	-1	PCS BOP house load	-2	Estimated for BOP systems supporting PCS
8.	BOP common facility House load	-2	Common House load	-6	Estimated for BOP systems supporting Common Buildings
9.	Power available to grid	126.5	Power available to grid	197	Values provided for use in Economic Analysis in PCDR Section 19.

The following Table 8-19 shows part load commercial cases for 1, 2, and 3 reactors operating at 500 MWt each and 4, 8, and 12 HPS units respectively, at 50 MWt each, based on heat balances in Figure 8-5, Figure 8-6, and Figure 8-7.

In all these cases credit is taken for use of the HPS waste heat for feedwater heating in lieu of the four feedwater heaters used in the NGNP demonstration case. Again, onsite power consumption is based on estimates to be verified (TBV).

Table 8-18: Commercial Part Load Electric Power Energy Balance with HPS Operating

Item	1 Reactor	MWe	2 Reactor	MWe	3 Reactors	MWe
1.	PCS Gross output	130	PCS Gross output	295	PCS Gross output	446
2.	NHSS/HTS House loads	-27	2 NHSS House	-54	NHSS/HTS House loads	-81
3.	NHSS/HTS BOP loads	-2	-4	-6	NHSS/HTS BOP loads	-6
4.	4 HPS house loads	-60	8 HPS house loads	-120	12 HPS house loads	-180
5.	HPS BOP house load	-4	HPS BOP house load	-8	HPS BOP house load	-12
6.	PCS house load	-8.5	PCS house load	-10.6	PCS house load	-12
7.	PCS BOP house load	-1	PCS BOP house load	-1.5	PCS BOP house load	-2
8.	BOP common facility House load	-2	Common House load	-3	BOP common facility House load	-4
9.	Power Net available to grid	25.5	Power available to grid	91.9	Power available to grid	149

PBMR NGNP Demonstration Electric Power Production Only

The following table shows an energy balance of the PBMR NGNP power cycle. This shows the results of the power cycle design based on summer design ambient conditions. The net power cycle efficiency is 163 MWe / 500 MWt = 32.6 percent.

Table 8-19: Electric Power Energy Balance without HPS Operating

Item	NGNP		Remarks
1.	PCS Gross output		Based on Heat balances Figure 8-1 assumes summer design conditions.
2.	NHSS/HTS House loads		Primary blower included at 11.4 MWe; secondary blower at 13 MWe.
3.	NHSS/HTS BOP loads		Estimated for BOP systems supporting NHSS
4.	HPS house loads		Includes electrolyzers and miscellaneous normally operating loads.
5.	HPS BOP house load		Estimated for BOP systems supporting HPS
6.	PCS house load		Includes condenser fans, Condensate, and feedwater pumps
7.	PCS BOP house load		Estimated for BOP systems supporting PCS
8.	BOP common facility House load		Estimated for BOP systems supporting Common Buildings
9.	Power Net available to grid		Values provided for use in Economic Analysis in PCDR Section 19.

8.3 DESIGN DEVELOPMENT NEEDS

The Steam Generator has been identified as a developmental component based on prior design development experience for other HTGR applications. The requirements, configuration, materials and design features of this component require that a number of development needs be satisfied for successful design, manufacturing, delivery and long term operation of the prototype and follow-on components.

8.3.1 Functions

1. Contain the SHTS helium coolant and PCS working fluid, feedwater and steam
2. Transfer thermal energy from the SHTS helium coolant to the PCS working fluid Feedwater (FW) and Main Steam (MS)

8.3.2 Key Requirements

The specified service conditions and other key requirements influencing DDNs for the SG are given below:

- Nominal SHTS helium inlet temperature of 900ºC and outlet temperature of 270ºC
- FW inlet temperature of nominally 220ºC
- Nominal 540ºC steam outlet temperature
- Helium loop pressure of 8.2MPa
- Forced outage allocation is [<1%]
- Operating life:
  - The design service life is 60 equivalent full-power years.
  - Provisions are made in the design for economic replacement of a given part or component as required.

8.3.3 Design Data Needs

Eighteen DDNs are identified for the Steam Generator. These DDNs were identified in the context of the design requirements of the MHTGR. These DDNs are generally appropriate but must be refined when the design for the NGNP application is more clearly defined.

Table 8-20: Steam Generator Design Data Needs

DDN	Item	Category
PCS-01-01	Secondary side Corrosion Characteristics 800H & 2-1/4Cr-1Mo and Weldments	Materials
PCS-01-02	Helium Environment Effects on 2-1/4 Cr-1Mo	Materials
PCS-01-03	Helium Environment Effects on 800H	Materials
PCS-01-04	Acoustic Response of Helical Bundle	Performance
PCS-01-05	Large Helical Coil Fabrication Test	Fabrication
PCS-01-06	Inlet Flow Distribution	Performance
PCS-01-07	Insulation Verification Test	Design
PCS-01-08	Fretting & Sliding Wear Protection Tests	Materials
PCS-01-09	Tube Wear Protection Device Testing	Design
PCS-01-10	Shroud Seal Test	Design
PCS-01-11	Lead-in/Lead-out/Transition/Expansion Loop Mockups	Fabrication
PCS-01-12	Flow Induced Vibration Testing of Helical Bundle	Performance
PCS-01-13	Orifice Qualification Test	Performance
PCS-01-14	Instrumentation Attachment Test	Design
PCS-01-15	Bi-Metallic Weld Structural Integrity	Design
PCS-01-16	Helical Bundle and Transition Region Heat Transfer Test	Performance
PCS-01-17	Tubing Inspection Methods and Equipment	Design
PCS-01-18	Review and Reassemble Existing SG Development Data Base	All

DDN PCS-01-01 Secondary side Corrosion Characteristics 800H & 2-1/4Cr-1Mo and Weldments

2¼Cr-1 Mo material is used for the steam generator tubing in the economizer, evaporator, and initial superheater (EES) sections and Alloy 800H material is used for the tubing in the Finishing Superheater (FS) section of the steam generator. Therefore, a Bimetallic Weld (BMW) (or dissimilar metal weld) exists in each tube circuit in a transition region between the EES and the FS sections. In addition, there are several Alloy 800H butt welds in each tube circuit along the Alloy 800H section of the tube bundle. Data are required to assess the secondary side (tube side) corrosion resistance of the Alloy 800H base material and weldments, including the BMW, under long-term exposure to wetting and drying conditions, and its tolerance to off-nominal feedwater chemistry.

1. Assumptions

Assumption 1: BMW and Alloy 800H tubing downstream should not be wetted during steady-state conditions;

Assumption 2: 25°C minimum superheat is acceptable for BMW and Alloy 800H tubing downstream during steady-state conditions;

Assumption 3: Occasional wetting of BMW (hence, the Alloy 800H section) is acceptable in the short term provided that the water quality is controlled within defined limits.

2. Current Database Summary

The Alloy 800 family of material is known to be one of the more corrosion resistant among the austenitic stainless steels. While the experience with FSV and THTR is excellent, the data base is limited. There is not much long-term corrosion data on Alloy 800H material operating under controlled “once-through” evaporator conditions. In the laboratories, this material is shown to be susceptible to stress corrosion cracking under certain feedwater chemistry conditions when exposed to a wet environment. These tests show that the stress corrosion rates are affected by a complex interaction of stress, material conditions, temperature, pressure and environment.

In addition to stress corrosion cracking, available data, primarily laboratory, suggests that Alloy 800H could be susceptible to other corrosion phenomena such as pitting. Intergranular attack and wastage can result when subjected to local concentration of impurities under high water temperature conditions, as would be the case in the evaporator region of the NGNP steam generator tubes.

3. Summary of Data Needed

Data are needed to assess the secondary side corrosion resistance of the BMW and the Alloy 800H base metal and weldments under long-term exposure to evaporating conditions for the feedwater chemistry specified for the NGNP steam generator. The scope of work for the organization developing this data would consist of, as a minimum:

a. Extensive review of the available literature and data on this subject,

b. Perform autoclave and/or isothermal capsule tests on material and weldment samples,

c. Perform model boiler testing under anticipated operating conditions, including off-nominal FW chemistry,

d. Quantify the corrosion rates,

e. Make recommendation on whether the present location (28°C superheat) of the BMW and Alloy 800H material provides sufficient margin against corrosion damage,

f. Provide basis and justification for the above recommendations,

g. Establish the basis and need for operation controls and procedures.

Quality assurance must be in accordance with the requirements for experimental data or validation test for non-safety related components.

4. Designer's Alternatives

Accept a high level of risk for long-term operation.

5. Selected Design Approach and Explanation

The selected design approach is to obtain data necessary to quantify the secondary side (tube side) corrosion characteristics of the BMW and the Alloy 800H base material and weldments under representative NGNP conditions. This information is used to develop a strategy for environmental control during fabrication, preoperational and operational phases of steam generator life.

6. Schedule Requirements

Initial test data and the accompanying recommendations are needed by the end of the preliminary design phase. If necessary, the test program could be continued through final design to obtain long-term confirmatory data of prototype plant SSCs. It is ultimately required to support NGNP operation by the end of 2018.

7. Priority

Urgency (1-5):	1
Cost-Benefit (L, M, H (Low, Medium High):	H
Uncertainty in Existing Data (L, M, H):	H
Importance of New Data (L, M, H):	H

8. Fallback Position and Consequences of Nonaccomplishment

The consequences to the program of no execution would be to limit or compromise steam generator operation. Extremely stringent controls may be necessary to limit potential fault chemistry ingress.

DDN PCS-01-02 Helium Environment Effects on 2-1/4 Cr-1Mo

Steam generator tubing and plates fabricated from 2-1/4 Cr – l Mo material, with and without weldments, operate at elevated temperature regimes and are exposed to the primary coolant chemistry. It is necessary to assess the effects of the helium environment on the mechanical properties of this material to confirm that the ASME B&PV code may be used without any modification to stress/strain values.

1. Assumptions

Assumption 1: Exposure to primary coolant chemistry and temperature over design life does not significantly degrade the design properties of metals used in the steam generator.

Assumption 2: Exposure to primary coolant chemistry and temperature over design life does not significantly degrade the design properties of metals used in the steam generator.

Assumption 3: Creep-fatigue damage rules in ASME Code Subsection NH for 2-1/4 Cr-1 Mo are conservative.

Assumption 4: ASME Code Subsection NH allowables for the weldments of 2-1/4 Cr-1 Mo are conservative.

Assumption 5: Operation in the elevated-temperature regime does not result in significant fatigue and creep crack growth for 2-1/4 Cr-1 Mo.

2. Current Data Base Summary

The primary coolant contains impurities which may cause material corrosion in the form of oxidation, decarburization and carburization. At the design temperatures of the components, carbon transport has been shown to be the most potentially significant mode of corrosion with respect to bulk mechanical properties such as tensile and creep properties. In addition, surface oxidation along with concurrent carbon transport may significantly affect surface sensitive properties such as fatigue, creep fatigue and crack growth. Another factor that must be considered along with decarburization or carburization is the change in microstructure due to thermal aging.

In the tests performed to date (with pretest aging exposures up to 34,000 hr and creep tests up to 100,000 hr), no influence of testing environment was seen on the creep properties up to l% strain. Also, relatively minimal effect of thermal aging on the creep rupture and rupture ductility was seen at these low strain levels. Previous studies indicate the effect of NGNP primary coolant chemistry on the tensile properties of this material is negligible.

The general effect of thermal aging treatments is to decrease the yield and ultimate tensile strengths. The magnitude of the effect increases with aging temperature and time. Available information on the creep fatigue behavior of 2-1/4 Cr-1 Mo steel have indicated that this material tested in helium environment has improved fatigue life for all test weld forms in comparison with tests in air except for the tensile hold only

tests. Some limited test data obtained on 2-1/4 Cr-1 Mo weldments suggests that these weldments might be as strong as the base metal. Review of available data indicated that low-oxygen environments, including NGNP helium improve the continuous cycling fatigue behavior of this material over the temperature range 914°F (490°C) to 1100°F (593°C).

3. Summary of Data Needed

Data are needed to confirm that exposure to impure primary coolant helium at appropriate temperature does not reduce the selected design mechanical properties of 2-1/4 Cr-1 Mo base metal and its weldments below the values of the ASME Code Subsection NH. The organization performing the tests initially compiles a comparison of the data generated to date on this material, applicable to the NGNP service conditions, to the ASME Code Subsection NH values. Limitations of the existing data and the recommendations for any additional data form part of this compilation report. Based on this report, for the selected properties for which it is judged that sufficient data are not available to make a good comparison or to reach a conclusion, materials testing is performed to generate additional data.

For the selected properties for which ASME Code Subsection NH data are not available (e.g., fracture mechanics data), the data generated need to be sufficient to have reasonable confidence level. Quality assurance must be in accordance with requirements for experimental data or validation testing for non-safety related components.

4. Designer's Alternatives

The alternatives are as follows:

a. Redesign to reduce stress and accommodate arbitrary allowance for changes in material properties. Relocate, strengthen or insulate critical weldments.

b. Reduce helium temperature to limit environmental effects.

c. Modify helium gas chemistry to reduce environmental effects.

d. Use alternate base metal and weldments materials.

e. Design for significantly enhanced inspectability or replaceability.

5. Selected Design Approach and Explanation

The selected design approach is to use 2-1/4 Cr-1 Mo material for the economizer/evaporator/superheater tubes, tube support plates, tube bundle supports and the shrouds. Experimental data is generated where necessary to confirm the stress/strain values in the ASME B&PV code can be used without modification for this material when exposed to the NGNP helium environment.

Alternative (a) would make the design more expensive and could cause schedule delays to justify that additional allowances are adequate. Alternatives (b) and (c) would have major impact on plant economics. Alternative (d) involves uncertainties which

could impact cost and schedule. Alternative (e) increases the cost of the components significantly and for some components may be very difficult if not impossible to satisfy.

It is judged that performing the test and obtaining the material properties is the most practical and economic solution.

6. Schedule Requirements

A report that includes the compilation of the existing data base and comparison to ASME Code Subsection NH values is needed in the early stages of preliminary design. Interim results, as they become available, on all data are needed throughout preliminary design. Final results on all data are needed 12 months into final design for incorporation into the final design.

7. Priority

Urgency (1-5):	2
Cost-Benefit (L, M, H):	H
Uncertainty in Existing Data (L, M, H):	H
Importance of New Data (L, M, H):	H

8. Fallback Position and Consequences of Nonaccomplishment

The fallback position is Alternative (a). The consequences to the program of nonexecution would raise the level of risk associated with the SG design and could cause schedule delays.

DDN PCS-01-03 Helium Environment Effects on 800H

It is necessary to assess the effects of the NGNP environment to account for deterioration in service, if any, of the mechanical properties of steam generator tubing, plates and forgings fabricated from Alloy 800H material, with and without weldments, which operate at elevated temperature and which are exposed to the primary coolant chemistry.

1. Assumptions

Assumption 1: Exposure to primary coolant chemistry and temperature over design life does not significantly degrade the design properties of metals used in the steam generator.

Assumption 2: Exposure to primary coolant chemistry and temperature over design life does not significantly degrade the design properties of metals used in the steam generator.

Assumption 3: Creep fatigue damage rules in ASME Code Subsection NH for Alloy 800H are conservative.

Assumption 4: ASME Code Subsection NH allowables for the weldments of Alloy 800H are conservative.

Assumption 5: Operation in the elevated-temperature regime does not result in significant fatigue and creep crack growth for Alloy 800H.

2. Current Data Base Summary

The primary coolant contains impurities which may cause material corrosion in the form of oxidation, decarburization and carburization. At the design temperatures of operation of the Alloy 800H components, carbon transport has been shown to be the most potentially significant mode of corrosion with respect to bulk mechanical properties such as tensile and creep properties. In addition, surface oxidation along with concurrent carbon transport may significantly affect surface sensitive properties such as fatigue, creep fatigue and crack growth. Another factor that must be considered along with decarburization or carburization is the change in microstructure due to thermal aging.

Extensive data is available on the degree of carburization/decarburization and oxidation of Alloy 800H as a function of temperature, impurity levels, and exposure time in simulated HTGR primary coolant helium. Based on these data and the given impurity levels of the NGNP, and the temperatures of operation of steam generator components, carburization of Alloy 800H is expected to be minimal over the life of the plant.

The effect of impure helium environments on the creep rupture properties of Alloy 800H were evaluated for times exceeding 30,000 h. Comparative creep tests in air and in helium for the same heats of Alloy 800H were reviewed and except for two isolated data points obtained at 1400°F (760°C), all the data measured fall well within the scatter bands for air creep-rupture data.

Tests were performed on commercial heats of Alloy 800H thermally aged in the temperature range of 1000° to 1500°F (538° to 816°C) for times up to 30,000 h. Age-hardening was observed at 1000°, 1100° and 1200°F (538°, 593° and 649°C), resulting in increases in the yield and ultimate tensile strengths of the material with some reduction in ductility.

The presence of the HTGR helium environment had no discernible effect on the stress behavior during low-cycle fatigue, high-cycle fatigue or creep-fatigue testing performed on Alloy 800H to date. The low-cycle fatigue life at 1200°F (650°C) was significantly increased compared with that in air.

Fracture toughness data available to date indicate the room temperature tensile properties and CVN energy for this material aged 10,000 h at 593°C (1100°F) are significantly different than values for material aged for the same length of time at other temperatures. On the other hand, the J1c measured on material aged 10,000 h at 593°C (1100°F) is significantly lower than that measured on material aged for the same length of time at the other temperatures.

3. <u>Summary of Data Needed</u>

Data are needed to confirm that exposure to impure primary coolant (helium) at appropriate temperature does not reduce the selected design mechanical properties of Alloy 800H base metal and its weldments below the values of the ASME Code Subsection NH.

The organization performing the tests initially compiles a comparison of the data generated to date on this material, applicable to the NGNP service conditions, to the ASME Code Subsection NH values.

Limitations of the existing data and the recommendations for any additional data form part of this compilation report. Based on this report, for the selected properties for which it is judged that sufficient data are not available to make a good comparison or to reach a conclusion, materials testing is performed to generate additional data.

For the selected properties for which ASME Code Subsection NH data are not available (e.g., fracture mechanics data), the data generated need to be sufficient to have reasonable confidence level. Quality assurance must be in accordance with requirements for experimental data or validation testing for non-safety related components.

4. <u>Designer's Alternatives</u>

The alternatives are as follows:

a. Redesign to reduce stress and accommodate arbitrary allowance for changes in material properties.

b. Relocate, strengthen or insulate critical weldments.

c. Reduce helium temperature to limit environmental effects.

d. Modify helium gas chemistry to reduce environmental effects.

e. Use alternate base metal and weldments materials.

5. Selected Design Approach and Explanation

The selected design approach is to use Alloy 800H material for the finishing superheater tubes, tube support plates, shrouds, and steam outlet tubesheet. Experimental data is generated where necessary to confirm the stress/strain allowables in the ASME B&PV code can be used without modification for this material when exposed to the NGNP helium environment.

Alternative (a) would make the design more expensive and could result in schedule delays to justify the additional allowances are adequate. Alternatives (b) and (c) would have major impact on plant economics. Alternative (d) involves uncertainties which could impact cost and schedule. Alternative (e) increases the cost of the components significantly and for some components may be very difficult if not impossible to satisfy.

It is judged that performing the test and obtaining the material properties is the most practical and economic solution.

6. Schedule Requirements

A report that includes the compilation of the existing data base and comparison to ASME Code Subsection NH values is needed in the early stages of preliminary design. Interim results, as they become available, on all data are needed throughout preliminary design. Final results on all data are needed 12 months into final design for incorporation into the final design.

7. Priority

Urgency (1-5):	2
Cost-Benefit (L, M, H):	H
Uncertainty in Existing Data (L, M, H):	H
Importance of New Data (L, M, H):	H

8. Fallback Position and Consequences of Nonaccomplishment

The fallback position is Alternative (a). The consequences to the program of nonexecution would raise the level of risk associated with the SG design and could cause schedule delays.

DDN PCS-01-04 Acoustic Response of Helical Bundle

Acoustic vibrations generated by vortex shedding and flow separation from multiple tubes can be amplified by tuned resonant chambers. While the problem may manifest itself in the form of excessive noise levels, it may also lead to substantial structural damage to tubes, shrouds or thermal barrier surfaces of the heat exchanger and the primary coolant loop.

1. Assumptions

Assumption 1: Methods are developed for the timely prediction of acoustic loads within the primary coolant loop.

Assumption 2: Steam generator tube bundle/cavity does not generate excessive acoustic loads on the shrouds and thermal barrier surfaces.

Assumption 3: Steam generator tube bundle/cavity does not generate excessive acoustic loads on the shrouds and thermal barrier surfaces.

Assumption 4: Steam generator tube bundle/cavity does not generate excessive acoustic loads on the shrouds and thermal barrier surfaces.

2. Current Data Base Summary

Acoustic resonance in heat exchangers is a common cause of excessive noise and failure in tube and shell heat exchangers with gas on the shell side. Acoustic resonance has occurred in chemical process heat exchangers, in heat recovery boilers, in power plants, with finned tubes, with plain tubes, in spiral tube heat exchangers, and with both inline and staggered tube arrangements. A reliable and accurate method of predicting the magnitude of the acoustic resonance is not available at this time.

In order to design against acoustic resonance, it is necessary to predict the excitation frequency for a given tube array and ensure that it does not coincide with the acoustic natural frequency of the cavity. However, there is considerable controversy on the type of excitation mechanism against which comparison should be made.

The only acoustic vibration test results available for tube bundle geometry similar to the current design configuration were generated by Sulzer Brothers for the FSV steam generators. The conclusions of this testing were that the various acoustic vibrations occurred at or near the frequencies calculated, and that no distinct resonances with the vortex shedding frequencies were found, this being a major advantage of helical bundles over straight tube bundles.

3. Summary of Data Needed

The noise source level is characterized by a spectrum of acoustical power distributed over a frequency range. A major source of noise in the gas reactor systems is the circulator. Data is needed to investigate the effects of this noise on the large surface area structures of the heat exchanger, such as the flow shrouds, baffles, and thermal barriers, as a function of varying frequencies.

It is also necessary to measure the acoustical response of the heat exchanger tube bundle and cavity during simulated primary flow. Data is needed that produces representative frequency spectra and sound pressure levels generated by the helical tube bundle as a function of flow velocities and geometry variations. Quality assurance must be in accordance with the requirements for experimental data or validation testing for non-safety related components.

4. Designer's Alternatives

The alternatives are as follows:

a. Rely on analysis and avoid large resonant plates or other acoustically sensitive surfaces in the design.

5. Selected Design Approach and Explanation

The selected approach involves experimentally evaluating the geometry, flow conditions and sound levels in the helical tube bundle that could result in acoustic resonance. A model test is proposed for this purpose. The model is designed so that the bundle geometry can be varied. The sound produced by flow through the test model as a function of bundle geometry and flow velocity is measured. Also measured is the response of the bundle and the cavity to the sound pressure levels generated by the circulator.

The steam generator design incorporates shrouds, flow baffles and/or shields, and thermal barriers which may be acoustically sensitive. Theoretical analysis by itself is not considered adequate for a complex geometry such as the helical tube bundle (Alternative a) and experiments are therefore necessary.

6. Schedule Requirements

Data are needed by start of final design.

7. Priority

Urgency (1-5):	2
Cost-Benefit (L, M, H):	M
Uncertainty in Existing Data (L, M, H):	M
Importance of New Data (L, M, H):	M

8. Fallback Position and Consequences of Nonaccomplishment

The fallback position is Alternative (a). The consequences of nonaccomplishment to the program could involve design modifications.

DDN PCS-01-05 Large Helical Coil Fabrication Test

Determine the feasibility of coiling and threading multiple tubes in concentric coils through holes in full and partial support plates. Concerns are: clearances between tube and plate; wear protection device installation; tolerances; and fabrication time.

1. Assumptions

Assumption 1: The method of manufacturing of a helical coil bundle with drilled radial tube support plates is verified.

2. Current Data Base Summary

Several full-scale fabrication tests and production bundles have demonstrated the coiling and threading of tubes through similar support structures. However, the assembly has been demonstrated on tube bundles of smaller diameters, with a fewer number of coils, shorter tube lengths, and fewer number of tubes than for the NGNP. The differences in these parameters, in addition to the differences in the details of the support structure and the shroud structure, create a concern over the applicability of the current data base to the NGNP Steam Generator design. Aside from the differences, the data base provides useful information in defining a test program.

3. Summary of Data Needed

The data needed from the performance of this test are to demonstrate the fabrication of a large helical bundle and to provide input for fabrication procedures and sequence. Quality assurance must be in accordance with the requirements for experimental data or validation testing for non-safety related components.

4. Designer's Alternatives

The alternatives are as follows:

a. Extrapolate data base parameters and information to current design.
b. Arbitrarily increase fabrication time to allow for unknowns and potential problem areas.

5. Selected Design Approach and Explanation

The selected approach involves coiling and threading a number of selected tubes into a full-scale, drilled plate support structure. Tubes are selected to fully represent the spectrum of coiling and threading possibilities.

This selection is based upon utilization of the helical bundle supported by solid, drilled plates. The helical bundle is the most compact heat exchanger design for this application and the solid, drilled plate support system appears to best satisfy the requirements of thermal expansion and seismic load paths. Adaptation of the data base poses questions of applicability because of the many differences in bundle parameters. Arbitrarily increasing the fabrication schedule to allow for unknowns and learning would directly and adversely affect the cost as well as the "real" schedule.

6. Schedule Requirements

Data are needed prior to the start of steam generator fabrication.

7. Priority

Urgency (1-5):	2
Cost-Benefit (L, M, H):	H
Uncertainty in Existing Data (L, M, H):	M
Importance of New Data (L, M, H):	H

8. Fallback Position and Consequences of Nonaccomplishment

The fallback position should only consider an extrapolation and adaptation of the current data base or arbitrarily increasing the fabrication span.

The consequences of nonexecution of this test leave a concern of the fabrication procedures for a large helical coil bundle. Proceeding with the current design, but without fabrication testing, would likely result in increased costs and an increased fabrication schedule.

DDN PCS-01-06 Inlet Flow Distribution

Knowledge of the magnitude and location of hot/cold streaks and velocity distribution of the primary coolant flow entering the FSH tube bundle is needed. The presence of hot/cold streaks causes temperature stratification. It may be necessary to reduce such stratification which may require mixing in order to preserve selected temperature constraints chosen for the BMW. Analytical methods, such as flow distribution codes, are available for predicting the flow field that can be realized for a given geometric configuration and inlet conditions. Experimental data exists on the hydraulic resistance of screens and baffles.

1. Assumptions

Assumption 1: Peak/average helium velocity ratio is 1.10 at entrance to the FSH tube bundle.

Assumption 2: Test data is available for the timely prediction of flow distribution at the entrance to the steam generator tube bundle.

Assumption 3: BMW and Alloy 800H tubing downstream must not be wetted during steady state conditions.

Assumption 4: 28°C superheat is acceptable for BMW and Alloy 800H downstream during steady state conditions.

Assumption 5: A BMW tube wall temperature less than or equal to 900°F is acceptable.

Assumption 6: BMW and Alloy 800H tubing downstream must not be wetted during steady state conditions.

Assumption 7: 50° superheat is acceptable for BMW and Alloy 800H downstream during steady state conditions.

Assumption 8: A BMW tube wall temperature less than or equal to 480°C is acceptable.

2. Current Data Base Summary

Analytical methods such as flow distribution codes, are available for predicting the flow field that can be realized for a given geometric configuration and inlet conditions. Experimental data exists on the hydraulic resistance of screens and baffles.

3. Summary of Data Needed

The barometric pressure, the ambient temperature, and the flow rate are needed. The velocity, temperature and static pressure profiles measured circumferentially and radially at the following cross sections;

a. The hot duct inlet.

b. The hot duct exit (upstream of the 90° elbow).

c. The exit of the 90° elbow.

d. The exit of the conical diffuser.

e. The inlet to the FSH tube bundle.

f. At a cross section in the FSH tube bundle or equivalent resistance.

The above data is generated in conjunction with Flow-Induced Vibration data needs. Quality assurance must be in accordance with the requirements for experimental data or validation testing for non-safety related components.

4. Designer's Alternatives

The alternatives are as follows:

a. Rely solely on analytical methods (flow distribution codes) and utilize the available experimental data on the hydraulic resistance of screens and baffles.

b. Utilize one or two perforated plates with a very high resistance just upstream of the FSH tube bundle to assure that the velocity maldistribution is corrected to reduce the temperature stratification.

5. Selected Design Approach and Explanation

The selected design approach is to perform the air flow distribution test to determine the primary coolant velocity, temperature and static pressure profiles and the location of flow distribution devices which yield the required radial and circumferential velocity and temperature profiles at the steam generator tube bundle inlet.

Alternative (a) involves uncertainty in meeting the BMW temperature constraints and uncertainty in determining the tube side orifice requirements which, in turn, translates into uncertainty in specifying the feedwater pressure.

Alternative (b) may result in high FW pressure and pressure loss which in turn affects the BOP.

It is judged that performing the test is technically prudent to support the plant design.

6. Schedule Requirements

Final test data are needed before the end of the preliminary design phase to remove uncertainties in the design.

7. Priority

Urgency (1-5):	1
Cost-Benefit (L, M, H):	H
Uncertainty in Existing Data (L, M, H):	H
Importance of New Data (L, M, H):	H

8. Fallback Position and Consequences of Nonaccomplishment

The fallback position is Alternative (a). The consequences of nonexecution would involve possible modifications to plant operation in order to maintain current limits on operation conditions.

DDN PCS-01-07 Insulation Verification Test

Thermal and mechanical performance of the insulation located in the active flow region (i.e., helium inlet plenum and outer shroud) of the steam generator needs to be verified. The concerns are the possibility of insulation becoming loose during operation and blocking helium flow areas and the difficulty with accessibility for maintenance or alteration once the steam generator is installed.

1. Assumptions

Assumption 1: Thermal and mechanical performance of the insulation(s) is (are) adequate.

2. Current Data Summary

A considerable amount of literature is available relative to high temperature insulation physical and thermophysical properties. A variety of insulations are available in special forms to meet specific service requirements.

3. Summary of Data Needed

Physical and operational characteristics of insulation are required. Specific data needed would be relative to thermal cycling of fibrous insulation, effects of mechanical and acoustic vibrations, and effects of flow and thermal gradients. These tests produce temperature data for certain critical components of the steam generator and verify the proposed thermal barrier for the life of the plant. Additional test data relative to any destructive impact on insulation due to vibrations and sliding contacting surfaces, as needed, would be obtained.

Quality assurance must be in accordance with the requirements for experimental data or validation testing for non-safety related components.

4. Designer's Alternatives

a. Rely on manufacturer insulation specification for mechanical performance.

5. Selected Design Approach and Explanation

The selected design approach is to perform testing of different critical regions under simulated environment conditions. Thermal performance of the insulation can be obtained by analysis; however, analysis alone is not sufficient to assure the mechanical performance of the insulation.

Performing the described tests is the only way of checking the mechanical performance of the insulation.

6 Schedule Requirements

Data is needed one year into the final design phase.

7. Priority

Urgency (1-5):	3
Cost-Benefit (L, M, H):	H
Uncertainty in Existing Data (L, M, H):	M
Importance of New Data (L, M, H):	H

8. Fallback Position and Consequences of Nonaccomplishment

The fallback positions would be to rely on Alternate (a). The insulation system has to be redesigned to avoid areas of high vibration and acoustic loads. The consequences of this on the program would be the possibility of failure of the insulation resulting in lower thermal performance and possible damage to the steam generator and/or heat transport system.

DDN PCS-01-08 Fretting & Sliding Wear Protection Tests

The wear protection method for the steam generator tubes, which are in direct contact with the drilled support plates or other support structures, is of concern in the present design of the NGNP tube bundle.

In the present design, a tube retention and wear protection device (TRD) is mechanically attached to the tube at each location where a tube passes through a support. In order to alleviate thermal interaction stresses, the tubes are loosely held in the supports by providing a small clearance between the TRD and the supports. This may result in impact and fretting wear of the TRD due to the flow induced vibration. Vortex shedding and/or turbulence are the major flow mechanisms which can contribute to the fretting wear of the TRD.

1. Assumptions

Assumption 1: Vibrational wear and sliding wear protection methods are verified.

2. Current Data Base Summary

In December 1989 a review of the fretting and wear technology was performed (under Subtask 6 of WBS 1713.2 Steam Generator Design Support). The review encompassed the majority of the experimental and analytical work performed at General Atomics and some of the important work done by Sulzer Bros., Central Electricity Research Laboratories (England), and Atomic Energy of Canada. A separate report was to be issued to summarize the fretting and wear technology review.

Based on the review, it appears that the necessary fretting and impact wear rate data exists. Also, many analytical models which use the wear rate data to predict the long term wear also are available. However, the fretting wear prediction analysis is not an exact science so the difference between predicted and actual wear may be significant. The analytical models are typically used to qualitatively examine the relative influence of the various parameters expressed in the equations such as frequency, clearance, impact forces, sliding distance, wear rate, vibration amplitude, and coefficient of friction.

3. Summary of Data Needed

A significant amount of fretting and impact wear rate data exists and different wear prediction models are available. However, the applicability of the usable data and verified, workable models to analyze the TRD for the NGNP steam generators for wear are marginal.

A testing program is needed to validate the use of existing wear rate data and wear prediction models for the TRD design. The purpose of the proposed test program is not to generate additional wear rate data, but to demonstrate that the existing TRD design is conservative and that it protects the tube for the design life of the plant.

Quality assurance must be in accordance with the requirements for experimental data or validation testing for non-safety related components.

4. Designer's Alternatives

a. Utilize the existing vibrational fretting wear and sliding wear data.

5. Selected Design Approach and Explanation

The selected approach is to conduct accelerated impact/fretting wear testing under prototypical geometrical and environmental conditions using prototypical tube dynamics.

Prior to initiating testing, a simple but conservative mechanistic model for tube fretting and wear prediction is developed. This model is validated by comparing the analytical results with the test results. The development of a complex model which simulates the time dependent motion of the helical tube and accounts for all nonlinearities (such as friction, impact forces, uneven clearances and sliding distance) would not be within the scope of this DDN.

Alternative (a) data were not generated using prototypical TRD geometry of tube dynamics (frequency, clearance, vibration amplitude, and normal impact force) and it is therefore difficult to assess the degree of conservatism or nonconservatism in the design of the TRD.

6. Schedule Requirements

The data are required prior to the completion of preliminary design.

7. Priority

Urgency (1-5):	2
Cost-Benefit (L, M, H):	H
Uncertainty in Existing Data (L, M, H):	M
Importance of New Data (L, M, H):	M

8. Fallback Position and Consequences of Nonaccomplishment

The fallback position is to use the existing fretting and wear data.

The consequences of non-execution of this test program could potentially result in an overly conservative design of the TRD which may significantly increase the cost of the steam generator. Should a non-conservative design emerge, it has the potential consequence of affecting steam generator performance and possibly steam generator life.

DDN PCS-01-09 Tube Wear Protection Device Testing

Tubes in the NGNP steam generator are supported by drilled plates which are in direct contact with the tubes. Currently, a baseline design of the tube retention and wear protection (TRD) device exists; however, there is some degree of uncertainty regarding its ability to perform the desired functions at the hot end of the tube bundle. This, coupled with the potential complexities of installation and the added cost of the TRD device, indicates a need for a better and simpler design and efficient installation tooling.

1. Assumptions

Assumption 1: Vibrational wear and sliding wear protection methods are verified.

2. Current Data Base Summary

The functions of the wear protection device in the current steam generator design are: to suffice as a manufacturing shim; to afford a sacrificial wear material; to provide vibration damping by providing a controlled clearance between the tube and plate; and to transmit seismic loads from the tube to the radial support plates.

A sleeve and wedge type wear protection assembly was used in FSV and THTR designs. The FSV design consists of one piece sleeve and one piece wedge, with both having interlocking machined grooves to prevent their separation. The sleeve has one through length cut which offers extra flexibility without sacrificing the close fit. Both pieces have no hard facing coating for added wear protection. The THTR design consists of a one-piece sleeve and three-piece wedge, and the mating surfaces are taper machined. The ferritic parts are nitrided and 800H parts are chromium carbide coated.

Both of the above designs are believed to be only marginally applicable for NGNP steam generator tube protection. The FSV design was used with a relatively thin support plate (3/4” FSV Support Plate versus 1-l/2 in. NGNP support plate). The THTR design is complex, involving more machining.

3. Summary of Data Needed

Data are needed to confirm the adequacy of the selected wear protection device to perform the design functions throughout the design life of the plant and the ease of installation. Quality assurance must be in accordance with the requirements for experimental data or validation testing for non-safety related components.

4. Designer’s Alternatives

The alternatives are as follows:

a. Do not test. Rely on the designs of Fort St. Vrain and THTR for tube wear protection devices.

b. Develop alternate tube bundle support designs that do not require wear protection devices.

5. Selected Design Approach and Explanation

The selected approach is to design and test the wear protection device or devices that have been chosen as a result of engineering trade studies. These tests provide confidence that the TRD performs the desired functions through the life of the plant.

Alternate (a) was not chosen because it was not felt that analysis alone could adequately address all of the concerns. In addition, testing of the devices used in Fort St. Vrain steam generators have shown them to relax their pre-load on the tubes after some period of time.

Alternate (b) involves very detailed and costly trade studies, and the alternate tube bundle support method could potentially introduce new concerns in the design of the NGNP steam generator.

6. Schedule Requirements

The results are to be obtained prior to completion of preliminary design.

7. Priority

Urgency (1-5):	2
Cost-Benefit (L, M, H):	H
Uncertainty in Existing Data (L, M, H):	H
Importance of New Data (L, M, H):	H

8. Fallback Position and Consequences of Nonaccomplishment

The fallback position is Alternative (a). This could potentially result in a complex, expensive and unproven TRD design, and reduced steam generator reliability.

DDN PCS-01-10 Shroud Seal Test

The reference MHTR steam generator design incorporates four different types of seals to prevent the hot helium from by-passing the tube bundle. Two types are of unique designs which warrant testing to validate these design features. The radial or annular seals and the linear seals which control bypass flow around the tube bundle are to be tested. The performance and design feasibility of these seals are confirmed.

1. Assumptions

Assumption 1: Thermal and mechanical performance of the seals are adequate.

2. Current Data Base Summary

Listed below are the types of seal designs considered for different seal locations:

I. Piston rings, which allow axial sliding of mating components

II. Metal bellows, which allow low-stress axial thermal growth

III. Radial or annular seals which allow radial mismatch in displacement of mating components.

a. Fabricated metal radial expansion seal
b. Custom fabricated packing made from ceramic or graphite braided rope, or hybrid ceramic/Inconel, graphite/Inconel braided rope
c. A combination of custom fabricated packing and fabricated metal radial expansion seal

IV. Sealing between linear surfaces

a. Custom fabricated packing made from ceramic braided rope, Inconel braided rope, or hybrid ceramic/Inconel braided rope.
b. Metal "E" seal

The above first two types of seals are industry standard designs for static seals (no rotating components). However, most of these standard designs are for high pressure, low temperature and small diameter applications. Adopting any standard design for steam generator applications for large diameter high temperature (255° to 705°C) and small differential pressure (20 to 100 kPa) requires careful considerations.

Based on the vendor's responses, Type III and IV seal designs require testing to confirm design assumptions. These two types are located in the steam generator to control bypass helium flow around or through the floating shrouds.

3. Summary of Data Needed

The designs of fabricated packing, fabricated metal seal, and metal "E" seal require developmental testing which:

a. Confirm the design feasibility prior to completion of preliminary design.

b. Measure performance, mainly leak rates, under prototypical operating conditions.

c. Measure the influence of the following factors on the seal performance.

d. Surface finish of the mating components

e. Flatness of the mating surfaces

f. Differential pressure across seals

g. Seating load which is applied with springs

h. Size, spacing, and ratings of the compression springs

4. Designer's Alternatives

The need for the proposed testing arises primarily due to the inner and outer floating shrouds. The purpose of the floating shroud is to control the bypass of helium flow around the tube bundle. Based on the responses from several vendors, configuration specific designs for axial and annular seals for the floating shrouds have to be verified through a combination of analysis and testing.

a. If the floating shrouds are used and confirmatory testing is not performed, more conservative allowances on heat transfer surface and tube design temperatures is necessary to account for the peripheral bypass effects.

b. Develop an alternate tube bundle design which eliminates the floating shrouds and still limit the desired helium bypass around the peripheral tubes.

c. Further investigate controlling the gas between the peripheral tubes and surrounding envelope by utilizing more stringent manufacturing tolerances.

5. Selected Design Approach and Explanation

The selected approach is to incorporate floating shrouds in the design and to perform tests using small sections (~1 m lengths) of seals of prototypical geometry and subject them to prototypical operating conditions, except the helium velocity, in a small test chamber. The performance test data is collected to measure the influence of the items described in the data needs section and to finalize the seal designs. The test results are also used in the steam generator performance analysis.

6 Schedule Requirements

The present steam generator design depends upon the use of floating shrouds in order to meet requirements. Incorporation of the floating shrouds into the final design phase requires confirmatory testing of the seals.

The test data are needed midway through preliminary design.

7. Priority

Urgency (1-5):	1
Cost-Benefit (L, M, H):	H
Uncertainty in Existing Data (L, M, H):	M
Importance of New Data (L, M, H):	H

8. Fallback Position and Consequences of Nonaccomplishment

Confirmatory testing of the seals should be performed prior to incorporating floating shrouds into the final design. The basic fallback position is design Alternative (b) which is to eliminate the floating shrouds. This fallback position adds uncertainty to steam generator performance and may result in a larger steam generator envelope and increased sensitivity to flow anomalies. The fallback positions (a) and (c) may impose unreasonable manufacturing tolerances and this fallback option introduces significant risk and uncertainty in the schedule.

DDN PCS-01-11 Lead-in/Lead-out/Transition/Expansion Loop Mockups

For those portions of each tube circuit not included in the helical bundle, data are needed to develop: spatial envelope; support configurations; thermal movement characteristics including as installed and operating clearances; and assembly sequence.

1 Assumptions

Assumption 1: Space allocated for the lead-in, lead-out and transition tubes is sufficient.

Assumption 2: Methods is available to accurately predict support locations in the expansion loop in order to provide adequate thermal expansion accommodation.

Assumption 3: Methods is available to adequately predict the support locations in the lead-out tubes and expansion loop so that adequate tube-to-tube clearances could be provided, and multiple tube interaction and wear could be avoided.

Assumption 4: Methods is available to accurately predict support locations in the lead-out tubes and expansion loop in order to prevent tube binding.

2. Current Database Summary

Previous experience with similar designs (FSV, THTR) gives some information on spatial requirements for assembly, welding, means of support, and wear protection. The information is very configuration dependent and generally not generic.

3. Summary of Data Needed

For the specific configuration of the NGNP, development of specific routing and support configurations is needed to confirm the adequacy of the spatial envelope and structural design. Testing via a mock-up of the non-helical portions of the tube bundle is needed to determine: Spatial envelope, characteristic thermal movements and interactions of tubes and supports, and the adequacy of clearances to avoid multiple tube interactions. Quality assurance must be in accordance with the requirements for experimental data or validation testing for non-safety related components.

4. Designer's Alternatives

The alternatives are as follows:

a. Do not perform mock-up test. Rely on design layout work and analysis including CAD, ANSYS (finite element), and Solids modeling as well as available FSV, THTR background.

b. Use less than prototypical (e.g., small scale plastic models) to partially satisfy data needs, i.e., spatial envelope and assembly sequence.

5. Selected Design Approach and Explanation

The selected approach is to perform a near full scale metallic mock-up of the non-helical portions of the tube bundle based on design layouts and analysis to be performed

in the preliminary design. Test results are an integral part of the completion of the preliminary design and confirm adequacy of spatial envelope and structural design.

Alternative (a) represents risk of later changes to spatial envelope and consequent impacts on overall Nuclear Island design. The design configuration differs significantly enough in layout and size (number of tubes) from FSV and THTR that direct application of experience is questionable.

Alternative (b) partially addresses the uncertainties of spatial envelope and assembly sequence, but has limited value for determining structural adequacy.

6. Schedule Requirements

The results are needed prior to the completion of the preliminary design.

7. Priority

Urgency (1-5):	2
Cost-Benefit (L, M, H):	M
Uncertainty in Existing Data (L, M, H):	M
Importance of New Data (L, M, H):	M

8. Fallback Position and Consequences of Nonaccomplishment

The fallback positions are Alternatives 1 and 2. Either alternative may lead to design schedule delays and design changes, and higher cost design/analysis iterations to arrive at a defensible final design.

DDN PCS-01-12 Flow Induced Vibration Testing of Helical Bundle

Flow induced vibrations are widely recognized as potentially major concerns in the design of modern tube and shell type heat exchangers. Fluid flowing across a tube array can cause dynamic instability. Should large-amplitude oscillations occur, severe damage to the tubes may result in a short time. Therefore, flow-induced vibration characteristics of the steam generator helical tube bundle, the lead-out tubes and transition tubes should be determined by test to verify the design and confirm the absence of such problems in service.

1. Assumptions

Assumption 1: Methods are developed and/or specific geometry dependent empirical constants are determined in order to accurately predict helium flow induced vibration mechanisms within the tube bundle and to avoid excessive tube vibrations.

Assumption 2: The semi-empirical models currently available to predict the onset of fluid-elastic instability are applicable to the helical tube bundle geometry.

2. Current Data Base Summary

Helical tube bundles differ in their geometry from tube bundles employing straight tubes. The main differences are the irregular and changing local tube array, caused by variations in the number of tubes and in the longitudinal pitch from one tube cylinder to another, the effect of the curvature and the slope of the tubes, variations in the natural frequencies of the adjacent tubes, and the cylindrical shape of the casing. Flow-induced vibrational analyses of helical bundles have typically been based on parameters obtained in tests with straight-tube bundles. The GAVEL Experiment performed by Sulzer in the late 1960's, however, involved tests of a full-size helical tube bundle, which represents a section of the FSV steam generator.

Flow induced excitation mechanisms can be broadly classified as:

a. Turbulent buffeting
b. Vortex shedding
c. Fluid-elastic instability
d. Acoustic resonance

Among these mechanisms, fluid-elastic instability is the excitation mechanism with the greatest potential for short term damage to heat exchangers, including those with helical tube bundles. In the current NGNP design, this mechanism controls the maximum allowable unsupported tube spans within the bundle. The models currently available to predict the onset of fluid-elastic instability are all semi-empirical. The original stability criterion was developed by Connors using the following relationship for the threshold velocity U_c beyond which fluid elastic instability occurs:

$$U_c/f_nD = K\,(m\eta/\varsigma D^2)^{1/2}$$

Where f_n is natural frequency, D is outside tube diameter, K is the fluid-elastic instability coefficient, m is mass of empty tube per linear unit, η is the logarithmic decrement associated with tube damping, and ς is fluid density. However, the coefficient K varies with specific array characteristics, fluid flow conditions, and all other parameters that can affect the instability. There is a significant scatter in the experimental data obtained by different investigators using straight tube models and values of coefficient K have been reported from 2.0 to 9.9. At the time the GAVEL Experiment was performed, fluid-elastic instability was not considered to be important, and tests concentrated on the vortex shedding phenomena. Later experimental data generated by Blevins, in which he varied the spacings between tubes and inclined alternate tube columns to simulate a counter-wound helical bundle, found the fluid-elastic instability to be an important consideration in these bundles and that the coefficient K could be as low as 1.7.

3. <u>Summary of Data Needed</u>

Data is needed in order to accurately determine the flow-induced vibration characteristics of the NGNP steam generator specific helical tube bundle, the lead-out tubes, and the transition tubes. The flow-induced excitation mechanisms of concern are turbulent buffeting, vortex shedding, and fluid-elastic instability, with the latter considered most important. The data generated should provide the essential information to the designer in order to accurately verify the response of the structure to the shell-side fluid flow conditions, especially the prediction of the threshold for fluid elastic instability. The model used in the tests should be able to accurately simulate the specific array characteristics, geometry and the shell-side fluid flow conditions of the NGNP steam generator. Quality assurance must be in accordance with the requirements for experimental data or validation testing for non-safety related components.

4. <u>Designer's Alternatives</u>

The alternative is as follows:

a. Rely on the existing information and data developed by various investigators based on the parameters obtained in tests with straight-tube bundles and, though limited, data on helical and/or simulated helical bundles, for analysis of the NGNP steam generator.

5. <u>Selected Design Approach and Explanation</u>

The selected approach involves flow-induced vibration testing of a representative model (or models) that simulates the specific array characteristics, geometry and shell-side fluid flow conditions of the NGNP steam generator. This model (or models) need only simulate the conditions at the hot end of the helical tube bundle, at the lead-out tubes, and the transition tubes, which are considered to be the most susceptible to the flow-induced vibration mechanisms of concern.

Alternative (a) would involve uncertainties in the design. The approach would of necessity be conservative due to the scatter in the parameters from existing test results.

6. Schedule Requirements

Interim results are needed before starting fabrication.

7. Priority

Urgency (1-5):	1
Cost-Benefit (L, M, H):	H
Uncertainty in Existing Data (L, M, H):	H
Importance of New Data (L, M, H):	H

8. Fallback Position and Consequences of Nonaccomplishment

The fallback position is Alternative (a). Non-execution may lead the designer to choose what he thinks is the most appropriately conservative correlation in the analyses, resulting in an over-conservative design. This could affect the overall envelope of the steam generator.

DDN PCS-01-13 Orifice Qualification Test

The lessons learned from earlier gas cooled reactors as well as the analyses performed on the NGNP steam generator indicate that orifices are required at the feedwater inlet to the tube bundle. This test provides data on pressure drop and performance of the orifice designs (including erosion/corrosion resistance) while confirming the design configuration in the areas of fabrication, tolerances, and assembly.

1. Assumptions

Assumption 1: Suitable orifices can be installed in the feedwater inlet to provide initial adjustment to obtain a balanced temperature distribution and to provide stable operational performance.

2. Current Data Base Summary

Prior HTGR steam generators have required initial startup adjustment of the resistance at the inlet to the tube bundle to balance the steam/water circuits.

3. Summary of Data Needed

Test data are needed to design and size the orifices which are used in the individual tube circuits. Data on pressure drop and performance (including erosion/corrosion resistance) of the orifice designs are needed. Tests confirm the configuration in areas of fabrication, tolerance and assembly. Quality assurance must be in accordance with the requirements for experimental data or validation testing for non-safety related components.

4. Designer's Alternatives

Utilize formulae and orifice data from existing sources which may not be directly applicable. The mounting and assembly techniques would be on a best effort basis.

5. Selected Design Approach and Explanation

The selected approach is to test actual orifice inserts which is incorporated into the design. The test program confirms the pressure drop expected from these orifices.

Orifice design is critical to the operation of the steam generators to provide stable operation and to protect the bimetallic welds from operating outside the prescribed temperature range.

6. Schedule Requirements

Test results are needed before the end of final design in order to finalize the steam generator design.

7. Priority

Urgency (1-5):	2
Cost-Benefit (L, M, H):	H
Uncertainty in Existing Data (L, M, H):	M
Importance of New Data (L, M, H):	M

8. Fallback Position and Consequences of Nonaccomplishment

The fallback position is to use data from theoretical or vendor sources which may not be the same as for the NGNP design. The effects of tolerance and assembly would not be fully known.

The consequences of non-execution of this test program would place at risk the ability to provide adequate pressure drop for the inlet feedwater.

DDN PCS-01-14 Instrumentation Attachment Test

The lessons learned from earlier gas cooled reactors indicate that temperature measurements are required at various locations within the tube bundle. The Instrumentation Requirements Study completed for the NGNP recommended that measurements be made for gas temperature, steam/tube temperature, and structural considerations of stress, strain, and acceleration for first-of-a-kind (FOAK) instrumentation. Instrumentation is required to obtain input for the Reactor Protection System, Investment Protection System, and Plant Control, Data and Instrumentation System.

A testing program is needed to obtain data to be used in designing and installing the necessary instrumentation for operation of the NGNP steam generators. This includes steam generator performance instrumentation and those required by the control system, both of which are required for the lifetime of the unit. It also includes FOAK instrumentation which need only last for the early stages of the steam generator lifetime. Mockups are needed to confirm both the design and installation techniques for critical instrumentation as well as to confirm the ability for removal and replacement for lifetime instrumentation.

1. Assumptions

Assumption 1: Instrumentation, particularly for the FOAK unit, is needed to confirm SG performance predictions implicit in the evaluation models. Instrumentation can be installed in critical high temperature locations within the steam generators and such instrumentation is reliable with long-term integrity. Some instrumentation must be removable in order to be replaced in the event that it is rendered inoperable.

2. Current Data Base Summary

Prior HTGR steam generators have required instrumentation.

AGR – one of four steam generators in the first reactor at each site was extensively instrumented for measurements of vibrations and strains. Thermocouples were installed in all steam generators.

THTR – The internal instrumentation consisted of 71 thermocouples; 21 were for gas temperatures around the tubes and 50 were for steam/water temperatures inside the tubes. Accelerometers and strain gages were considered not to be reliable enough and they were not included.

FSV – The instrumentation was extensive and is difficult to summarize. There were 13 units (steam generators) built, one of which was fully instrumented with 116 thermocouples while the standard units had 24 thermocouples. One unit had 70 strain gages for vibration data. Five units had additional thermocouples to provide gas temperatures and superheater temperature distribution.

3. Summary of Data Needed

Test data are needed for use in designing and installing into the steam generators the appropriate instrumentation for reliable operation of the units. Mockups confirm the

designs and assembly techniques for critical instrumentation. The ease of removal and replacement must be in accordance with the requirements for experimental data or validation testing for non-safety related components.

4. Designer's Alternatives

Utilize previous designs which may not be suitable for the new NGNP design.

5. Selected Design Approach and Explanation

The selected approach is to use mockups to replicate the internal surfaces where instrumentation is required. The design and assembly techniques are used on representative surfaces.

6. Schedule Requirements

Test results are needed early in final design in order to finalize the steam generator design and to be used in interfaces with instrumentation organizations. The expected designs for instrumentation are expected to be incorporated into component test plans to determine their effects on gas flow distribution where critical.

7. Priority

Urgency (1-5):	2
Cost-Benefit (L, M, H):	M
Uncertainty in Existing Data (L, M, H):	M
Importance of New Data (L, M, H):	M

8. Fallback Position and Consequences of Nonaccomplishment

The fallback position is to use data from earlier designs which are not the same as the NGNP design.

The consequences of nonexecution of this program would place at risk the ability to provide adequate instrumentation for the NGNP steam generator for either FOAK or NOAK units. Performance of the units would have to be evaluated on the basis of the resulting instrumentation.

DDN PCS-01-15 Bi-Metallic Weld Structural Integrity

The Steam Generator tube bundle design incorporates BMWs between the Alloy 800H Finishing Superheater (FSH) tubing and the 2 ¼ Cr-1Mo Evaporator/Economizer/Superheater (EES) tubing.

The existing service data base for BMWs between 2 ¼ Cr-1Mo and austenitic stainless steel with nickel based fillers has been used to establish an upper limit temperature criterion for BMW operation of 480° C. Data are needed to confirm the adequacy of the upper temperature limit of 480 ^{o} C and the creep-fatigue properties of the BMW and to verify the adequacy of design analysis methods.

1. Assumptions

Assumption 1: No metallurgical changes occur within the design life of the BMW to compromise the creep and fatigue capabilities of the weldments and that the existing service data base and analysis methods can be used to confirm the creep-fatigue capability of the welds.

2. Current Data Base Summary

Experience with superheater and reheater BMWs in fossil-fired power plants has indicated that at temperatures above 565°C the creep-fatigue capabilities of the weldments can be compromised by the growth of large carbides at the weld/ferritic steel interface in such weldments. Data are needed to confirm the adequacy of the temperature margin in the design and to confirm the fatigue strength of the welds at the lower temperatures using prototypical tubes, tube materials, weld filler materials, and operating conditions.

3. Summary of Data Needed

Data are needed to confirm the structural integrity of the BMWs: 1. Between the Alloy 800H finishing superheater (FS) tubing and the 2 ¼ Cr-1Mo Evaporator/Economizer/Superheater (EES) tubing. Testing should be performed to confirm that, up to the design temperature limit of 480 ^{o}C, no metallurgical changes occur within the design life to compromise the creep and fatigue capabilities of the weldments. Testing should establish fatigue damage as a function of loading conditions and temperature, as well as inclusion of hold times to assess creep-fatigue interaction at these temperatures and loadings.

The data are required to extend the database from fossil-fired power plant service and testing to NGNP conditions. The conditions set by the NGNP design are currently much less severe (but are outside the range studied) than those in the fossil-fired applications. However, life prediction methods developed for the fossil-fired application, when directly extrapolated to NGNP conditions, suggest that fatigue capability could place severe restrictions on the service loads which could be applied to the BMW.

Methods for design analysis should be applied to test conditions and results to verify the applicability of such demands.

There is an additional factor (which should be advantageous to the NGNP design) in that the austenitic base metal used in the NGNP is Alloy 800H rather than 300-series

stainless steel, as in the fossil-fired application. Confirmation that this difference is not detrimental, but favorable is also required.

Quality assurance must be in accordance with the requirements for experimental data or validation testing for non-safety related components.

4. Designer's Alternatives

If the data are not generated, alternative strategies to maximize structural integrity margin are:

a. Ensure that the loads on the weld are limited to very low values.
b. Use a single low-alloy steel material throughout the steam generator tubing and tubesheet (this would avoid BMW altogether).
c. Use a single high-alloy steel material throughout the steam generator tubing.

Alternative (a) is acceptable but is considered to be unnecessarily restrictive, alternative (b) would require the temperatures of the primary and secondary coolants to be lowered, thereby significantly impacting the overall system design and performance, alternative (c) increases the stress corrosion cracking risk associated with using high-alloy material for long-term operation in the evaporator region of a once-through steam generator.

5. Selected Design Approach and Explanation

Proceed with bimetallic design and use the existing data base for preliminary design. Confirm the criteria by performing tests.

6. Schedule Requirements

Complete testing and analysis verification in time for inclusion of the results in final design and analysis.

7. Priority

Urgency (1-5):	2
Cost-Benefit (L, M, H):	M
Uncertainty in Existing Data (L, M, H):	M
Importance of New Data (L, M, H):	M

8. Fallback Position and Consequences of Nonaccomplishment

The fallback position is alternative (a). Other alternatives impact the NGNP system design. The consequence of nonexecution would involve highly restricted design configuration and the non-acceptance of the design. The ultimate effect could be a risk on plant operation parameter limitation.

DDN PCS-01-16 Helical Bundle and Transition Region Heat Transfer Test

Data are needed to confirm the shell and tube side heat transfer characteristics and shell side flow resistance of the helical tube bundle and transition region. Shell side helium heat transfer coefficients are needed:

a. In the transition region where the flow emerges from the finishing superheater and impinges on the straight vertical tubes and bimetallic weld, and
b. For the first few tube rows of the EES and within the EES. Both the average coefficient and the distribution as a function of the circumferential angle around the tube are needed. In addition, the effective flow resistance of the tube bundle which accounts for the variation from a square pitch to a staggered pitch is needed.

The steam generator tube temperatures are sensitive to local heat transfer coefficients. Shell heat transfer coefficients can be sensitive to local variations in flow geometry and flow resistance. These individual heat transfer coefficients, or "hot spot factors" must be known in order to adequately identify the tube temperatures in the tube bundle, particularly the EES where the temperature allowables are more critical. Adequately identifying the tube bundle flow resistances is also required to determine steam generator pressure drop.

1. Assumptions

Assumption 1: The heat transfer coefficient in the transition region is for established axial flow along straight parallel tubes. No hot spot factors are considered.

Assumption 2: A hot spot (maximum to average) factor of 1.35 is used at the entrance to the FSH and the EES for the helium heat transfer coefficient. This value is based on test data which was obtained for the Fort St. Vrain Steam generator. Data reported in the literature indicates cases where this factor was higher.

Assumption 3: The helium heat transfer coefficient which has been used for the FSH and EES bundle entrance regions was the average bundle helium heat transfer coefficient. The helium heat transfer coefficient at the entrance to the FSH and the EES can be as low as 64% of the average bundle helium heat transfer coefficient. Reduced helium heat transfer coefficients for the entrance region of the EES are now being used in the current evaluations.

Assumption 4: The pressure drop across the tube bundle can be determined by an average friction coefficient for cross flow of gasses over tube banks which have been reported in the literature for square and triangular pitch tube bundles. The FSH and EES tube bundles have a variable pitch which changes from a square pitch to a staggered pitch.

2. Current Data Base Summary

Analysis is available in the open literature and limited test data. e.g., Fort St. Vrain.

3. Summary of Data Needed

a. Heat transfer coefficients on the outside of tubes in the transition region from cross flow in a helical tube bundle to axial flow along parallel straight tubes.
b. Heat transfer coefficient circumferential variation around the outside of a tube at the entrance region of a helical tube bundle.
c. Average heat transfer coefficients on the outside of tubes for the entrance region of a helical tube bundle.
d. Tube bundle friction factors for tube bundles with variation from a square pitch to a staggered pitch.

Quality assurance must be in accordance with the requirements for experimental data or validation testing for non-safety related components.

4. Designer's Alternatives

The alternative is to rely solely on analytical methods utilizing the available experimental data.

5. Selected Design Approach and Explanation

The selected design approach is to perform heat transfer and flow resistance tests utilizing full-scale and sector models to yield the required data.

It is judged that performing the test minimizes conservatism to support the plant design.

6. Schedule Requirements

Test results are needed by (TBD).

7. Priority

Urgency (1-5):	3
Cost-Benefit (L, M, H):	M
Uncertainty in Existing Data (L, M, H):	M
Importance of New Data (L, M, H):	M

8. Fallback Position and Consequences of Nonaccomplishment

Excessive margin may be required in order to meet performance requirements.

DDN PCS-01-17 Tubing Inspection Methods and Equipment Design

The tubing and welds in the NGNP steam generator tube circuits must be capable of being inspected to provide safe and reliable operation of the units with high availability. The helical tubes are different from existing PWR steam generator tubes in three major areas:

a. The helical tubes are much longer, with more bends than the PWR U-tubes. There are longer, more torturous lengths of tubes to be inspected.
b. The NGNP SG tube materials are different from PWR SG tube materials and there is a transition from one tube material to another within each tube circuit, made by dissimilar metal butt welding. There are also several similar metal butt welds in each tube circuit
c. The NGNP SG tubing is 2 to 3 times thicker than PWR SG tubing.

The effort of this DDN provides data on the ability to deliver and recover a Non-Destruction Examination (NDE) probe the full length of the steam generator tubes, and the sensitivity of that equipment to detect tubing flaws. In addition, the choice of either Eddy Current (ECT) or Ultrasonic Testing (UT) is made.

1. Assumptions

Assumption 1: Inspection of the steam generator tubing is possible. Adequate radius of the necessary tube bends allows passage of an inspection probe. In addition, the Inside Diameter (ID) of the tube is large enough to allow suitable probe passage and the wall thickness does not preclude acceptable sensitivity of the testing equipment.

2. Current Data Base Summary

Previous testing experience by Babcock & Wilcox and Southwest Research Institute indicates that helical steam generator tubing can be effectively inspected.

3. Summary of Data Needed

Test data are needed first to guarantee the capability, and secondly, inspection sensitivity. From this a testing program can be developed which is compatible with outage times and the necessary NDE requirements.

Quality assurance must be in accordance with requirements for experimental data or validation testing for non-safety related components.

4. Designer's Alternatives

Utilize data from previous tests and developmental progress. Design the steam generator tubing bends to that criteria. Defer testing until baseline testing is to be done at the site.

5. Selected Design Approach and Explanation

The selected approach is to test with representative probes and NDE equipment of representative tubing coils and lead-in and lead-out tubing. The test program confirms the ability to conduct tubing NDE.

NDE is critical to the operation of the steam generators. Detection of degradation allows the operator to assess certain operating practices, and possibly preclude catastrophic tube failures.

6. Schedule Requirements

Initial test results are needed before the end of the final design in order to firm up the steam generator design.

7. Priority

Urgency (1-5):	3
Cost-Benefit (L, M, H):	H
Uncertainty in Existing Data (L, M, H):	M
Importance of New Data (L, M, H):	M

8. Fallback Position and Consequences of Nonaccomplishment

The fallback position is to use data from previous testing which may not be the same as for the NGNP design. Conservative estimates would have to be made for NDE sensitivity and tube inspection times.

The consequences of nonexecution of the test would place at risk the ability to provide adequate NDE capability for the steam generator tubing.

DDN PCS-01-18 Review and Reassemble Existing SG Development Data Base

The design data needs identified during the various MHTGR program [8-4]are the basis for the DDN's included here in paragraphs 8.3.1 through 8.3.17. Some progress was made in satisfying these needs in the early 90's during the NP-MHTGR program. In the current NGNP application where a steam generator is included in the secondary loop, a configuration similar to the MHTGR arrangement is envisioned. In order to establish an appropriate baseline for the NGNP application, it is important to revisit the existing SG development data base in the current context to calibrate the DDN's and the approaches to resolution. The proposed review and reassembly of the existing data base address this general need.

1. Assumptions

Assumption 1: The existing SG information based is available.

Assumption 2: The NGNP SG configuration context is conceptually similar to prior MHTGR applications but expected to somewhat in terms of design parameters, flow path arrangement and other aspects which have an influence on the details of approach to satisfying a particular need.

Assumption 3: Analysis and modeling technology has advanced significantly since the time frame of prior development activity and the approaches to satisfying some of the needs may be different and less dependent on testing.

2. Current Data Base Summary

See descriptions under individual DDN's.

3. Summary of Data Needed

See individual DDN's.

4. Designer's Alternatives

Proceed with programs to address DDN's without first revisiting the existing database.

5. Selected Design Approach and Explanation

The selected approach is to perform this activity in parallel with conceptual design of the SG for the NGNP application.

6. Schedule Requirements

Perform early in conceptual phase of SG design. Early timing is important to avoid attrition of knowledgeable technical resources.

7. Priority

Urgency (1-5):	1
Cost-Benefit (L, M, H):	H
Uncertainty in Existing Data (L, M, H):	M
Importance of New Data (L, M, H):	M

8. Fallback Position and Consequences of Nonaccomplishment

The fallback position is to proceed without a structured review and reassemble of prior development information.

The consequence of proceeding without establishing a baseline of information is a higher cost and longer duration SG development effort.

8.4 COMPLEXITY, RISK, AND FUTURE STUDIES

8.4.1 Complexity and Risks

The design basis for the PCS requires the use of conventional proven technology, as typically found in existing commercial power generation facilities. The complexity and risk associated with the PCS are minimal with the exception of the Steam Generator. The Steam Generator is a passive component but is located at the interface between the HTS and the PCS. If it is not available the entire plant must be shutdown, and decay heat removal via the PCS is not available. This component is the primary means to remove heat from the NHSS. If the turbine is not available the PCS can be operated in bypass mode for effective removal of decay heat from the NHSS.

8.4.2 Future Studies

Steam Generator Design Trade Study

It is recommended that a future study be conducted that will evaluate alternative approaches for the steam generator including more conventional designs (e.g., refractory lined, U tube) compared to the once through helical type SG proposed in the preconceptual design. Single vs. multiple trains will be evaluated. The results of the study will establish a path forward for design development of the steam generator.

Rankine Cycle Trade Study

Further engineering studies are recommended to optimize the Rankine Cycle configuration and performance in conceptual design. The study will assess costs and performance benefits of more efficient cycles with steam reheat vs. more simple and less costly but less efficient systems. The study will proceed in conjunction with the steam generator design trade study discussed above.

Design Basis Transient Study

An engineering study is recommended to identify and analyze transient cases that could effect the design requirements of the PCS with respect to ensuring safety of the Nuclear Heat Supply System (NHSS) and Heat Transport System (HTS). Demonstration cases and commercial configurations will be assessed, to ensure that the NHSS, HTS, and HPS function within the design basis envelopes through the assumed transient conditions.

8.5 REFERENCES

[8-1] Combustion Engineering, Inc., HTGR Steam Generator Subsystem Design Description, DOE-HTGR-86-129-Revision 1, HDF-42102-Revision 2, DOE Contract: DE-AC03-84SF11963, June 1987
[8-2] Technology Insights, NGNP and Hydrogen Production Preconceptual Design Report, Special Study 20.3: High Temperature Process Heat Transfer and Transport, Document No: NGNP-20-RPT-003-0 Dated: January 2007
[8-3] Technology Insights, NGNP and Hydrogen Production Preconceptual Design Report, Special Study 20.4: Power Conversion System, Document No: NGNP-20-RPT-004-0 Dated: January 2007
[8-4] CEGA-002781, Steam Generator Technical Development Status Report, 1993
[8-5] Thermoflow, Inc. Thermoflex Version 16.0.0
[8-6] Preconceptual Design Report Section 3
[8-7] ASME Boiler and Pressure Vessel Code VIII
[8-8] ANSI B31.1 Power Piping Code
[8-9] GE Energy, Steam Turbine Products Brochure
[8-10] ASHRAE American Society of Heating, Refrigeration and Air-Conditioning , Handbook of Fundamentals.
[8-11] PCDR Section 2 par. 2.2.1.4

LIST OF ASSUMPTIONS

Table 8-21: Heat Balance Assumptions

Steam Generator Assumptions	
8.1 Minimum Pinch	50°C Demonstration Facility / 40°C Commercial Facility

Rankine Cycle Assumptions	
8.2 Steam Generator pressure drop	5.5MPa based on the review of MHTGR, and THTR data January 1988 Time Frame (TBV)
8.3 Turbine Efficiencies	Assumed based on similar steam cycles
8.4 Main Steam pressure upstream of High Pressure Turbine throttle valve	16.55 MPa / 12.68 MPa
8.5 Main Steam temperature upstream of High Pressure Turbine throttle valve	565.6°C / 537.7°C
8.6 Main Steam Throttle valve loss (VWO)	2%
8.7 Main Steam line pressure drop	3%
8.8 LP steam line pressure drop	2%
8.9 Condenser Saturation Temperature	129°F (54°C) (Idaho Falls ASHRAE 1% dry bulb + 40°F)[8-10] The above condenser pressure is at design flow. It is assumed that the turbine design can tolerate the higher backpressure associated with full steam dump.
8.10 Ambient Temperature	Design Case 89°F (32°C) for summer design condition, Average condition for commercial operation is 59°F (15°C)
8.11 Pump Efficiencies	87%

APPENDICES

APPENDIX 8A TECHNICAL INFORMATION

None required.

APPENDIX 8B FINAL DESIGN REVIEW PRESENTATION TO BEA

See Section 6, Appendix 6A.

NGNP-09-RPT-001
Revision 0

May 2007

NGNP and Hydrogen Production Preconceptual Design Report

SECTION 9: BALANCE OF PLANT SYSTEMS

Revision 0

APPROVALS

Function	Printed Name and Signature	Date
Author	Peter D. Wells, P.E. Shaw, Environmental and Infrastructure, Inc.	May 24, 2007
Reviewer	Richard F. Gauthier, P.E. Shaw, Environmental and Infrastructure, Inc.	May 24, 2007
Approval	Edward J. Brabazon, P.E. Shaw, Environmental and Infrastructure, Inc.	May 24, 2007

Westinghouse Electric Company LLC
Nuclear Power Plants
Post Office Box 355
Pittsburgh, PA 15230-0355

©2007 Westinghouse Electric Company LLC
All Rights Reserved

LIST OF CONTRIBUTORS

Name and Organization	Date
Richard Pariseau Shaw E&I	May 2007
Jaime Basto Shaw E&I	May 2007
Robert Poltrino Shaw E&I	May 2007
Roy Case Shaw E&I	May 2007

BACKGROUND INTELLECTUAL PROPERTY

Section	Title	Description
NONE		NONE

REVISION HISTORY

RECORD OF CHANGES

Revision No.	Revision Made by	Description	Date
0	Peter D. Wells Shaw E&I	Initial Issue	May 24, 2007

DOCUMENT TRACEABILITY

Created to support the following Document(s)	Document Number	Revision
NGNP and Hydrogen Production Preconceptual Design Report	NGNP-01-RPT-001	0

TABLE OF CONTENTS

LIST OF TABLES **9-8**

LIST OF FIGURES **9-9**

9 BALANCE OF PLANT SYSTEMS **9-10**

SUMMARY AND CONCLUSIONS **9-10**

INTRODUCTION **9-11**

9.1 GENERAL OVERVIEW **9-12**

9.2 SYSTEMS **9-12**

9.2.1 PLANT CONTROL AND INSTRUMENTATION SYSTEMS **9-12**

9.2.1.1 Central Control and Supervisory System **9-12**

9.2.1.1.1 System Functions and Requirements 9-12
9.2.1.1.2 System Description 9-13
9.2.1.1.3 Major System Interfaces 9-13
9.2.1.1.4 System Operation 9-16

9.2.1.2 Radiation Monitoring System **9-16**

9.2.1.2.1 System Functions and Requirements 9-16
9.2.1.2.2 System Description 9-16
9.2.1.2.3 Major System Interfaces 9-17
9.2.1.2.4 System Operation 9-17

9.2.1.3 Plant Communication System **9-17**

9.2.1.3.1 System Functions and Requirements 9-17
9.2.1.3.2 System Description 9-17
9.2.1.3.3 Major System Interfaces 9-18
9.2.1.3.4 System Operation 9-18

9.2.1.4 Security System **9-19**

9.2.1.4.1 System Functions and Requirements 9-19
9.2.1.4.2 System Description 9-19
9.2.1.4.3 Major System Interfaces 9-20
9.2.1.4.4 System Operation 9-20

9.2.2 PLANT ELECTRICAL DISTRIBUTION SYSTEM **9-21**

9.2.2.1 System Functions and Requirements **9-21**
9.2.2.2 System Description **9-21**
9.2.2.3 Major System Interfaces **9-22**
9.2.2.4 System Operation **9-22**

9.2.3 PLANT WATER SYSTEM **9-23**

9.2.3.1 System Functions and Requirements **9-23**
9.2.3.2 System Description **9-23**
9.2.3.3 Major System Interfaces **9-23**
9.2.3.4 System Operation **9-23**

9.2.4 AUXILIARY COOLING (COMPONENT COOLING) WATER SYSTEM **9-24**

9.2.4.1 System Functions and Requirements **9-24**
9.2.4.2 System Description **9-24**
9.2.4.3 Major System Interfaces **9-25**

9.2.4.4 System Operation 9-25

9.2.5 POTABLE WATER SYSTEM 9-26
9.2.5.1 System Functions and Requirements 9-26
9.2.5.2 System Description 9-26
9.2.5.3 Major System Interfaces 9-26
9.2.5.4 System Operation 9-26

9.2.6 DEMINERALIZED WATER SYSTEM 9-27
9.2.6.1 System Functions and Requirements 9-27
9.2.6.2 System Description 9-27
9.2.6.3 Major System Interfaces 9-28
9.2.6.4 System Operation 9-28

9.2.7 CHILLED WATER SYSTEM 9-30
9.2.7.1 System Functions and Requirements 9-30
9.2.7.2 System Description 9-30
9.2.7.3 Major System Interfaces 9-30
9.2.7.4 System Operation 9-30

9.2.8 BOP HVAC SYSTEM 9-31
9.2.8.1 System Functions and Requirements 9-31
9.2.8.2 System Description 9-31
9.2.8.3 Major System Interfaces 9-33
9.2.8.4 System Operation 9-33

9.2.9 COMPRESSED AIR SYSTEM 9-34
9.2.9.1 System Functions and Requirements 9-34
9.2.9.2 System Description 9-34
9.2.9.3 Major System Interfaces 9-34
9.2.9.4 System Operation 9-35

9.2.10 EQUIPMENT HANDLING SYSTEM 9-36
9.2.10.1 System Functions and Requirements 9-36
9.2.10.2 System Description 9-36
9.2.10.3 Major System Interfaces 9-36
9.2.10.4 System Operation 9-36

9.2.11 DECONTAMINATION SYSTEM 9-37
9.2.11.1 System Functions and Requirements 9-37
9.2.11.2 System Description 9-37
9.2.11.3 Major System Interfaces 9-37
9.2.11.4 System Operation 9-38

9.2.12 WASTE HANDLING SYSTEMS 9-39
9.2.12.1 Solid and Condensed Waste Handling System 9-39
9.2.12.1.1 System Functions and Requirements 9-39
9.2.12.1.2 System Description 9-39
9.2.12.1.3 Major System Interfaces 9-39
9.2.12.1.4 System Operation 9-39
9.2.12.2 Liquid Waste Handling Systems 9-40
9.2.12.2.1 System Functions and Requirements 9-40
9.2.12.2.2 System Description 9-40

9.2.12.2.3 Major System Interfaces 9-40
9.2.12.2.4 System Operation....9-40

9.2.13 WASTEWATER TREATMENT SYSTEM 9-41
9.2.13.1 System Functions and Requirements 9-41
9.2.13.2 System Description 9-41
9.2.13.3 Major System Interfaces 9-43
9.2.13.4 System Operation 9-43

9.2.14 FIRE PROTECTION SYSTEM 9-44
9.2.14.1 System Functions and Requirements 9-44
9.2.14.2 System Description 9-44
9.2.14.3 Major System Interfaces 9-44
9.2.14.4 System Operation 9-45

9.2.15 ENVIRONMENTAL MONITORING SYSTEMS 9-46
9.2.15.1 System Functions and Requirements 9-46
9.2.15.2 System Description 9-46
9.2.15.3 Major System Interfaces 9-46
9.2.15.4 System Operation 9-46

9.2.16 SANITARY SEWER SYSTEM 9-47
9.2.16.1 System Functions and Requirements 9-47
9.2.16.2 System Description 9-47
9.2.16.3 Major System Interfaces 9-47
9.2.16.4 System Operation 9-47

9.2.17 GAS STORAGE AND SUPPLY SYSTEM 9-48
9.2.17.1 System Functions and Requirements 9-48
9.2.17.2 System Description 9-48
9.2.17.3 Major System Interfaces 9-48
9.2.17.4 System Operation 9-48

9.2.18 LABORATORIES 9-49
9.2.18.1 System Functions and Requirements 9-49
9.2.18.2 System Description 9-49
9.2.18.3 Major System Interfaces 9-50
9.2.18.4 System Operation 9-50

9.2.19 AUXILIARY BOILER SYSTEM 9-51
9.2.19.1 System Functions and Requirements 9-51
9.2.19.2 System Description 9-51
9.2.19.3 Major System Interfaces 9-51
9.2.19.4 System Operation 9-51

9.2.20 STORM WATER SYSTEM 9-52
9.2.20.1 System Functions and requirements 9-52
9.2.20.2 Systems Description 9-52
9.2.20.3 Major System Interfaces 9-52
9.2.20.4 System Operation 9-52

9.3 SYSTEM DESIGN DEVELOPMENT NEEDS 9-53

9.4 COMPLEXITY, RISK, AND FUTURE STUDIES 9-53

9.4.1 COMPLEXITY AND RISKS 9-53
9.4.2 FUTURE STUDIES 9-53
9.5 REFERENCES 9-54
LIST OF ASSUMPTIONS 9-55
APPENDICES 9-56
APPENDIX 9A DRAWINGS 9-56
APPENDIX 9B FINAL DESIGN REVIEW PRESENTATION TO BEA 9-57

LIST OF TABLES

Table 9-1: Water Chemistry..... 9-27

LIST OF FIGURES

Figure 9-1: CCSS Block Diagram 9-15
Figure 9-2: Pre-conceptual Water Balance Diagram 9-42

9 BALANCE OF PLANT SYSTEMS

SUMMARY AND CONCLUSIONS

The pre-conceptual design of the Balance of Plant (BOP) systems has been based on similar systems and components developed for the Advanced Light Water Reactor User Requirements Document (ALWR URD) [9-8] and systems used on typical power plant and industrial projects.

The BOP systems provide the mechanical and electrical support utilities for all areas and processes in the plant, and environmental control systems for those buildings in the Power Conversion System (PCS), Hydrogen Production System (HPS), and BOP buildings. Also included are the site security systems and environmental monitoring systems.

In order to minimize water consumption by the BOP systems, it is proposed to use closed circuit cooling towers for the component cooling water heat sink, and to use air cooled chillers for Heating Ventilation and Air Conditioning (HVAC) chilled water. This approach reduces evaporation, blow-down, and drift losses associated with standard cooling towers.

It has been determined that the HPS system makeup needs and evaporative coolers for the NHSS, PCS, and HPS call for a very significant amount of water requiring treatment and recycling. The wastewater treatment system is designed to use an evaporator to remove solids and recover water for reuse by the Plant (Service) Water system.

The BOP systems interface with the Nuclear Heat Supply System (NHSS), HPS, and PCS major systems to supply and receive electric power, make up water, cooling water, waste water, compressed air, control and supervision, solid and liquid waste, compressed gases and laboratory support.

It is recommended that trade studies be performed in the conceptual design phase for water and waste water optimization and control system architecture as described in Section 9.4.2.

INTRODUCTION

The BOP systems include those systems that generally provide support functions for the more than one of the major systems in the plant. Acronyms are defined in a PCDR index. BOP systems include:

- Plant Control and Instrumentation Systems
- Plant Electrical Distribution System
- Plant Water System
- Auxiliary Cooling (Component Cooling) Water System
- Potable Water System
- Demineralized Water System
- Chilled Water System
- BOP HVAC System
- Compressed Air System
- Equipment Handling System
- Decontamination System
- Waste Handling Systems
- Wastewater Treatment System
- Fire Protection System
- Environmental Monitoring Systems
- Sanitary Sewer System
- Gas Storage and Supply System
- Laboratories
- Auxiliary Boiler
- Storm Water System

9.1 GENERAL OVERVIEW

The BOP systems identified and described in this section have been developed to provide necessary support functions to the NHSS, PCS, and HPS, as well as to provide building services to buildings discussed in Section 10.

The system-by-system discussion that follows details the requirements and the functions for each of these systems, and describes the features and equipment associated with the primary and subsystems associated within each.

Since these BOP systems and the associated equipment are commonly used in power and other industrial applications, it is not anticipated that design data related to technology development are required.

9.2 SYSTEMS

9.2.1 Plant Control and Instrumentation Systems

9.2.1.1 Central Control and Supervisory System

9.2.1.1.1 System Functions and Requirements

The Central Control & Supervisory System (CCSS) provides control, automation control logic and information/alarm display and recording functions for the NHSS and PCS systems of the NGNP. The system provides automatic control functions and contains the ability for operator overrides where necessary to prevent unnecessary unit shutdowns. The CCSS also provides information/alarm display and recording functions for the HPS as well as very limited control logic interfaces with these modules.

A main control room for the station, containing a wide screen display panel, dedicated engineering and operator work stations, and any required auxiliary control and display consoles is provided to control the reactor/steam generation systems, power conversion systems and all necessary support systems. Automatic and manual control functions are implemented through the use of graphical user interface touch screen video display terminals. The HPS is controlled by a separate distributed control system that interfaces with the CCSS to provide alarm and status monitoring information to the wide panel displays and operator work stations located in the main control room. Control of the HPS is from a separate dedicated control facility located near the HPS electrolyzer area.

The CCSS is a non-nuclear safety related system. It is not relied upon or credited to function during or to mitigate any NHSS design basis event or initiating event [9-10]. The CCSS is isolated from all systems that are required to mitigate design basis events. The CCSS cannot initiate, or promulgate any action that could lead to a plant condition resulting in a release level greater than 10CFR100 [9-9] limits.

The CCSS is located outside the vital area security boundary. For further discussion refer to section 15 of this document.

9.2.1.1.2 System Description

The CCSS is a Distributed Control System (DCS) with redundant control processors and a redundant (dual loop) fiber optic real time high-speed data network. The control systems for the PCS (Turbine Generator), and the HPS interfaces with the CCSS (and all of the DCS components (Processors, I/O cabinets, displays, Graphical User Interface (GUI) controls, engineering work stations and all other operator interfaces) by means of a high-speed, redundant, real time data network. The DCS processors are configured in a dual redundant mode with automatic fail-over to the redundant processor if a fault is detected in a running processor. The GUI displays and controls are located in the main control room. The GUI displays and controls for the PCS and HPS may be located separately on site. The GUI displays and controls for the HPS are located in an operator accessible location in proximity to the HPS.

All alarms, system status and control system failure messages from the CCSS NHSS control functions and the PCS control functions and the HPS general control functions are available on video display terminals located in the main control room (if the operator workstations are co-located). Alarms and control system failure messages from the HPS are available in the main control room as system or sub-system common trouble alarms only.

Except where absolutely necessary for local maintenance and troubleshooting activities, the use of local (field mounted) switches and gages is avoided. All required inputs are derived from field mounted sensors and transmitters and then sent directly to the CCSS. The design of the CCSS will incorporate “Smart” (Bus Technology) instruments utilizing foundation field-bus protocols. A block diagram of the CCSS is shown in Figure 9-1.

9.2.1.1.3 Major System Interfaces

The CCSS interfaces with all of the systems and support systems required to operate the NHSS reactor and control the PCS steam generation process. It also interfaces with the control systems for the PCS (Turbine Generator) and the HPS.

In addition, package/skid mounted systems (such as water treatment, waste treatment, fire protection, air compressors, ventilation systems, etc.) can be purchased with integral microprocessor based control systems that provide both automatic and manual control and display functions through the use of graphical user interface touch screen video display terminals. These integral control systems interface with the CCSS, to provide alarm and status monitoring information to the wide screen display panels and operator/engineering workstations located in the main control room.

The Station Security and Fire Detection (SSFD) control and display system is separate from the CCSS but may receive status information from the system. The CCSS will not send commands to the SSFD.

If it becomes necessary for any part of the NHSS control system to be designed as Nuclear Safety Related / Class 1E, due to the safety assessment based on USNRC regulatory requirements, this function of the CCSS will be designed as a safety related subsystem of the CCSS. This safety related subsystem will perform all automatic and manual control functions and status displays without going through the CCSS. This safety related subsystem will not accept any control instructions from the CCSS and, in-turn, will send only alarm and status information to the CCSS.

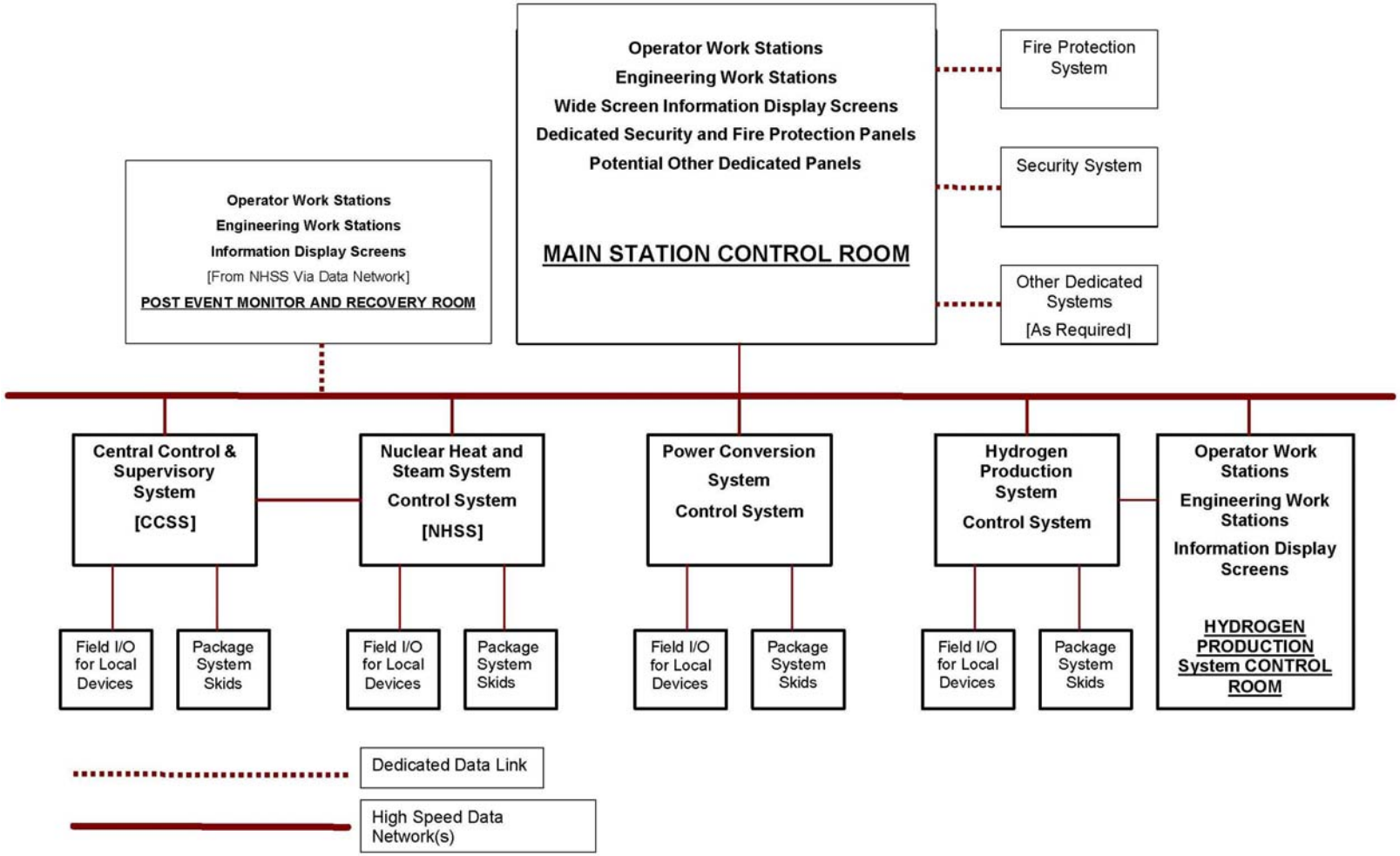

Figure 9-1: CCSS Block Diagram

9.2.1.1.4 System Operation

CCSS operation and the operation of each individual control sub-system are accomplished by means of Graphical User Interface screens presented on Cathode Ray Tube - Liquid Crystal Display (CRT/LCD) video display terminals. Touch screen technology/ graphical user interfaces are utilized for operator display selection and control interface. Primary control is provided by automated control logic that will allow the operator to monitor plant status without the need for frequent manual operator control interface. In general, preplanned manual operator control is limited to startup and normal shutdown functions and changes in plant operating configurations. [Example: increased hydrogen production with a simultaneous reduction in electrical power output.]

Each individual control system [NHSS, PCS, and HPS] provides automatic and manual control for its respective systems and subsystems. In general, the CCSS provides overall alarm and status monitoring functions only. Automatic and manual control functions contained in the CCSS control plant support systems that are not included in the control systems defined above. The CCSS can, if required, provide manual override controls to shutdown any system, subsystem or individual control system if required from the standpoint of personnel safety and/or investment protection.

9.2.1.2 Radiation Monitoring System

9.2.1.2.1 System Functions and Requirements

The Radiation Monitoring System (RMS) provides for the detection, control and measurement of normal or abnormal radiological conditions within the facility. It monitors areas of the plant and process streams where there are known or potential sources of radioactivity, including process streams with the potential to release radioactivity to the environment. The RMS functions during all plant operating conditions including normal operation, shutdown, and accident or emergency conditions.

9.2.1.2.2 System Description

The RMS consists of the Area Monitoring System and the Process/Effluent Monitoring System.

The Area Monitoring System provides operator information relative to airborne concentrations of radioactive gases and particulate radioactivity at various locations in the plant. The Area Monitoring System also provides operator information relative to external gamma radiation at fixed points throughout the plant, where applicable.

The Process/Effluent Monitoring System provides operator information concerning the normal or abnormal presence of radioactive materials in the various plant process and vent streams. The Process/Effluent Monitoring System also provides operator information concerning the potential release of radioactive materials to the environment.

9.2.1.2.3 Major System Interfaces

The RMS interfaces with the following depending upon final system design:

- Area Monitoring System: Nuclear Heat Supply Building (NHSB), Steam Generator Building, HPS Acid Decomposer building, Condensate Polishing Area, PCS Turbine Building, Services Building, Ancillary Building, Cooling Water Plant Building, and Main Control Room.
- Process/Effluent Monitoring System: HPS decomposer outlet, Main Steam, Steam Jet Air Ejector (Air Cooled Condenser), Condensate Polisher, Sampling System, and Wastewater system, and Control Room HVAC.

9.2.1.2.4 System Operation

The Radiation Monitoring System operates during all plant operating conditions including normal operation, shutdown, and accident or emergency conditions.

9.2.1.3 Plant Communication System

9.2.1.3.1 System Functions and Requirements

The Communication System performs the following major functions:

- Intraplant communications and plant to offsite communications during normal, maintenance, transient, fire and accident conditions, including loss of offsite power.
- Voice communications during normal operations and during abnormal, accident and emergency, including the loss of normal AC power.
- The wireless telephone, private branch exchange and telephone/page subsystems are powered by an uninterruptible power supply system. All subsystems are completely independent such that a single failure will have no effect on the other subsystems.
- The wireless telephone, telephone/page and Private Branch Exchange (PBX) subsystems annunciate in all areas of the plant both indoors and out. There is no area of the plant where these subsystems cannot be accessed and effectively used.
- No communication system component can interfere with any plant electronic devices and vice versa.

9.2.1.3.2 System Description

The communication system consists of subsystems which include:

<u>Private Branch Exchange (PBX)</u>

The PBX telephone subsystem is a push button telephone system. Phones are programmable for one button dialing. This subsystem is able to access the wireless telephone units, the page subsystem and offsite telephone subsystems. Ties to outside phones are both commercial and telephone lines and dedicated lines for emergency use by offsite agencies and

locations. The system is capable of transferring calls and providing conference calls for up to five stations including wireless telephone stations.

Telephone/page system

This system shall have one page line and five party page lines with merge capability. The page annunciation lines provide a method for plant wide alarms.

Wireless telephone system

This system utilizes the latest cellular telephone type technology. The movement about the plant and site of a remote unit in use has no affect on it use. Remote units have the capability of accessing other units, the PBX system and telephone/page system. Some of the remote units are compatible with respirators and other protective equipment while still other units can be of the head set type allowing hands-free operation.

Sound-power system

The sound power system requires no external power source. There will be five separate loops: a refueling loop, three maintenance loops and startup loop.

Plant to offsite communications

Commercial telephone land lines are provided between the plant and commercial telephone exchange. Access to this network will be obtained by dialing a selected digit on the PBX system. A VHF base radio station provides communication with the local law enforcement authorities and other offsite facilities. The microwave system consists of digital radio receivers, transmitters, antennas, and frequency division multiplexing equipment.

Security communication system

Each guard or watchman on duty is capable of maintaining communication with the security central alarm station and secondary alarm station by means of hand-held radio or local page/party communication, where available. Upon activation of an intrusion alarm, the security supervisor will be capable of informing the guards of the area alarmed and calling for assistant from the Local Law Enforcement Authorities (LLEA), if needed. Communication to the LLEA will be by telephone or by radio.

9.2.1.3.3 Major System Interfaces

The communication system does not directly interface with but is indispensable in operation of the NHSS, HPS, PCS and all BOP systems.

9.2.1.3.4 System Operation

The communication system operates during start-up, normal operation, abnormal operation, shutdown and operation during an accident conditions.

The wireless telephone control unit and the private branch exchange system have high expansion capability. Future expansion of systems does not require the existing service to be interrupted or degraded/shutdown.

The design of the communication systems permits routine testing and inspection. Degradation of any communications systems in daily use will be able can be readily identified and corrected.

9.2.1.4 Security System

This section provides the requirements for protection system of the plant from sabotage as required by 10CFR73.55 [9-1]. This system is developed in conjunction with the overall Safeguards and Security Outline described in Section 15.

9.2.1.4.1 System Functions and Requirements

The security system protects the plant from both internal and external threats by limiting access to the protected areas to authorized personnel only, and by monitoring and controlling the movement of personnel, vehicles, and material within the plant.

The security system design process identifies the need for and establishes security boundaries and protection levels for the various plant areas. This process includes identifying specific vulnerabilities and developing strategies to eliminate them. Security administrators work with the plant designers to provide input to the plant layout and building design to incorporate security into the design basis for the entire plant. The security systems are evaluated for integration with plant operations and maintenance.

The system provides full security requirements during all plant operating modes including normal, maintenance, and upset conditions such as loss of power, seismic events, fire, and other emergency conditions identified.

The intrusion detection system detects attempts to gain unauthorized access or introduce unauthorized material across protected area boundaries. It assures detection of, assessment of, and response to unauthorized penetrations of the protected area boundary.

Any restrictions or barriers used must be compatible with fire protection life safety, health physics, and operator activities during normal as well as upset conditions.

9.2.1.4.2 System Description

The system consists of physical measures such as fencing, clear isolation zones with CCTV and lighting, construction material selection, bullet resistant construction, blast-proof doors, proper door hardware, and barriers at boundary piping, ductwork, and electrical penetrations.

A properly trained and equipped group of responders is necessary along with an alarm system and a communication system to provide constant and secure communication between the security force members and the control room operators, and the local authorities.

An access control system is provided for personnel, vehicles, and material. This system includes facilities for properly searching personnel and vehicles, proper design, sizing and location of vehicle portals and personnel access points including identification card readers.

The intrusion detection system consists of a combination of trained personnel, physical barriers, and electronic measures such as CCTV cameras, motion detectors, and alarms to detect unauthorized entry into the protected areas. The system also provides training and equipment necessary for assessing and responding to an unauthorized intrusion.

The security system includes the Security Alarm Station (SAS) and the Central Alarm Station (CAS) located inside vital area boundaries, to house dedicated security personnel and monitoring equipment.

9.2.1.4.3 Major System Interfaces

The site security system interfaces include the following:

- NHSB
- NHSS Support Buildings
- Electric power distribution, both normal and emergency
- CCSS
- Communications System
- HVAC system
- Lighting system
- Grounding system
- Storm Drains

9.2.1.4.4 System Operation

The security is fully operational at all times during NHSS normal operation, emergency and post accident periods.

9.2.2 Plant Electrical Distribution System

9.2.2.1 System Functions and Requirements

The electric power systems supply power at to the plant safety and non-safety equipment for normal plant operation, startup and normal shutdown, and for accident mitigation and safe shutdown.

High voltage systems Alternating Current (AC) power from the turbine generator to large components such as main transformers and large motors (i.e. Helium Circulators) on site and off site to the utility grid. High voltage power is also fed from off site when the turbine generator is not operating. Medium voltage systems provide electrical power to major system components (>600 V motors).

Low voltage systems power small motors control systems, and lighting.

The HPS electrolyzers require dedicated Direct Current (DC) power at low voltage, but very high amperage. Dedicated AC/DC converters are provided for this function.

9.2.2.2 System Description

The one-line diagram NGNP-06-DWG-001 included in Appendix 9A shows a simplified arrangement of the primary electrical components; the plant main electrical generator, generator breaker, step-up transformer, unit auxiliary transformer, station start-up transformer, feeders, busses and their connections.

The off-site power system is the set of circuits and components used to interconnect the off-site transmission system, the plant main generator, and the on-site electric power distribution systems. The system distributes ac power for the operation of the plant systems under all conditions of plant operation, including design basis accidents, when such power is available from the off-site transmission system or from the plant main generator.

The medium and low voltage ac power distribution systems distribute ac power to the plant auxiliary and service loads and to instrumentation and control system loads. These power distribution systems do not perform any function credited in the safety analysis.

The on-site standby ac power supply system consists of independent generating units which, in case of loss of off-site power concurrent with a turbine trip, supply power to selected systems.

The DC and low voltage vital ac power supply systems supply power to protective relays, control and instrumentation systems, and to additional dc auxiliary systems under normal and emergency conditions. Batteries are the sources of power in the event of a loss of all AC power sources. The dc and low voltage vital ac power supply systems are divided into safety systems

which supply power exclusively to safety loads; and non-safety systems, which feed all the non-safety loads.

In addition to performing their basic power distribution functions, the ac and dc electric power systems also provide the necessary control functions, such as interlocks and automatic bus transfers, required to ensure reliable power supply to the plant auxiliary systems, and provide information for local and remote monitoring and control of their operating conditions.

The power supply to the HPS electrolyzers is low voltage and very high amperage. Converters are provided and house in the HPS electrical building. Electrical distribution equipment in the vicinity of electrolyzers is classified for Class 1 Div 1 service, due to the potential for explosive mixtures of hydrogen.

9.2.2.3 Major System Interfaces

The Plant Electrical Distribution System interfaces directly with NHSS, HPS, PCS, and other BOP systems. It interfaces indirectly with the Heat Transport System (HTS) provide a source of power feeding through the NHSS electrical distribution.

9.2.2.4 System Operation

The output of the generator is connected to the step-up and unit auxiliary transformers via isolated phase bus ducts.

During normal operation, the plant's main generator supplies electrical power to the plant auxiliary loads through the unit auxiliary transformer.

During plant start-up, shutdown and outage, the generator breaker remains open. The plant AC power is provided from preferred off-site power through the station start-up transformer. An alternate source of power is available through the step-up transformer and unit auxiliary transformer as long as the generator breaker is open.

The arrangement of the Medium Voltage (MV) switchgear allows supply of redundant equipment loads from separate busses and provides flexibility. The MV switchgear supply power to large electrical loads (motors, heaters, etc.).

The low voltage unit substations supply power to low voltage motors, heaters, and Motor Control Centers (MCC).

Standby diesels generators provide power when all offsite power sources are unavailable. These diesel generators are started and loaded slowly in the loss of power event. They are not relied upon in the safety analysis of design basis events.

9.2.3 Plant Water System

9.2.3.1 System Functions and Requirements

The system comprising multiple pumps and hydro pneumatic tanks provides water from wells located on site to the potable water system, the plant water system, the demineralized water system, the firewater tank, and make-up for the Auxiliary Cooling Circuit (Component Cooling), chilled water and heating water systems.

9.2.3.2 System Description

Water is supplied to the site from 4 wells. Some existing wells may be used depending on location and capacity. Water is pumped into raw water storage tanks for distribution to separate water treatment/conditioning systems and storage tanks for the potable and plant water systems. The plant water is distributed throughout the plant to serve all other water users, including the fire protection, demineralized water, chilled water, and hydrogen generation systems, along with all other equipment requiring water make-up.

9.2.3.3 Major System Interfaces

The Plant water system interfaces with following systems:

- Plant Electrical Distribution System
- Chilled Water Systems
- Potable Water System
- Fire Protection System
- HPS
- PCS
- Auxiliary Cooling (Component Cooling) Water System

9.2.3.4 System Operation

The raw water tanks are made up from the well system with automatic level control. Raw water will flow either by gravity or by pump to the potable water treatment and plant water treatment systems, and into the potable and plant water storage tanks. Separate pumps and piping systems distribute the water from the two systems throughout the plant. The system operates continuously on demand, when electric power is available.

9.2.4 Auxiliary Cooling (Component Cooling) Water System

9.2.4.1 System Functions and Requirements

The BOP Component Cooling Water System (CCWS) provides cooling water for the NHSS, PCS and HPS systems using water at 80F +/-.

The following components in the NHSS are cooled by the CCWS.

- NHSS active cooling system heat exchangers

The following subsystems and components in the PCS are cooled by the CCWS:

- Main turbine generator bearing cooling systems
- Turbine lube oil coolers
- Condensate pump motors
- Feed-water pump motors
- Air compressor coolers

The following components in the HPS are cooled by the CCWS:

- Electrolyzer Anolyte coolers
- Electrolyzer Catholyte coolers
- $S0_x$ trim coolers

Cooling water lines must be protected from freezing in cold weather.

9.2.4.2 System Description

The CCWS consists of three subsystems comprising multiple motor driven pumps and closed circuit cooling towers to support the needs of the NHSS, PCS and HPS loads. For each subsystem, a single operating pump provides 100% of design flow, with a standby pump available for back up and maintenance needs. Each subsystem includes multiple wet surface closed circuit coolers as required to provide the needed cooling capacity. One spare closed circuit evaporative cooler and pump is provided for each system. Closed circuit cooler' spray water is provided from the plant water system. The CCWS system also includes an elevated surge tank that maintains system pressure and provides make up water to account for expansion and system leakage. The surge and expansion tank feeding each system is supplied from the demineralized water or plant water system, as required, by interfacing system components. Propylene glycol or heat tracing are provided for freeze protection.

9.2.4.3 Major System Interfaces

The system interfaces with the following major systems:

- NHSS
- PCS
- HPS
- Plant Electrical Distribution System
- Demineralized water
- Plant Water

9.2.4.4 System Operation

The CCWS operates continuously, with temperature control provided by a control valve by-pass arrangement around the closed circuit evaporative coolers. The closed circuit coolers will also be able to act as dry air to water coolers without spray when the ambient temperature is low enough, (at approximately 50° F).

9.2.5 Potable Water System

9.2.5.1 System Functions and Requirements

The system receives water from the plant (service) water system, disinfects, and distributes the water to fixtures located in buildings through the site. The potable water system is separated from all non-potable water systems to prevent backflow and potential contamination. The estimated water usage is 7000 gallons per day based on a work force of approximately 200 personnel during plant operation.

9.2.5.2 System Description

Water is disinfected by chlorination and delivered to storage tanks for the potable water system. The potable water is supplied to all buildings with plumbing facilities. Backflow of non-potable water into this system is prevented with back flow preventers, and air gaps, in accordance with the International Plumbing Code (IPC) [9-2].

9.2.5.3 Major System Interfaces

- Plant Electrical Distribution System
- Plant Water System
- Building Plumbing systems

9.2.5.4 System Operation

The potable water tanks receive make-up from the plant water system using automatic level control. Water is disinfected as it is provided to the storage tank. Potable water is distributed on demand to occupied buildings, emergency showers and eye wash stations throughout the plant site.

9.2.6 Demineralized Water System

9.2.6.1 System Functions and Requirements

The Demineralized Water System (DWS) treats onsite well water and produces demineralized water for the once through steam generator, condensate polisher regeneration water, laboratory usage, hydrogen generation system makeup water, and miscellaneous chemical dilution services. The demineralized water quality is less than 0.1 microsiemens/cm, and less than 10 ppb silica and less than 10 ppb sodium.

9.2.6.2 System Description

The site makeup water demineralizer system shall remove the dissolved solids from well water and produce demineralized water for plant use. The chemistry of three previously drilled wells on the site [9-3] is as follows:

Table 9-1: Water Chemistry

	Well A	Well B	Well C
Depth of Water (ft)	560-603	480-510	460-500
Temperature ^{0}F	56	54	55
Sodium, mg/l	13	15	7
Chloride, mg/l	13	30	10
Bicarbonate, mg/l	150	170	172
Potassium, mg/l	3	3	2
Nitrate, mg/l	2	1	1
Sulfate, mg/l	14	20	20
Fluoride, mg/l	0.5	0.4	0.2
Calcium, mg/l	33	40	41
Magnesium, mg/l	10	17	13
Tritium, pCi/ml	0.5	5	0.1
Silica, mg/l	32	26	24
Total Dissolved Solids, mg/l	200	220	203
Specific Conductance,	300	365	327
Micromho/cm	120	170	156
Hardness as CaCO3			

Plant water is used as makeup to the DWS.

The makeup demineralizer system consists of multimedia filters, inlet cartridge filters, chemical feed equipment, Reverse Osmosis (RO), Electrodeionization (EDI) and demineralized water storage tank, piping and pumps. An RO cleaning system is also included.

The following major components comprise the Demineralized Water System:

- One 500,000 gallon Demineralized Water Storage Tank
- Two Demineralized Water Forwarding Pumps
- 100 gpm Demineralized Water Makeup Pumps
- 500 gpm multimedia filter
- 80 gpm RO system
- 80 gpm EDI system

9.2.6.3 Major System Interfaces

The demineralized water system interfaces with the plant water, PCS and HPS and with the site laboratory.

9.2.6.4 System Operation

The filter/RO/EDI system is used to supply demineralized water to fill the 500,000-gallon Demineralized Water Storage Tank.

The level in the Demineralized Water Storage Tank controls multimedia filter/RO/EDI operation. Normally, the multimedia filter/RO//EDI unit operates at a constant flow of approximately 80 gpm demineralized water output.

Water is pumped by the Demineralized Water Makeup Pumps to the multimedia filtration system for removal of suspended solids present in well water. Backwash pump provide for the backwash of the multimedia filters. After multimedia filtration, filtered water is pumped to the RO pre-filtration system. Pre-filtration consists of cartridge filters mounted upstream of the RO system to remove small diameter particles which can pass through the multimedia filter.
Antiscalant is injected into the filter feed stream to impede scale formation on the RO membranes. Sodium bisulfite is also injected into the filter feed stream, if required, to remove chlorine from the feed water. The system is housed in the water treatment building.

The RO system has a permeate flow of approximately 80 gpm and feeds directly to the EDI system.

The EDI system is a stacked E-Cell system which provides approximately 80 gpm output. The E-cell system includes rectifier and recirculation pumps. Reject from the E-Cell is recirculated to the feed of the RO. The E-Cells feed the demineralized water storage tank.

Demineralized water stored in the demineralized water storage tank is distributed to the once through steam generator building for condensate polishing regeneration, to the hydrogen generation system for makeup water, to the chemical feed systems for dilution water and to the site laboratory.

The RO/EDI system is controlled via a Programmable Logic Controller (PLC). Data from the PLC is available in the DCS through a serial link. The demineralized water forwarding Pumps feed the demineralized water distribution system.

9.2.7 Chilled Water System

9.2.7.1 System Functions and Requirements

The Chilled Water Systems (CHWS) distribute cooling water to the air handling units in the NHSB and support building HVAC systems, BOP HVAC systems, and any other equipment requiring relatively low temperature cooling water. The chilled water system is protected from freezing in cold weather.

9.2.7.2 System Description

The CHWS consists of two separate systems, one system for the NHSB and support buildings, and one for the Balance of Plant (BOP). Each system has multiple air cooled packaged chillers providing 45°F chilled water to their respective systems. Each packaged chiller has a dedicated centrifugal pump to circulate chilled water through the system. (An alternative of separate chillers mounted inside a building with remote, air cooled condensers will be considered.).

The BOP system has two additional chillers, one for stand-by, and one assumed out for maintenance to provide a reliable supply of chilled water. (Depending on the actual number of chillers, more than one stand-by unit may be desirable,)

9.2.7.3 Major System Interfaces

The CHWS interfaces with the HVAC system, the Plant Water System, the Plant Electric distribution system, the CCSS, and other systems identified as needing low temperature cooling water.

9.2.7.4 System Operation

The CHWS provides 45 ^{o}F chilled water with a 10 ^{o}F temperature rise through the system. The actual size and number of chiller units will be determined during the conceptual design phase.

If packaged air cooled chillers are used, freeze protection, utilizing either electric heat tracing or glycol, will be required for the chillers and the exterior piping.

The BOP chilled water system distributes chilled water to the various buildings through a primary piping loop. Secondary pumps and piping systems are provided at each major building served by the system.

The primary loop flow and temperature is maintained by the plant control system independently from the individual building systems.

9.2.8 BOP HVAC System

9.2.8.1 System Functions and Requirements

The BOP HVAC system provides appropriate heating, ventilation and air conditioning for each building on the NGNP site. The system also provides filtration of exhaust streams from those areas of the plant that have the potential for radioactive contamination through the interface with the radiation monitoring system. All BOP HVAC systems are non-nuclear safety related [9-10] and therefore do not require emergency power. Standby power is provided to essential systems as determined by risk informed safety analysis.

It is not expected that filtered air is required to pressurize the control building. This is because the main control room is not credited and therefore not required to be habitable in the event of a nuclear safety design basis event [9-10]. The Control Building HVAC envelop and the HPS control building HVAC envelop provide protection to operators from chemical hazards as required based on evaluations in accordance with OSHA standards [9-11].

The HVAC system functions include the following:

- Maintain environments within comfort levels for operating and maintenance personnel, and ensure reliable equipment operation.
- Provide ventilation rates required to maintain indoor air quality for personnel in accordance with ASHRAE Standard 62 [9-4].
- Provide ventilation required for processes and equipment
- Maintain pressure differential and flow paths between rooms in the process buildings to prevent contamination migration to adjacent areas.
- Provide adequate filtration of exhaust streams to prevent release of any contaminants into the atmosphere.
- Provide adequate isolation capability to augment the fire protection system ability to contain fire suppressants, combustion products, and high temperatures during fire events.
- Provide smoke removal capability in accordance with National Fire Protection Association (NFPA) requirements [9-5].

9.2.8.2 System Description

The NGNP HVAC systems are divided in to three groups. The NHSB HVAC system is described in detail in Section 4 as an NHSS support system. The Turbine Building HVAC is addressed in section 8 as a PCS support system. The BOP HVAC systems are described in this section.

Air handling units with chilled water coils, heating water coils and filters provide conditioned air to the buildings that are identified as needing cooling, either for personnel comfort or for equipment operation. The terms chilled water and heating water are used for simplicity. Actual coolant and heating medium for freeze protection is often a solution of

Propylene Glycol in water. Fresh air is supplied to the air handlers to satisfy ventilation requirements. For smaller, remote areas, direct expansion cooling coils with remote or packaged condensing units are utilized.

Buildings that contain areas with potential contamination are provided with air handling units to supply heating and cooling as described above. In addition, these buildings exhaust through filters with carbon, and/or High Efficiency Particulate Air (HEPA) filter banks as required, to prevent the release of either particulate or gaseous contamination to the environment. These exhaust systems are arranged to ensure that air flow is from areas of lesser to greater potential for contamination to prevent the spread of contamination within the building.

The PCS turbine building (See Section 8) and other buildings not needing air conditioning are ventilated with once-through systems using fresh air to maintain maximum temperatures during summer conditions, and are provided with unit heaters for winter heating. Spot coolers are provided in areas of these buildings requiring temperature control.

The following is a description of the HVAC systems selected for the pre-conceptual design of the BOP buildings.

- The Control Building is a fully air conditioned building using air handling units supplied with chilled water, and heating water.
- The PCS Turbine Building is ventilated using a combination of natural draft and fan forced (roof mounted exhaust fans) and wall mounted exhaust fans. Supply fans or spot coolers may be required to service interior spaces and rooms, or below grade floors.
- The Services Building is air conditioned with air handling units supplied with chilled water and steam. Potentially contaminated areas are exhausted through HEPA filtration units.
- The Ancillary Building mechanical equipment areas are ventilated. The electric rooms are air conditioned.
- The Water Treatment Building is ventilated with exhaust fans and intake louvers, with the exceptions of any control areas. Control areas are air conditioned with packaged A/C units. Heat is provided by steam, hot water, or electric unit heaters.
- The Sewage Treatment Building is ventilated with exhaust fans and intake louvers, with the exceptions of any control areas. Control areas are air conditioned with packaged Air Conditioning (A/C) units. Heat is provided by steam, hot water, or electric unit heaters.
- The Administration Building: Fully air conditioned building using air handling units supplied with chilled water and either steam of electric heating coils.
- The Security Building: Fully air conditioned building using air handling units supplied with chilled water, and either steam or electric heating coils.
- The Cooling Water Building is ventilated with exhaust fans and intake louvers, with the exceptions of any control areas. Control areas are air conditioned with packaged A/C units. Heat is provided by steam, hot water, or electric unit heaters.

- The Auxiliary Boiler Room is ventilated with exhaust fans and intake louvers, with the exceptions of any control areas. Control areas are air conditioned with packaged A/C units. Heat is provided by electric unit heaters.
- The Condenser Area Buildings are ventilated with exhaust fans and intake louvers, with the exceptions of any control areas. Control areas are air conditioned with packaged A/C units. Heat is provided by steam, hot water, or electric unit heaters.
- The Fire Pump House is ventilated with wall fans and intake louvers, heated with electric unit heaters.
- The Warehouse is ventilated with roof fans and wall intake louvers, and heated with unit heaters. Office areas and any storage areas needing a higher level of temperature control will be serviced by packaged air conditioning units.
- The Well Water Pump Houses are naturally ventilated. Heat is provided by electric unit heaters.
- The HPS Control Building is air conditioning either air handling unites from the central chilled water system, or with packaged air cooled units. Heating is electric.
- The HPS Electric Rooms: Ventilation using filtered outdoor air and roof exhaust fans. Electric unit heaters will provide heating.
- The HPS Absorber Electrolyzer Building is ventilated by a combination of passive building features such as roof openings and wall louvers to prevent build-up of explosive vapor concentrations, supplemented with mechanical fans where appropriate. Spark proof fans with explosion proof fan motors are provided.

9.2.8.3 Major System Interfaces

The BOP HVAC systems interface with the following major systems:

- Plant Electric Distribution System
- Instrument and control system
- Instrument and service air systems
- Chilled water system
- Fire detection and suppression system
- Security system
- Radiation Monitoring System
-

9.2.8.4 System Operation

The HVAC systems serving the major plant buildings are operated continuously and controlled and monitored from the CCSS. HVAC systems for other buildings may be operated locally, but are still monitored by the CCSS.

9.2.9 Compressed Air System

9.2.9.1 System Functions and Requirements

The compressed air systems consist of the Service Air (SA), Instrument Air (IA), and Breathing Air (BA) systems.

The SA system provides a continuous supply of dry, filtered compressed air for air operated tools and equipment, and for various maintenance purposes.

The IA system provides oil free, dry, filtered compressed instrument quality air for use by air operated instrumentation and control equipment. IA will meet the requirements of ANSI/ISA-7.0.01 [9-6], Quality Standard for Instrument Air.

The BA system will provide breathing quality air in accordance with Compressed Gas Association standard CGA-7.1[9-7], in areas as required by chemical hazard analyses in accordance with OSHA requirements [9-11]. Breathing air shall be provided by dedicated compressors and filter-dryer equipment.

9.2.9.2 System Description

Service air is supplied by rotary screw compressors and refrigerated air dryers. Instrument air is provided by oil free rotary compressors with desiccant air dryers. Breathing air is supplied by oil free rotary compressors with desiccant air dryers. The system will be provided with CO and CO2 monitors and alarms.

Each system has a suitable air receiver sized to provide an adequate supply in the event of a loss of the respective compressor, and to minimize pressure fluctuations in the three systems.

Major compressed air system components are located in the Ancillary Building and the PCS Turbine building.

9.2.9.3 Major System Interfaces

The compressed air system interface with the following systems:

- NHSS
- HPS
- PCS
- Plant electrical Distribution System
- Chilled Water System
- Auxiliary Cooling (Component cooling) water system
- HVAC system
- Instrumentation and control system

9.2.9.4 System Operation

The compressed air systems are operated continuously and automatically under the control of compressor unit mounted control panels. The systems and individual compressors are monitored and alarmed by the CCSS.

9.2.10 Equipment Handling System

9.2.10.1 System Functions and Requirements

The Equipment Handling System consists of fixed cranes, portable cranes, and other lifting devices that allow equipment to be installed, maintained, repaired, and replaced while limiting impact to plant operations. Mobile material handling equipment such as fork lifts and chain falls are provided for areas that are not equipped with installed cranes.

9.2.10.2 System Description

Fixed bridge cranes are provided in the NHSS building, the HPS acid decomposer Building, Steam Generator Building and (PCS) Turbine Building. Monorails and hoists are provided in the air cooled condenser area for the condenser coils and fans. Monorails will also be provided in the HPS electrolyzer area to service small components. Jib cranes are provided to service condensate pumps and feedwater pumps. Portable cranes, mobile cranes, and fork lifts are provided for service in the warehouse and throughout the plant.

9.2.10.3 Major System Interfaces

The Equipment Handling System interfaces with the following major systems and buildings:

- NHSS
- HPS
- PCS
- Turbine Generator
- Air Cooled Condensers
- Warehouse

9.2.10.4 System Operation

All equipment handling components are locally operated with wall or pendent mounted controls as needed. In-place or movable lifting equipment is primarily used for servicing components during maintenance operations. Fork lifts are used primarily for warehouse activities, but may be also be used for component maintenance.

9.2.11 Decontamination System

9.2.11.1 System Functions and Requirements

The decontamination system includes equipment and procedures for both equipment and personnel decontamination.

The main requirement for equipment decontamination is to ensure that loose surface contamination is removed to provide a safe work environment, and to prevent the spread of contamination. The decontamination system uses the following processes:

- Vacuum cleaning
- Dry ice cleaning
- Hand wipe cleaning
- Wet abrasive blasting

The system also provides recovery of parts for reuse, and decontamination of scrapped components to the extent required by As Low As Reasonable Achievable (ALARA) principles.

The personnel decontamination systems include the decontamination sink, hot shower, hot toilet, radiation detection equipment, and cleaning supplies needed for personnel decontamination.

9.2.11.2 System Description

Vacuum cleaning will be accomplished with industrial vacuum cleaners equipped with HEPA filters.

Dry ice cleaning machines are commercially available, and can be equipped with a range of nozzles to fulfill various requirements. The operations will be conducted in permanent of temporary enclosures each equipped with a HEPA filtered extraction system. Wet blasting using a wet abrasive medium such as glass beads is used to supplement the CO2 blasting.

9.2.11.3 Major System Interfaces

The Decontamination System interfaces with the following plant systems:

- NHSS
- Compressed air system
- Demineralized water system
- Solid waste system
- Liquid waste system

- AC power system
- HVAC system

9.2.11.4 System Operation

All equipment used for decontamination is manually operated on an as-needed basis, primarily to support plant or component maintenance and modifications.

9.2.12 Waste Handling Systems

9.2.12.1 Solid and Condensed Waste Handling System

The Solid Waste Handling System (SWHS) is designed to handle, store, and discharge low and medium-level solid radioactive waste generated during normal plant operations as well as, maintenance activities, and upset conditions.

9.2.12.1.1 System Functions and Requirements

The SWHS collects compressible and non-compressible waste and conditions it for disposal. Compactable wastes include filter media from the HVAC, Helium, and vacuum cleaning equipment as well as cloth and paper wastes. Non-compactable waste includes resins, gaskets, discarded parts, motors, and dust from cyclone separators.

9.2.12.1.2 System Description

The SWHS consists of:

- In-drum compactors
- Liquid solidification equipment
- Resin and dust immobilization equipment
- Waste storage areas

9.2.12.1.3 Major System Interfaces

The SWHS interfaces with the following plant systems:

- NHSS
- Radiation monitoring
- Laboratories
- Demineralized water
- Compressed air
- Plant Electrical Distribution System

9.2.12.1.4 System Operation

Dry compactable waste is collected in drums and compacted. The drums are stored in the compactor area. Dry non-compactable waste is immobilized by adding mortar to the drums. Solidified resin, dust and liquid are prepared similarly.

Short-lived high level waste is stored on site in suitable containers in controlled areas until such time as it can be reclassified.

9.2.12.2 Liquid Waste Handling Systems

The Liquid Waste Handling System (LWHS) is designed to handle, store, and discharge low and medium-level liquid radioactive waste generated during normal plant operations as well as, maintenance activities, and upset conditions.

9.2.12.2.1 System Functions and Requirements

The LWHS collects waste generated at the hot laundry, decontamination facility, the controlled area washroom, from leaks in the NHSS Building cooling water circuits, and from general cleaning and fire suppression operations. The collected waste is treated and stored in tanks for monitoring to determine compliance with regulatory requirements before being released.

9.2.12.2.2 System Description

The LWS consists of sumps, drain piping and pumps that collect and transfer the liquid waste for processing through either ion exchange, or precipitation equipment. The effluent from this equipment is collected in tanks where it is monitored and analyzed through full spectrum analysis. If the effluent complies with requirements, it is released, if not, it is sent back for reprocessing.

9.2.12.2.3 Major System Interfaces

The LWS interfaces with the following plant systems:

- Plant Electrical Distribution System
- Demineralized water system
- Laboratories
- Radiation monitoring system

9.2.12.2.4 System Operation

The ion exchange and precipitation equipment is operated on a batch process basis.

9.2.13 Wastewater Treatment System

9.2.13.1 System Functions and Requirements

The wastewater treatment system shall collect non-radioactive liquid industrial wastes from the water treatment system, PCS, HPS and from building floor drains and treat the wastewater for reuse within the plant. The treatment system is a zero discharge industrial wastewater treatment system and shall comprise cost effective combination of oil water separation, ultrafiltration, reverse osmosis desalination and evaporation. Evaporator sludge is dewatered for landfill disposal. Evaporator distillate can be reused within the plant.

9.2.13.2 System Description

Plant water is used for pump seals, for equipment floor wash down, and for other uses. This water can be contaminated with oil. All onsite buildings with the provisions to use plant water are provided with floor drainage systems, collections sumps and sump pumps to collect floor drainage. The wastewater is collected and pumped to a dissolved air flotation type oil/water separator designed to reduce oil and grease concentration to 1 mg/l. Treated building floor drainage flows from the oil water separator to the wastewater sump.

The demineralized water treatment system produces wastewater from reverse osmosis /electrodeionization reject and multimedia filter backwash. Demineralized water is used in the turbine building to backwash the steam cycle powdered resin type condensate polisher.

Evaporative cooler blow-down and process wastewater is produced from the NHSS, HPS, and PCS auxiliary cooling systems.

Wastewater HPS, water treatment system and PCS is collected in area sumps and pumped to the wastewater sump.

Wastewater is pumped from the wastewater sumps to the evaporator pretreatment system, which consists of ultrafiltration, cartridge filtration and reverses osmosis units for the removal of suspended solids and dissolved organics and the concentration of dissolved solids. Evaporator pretreatment system product wastewater is collected in the evaporator feed tank.

From the evaporator feed tank, wastewater is pumped to the wastewater evaporator system by the evaporator feed pumps.

During evaporator operation, the incoming wastewater is concentrated to a high suspended solids brine. Evaporator distillate total dissolved solids are suitable for plant re-use as makeup to the demineralized water treatment system. The concentrated brine purge stream from the evaporator is directed to plate and frame filter presses for dewatering. Filtrate is returned to the evaporator feed tank. Sludge is shipped offsite for disposal at existing INL solid waste facilities. A pre-conceptual water balance is shown in Figure 9-2.

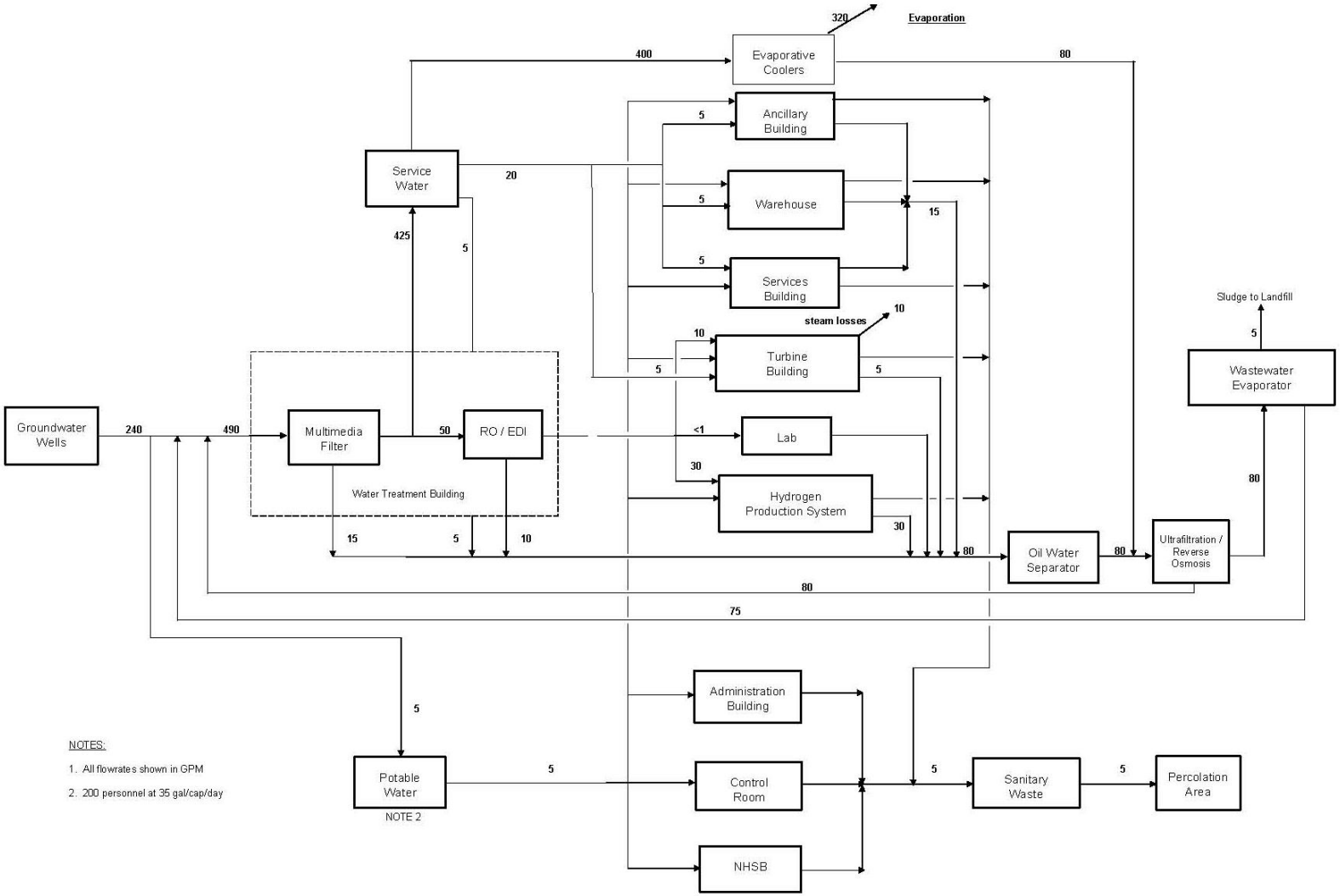

Figure 9-2: Pre-conceptual Water Balance Diagram

9.2.13.3 Major System Interfaces

The wastewater treatment system interfaces with the following plant systems:

- HPS
- PCS
- Auxiliary Cooling Water Systems
- Plant water
- Demineralized water
- Plant Electrical Distribution System
- CCSS

9.2.13.4 System Operation

Floor drainage from buildings subject to oil contamination flows by gravity to or is collected in sumps and automatically pumped to an oil water separator. Treated oily wastewater overflows to the wastewater sump.

Industrial wastewater is collected in sumps, neutralized if required and automatically pumped to the wastewater sump.

Wastewater sump pumps transfer wastewater at a relatively constant flow rate through the ultra-filter to the reverse osmosis unit. Reverse osmosis feed pumps transfer wastewater through the membranes. Reverse osmosis reject is collected in the evaporator feed tank. Reverse osmosis permeate is collected in a tank and transferred to the service water tank. Evaporator feed pumps continuously transfer wastewater to the evaporator for treatment. Evaporator distillate is collected in a distillate storage tank and automatically pumped to the demineralized water system. Evaporator bottoms are intermittently pumped from the evaporator to a sludge holding tank. Filter press feed pumps pump sludge from the sludge holding tank to the filter press for batch dewatering. Filter press filtrate is collected in a sump and automatically pumped to the evaporator feed tank. Filter press dewatered sludge is sent to a landfill.

9.2.14 Fire Protection System

9.2.14.1 System Functions and Requirements

The design of the fire protection system is based on a defense-in-depth philosophy that includes designing the plant to prevent the potential for fire and the spread of fire within the plant, training of personnel and administrative control of hazardous material and processes, and suitable alarm, detection and suppression systems. The designs of the systems are in accordance with the requirements of the applicable NFPA and U. S. Nuclear Regulatory Commission (USNRC) codes and regulations.

The fire protection system protects the plant from the consequences of fires including assuring that the plant can achieve a safe shutdown condition in the event of a fire. BOP fire protection systems are not relied upon for nuclear safety, however [9-10]. The fire protection systems protect the life of personnel on-site, protect the plant property, help ensure continuous plant availability, and help prevent radioactive or hazardous chemical releases to the environment as the result of a fire.

9.2.14.2 System Description

The fire protection system consists of a central alarm and detection system, a dedicated water supply and distribution system, along with sprinkler and gaseous suppression systems. Water spray is the preferred method of suppression. However, gaseous systems will be considered for areas where water application could result in an unacceptable hazard or equipment damage.

The water for the fire main loop originates in a dedicated supply tank that receives makeup from the plant water system. Water is pumped through the mains by redundant fire pumps, one diesel and one electric. The fire loop will includes hydrants and is designed with sectionalizing valves so that a break in the line will not prevent full water supply to any building.

The detection and alarm system consists of smoke and heat detectors as appropriate, connected to local fire panels in each protected building. The local panels are connected to a main fire alarm control panel located in the control complex.

9.2.14.3 Major System Interfaces

- Plant water system
- Plant Electrical distribution systems
- CCSS
- HVAC system

9.2.14.4 System Operation

The fire detection system is self supervising and also monitors the operation and availability of the fire pumps including the water level in the fire water tank. Fire suppression systems operate automatically or manually in the event to respond to fire. Fire suppression systems are periodically tested as required by NFPA and the authority having jurisdiction.

9.2.15 Environmental Monitoring Systems

9.2.15.1 System Functions and Requirements

The environmental monitoring system provides data necessary to assess the impact of plant effluent releases on the environment as required by regulatory documents. The specific functions include:

- Data collection prior to construction and operation as necessary to establish a baseline in support of the licensing process.
- Collection of meteorological data needed to support analysis of dispersion of radiological effluents during normal and emergency conditions.
- Collection of radiological and non-radiological data needed to evaluate the impact of all liquid and gaseous releases to the environment.
- Provide immediate alarms to the plant control system if the predetermined radiological limits are exceeded.

9.2.15.2 System Description

The systems that make up the environmental monitoring system include the plant meteorological system, the water quality monitoring system, solid waste processing system monitors, and the perimeter radiation sample stations. The Seismic Monitoring System is also included.

9.2.15.3 Major System Interfaces

Major system interfaces include:

- Plant Electrical Distribution
- Radiation monitoring system
- Laboratory facilities
- CCSS
- HVAC system
- Emergency response facilities

9.2.15.4 System Operation

The Environmental Monitoring System operates automatically and continuously to monitor the plant environment. Portions of the system provide automatic alarms while others require periodic collection of samples and/or data logs.

9.2.16 Sanitary Sewer System

9.2.16.1 System Functions and Requirements

The sanitary wastewater is collected from occupied buildings and treated for Biochemical Oxygen Demand (BOD) and suspended solids removal. The system then discharges treated sanitary wastewater to ground water through a percolation pond.

9.2.16.2 System Description

Sanitary wastewater is collected in building lift stations and is pumped to a packaged sanitary wastewater treatment system consisting of an equalization tank, primary clarifier, aeration system, secondary clarifier, effluent filter, chlorine contact tank and aerobic digester. The sanitary wastewater treatment system is sized to support an operating workforce of 200 personnel/day using 35 gallons/capita/ day. The system is a 7000 gallon/day prefabricated, skid mounted system. Treated sanitary wastewater is discharged to a 70 foot x 70 foot percolation area, consisting of perforated distribution piping embedded in pervious material.

9.2.16.3 Major System Interfaces

- Plant Electrical Distribution system
- Potable water

9.2.16.4 System Operation

The Sanitary Sewer System is operated continuously to collect plant effluent. Operator action is required only for maintenance and for periodic removal of collected solids or cleanout as required.

9.2.17 Gas Storage and Supply System

9.2.17.1 System Functions and Requirements

The primary function of the Gas Storage and Supply system is to provide pressure regulated supplies of the various gases needed for cooling, purging, diluting, inerting, and welding. Gasses are also required to support various laboratory procedures

9.2.17.2 System Description

The major items of equipment in the Gas Storage system are the high pressure gas cylinders and the pressure regulators to control and distribute the various gases throughout the plant. The system will be arranged into the following separate subsystems:

- Nitrogen (N_2)
- Hydrogen (H_2)
- Oxygen (O_2)
- Carbon dioxide (CO_2)
- Acetylene (welding)
- Argon (for inert welding service)
- Argon/Methane (for use in radiation detection equipment)

9.2.17.3 Major System Interfaces

- NHSS
- CCSS
- PCS
- HPS
- Radiation monitoring system
- Fire protection system
- Laboratories

9.2.17.4 System Operation

The Gas Storage and Supply system provides pressurized gases for plant operation, and requires no operator action, except to replace gas cylinders as needed.

9.2.18 Laboratories

9.2.18.1 System Functions and Requirements

The radiochemical and chemical analysis of samples obtained from the NHSS is performed in a plant laboratory that is designed and equipped with sensitive analytical equipment. Sampled material, in different physical forms such as solids, gases, aerosols and liquids, is transported to the radiochemical laboratory in the Services Building for analysis.

The radiochemical plant condition and performance are evaluated by analyzing the helium coolant and plant components for contaminants such as fission products, tritium, carbon-14, activated metallic erosion products, contaminated graphite dust and other potentially harmful non-radioactive chemicals such as carbon monoxide, water and hydrogen.

Other typical requirements are the analysis of:

- Water samples from secondary cooling water circuits for radioactive gas content and chemical impurities;
- Liquid samples from effluent streams, originating from decontamination and waste treatment processes, for specific radio-nuclides prior to the authorization for release into the environment.

The main purpose of the above analyses is to check for deviations from operational parameters that may affect plant and environmental safety.

The primary functions of the laboratories are:

- To provide plant support services for routine analysis required for personnel protection, surveys, and related health physics activities.
- To provide normal and post accident cold chemical analysis on required plant chemistry samples.
- To provide normal and post accident cold chemical analysis on all plant radioactivity samples.
- To provide grab sample analysis used to check on the accuracy of continuous on-line process monitoring instrumentation.
- To provide a facility to store radioactive calibration and check sources and instruments undergoing calibration, maintenance, or repair.

9.2.18.2 System Description

The plant laboratories include an analytical chemistry laboratory and a radiochemistry laboratory. These laboratories provide a support service to analyze plant systems and environmental samples to determine if system parameters or effluent releases are being maintained within technical specifications. In addition, laboratory samples and diagnostics are

needed to check and evaluate the performance of other plant equipment to determine if calibration, maintenance, or repairs are needed. Radiochemistry laboratories are located in the Services Building.

9.2.18.3 Major System Interfaces

The primary interfaces of the laboratories are:

- NHSS sampling system
- Radiation monitoring system
- Environmental monitoring systems
- Demineralized water system
- HVAC system
- Instrument air system
- Waste Handling System

9.2.18.4 System Operation

The laboratories are operated as needed for sample analyses and performance evaluation, in support of plant or equipment operation.

9.2.19 Auxiliary Boiler System

9.2.19.1 System Functions and Requirements

The auxiliary steam system provides low pressure steam to various plant equipment during periods when PCS is not operating and extraction steam is not available. Systems and equipment served include:

- PCS
- Space heating (HVAC)
- Hot water heating

9.2.19.2 System Description

The system includes a packaged steam boiler, deaerator, feed pumps, chemical control system, boiler blow-down system, and other auxiliaries as required. Boiler fuel is either oil or gas as determined in the conceptual design process.

9.2.19.3 Major System Interfaces

The auxiliary boiler system interfaces with the following systems:

- Plant Electrical Distribution System
- Demineralized water
- PCS
- HVAC (heating water)
- CCSS

9.2.19.4 System Operation

The Auxiliary Boiler operates during plant startup to heat up the PCS system and provide building heating as needed. If the PCS is operating, the Auxiliary Boiler remains in a standby mode.

9.2.20 Storm Water System

9.2.20.1 System Functions and requirements

The storm water system receives runoff from clean areas on the plant site such as paved areas, lay-down areas, grassy areas and roofs. Water is collected in roof drains, catch basins and routed by gravity to a storm water detention pond. A storm water management plan will be developed that ensures that water contaminated by oil or chemicals is not discharged but is process in the waste water treatment system.

9.2.20.2 Systems Description

The storm water system includes roof drains, down spouts, catch basins, manholes, drain piping, culverts, curbs and dikes, to carry the water by gravity to a detention pond on the northeast end of the site. Large storm water drain lines are provided with bars to prevent unauthorized intrusion.

9.2.20.3 Major System Interfaces

- Buildings
- Yard Structures
- Security System

9.2.20.4 System Operation

The storm water system contains passive components and operates continuously to collect and transport storm water. Operator action is not required.

9.3 SYSTEM DESIGN DEVELOPMENT NEEDS

No system design development needs are anticipated. All BOP systems will operate under nominal pressure/temperature conditions and allow the use of proven technology currently being used in process and industrial applications. In addition, components required for the systems are readily available and require no design development.

9.4 COMPLEXITY, RISK, AND FUTURE STUDIES

9.4.1 Complexity and Risks

As stated in 9.3 above, the BOP systems utilize only proven technology based on existing process and industrial practices. There are no complexity or risk issues identified for the BOP systems. The CCSS and Plant Electrical Distribution System have significant interfaces with the other major plant systems, The components of these systems are commonly utilized in current power and process applications, and do not represent a unique risk in of themselves.

9.4.2 Future Studies

Water and Waste Water System Optimization Trade Study

It is recommended that a trade study be performed in the conceptual design phase to optimize the approach to water and waste water usage, treatment and disposal. This recommendation is based on the assumption the NGNP will be a zero liquid discharge site, and large amounts of water are required for make up and cooling of HPS , PCS, and BOP systems. Treatment is required for process discharge and blow-down from these systems.

Control System Architecture

It is recommended that a study be conducted to investigate costs, safety and benefits of an integrated vs. distributed control system and the locations for various system control functions throughout the plant site to satisfy operational and safety needs of the NHSS, PCS, HPS, and BOP systems.

9.5 REFERENCES

[9-1] 10CFR73.55, Requirements For Physical Protection Of Licensed Activities In Nuclear Power Reactors Against Radiological Sabotage
[9-2] International Plumbing Code (IPC)
[9-3] DOE/NP-0014, Environmental and Other Evaluations of Alternatives for Siting, Constructing and Operating New Production Reactor Capacity Vol. 1, 2 and 3
[9-4] ASHRAE 62, Ventilation for Acceptable Indoor Air Quality
[9-5] National Fire Protection Association (NFPA) Codes and Standards
[9-6] ANSI/ISA-7.0.01, Quality Standard for Instrument Air
[9-7] CGA-7.1, Compressed Gas Association Standard
[9-8] Advanced Light Water Reactor Utility Requirements Document," Volume 1-Rev. 2, Volume 2-Rev. 8, Volume 3-Rev. 8, March 30, 1999, Electric Power Research Institute (EPRI).
[9-9] 10CFR100, Reactor Site Criteria
[9-10] PCDR Section 3 Plant Level Design Integration Para. 1.1.3,1.1.4
[9-11] PCDR Section 3 Plant Level Design Integration Para. 1.3.4

LIST OF ASSUMPTIONS

9.1 There is zero discharge of liquid waste water.
9.2 Solid waste is transported off site to existing INL facilities.

APPENDICES

APPENDIX 9A DRAWINGS

See PDF file provided on CD:

NGNP-06-DWG-001 - One Line Diagram

APPENDIX 9B FINAL DESIGN REVIEW PRESENTATION TO BEA

Section 9
Balance of Plant Systems

Section 10
Site, Buildings and Structures

Peter Wells

Preconceptual Design Report
90% Design Review

May 8-10, 2007

P B M R

Westinghouse NGNP Team

NGNP Site, Buildings, BOP, Security

- Site, Buildings, and Structures – Section 10
  - Site Plan, Plot Plan, and Commercial Site Key Plan
  - General Arrangements
  - Site Development Description
  - Building Descriptions
- Overall Site Security Features
- Balance of Plant Systems – Section 9
  - BOP System Descriptions
  - Electrical One Line
  - Water Balance
  - Control Block Diagram

P B M R

Site Development

- NPR site selected
- Geotechnical data obtained in the NPR program
- Lava fields with rock at the surface, and sedimentary layers
- Dry Site with Snake River Aquifer at about 150 meters depth
- 2 meters of fill over entire site for utilities
- Blasting required for partially buried Nuclear Heat Supply Building (NHSB)
- Site plan topographical data taken from NPR site plan
- Seismic data provided by BEA indicate that INL ground level acceleration is less severe than enveloping ground level response acceleration identified in top level requirements Section 2
- Orientation based on prevailing wind from the Southwest
- Site arranged to allow slide along expansion to commercial scale
- Hydrogen production separated from NHSF (~350 meters as shown)
- Railroad spur and road from INTAC to the west
- Road from SPERT area to the south.

Plot Plan

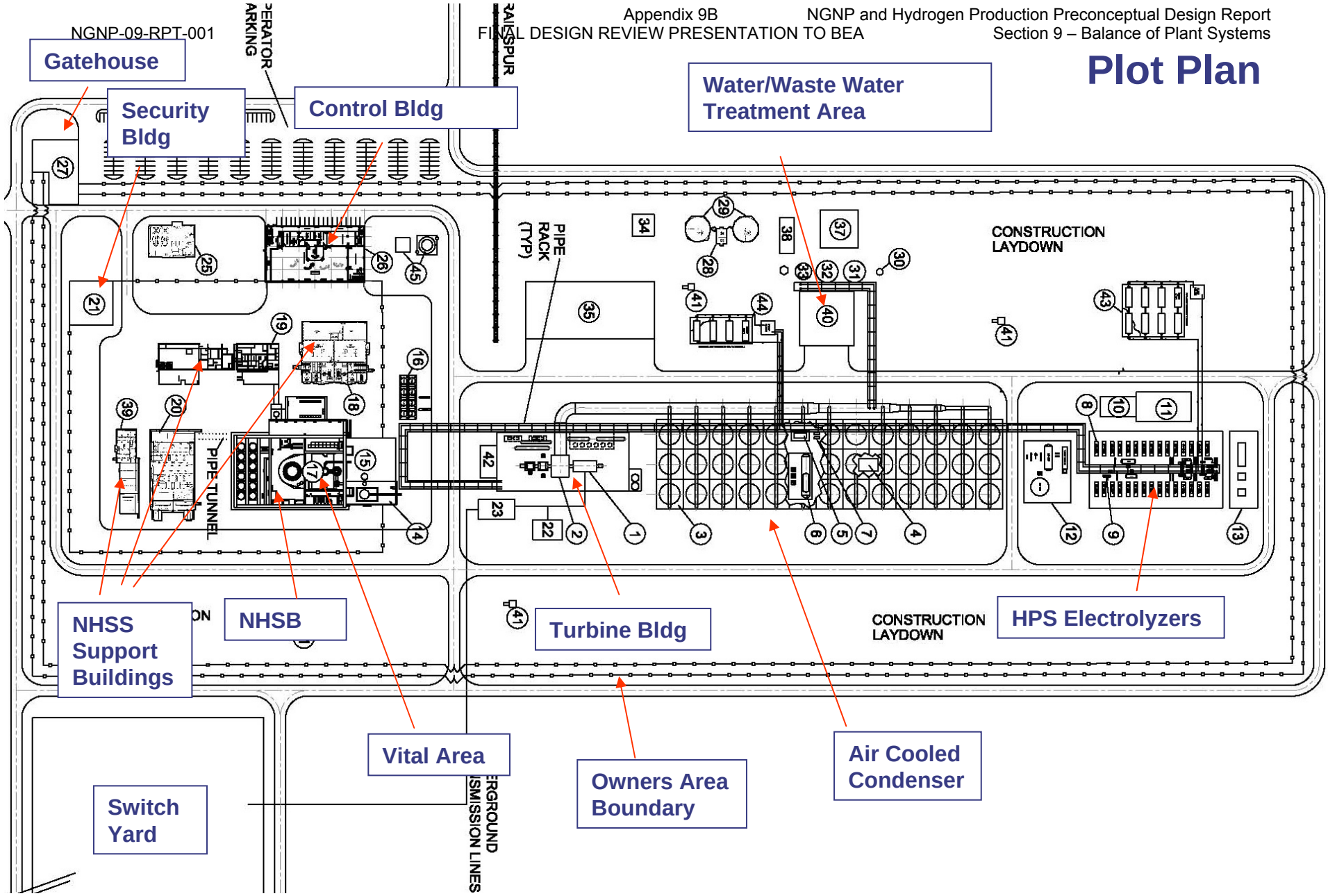
Gatehouse
Security Bldg
Control Bldg
Water/Waste Water Treatment Area
CONSTRUCTION LAYDOWN
PIPE RACK (TYP)
PIPE TUNNEL
NHSS Support Buildings
NHSB
Turbine Bldg
CONSTRUCTION LAYDOWN
HPS Electrolyzers
Vital Area
Owners Area Boundary
Air Cooled Condenser
Switch Yard

P B M R

Overall Site Security

- Owners Area Access Control
  - Gatehouse with access portal
  - Outer nuisance fence
  - Inner fence with intrusion detection
  - All private vehicle parking outside fence
- Nuclear Controlled Area
  - Delay Fence
  - Nuclear badging and escort required with controlled access through Security Building and Control Building
- Vital Areas
  - NHSB access through the Services building.
  - Secondary Alarm Station (SAS) and Central Alarm Station (CAS)
  - Main Control Room is not in vital area

P B M R

Commercial Site Key Plan

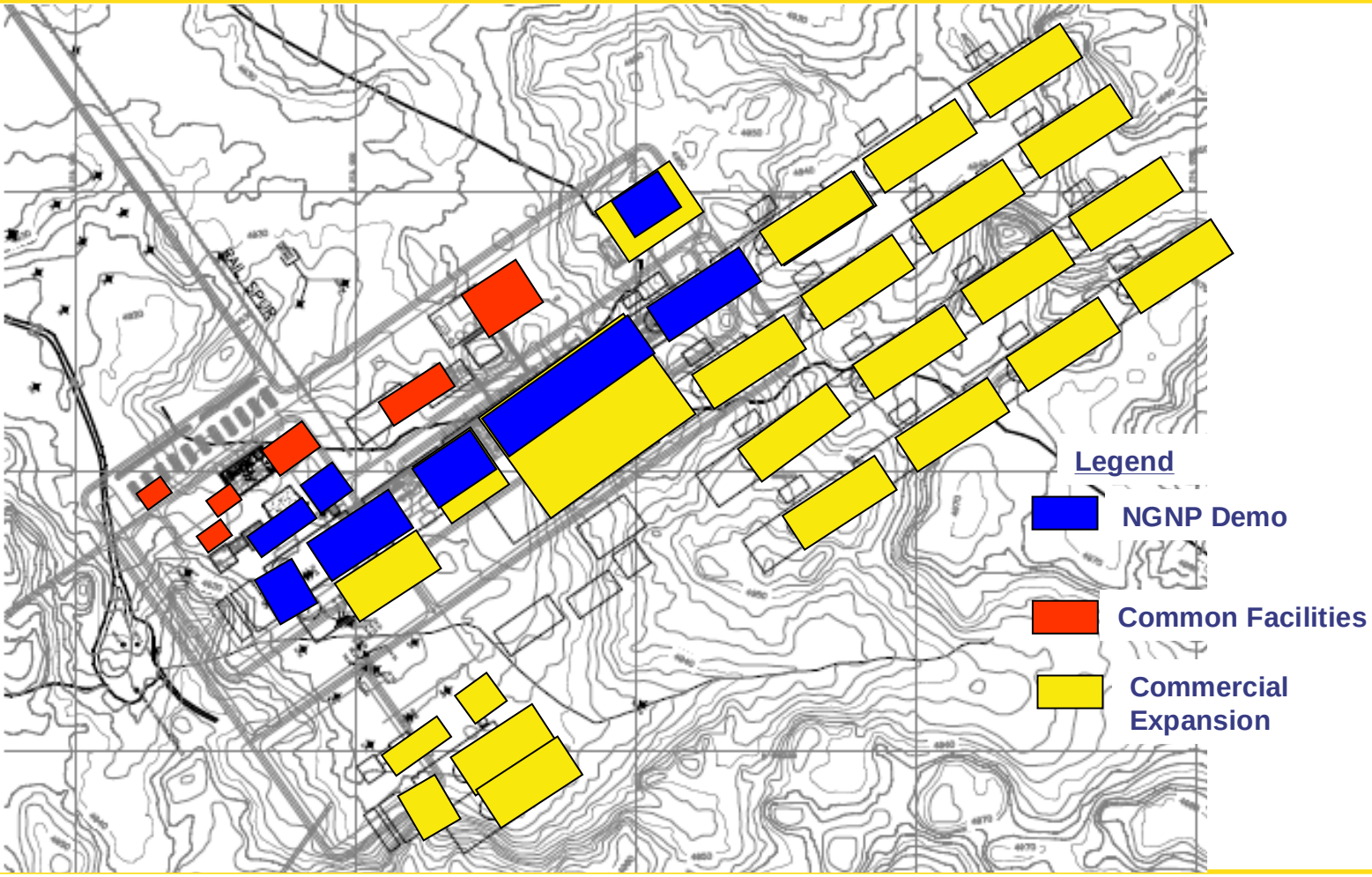

Slide 6

Westinghouse NGNP Team

P B M R

Major Buildings

- DOE 1020 Natural Phenomena Hazard Performance Categories (PC) used per agreement by WEC Team and BEA
- NHSB reinforced concrete constructed to high risk (PC-3) Nuclear Standards
- All other buildings constructed to industrial standard (PC-1 or 2)
- Steam generator and HPS acid decomposer buildings adjacent to NHSS
- Services building houses health physics, waste handling and radiological (hot) laboratory
- Ancillary Building Houses Standby Diesels, Compressors, Chillers, Switchgear
- Cooling Water Plant Building houses, NHSS cooling pumps, HX, Switchgear
- Control Building houses Main Control Room, operations support, Utilities
- PCS Turbine Building houses STG, FW Heaters / Pumps, Condensate Polishers
- HPS Electrolyzer area houses absorbers, electrolyzers, HPS control room, and electrical building

P B M R

Other Buildings

- Water/Waste Water building houses demineralizers, evaporator, filter press
- Security Building for nuclear safeguards and security
- Administration building for offices, simulator
- Gatehouse for site access control
- Warehouse

NGNP Site and Nuclear Heat Supply Building

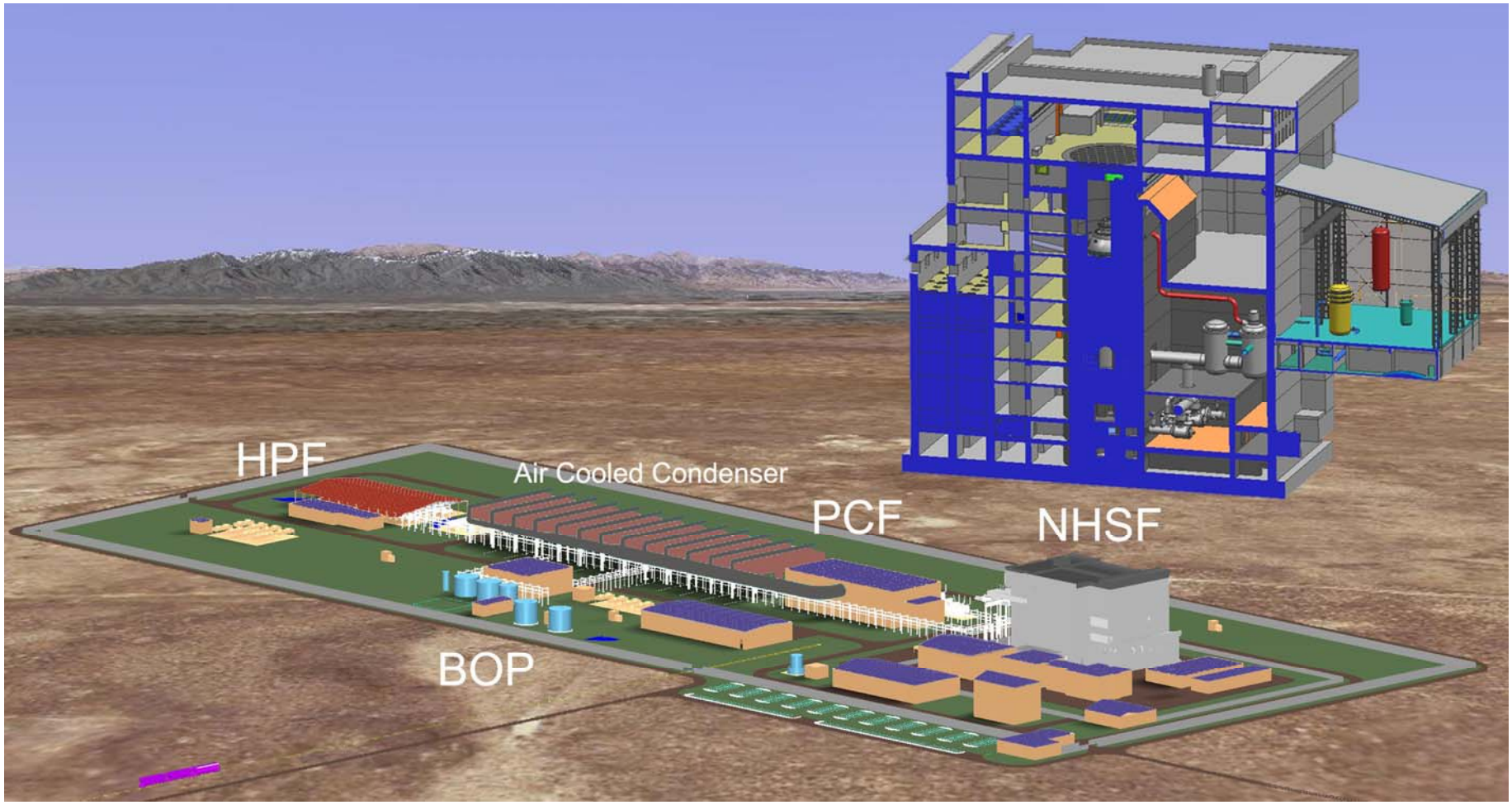

Slide 9

Westinghouse NGNP Team

Nuclear Heat Supply Building

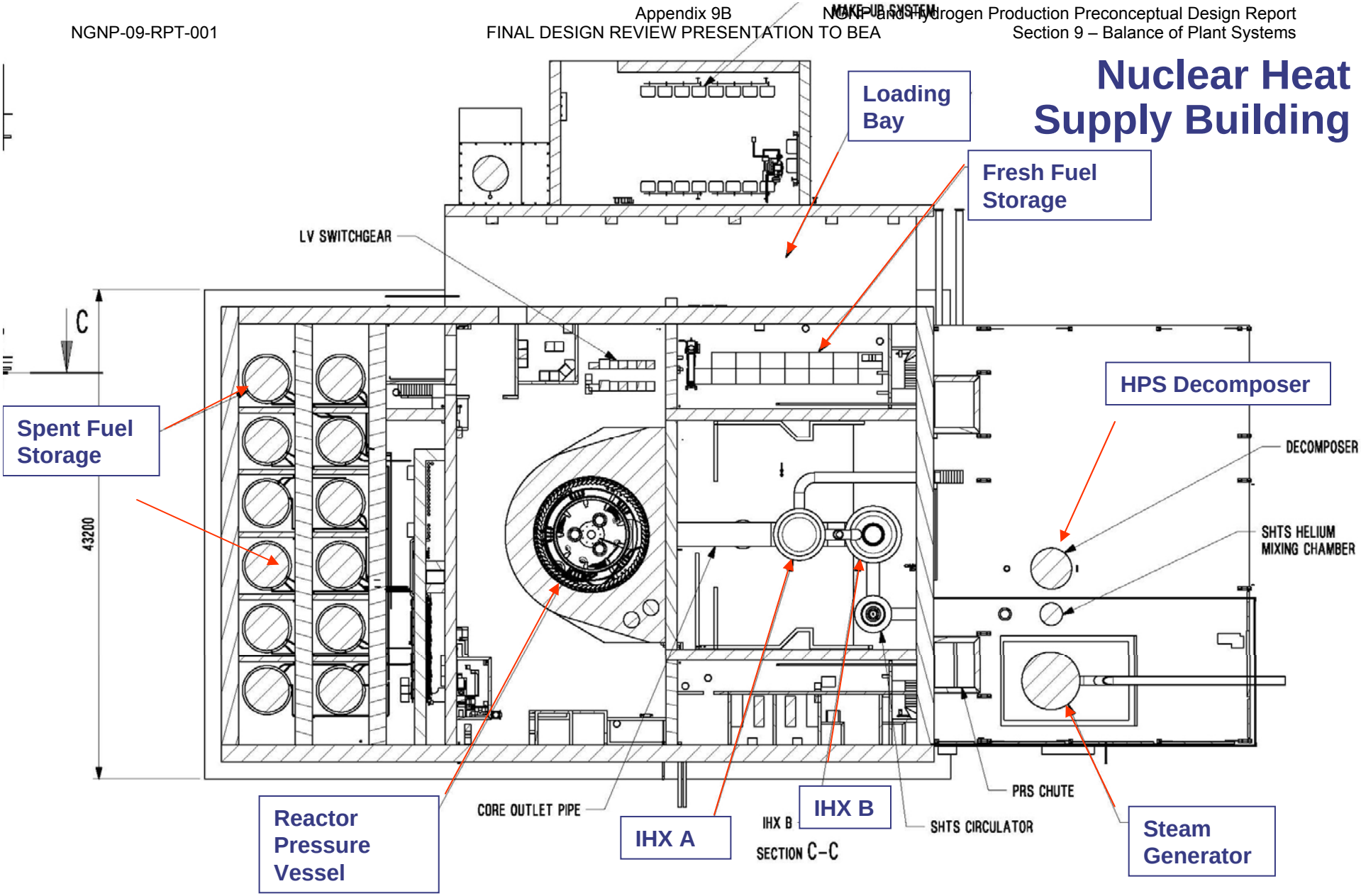

P B M R

Balance of Plant System

- The preconceptual descriptions of BOP systems are included in Section 9 of the PCDR
- Major equipment and systems is sized based on needs to support other facilities (NHSS, PCS, and HPS)
- Focus on rough physical dimensions for input to plant layout
- Estimates of capacity to support cost estimating
- Electrical one line to identifies major electrical components
- Water balance provided to identify make-up and waste water treatment needs
- Control system block diagram to identify interfaces and estimate I/O count for cost estimate.
- Future studies identified for significant cost elements

P B M R

Balance of Plant Systems

- **Plant Control and Instrumentation Systems**
  - **Central Control and Supervisory System is a Distributed Control System with Displays in the Main Control Rooms. A block diagram is provided.**
  - **The Radiation Monitoring System**
    - **Air Monitoring**
    - **Process Effluent Monitoring**
  - **Plant Communication System; PBX, Telephone/Page, Telephone/Page, Etc**
  - **Security System; intrusion detection, CCTV, dedicated back-up power supply, etc.**
- **Plant Electrical Distribution System**
  - **One line provided**
  - **High voltage 230 kV to the grid at Antelope substation**
  - **13.8 kV to high voltage motors, and transformers.**
  - **4.2 kV to other loads and feeds to smaller motors**
  - **Standby diesels feed essential loads in NHSS, PCS, and HPS (Investment Protection / Non Safety)**

P B M R

Water Systems

- Plant Water System
  - 4 well houses (240 gpm) feed storage tank and other system makeup
  - Recycle water (150 gpm) from waste water to upstream of multimedia filters
- Auxiliary Cooling (Component Cooling) Water System
  - Cooling water for NHSS, PCS, HPS
  - Closed circuit evaporative coolers run wet in summers, dry in winter at <10ºC
- Potable Water System sized for 200 personnel
  - Plumbing fixtures, safety showers, and eyewash stations
- Demineralized Water System
  - Feeds PCS and HPS
  - Reverse Osmosis/ Electrodeionization
- Chilled Water System
  - Water cooled chillers cooled by Auxiliary Cooling
  - Air cooled chillers as needed
  - Propylene glycol for freeze protection

P B M R

Air Systems, Equipment Handling

- **BOP HVAC System**
  - **NHSB HVAC Details in Section 4**
  - **Ventilation in most process, mechanical and electrical areas**
  - **Steam or hot water heating from auxiliary boiler**
  - **Air conditioning in Control Room and other personnel areas**
  - **Contamination control zones in the Services building (Waste Handling and Hot Laboratory)**
- **Compressed Air System**
  - **Instrument Air**
  - **Service Air**
  - **Breathing Air for maintenance workers in contaminated areas**
  - **Compressors located in Ancillary Building and Turbine Building**
- **Equipment Handling System**
  - **Bridge cranes in SG Building , Acid Decomposer, and Turbine Building**
  - **Hoists, monorails, jib cranes, fork lifts, as required**

P B M R

Waste Systems

- Decontamination System
  - Vacuum Cleaning
  - Dry Ice Cleaning
  - Hand Wipe Cleaning
  - Wet Abrasive Blasting
- Waste Handling Systems
  - In Drum Compactors
  - Liquid Solidification
  - Resin and Dust Immobilization Equipment
  - Waste storage Areas in Services Building
- Wastewater Treatment System
  - Oil Water Separators
  - Ultra-filtration / Reverse osmosis 160 gpm, 80 gpm recycles to Plant Water
  - Wastewater Evaporator handles 80 gpm, 75 gpm recycles to Plant Water
  - Filter Press for sludge handles 5 gpm liquid

P B M R

Other BOP Systems

- Fire Protection System
  - Early warning detection, wet sprinklers, preaction, gaseous suppression
  - Yard loop with dedicated storage tanks, electric pump, and diesel pump
- Environmental Monitoring Systems
  - Pre construction data collection
  - Meteorological data to support radiological dispersion analysis
  - Data to assess gaseous and liquid releases
  - Alarms to the Main Control Room
- Sanitary Sewer System (Packaged Treatment and Percolation Pond)
- Gas Storage and Supply System (High pressure and liquid storage)
- Laboratories (Hot Lab in Services Building
- Auxiliary Boiler (Startup, and Building Heating)
- Storm Water System (Detention pond)

P B M R

Conceptual Design Future Studies

- **Geotechnical Data Review to review the validity and applicability of the available geotechnical data obtained in the NPR program and by others for the INL site to determine the extent that additional geotechnical investigations including new borings and topographical surveys are required .**

- **Seismic Design Methodology Review to review and verify validity and applicability of existing Probabilistic Seismic Hazard Analysis (PSHA) data to determine the extent that site specific PSHA may or may not be required.**

- **Major Equipment Transportation Trade Study of the transportation routes and size constraints on transport of large components such as the reactor, and steam generator, and potential modularization for major components.**

- **Modularization Study to evaluate alternative construction techniques that could potentially improve the schedule and cost.**

P B M R

Conceptual Design Future Studies

- **Nuclear Heat Supply Building Foundation Study to identify all applicable requirements and regulatory sources pertaining to the protection of the Nuclear Heat Supply System to assess alternatives for burying or not burying the NHSB.**

- **Hydrogen and Nuclear Heat Supply System Separation Study to assess advantages and disadvantages of separating HPS from NHSS. This study will verify that adequate separation and protection from hazards associated with handling of hydrogen is provided, with respect to safety and security of the NHSS.**

- **Water Waste Water System Optimization Trade Study to optimize the approach to water and waste water usage, treatment and disposal. This recommendation is based on the assumption the NGNP will be a zero liquid discharge site, and large amounts of water are required for make up and cooling of HPS , PCS, and BOP systems.**

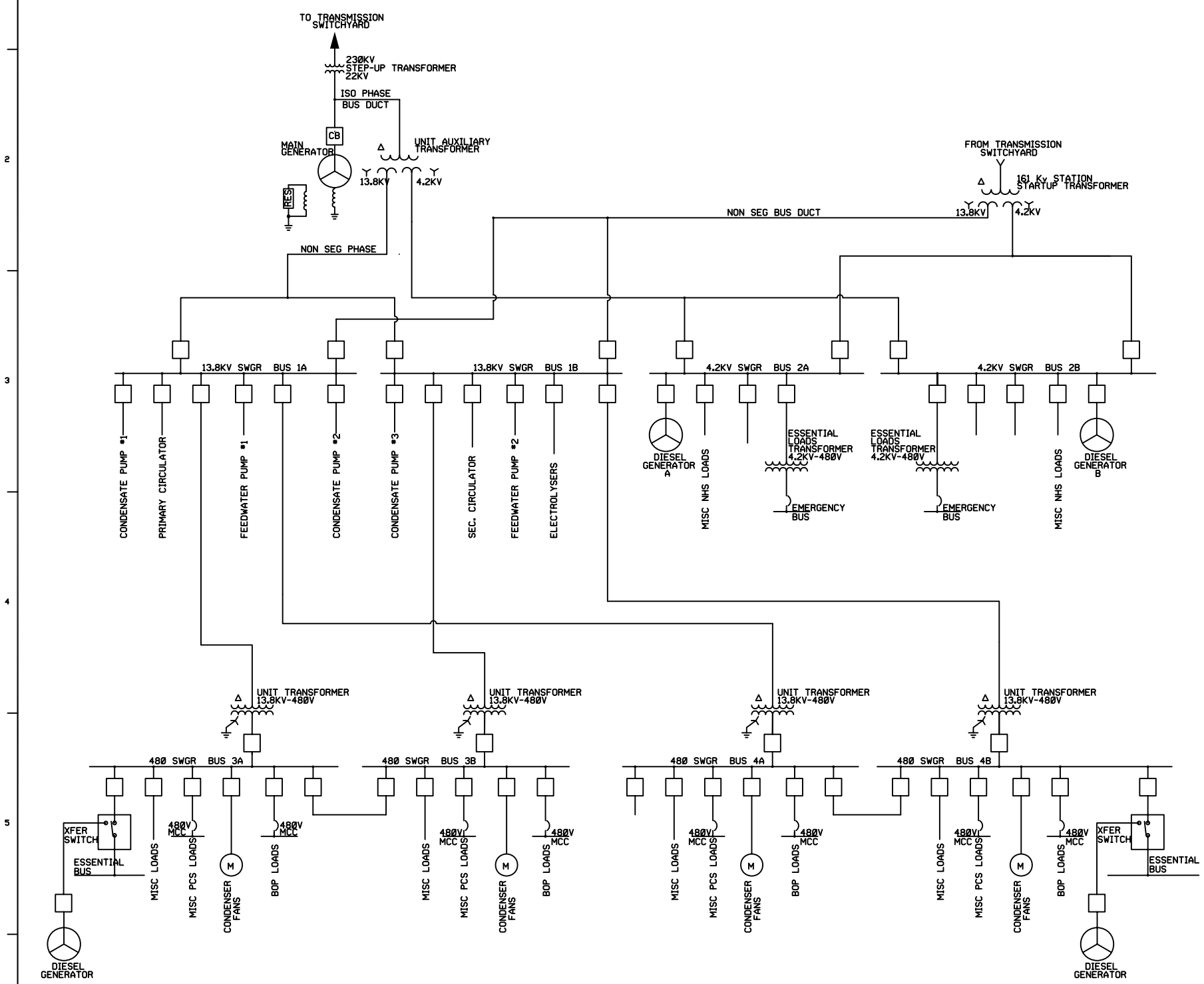

SYMBOLS

- GENERATOR
- MOTOR
- TWO WINDING TRANSFORMER
- THREE WINDING TRANSFORMER
- POWER CIRCUIT BREAKER
- MOLDED CASE CIRCUIT BREAKER

NO	DATE	ISSUE DESCRIPTION	BY	CHKD	DISCP	APPR
X						

CLIENT

BATTELLE ENERGY ALLIANCE
PBMR NGNP WITH HYDROGEN PRODUCTION
IDAHO NATIONAL LABORATORY

TITLE

ONE-LINE DIAGRAM

Shaw Environmental, Inc.

DESIGNED BY | DRAWN BY | CHECKED BY

RESP. ENGR. | CERT. FOR CONST.

SCALE	CLIENT JOB NUMBER	DATE
		4/4/2007

S & W J.O. NUMBER	DRAWING NUMBER	REV NO
123910	NGNP-06-DWG-001	A

DRAWING NUMBER NGNP-06-DWG-001 REV NUMBER A

NGNP-10-RPT-001 **May 2007**
Revision 0

NGNP and Hydrogen Production Preconceptual Design Report

SECTION 10: SITE, BUILDINGS AND STRUCTURES

Revision 0

APPROVALS

Function	Printed Name and Signature	Date
Author	Peter D. Wells, P.E. Shaw, Environmental and Infrastructure, Inc.	May 24, 2007
Reviewer	Richard F. Gauthier, P.E. Shaw, Environmental and Infrastructure, Inc	May 24, 2007
Approval	Edward J. Brabazon, P.E. Shaw, Environmental and Infrastructure, Inc	May 24, 2007

Westinghouse Electric Company LLC
Nuclear Power Plants
Post Office Box 355
Pittsburgh, PA 15230-0355

©2007 Westinghouse Electric Company LLC
All Rights Reserved

LIST OF CONTRIBUTORS

Name and Organization	Date
William Palmieri Shaw E&I, Inc.	May 2007
Paul Trudeau Shaw E&I, Inc.	May 2007

BACKGROUND INTELLECTUAL PROPERTY

Section	Title	Description
NONE		NONE

REVISION HISTORY

RECORD OF CHANGES

Revision No.	Revision Made by	Description	Date
0	Peter D. Wells, P.E. Shaw Environmental, Inc.	Initial Issue	May 24, 2007

DOCUMENT TRACEABILITY

Created to support the following Document(s)	Document Number	Revision
NGNP and Hydrogen Production Preconceptual Design Report	NGNP-01-RPT-001	0

TABLE OF CONTENTS

LIST OF TABLES **10-6**

LIST OF FIGURES **10-7**

10 SITE, BUILDINGS AND STRUCTURES **10-8**

SUMMARY AND CONCLUSIONS **10-8**

INTRODUCTION **10-11**

10.1 GENERAL OVERVIEW AND NGNP PLANT SITE DEVELOPMENT **10-12**

10.1.1 Site Plan **10-12**

10.1.2 Land and Improvements **10-14**

10.1.3 Plot Plan **10-17**

10.1.4 Key Plot Plan Considerations **10-17**

10.1.5 Roads, Parking and Paving **10-18**

10.1.6 Utilities **10-18**

10.1.7 Transportation **10-19**

10.2 BUILDINGS AND STRUCTURES **10-20**

10.2.1 Nuclear Heat Supply Building **10-20**
10.2.1.1 Building Functions and Requirements 10-20
10.2.1.2 Building Description 10-21

10.2.2 Hydrogen Production System Acid Decomposer Building **10-24**
10.2.2.1 Building Functions and Requirements 10-24
10.2.2.2 Building Description 10-24

10.2.3 Hydrogen Production System Absorber and Electrolyzer Area **10-25**
10.2.3.1 Building Functions and Requirements 10-25
10.2.3.2 Building Description 10-26

10.2.4 Hydrogen Production System Auxiliary Area **10-26**
10.2.4.1 Building Functions and Requirements 10-26
10.2.4.2 Building Description 10-27

10.2.5 Steam Generator Building **10-27**
10.2.5.1 Building Functions and Requirements 10-27
10.2.5.2 Building Description 10-28

10.2.6 Power Conversion System (Turbine) Building **10-29**
10.2.6.1 Building Functions and Requirements 10-29
10.2.6.2 Building Description 10-29

10.2.7 Condenser Area **10-30**
10.2.7.1 Building Functions and Requirements 10-30
10.2.7.2 Building Description 10-30

10.2.8 Control Building **10-31**
10.2.8.1 Building Functions and Requirements 10-31

10.2.8.2 Building Description....10-31

10.2.9 Ancillary Building 10-32
10.2.9.1 Building Functions and Requirements....10-32
10.2.9.2 Building Description....10-33

10.2.10 Services Building 10-33
10.2.10.1 Building Functions and Requirements....10-33
10.2.10.2 Building Description....10-34

10.2.11 Cooling Water Plant Building 10-35
10.2.11.1 Building Functions and Requirements....10-35
10.2.11.2 Building Description....10-36

10.2.12 Water/Waste Water Treatment Building....10-36
10.2.12.1 Building Functions and Requirements....10-36
10.2.12.2 Building Description....10-37

10.2.13 Sewage Treatment Building....10-37
10.2.13.1 Building Functions and Requirements....10-37
10.2.13.2 Building Description....10-37

10.2.14 Administration Building 10-38
10.2.14.1 Building Functions and Requirements....10-38
10.2.14.2 Building Description....10-38

10.2.15 Security Building 10-39
10.2.15.1 Building Functions and Requirements....10-39
10.2.15.2 Building Description....10-39

10.2.16 Warehouse....10-40
10.2.16.1 Building Functions and Requirements....10-40
10.2.16.2 Building Description....10-40

10.2.17 Other Buildings and Structures 10-41

10.3 DESIGN DEVELOPMENT NEEDS....10-42

10.4 COMPLEXITY, RISK AND FUTURE STUDIES 10-42

10.4.1 Complexity and Risks....10-42

10.4.2 Future Studies....10-42

REFERENCES....10-44

LIST OF ASSUMPTIONS....10-46

APPENDICES....10-47

Appendix 10A Drawings....10-47

Appendix 10B Final Design Review Presentation to BEA 10-48

LIST OF TABLES

Table 10.1-1: DOE-STD-1020-2002 Table 2-1 10-15
Table 10.1-2: INL Peak Ground Acceleration 10-16
Table 10.2-1: Other Buildings and Structures 10-41

LIST OF FIGURES

Figure 10.1-1: Location of NPR Site 10-13
Figure 10.2-1: Nuclear Heat Supply Building 10-23
Figure 10.2-2: HPS Acid Decomposer Building 10-25
Figure 10.2-3: Steam Generator Building 10-28

10 SITE, BUILDINGS AND STRUCTURES

SUMMARY AND CONCLUSIONS

Section 10.1 addresses the NGNP site selection process and characteristics as well as arrangement of buildings and systems. A Plot Plan showing the arrangement of buildings and systems has been developed and is included in Appendix 10A. A site key plan is also included in Appendix 10A. This drawing shows the plot plan super-imposed on the New Production Reactor (NPR) site and indicates approximate locations where NPR boring data was taken. This drawing shows location of proposed roads, railroads spur, and transmission lines, subject to development in conceptual design. A commercial site key plan is included to show the potential arrangement of a commercial scale plant with four NHSS modules and sixteen Hydrogen Production System (HPS) modules.

Key considerations in the development of the plot plan are:

- The Nuclear Heat Supply Building (NHSB) is based on development by PBMR of the Demonstration Power Plant (DPP) and The Process Heat Plant (PHP) designs already in progress.
- The Location of the Hydrogen Production System (HPS) Acid Decomposer and Power Conversion System (PCS) Steam Generator is kept close to the NHSB to minimize helium piping length.
- The NHSB is partially embedded into the rock site to provide a stable foundation and to reduce seismic amplified response. A future study is recommended to optimize the depth of bury taking into consideration, seismic design, and requirements to protect the Nuclear Heat Supply System (NHSS) from natural and manmade phenomena.
- The portions of the HPS handling hydrogen are located at least 100 meters away from the NHSB, based on review of Reference [10-6]
- Non-nuclear Structures, Systems, and Components (SSC) are placed outside security areas as required by 10CFR73 [10-18].
- The Control Building is located upwind and separated from chemical locations.
- The layout accommodates adaptation to commercial scale by use of multiple trains using a slide along arrangement, or expansion of single systems where appropriate.

It is expected that site specific seismic spectra to be developed for the project are less severe than bounding seismic response spectra identified in [10-19]. Investigations are required in conceptual design to establish detailed seismic design criteria and approaches based on current U.S Nuclear Regulatory Commission (USNRC) and U.S. Department of Energy (DOE) adopted

methodologies. Geotechnical investigations to supplement existing NPR data are also anticipated for the conceptual design phase.

The selection of the NPR site is based primarily on maximizing the distances from site boundaries, volcanic areas, and existing Idaho National Laboratories (INL) facilities. This rational is documented in the NPR site selection report [10-3].

It is noted that the Advanced Test Reactor (ATR) is now located on the INL site. That facility has an Exclusion Population Zone (EPZ). The NPR site falls within this EPZ. BEA will review this concern and provide direction as required to proceed with conceptual design.

The NPR site is located far enough from the other facilities at INL that it requires new self contained utilities, with the exception of electric power.

Adequate electric power needed for construction is available from the CFA substation at Scoville. Connection to the "grid" for power generated by the NGNP requires a major new substation and transmission capacity interface with the CFA substation at Antelope.

Section 10.2 includes functions and requirements and a description of the arrangement and key considerations for the Buildings and Structures included in the NHSS, PCS, Hydrogen Production System (HPS), and Balance of Plant Systems (BOP).

The NHSB is an evolution of a design for the DPP currently planned for construction by PBMR in South Africa. The NHSB and support buildings (Ancillary Building, Services Building, Administration Building, and Cooling Water Building) are for the most part the same as functionally similar buildings to be constructed for that project. The PCS arrangement is mainly taken from the Rankine cycle portion of a conventional combined cycle power plant. The HPS facility building arrangement is original for this project.

Key building features described in this section are occupancy classification in accordance with the International Building Code (IBC) [10-14], Natural Phenomena Hazard Category per DOE 1020 STD 1020, [10-10], building sizing and type of construction used in cost estimating, security requirements, fire protection, and safety hazard concerns.

The following buildings are addressed:

Nuclear Heat Supply Buildings and Structures

- Nuclear Heat Supply Building

Hydrogen Production Buildings and Structures

- Acid Decomposer Building
- Absorber and Electrolyzer Area
- HPS Auxiliary Area

- Sulfuric Acid Storage and Receiving Area
- HPS Control Building
- HPS Electrical Building

Power Conversion Buildings and Structures

- Steam Generator Building
- PCS (Turbine Building) Building
- Aux Steam Boiler Room
- Condenser Area

Balance of Plant Buildings and Structures

- Control Building
- Ancillary Building
- Services Building
- Cooling Water Plant Building
- Water/Waste Water Treatment Building
- Sewage Treatment Building
- Administration Building
- Security Building
- Warehouse
- Other Buildings and Structures
    - Fuel Oil Storage Tank and Pump House
    - Component Cooling Pump Houses
    - Fire Pump house
    - Well Water Pump Houses
    - Switchyard
    - Gate House
    - Hazardous Storage Building

INTRODUCTION

This section addresses the selection and development of the site, the buildings that are arranged on the site, and key parameters that effect the planning and cost estimating process in the pre-conceptual phase of the project. Top level requirements are detailed in Section 2 [10-19], [10-20] and are addressed throughout this section. The NGNP pre-conceptual design comprises major facilities with varying design origin. These entities are the overall site, the NHSS, PCS, HPS, and the BOP.

The NHSB is an evolution of the design for the DPP currently planned for construction by PBMR in South Africa. The reactor building and support buildings (Ancillary Building, Services Building, Administration Building, and Cooling Water Plant Building are functionally similar buildings to be constructed for that project. The Power Conversion System arrangement is mainly taken from the Rankine cycle portion of a conventional combined cycle power plant. The HPS facility arrangement is original for this project. The Balance of Plant (BOP) facilities are selected and arranged based on particular features of the selected site. The NPR site at the INL was selected by DOE for this project as indicated in the contract statement of work.

All acronyms are defined in PCDR Appendix A.

10.1 GENERAL OVERVIEW AND NGNP PLANT SITE DEVELOPMENT

10.1.1 Site Plan

The Site Plan is shown on Drawing NGNP-03-DWG-001 included in Appendix 10A. This drawing shows the plant grid system with Idaho coordinate coordinates based on drawings developed in the NPR program. It shows proposed access roads, and railroads. It also shows locations of existing borings taken for the NPR program and topographical information.

Figure 10.1-1 shows the relative location of the project in relation to adjoining facilities on the INEL reservation as documented in [10-8].

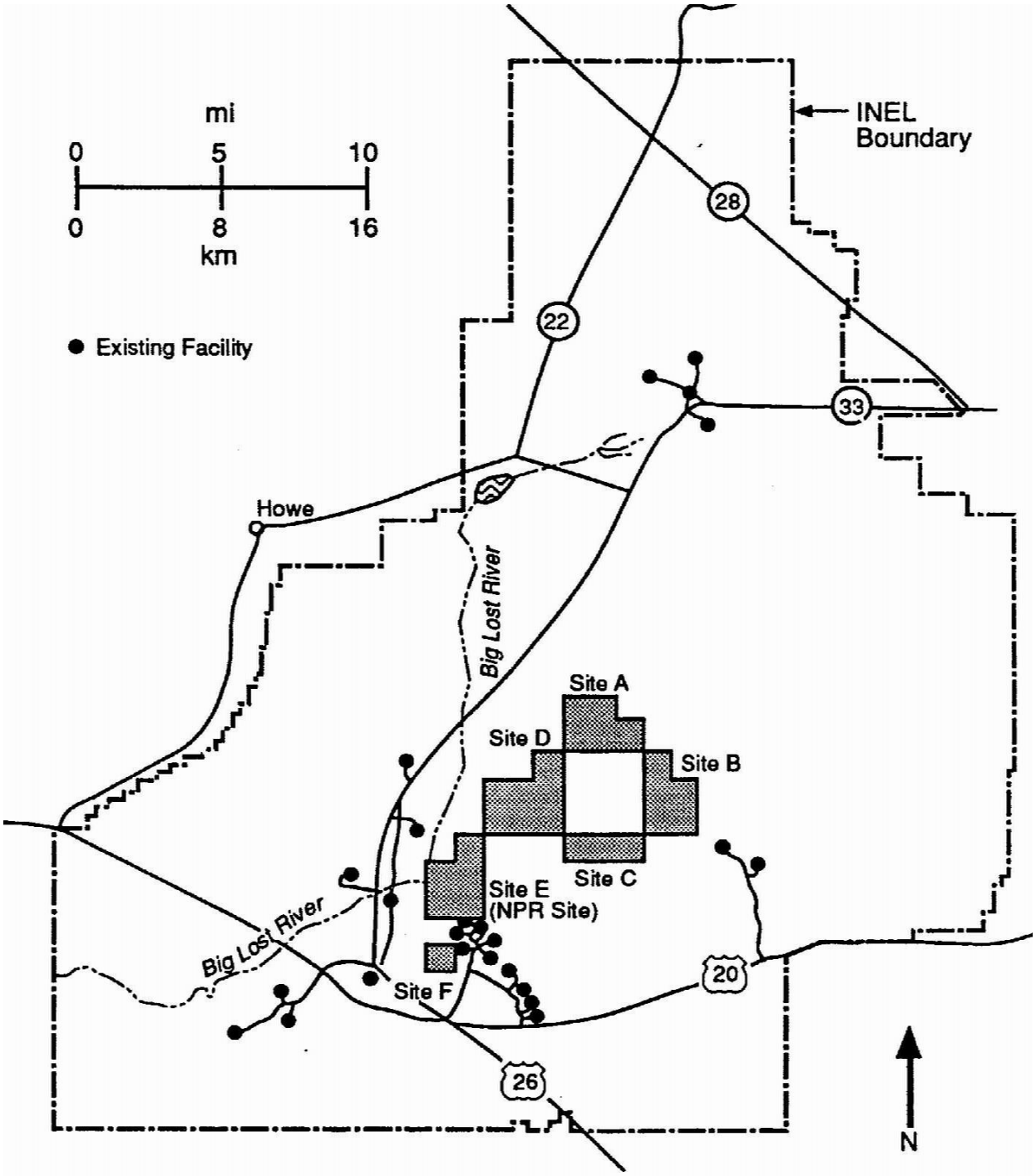

Figure 10.1-1: Location of NPR Site

10.1.2 Land and Improvements

Site Location

The geographical location of the proposed project is defined based on direction by BEA, the NPR site selection report [10-3], and the NGNP PMP [10-1], [10-2]. The bases for site selection include:

- Maintaining the required distance from INL boundaries
- Maximum achievable distance from existing facilities
- Maximum achievable distance from lava flows

Geotechnical Features

The NPR project geotechnical investigations documented in [10-7] indicate the following:

- The depth to the groundwater table is about 450 to 475 feet.
- This is a rock site with relatively thin layers of silt and clay at varying depths. Supplemental geotechnical investigations, including drilling borings, obtaining samples of subsurface materials, performing laboratory tests, field tests, and geophysical investigations, are required during the conceptual design phase of the project to develop site-specific subsurface information for design of the facilities in accordance with recommendations in US NRC regulatory guides. The site-specific data obtained from these investigations also are used to confirm that conditions at the site are consistent with the geotechnical parameters used in developing the design response spectra, identified below, that are recommended for use in seismic design and evaluations of the facilities.
- Typically projects built at INL have chosen to bring in engineered fill and build up the site to facilitate burying of underground structures and utilities. It is anticipated that approximately 5 to 6 feet of fill would be required. This greatly reduces the amount of drilling and blasting required. It is still anticipated that blasting will be required for the NHSB.
- There are no underground obstructions on this “Greenfield” site.
- There is no expected environmental contamination on this “Greenfield” site.

Seismic Design Requirements

The following approach is taken in the pre-conceptual design based on direction from BEA [10-9]. The objective is to differentiate requirements for nuclear grade Structures, Systems and Components (SSC) from requirements for non-nuclear grade SSC.

Seismic design requirements for these facilities are dependent on the Natural Phenomena Hazard (NPH) Performance Categories (PC-0 through PC-4) that are assigned to each structure utilizing the approach described in DOE Guide 420.1-2 [10-12] and DOE-STD-1021-93 [10-13]. Seismic Performance Categories are assigned based on DOE-STD-1020-2002 [10-10], which notes in Table 2-1:

Table 10.1-1: DOE-STD-1020-2002 Table 2-1

DOE-STD-1020-2002

Table 2-1 Seismic Performance Categories and Seismic Hazard Exceedance Levels

Performance Category	Mean Seismic Hazard Exceedance Levels, P_H	Remarks
0	No Requirements	
1	Follow IBC 2000 in its Entirety*	Use IBC 2000 Seismic Use Group I Criteria-2/3 MCE Ground Motion
2	Follow IBC 2000 in its Entirety*	Use IBC 2000 Seismic Use Group III Criteria 2/3 MCE Ground Motion with Importance Factor of 1.5
3	$4x10^{-4}$ ($1x10^{-3}$) [1]	Establish DBE Per DOE-STD-1023 Analysis Per DOE-Std. 1020
4	$1x10^{-4}$ ($2x10^{-4}$) [1]	Establish DBE Per DOE-STD-1023 Analysis Per DOE-Std. 1020

* Based on Maximum Considered Earthquake (MCE) Ground Motion – generally 2% Exceedance Probability in 50 years from the seismic hazard maps, modified to account for site effects. $P_H = 4x10^{-4}$

1 For sites such as LLNL, SNL-Livermore, SLAC, LBNL, and ETEC, which are near tectonic plate boundaries.

Seismic loading is defined in terms of a site-specific design response spectrum (the Design Basis Earthquake, [DBE]). Appendix S [10-9] provides site-specific PC-3 (2,500 years) and PC-4 (10,000 years) rock DBE response spectra in Tables S-1 through S-4 and Figures S-1 through S-4. These response spectra are applicable for seismic design and evaluations of facilities that are located within the shaded portion of Figure S-5 (of Appendix S of STD-116). The NGNP site is located east of the Idaho Nuclear Technology and Engineering Center

(INTEC) and slightly north of the Power Burst Facility (PBF), which is within the shaded portion of Figure S-5; therefore, the PC-3 and PC-4 rock DBE response spectra presented in Appendix S of STD-116 are applicable for design of the NGNP facilities.

As indicated in these tables, the peak ground accelerations (PGA) based on these rock DBE response spectra are as follows:

Table 10.1-2: INL Peak Ground Acceleration

Performance Category	Peak Ground Acceleration, g	
	Horizontal	Vertical
PC-3	0.1230	0.0947
PC-4	0.1870	0.1440

Based on review of the values listed above, it is expected that site specific seismic spectra to be developed for the project will be less severe than bounding seismic response spectra identified in [10-19] developed for the commercial application of the PBMR. Investigations are required in conceptual design to establish detailed seismic design criteria and approaches based on current USNRC and DOE adopted methodologies.

Climatology

A climatology report for the INL site has been provided by BEA [10-5]. A key parameter that affects the development of the site is the prevailing wind direction. The wind blows predominantly from the Southwest. The control building and other continuously occupied areas are located to the southwest upwind of process areas. Temperature data has also been considered in the pre-conceptual design. An extreme hourly wet bulb temperature of 67 ^{o}F is selected for initial sizing of evaporative cooling equipment. A maximum average dry bulb temperature of 59 ^{o}F is used in assessing PCS performance for input to the economic analyses described in Section 16 of this report. PCS systems are sized based on a summer condition of 89°F.

Advanced Test Reactor Location

A potential concern for the proximity of the ATR was identified by BEA and DOE during the 50 percent design review meeting. The NGNP site is apparently located within the ATR Emergency Planning Zone (EPZ). BEA instructed Westinghouse to proceed with the PCDR without specifically resolving this issue.

10.1.3 Plot Plan

The Plot Plan provided on NGNP-03-DWG-002, included in Appendix 10A, shows the relative location of project buildings. It shows:

- Gates and fences
- Tank farms
- Roads and access ways
- Rail facilities
- Green space
- Buildings
- Major Equipment
- Major pipe racks
- Laydown areas
- Construction laydown and fabrication areas
- Major utilities

10.1.4 Key Plot Plan Considerations

Considerations in developing the plot plan layout are as follows:

- The NHSB and NHSS support buildings are designed by PBMR based on development of the DPP. The relative layout is similar.
- The HPS Acid Decomposer Building and PCS Steam Generator Building are located adjacent to the NHSS Building to reduce helium piping length.
- The NHSS building is partially embedded. Additional investigations to optimize this design are recommended in the plan for conceptual design.
- The Hydrogen Production Facility is placed at least 100 meters away from the NHSS area based on review of [10-6].
- Non-Nuclear elements are placed outside the Nuclear Heat Supply Building.
- The Control Room is located away from chemical locations.
- The water treatment areas are located so as to support both the PCS and HPS.
- The plant layout is designed to accommodate adaptation to full commercial scale by use of multiple identical units using a slide-along arrangement. An additional site plan NGNP-03-DWG-003 shows in phantom how this slide along approach would be used.
- Fencing, boundaries and access control points are located to control access to all portions of the site conforming to 10CFR73 [10-18].
- A perimeter boundary including outer nuisance fence and inner fence with intrusion detection is provided to control access to all process areas for safety in accordance with standard industrial practice.

10.1.5 Roads, Parking and Paving

The following features are on the Plot Plan and Site Plan and are considered in the pre-conceptual cost estimate:

- One 3 mile two lane road AASHTO H20 Road runs from the proximity of the INTEC facility west to east to the site.
- One 1.5 mile two lane road AASHTO H20 Road runs from the SPERT facility south to north to the site.
- A 3 mile industrial siding, railroad spur is proposed to extend to the site from the existing rail running east of the INTEC facility.
- Parking is provided outside the perimeter fences for operations and construction forces.
- Construction lay down area is provided in multiple locations.
- The areas around the NHSB and support buildings are paved to facilitate maintenance and to locate additional equipment as it is identified.
- A gravel road circles the perimeter fence to allow routine security inspections.

10.1.6 Utilities

It is not feasible to connect to any existing utilities on the INL site except for electrical power needed during construction. This is a rock site and it is not anticipated that long runs of utility piping and utilities to existing INL facilities are cost effective. This concern will be investigated in the conceptual design phase.

Electric power can be taken from the Central Facility Area (CFA) substation at Scoville. This substation has a total capacity of approximately 150 KVA. Connection to the “grid” for power generated by the NGNP will require major new substation and transmission capacity interfaces with the CFA substation at Antelope.

All other utilities are provided new on site including the following systems. Detailed discussion of these systems is included in Section 9 of the PCDR.

- Potable Water and Non-Potable Water
- Sanitary Sewer System
- Offsite Electric Power (for construction and operations)
- Waste Water Treatment
- Storm Water System

10.1.7 Transportation

Transportation of major equipment such as the reactor vessel and steam generator to the site by a combination of barging to the closest location and then transporting over rail or road has been investigated. It is evident that this approach is very costly due to the extent that modifications to bridges and other road structures are required to accommodate the size and weight of these two components. Discussion on an alternative approach of transporting the major components in transportable pieces and then performing assembly at or the near the site is discussed in Section 16 of this report.

Access roads and a rail spur are laid out on the site plan and plot plan. Detailed studies of the transportation routes and potential modularization for major components are recommended for early in the conceptual design phase as discussed in 10.4.2.

10.2 BUILDINGS AND STRUCTURES

Design Requirements the PBMR NGNP buildings and structures are associated with the design requirements of the systems within a given building or area. The facility design requirements for PBMR NGNP systems are specified in Section 2 of the PCDR (Top Level Requirements), and allocated in Section 3.3. The associated buildings for each system are listed in Section 3, Appendix 10B.

The NHSB is the structure associated with the NHSS. The Top Level Facility Design Requirements for the NHSS including nuclear industry standards and regulations are applied to the NHSB.

Top Level Facility Design Requirements for the HPS are applied to buildings associated with the HPS. Top Level Facility Design Requirements for the PCS are applied to buildings associated with the PCS. Requirements for facilities and the BOP follow commercial and industrial standard practice.

All buildings and areas on the site meet the INL site conditions listed in Table 2.2-1, of Section 2 [10-20] and associated requirements for:

- NGNP site parameters
- External Interfaces
- NGNP Fabrication/Construction: Advanced techniques, e.g. filed-filed fabricated modules, facilitate construction and maintenance
- NGNP Decommissioning

10.2.1 Nuclear Heat Supply Building

10.2.1.1 Building Functions and Requirements

The NHSB provides structural support, confinement of radiological materials and protection from natural hazards for the NHSS. All nuclear safety related NHSS SSC are located in this building. This building is shown on drawings NGNP-04-DWG-001 through 004 included in Appendix 10A.

The NHSB Occupancy Classification per IBC [10-14] is H-4 (High hazard).The NPH Performance Category per DOE-STD-1020 [10-10] is PC-3 (High Risk).

Major systems and components housed in this building include the NHSS, Reactor Unit System, Core Conditioning System, Reactor Cavity Cooling System, Fuel Handling and Storage System, Helium Service System, Heating Ventilation and Air Conditioning (HVAC), and other NHSS support systems. This building also houses a portion of the Heat Transport System

including IHX vessels, circulators and Primary Heat Transport System and Secondary Heat Transport System.

Confinement requirements are identified in Section 4 with the Reactor Building HVAC system. The HVAC system and internal partitions are designed maintain separation of highly contaminated or potentially contaminated compartments from non contaminated or less contaminated compartments. The building is designed to prevent release of all liquids to the environment.

The building is designed to withstand the pressurization effects of a major helium coolant depressurization. The building is also designed for tornado wind loads and missiles, in accordance with USNRC regulatory requirements identified in [10-4]. The potential and consequences of airplane impact are also considered.

The potential for volcanic ash intrusion is addressed in the design of the NHSS HVAC system as discussed in Section 4.

Fire area separation is as determined in the fire hazard analysis to be completed in the preliminary design phase and uses minimum 3 hour separation walls per [10-4].

This building is required to be fully functional in response to design basis events as required in Sections 4, 14 and 17. Key functions include structural integrity to maintain reactor core geometry, and confinement of radiological materials as required, to ensure safety of the public.

This building is considered a Vital Security Area and will require protection in accordance with 10CFR73 [10-18] as outlined in Section 15.

10.2.1.2 Building Description

The NHSB is reinforced concrete structure. The building has a rectangular shape with plan dimensions approximately 90 m x 40 m and an overall height of 67 m above the mat foundation. Figure 10.2-1 shows an elevation view of this structure.

The number of openings from the NHS Building to the environment is limited to minimize the risk of penetration by externally generated missiles. At ground level, openings are provided for egress from the building into the fresh fuel storage area, and the health physics control in the services building. Access to the remote shutdown panel is from the opposite side of the services building. Other openings are required for air intakes and exhausts to the HVAC system, as well as for the passive cooling system for the spent fuel tanks. These are protected by the building structure against external missiles.

The reactor pressure vessel is supported by the reactor cavity walls. The reactor cavity structure is a thick reinforced concrete cylinder. Shielding requirements primarily drive the dimensions of this interior structure.

From a functional perspective, the confinement zone around the citadel forms an essential part of the confinement system. This confinement zone is sealed sufficiently to limit leakage of airborne radiological material. Leakage from the confinement zone through doors, penetrations and hatches is limited to ensure that within this space can be maintained by the HVAC system at an air pressure of less than atmospheric such that air flow is inward, and any air exchange with the environment is through filters.

Adjacent cavities within the citadel are not interconnected during normal operation. In the event of a depressurization of the helium piping pressure boundary, the pressure transients are relieved via the Pressure Relief System (PRS). Burst panels within the PRS open during postulated accidents when the over-pressure in the citadel and confinement zone exceeds the set limit of the burst panels. The release goes up the depressurization shaft, through filters and is released in an upward direction. Detailed discussion of the HVAC and PRS systems is included in section 4.

Small equipment is brought into the controlled zone of the NHSB from the outside at ground floor level via the Health Physics access control, and large equipment through a door in the loading bay.

Four independent staircases and two elevators service the various floor levels. Fire lobbies (Areas of refuge per NFPA 101 [10-15] are provided at the entrances to stairs, elevators and hoists to prevent the spread of smoke from one level in the building to the next. Alternative escape routes are provided to rooms containing redundant SSC.

The NHSB structure is constructed of reinforced concrete and is monolithic; i.e., it has no permanent joints. There are construction joints, which are designed to provide structural continuity. They are able to transmit axial, bending, shear and other actions between the various casts.

The floors in the NHSB are supported by all the walls in contact with them. In the NHSB there are 16 levels, which include the top of the foundation slab and the roof. Not all the floors are continuous throughout the building. However, the floors stiffen the integrated structure. The shear walls are generally continuous throughout the height of the building. Floors are aligned wherever possible to coincide with the supports of the major SSC.

All NHSB rooms are built to a minimum two hour fire rating to ensure that a fire is contained until it can be extinguished. Fire separation walls are be 3 hour rated.

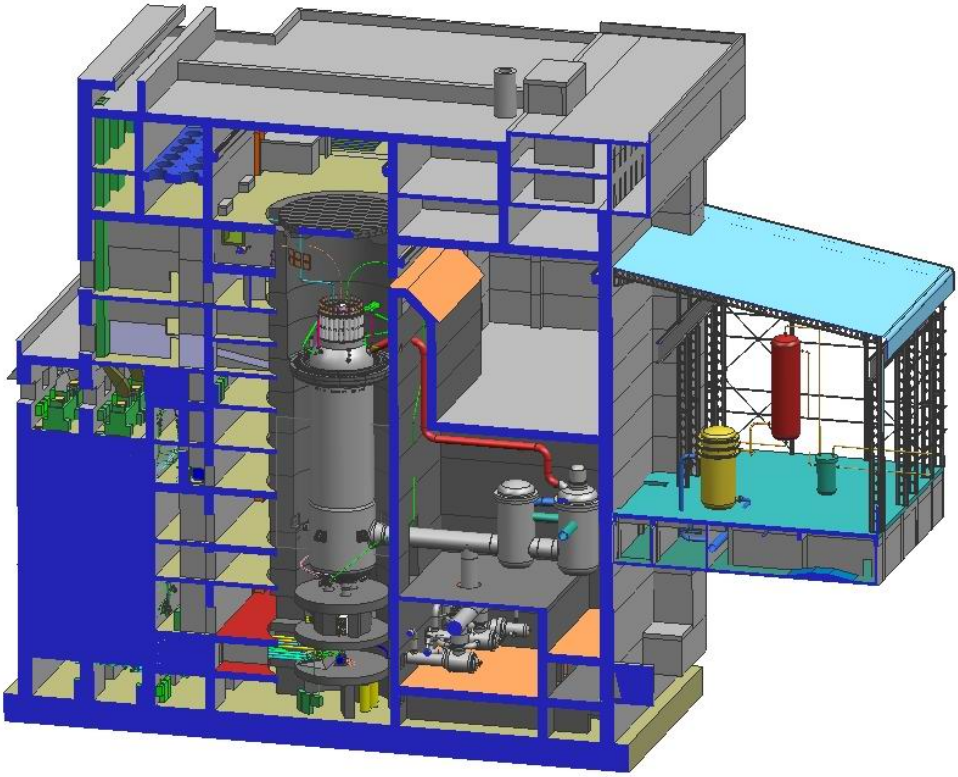

Figure 10.2-1: Nuclear Heat Supply Building

The layout of the NHSB is designed to protect the safety related SSC by providing barrier walls for protection against the effects of an aircraft crash. The exterior walls and roof to the building and the Citadel are the principle elements performing this function.

The structural systems provided to protect the safety related SSC against the effects of an aircraft crash are equally effective for tornados. The exterior walls and roof of the NHSB ensure that the tornado-generated missiles do not penetrate. The exterior walls are also designed to withstand the tornado wind velocity pressure and the atmospheric pressure change. The magnitude of these effects is identified in Section 2 [10-20].

10.2.2 Hydrogen Production System Acid Decomposer Building

10.2.2.1 Building Functions and Requirements

The HPS Acid Decomposer Building provides the required structural support, protection from weather, and natural hazard protection for the Sulfuric Acid Decomposition reactor and related components. This building is shown on drawings NGNP-04-DWG-001 through 004 included in Appendix 10A.

The occupancy classification per [10-14] is H-4 (High Hazard).The NPH Performance Category [10-10] is PC-2 (essential).

Major systems and components include the Secondary Heat Transport System helium piping, the HPS Sulfuric Acid Decomposition System Reactor, concentrator and recuperator. The SOx cooler is located just outside this building.

Physical separation is required between this building and the NHSS Building. The NHSB exterior walls provide a barrier designed for security, fire and potential pressure loads due to pipe rupture in this building. This building and its contents are not credited in the mitigation of design basis events affecting the NHSS. In addition, the building or its contents do not interact with the NHSS building in a manner that compromises the safety functions of the NHSS.

The HPS acid decomposer building is located within the owner controlled area which provides an adequate level of security for the functions of this area. Access to this building is outside the protected area boundary.

Maintenance is considered in designing to allow routine access for inspections, maintenance, repair and replacement of equipment. An overhead crane is provided for this purpose. Liquid secondary containment is required for potential leakage of acid liquid.

10.2.2.2 Building Description

The HPS Acid Decomposer building is a single story building located on the north side of the NHSS building. It has a footprint of approximately 30 m x 25 m.

It is a composite steel frame structure with siding and a reinforced concrete mat on grade. A bridge or gantry crane system is provided for servicing the major equipment. Platforms are provided for inspection and maintenance. Construction is IBC Construction Type IB (Non-combustible).

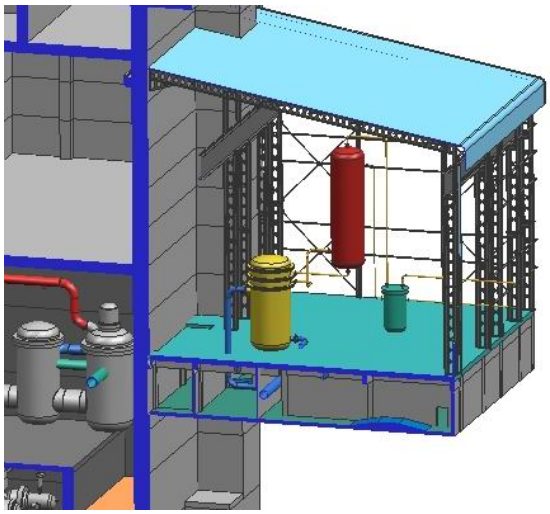

Figure 10.2-2: HPS Acid Decomposer Building

Foundations for equipment in this area generally utilize reinforced concrete mat foundations for support of structures and equipment. Relief panels or sized openings are provided to protect the structure from pressurization from a major pipe rupture.

Access, egress and stairwells are provided to conform to NFPA 101. Early warning fire detection is provided. Fire protection and suppression systems in the area include hose stations and strategically located yard hydrants.

10.2.3 Hydrogen Production System Absorber and Electrolyzer Area

10.2.3.1 Building Functions and Requirements

The HPS Absorber and Electrolyzer Area provides the required structural support, environmental protection and natural hazard protection for the Hydrogen Production System (HPS) components located on the north end of the plant site. While providing some weather protection, the main structure has open sides and openings at the roof peak to allow venting and dispersion of by-product vent gases. This building is shown on drawing NGNP-13-DWG-001 included in Appendix 10A.

The HPS Absorber and Electrolyzer Area house the HPS Electrolysis System including electrolyzers, absorbers and other equipment for production of hydrogen. The area also includes the HPS Electrical and Control Buildings which contain electrical and control equipment for production of hydrogen. The Sulfuric Acid Storage and Receiving Area is located on the south side of this area.

The Occupancy Classification [10-14] is H-2 (High Hazard). The NPH Performance Category [10-10] is PC-2 (Essential).

Major systems and components include HPS electrolyzers, pumps, absorbers, control equipment, and electrical equipment including transformers and AC/DC converters.

The HPS control and electrical buildings are maintained by HVAC at slightly positive pressure to prevent intrusion of dust and gases. The HPS control building and electrical building are also provided with protective barriers to protect operators in case of explosion. Hazards in this area are assessed based on industrial safety standards [10-22].

The electrolyzer area includes a roof to protect operators from weather, while conducting maintenance. Sides of the structure shall open and the peak of the roof is vented to prevent accumulation of hydrogen. Maintenance pull spaces are provided for electrolyzer and cooler internals.

The area is classified in accordance with NFPA 500 [10-16] due to the potential for accumulation of hydrogen.

Liquid secondary containment is required for acid liquid being handled in this area.

10.2.3.2 Building Description

The process area is approximately 40 m x 80 m and is covered by an open sided structure with a vent at the peak of the roof to allow hydrogen to escape.

Buildings and structures for the HPS area including electrical and control rooms utilize the ground floor slab-on-grade with dikes to contain liquids. Building superstructures are pre-engineered steel frame buildings with insulated metal siding and roofing systems. Foundations for equipment and storage in the HPS Absorber/Electrolyzer Equipment Areas will generally utilize reinforced concrete mat foundations for support of heavy structures and equipment.

Electrical classification is Class 1, Division 1 in areas immediately around the electrolyzers, and other locations where hydrogen may be released.

Emergency egress is provided in accordance with IBC and NFPA. Early Warning fire detection is provided. Fire protection and suppression systems in the area include strategically located yard hydrants. Sprinklers are provided for electrical and control areas.

10.2.4 Hydrogen Production System Auxiliary Area

10.2.4.1 Building Functions and Requirements

The Hydrogen Production System Auxiliary Equipment Area provides the required structural support, secondary containment and natural hazard protection for the HPS equipment for the Product Purification System and the Feed and Utility Supply System.

The Occupancy Classification [10-14] is H-2 (High Hazard). The NPH Performance Category [10-10] is PC-2 (Essential).

Major systems and components include HPS purification adsorbers and makeup water purification system skids. Make-up acid, and caustic skids are also placed in this location.

The area is classified in accordance with NFPA 500 [10-16] due to the potential for accumulation of hydrogen.

10.2.4.2 Building Description

Building structures in Hydrogen Production System Auxiliary Equipment Area utilize reinforced concrete spread footings supporting a floor slab-on-grade. Area structures include steel frame racks to support piping and electrical conduit. Truck access is provided for delivery of process chemicals.

Electrical classification is Class 1, Division 1 in areas immediately around the hydrogen purification skids.

Fire protection and suppression systems in the area include strategically located hose stations and yard hydrants.

10.2.5 Steam Generator Building

10.2.5.1 Building Functions and Requirements

The Steam Generator Building provides the required structural support, protection from weather, and natural hazard protection for the Power Conversion System (PCS) Steam Generator. This building is shown on drawings NGNP-04-DWG-001 through 004 included in Appendix 10A.

The occupancy classification [10-14] is F-1 (Industrial, Moderate Hazard).The NPH Performance Category [10-10] is PC-2 (essential).

Major systems and components include the Secondary Heat Transport System helium piping, the PCS steam generator, steam generator supports, feedwater and main steam system piping, and main steam safety valves. Liquid secondary containment is required in the event of a major liquid spill or leakage of PCS feedwater.

Physical separation is required between this building and the NHSS Building. The NHSB exterior walls provide a barrier designed for security, fire and potential pressure loads due to pipe rupture in this building. This building and its contents are not credited in the mitigation of design basis events affecting the NHSS. In addition, the building or its contents do not interact with the NHSS building in a manner that compromises the safety functions of the NHSS.

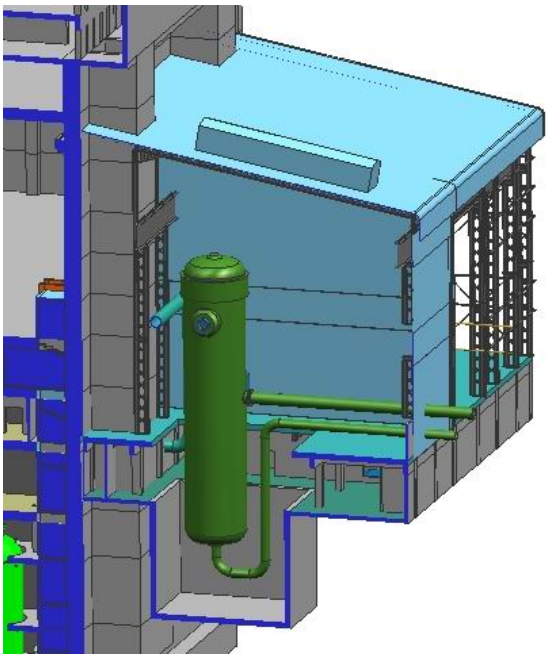

Figure 10.2-3: Steam Generator Building

The Steam Generator Building is located within the owner controlled area which provides an adequate level of security for the functions of this area. Access to this building is outside the protected area boundary.

Maintenance is considered in designing to allow routine access for inspections, maintenance, repair and replacement of equipment. An overhead crane is provided for this purpose.

10.2.5.2 Building Description

The Steam Generator Building is a single story building located on the north side of the NHSS building. It has a footprint of approximately 10 m by 25 m.

It is a composite steel frame structure with insulated siding and roof, with concrete footing foundations and slab-on-grade construction. A portion of the foundation I embedded due the height of the Steam generator. A bridge or gantry crane system is provided for servicing the major equipment. Platforms are provided for inspection and maintenance. Construction is IBC Construction Type IB (Non-combustible).

Foundations for equipment in this area generally utilize reinforced concrete mat foundations for support of heavy structures and equipment. Relief panels or sized openings are provided to protect the structure from pressurization from a major pipe rupture.

Access, egress and stairwells are provided to conform to NFPA 101 [10-15]. Early warning fire detection is provided. Fire protection and suppression systems in the area include hose stations and strategically located yard hydrants.

10.2.6 Power Conversion System (Turbine) Building

10.2.6.1 Building Functions and Requirements

The Power Conversion System (Turbine) Building provides the required structural support, environmental protection, and natural hazard protection for the (PCS) Turbine generator and support systems. This building is shown on drawing NGNP-05-DWG-002 included in Appendix 10A.

The PCS Turbine Building houses the steam turbine-generator units, condensate polishers, feedwater pumps and heaters, and other PCS support system equipment. Other adjacent and associated equipment facilities include the Auxiliary Boiler Room, Step-Up Transformer, and Unit Auxiliary Transformer.

The occupancy Classification [10-14] is Group F-1 (Industrial, Moderate Hazard). The NPH Performance Category [10-10] is PC-2 (Essential Facility).

Liquid secondary containment dikes and curbs are provided to capture and properly handle oily waste. Fire Separation walls are required around flammable/combustible liquids.

The PCS Turbine Building is located within the owner controlled area which provides an adequate level of security for the functions of this area. Access to this building is outside the protected area boundary.

Maintenance is considered in designing to allow routine access for inspections, maintenance, repair and replacement of equipment. An overhead crane is provided for this purpose.

10.2.6.2 Building Description

The PCS (Turbine) Building is a multiple story composite steel frame structure, approximately 30 m x 75 m, with concrete mat foundations and floor slabs. A bridge or gantry crane system is provided for servicing the turbine and major equipment. Construction is IBC Construction Type IB (Non-combustible). There is separation of areas housing flammable or combustible materials as determined by fire hazard analysis.

Building structures for the Turbine Building, Auxiliary Boiler Room, Step-Up Transformer, and Unit Auxiliary Transformer Areas utilize reinforced concrete mats. Building superstructures are steel frame buildings with insulated metal siding and roofing systems.

Foundations for equipment, generally utilize reinforced concrete mat foundations for support of structures and equipment. The turbine is mounted on a multi-column support pedestal.

Emergency egress and stairwells conform to NFPA 101 [10-15]. Early warning fire detection is provided. Fire protection and suppression systems in the area include strategically located yard hydrants. Sprinklers are provided on transformers, cable areas and turbine bearings.

10.2.7 Condenser Area

10.2.7.1 Building Functions and Requirements

The Condenser Area provides the required structural support and liquid secondary containment area for the PCS Air Cooled Condenser (ACC) and components. The Condenser Area houses the PCS ACC unit comprising steam exhaust ductwork, A- Frame piping arrangement, approximately thirty-six (36) fans and associated equipment, including an ACC electrical switchgear building, deaerator/condensate receiver tank, condensate pumps, and steam-jet air injectors.

Occupancy Classification [10-14] is Group F-1 (Industrial, Moderate Hazard). The NPH Performance Category [10-10] is PC-2 (Essential Facility).

The Condenser Area is located within the owner controlled area which provides an adequate level of security for the functions of this area. Access to this area is outside the protected area boundary.

Maintenance is considered in designing to allow routine access for inspections, maintenance, repair and replacement of equipment.

10.2.7.2 Building Description

The Condenser Area covers an area of approximately 50 m x 180 m. The ACC is an A-Frame piping arrangement with fans mounted on a steel frame super structure. There are several small buildings located under the ACC to house the electrical switchgear, deaerator, condensate pumps, and air ejectors. Monorails and platforms are provided to accommodate maintenance on ACC fans and motors.

Construction in the ACC area generally utilizes reinforced concrete mat foundations for support of air-cooled condenser structures, the switchgear building, steam-jet air injection equipment, deaerator/condensate receiver and condensate pump equipment.

Fire protection and suppression systems in the area include strategically located hose stations and yard hydrants.

10.2.8 Control Building

10.2.8.1 Building Functions and Requirements

The Control Building provides the required structural support, environmental protection, and natural hazard protection for Central Control and Supervisory System equipment. The building is shown on drawing NGNP-06-DWG-002 included in Appendix 10A.

The Control Building is a two-level structure enclosing interface cabinets, electrical distribution equipment and mechanical equipment rooms on the lower level. The upper level provides offices and the main control room complex housing wide-screen display panels, dedicated engineering and operator work stations, and any required auxiliary control and display consoles required for control of plant systems.

The occupancy classification [10-14] is Group F-1 (Industrial, Medium-Hazard).The NPH Performance Category [10-10] is PC-2 (Essential Facility).

Major systems and components include BOP control systems; wiring/cabling; switchgear; HVAC and mechanical systems.

Fire area separation is determined in a fire hazard analysis conducted in the conceptual and preliminary design phases.

The main control room or operators are not required to respond to design basis events or credited in safety analyses in order to maintain the safety of the public [10-21]. The Control Room Building is not required to be habitable following a design basis nuclear event

Requirements for habitability for chemical hazards are assessed based on industrial standards [10-22]. The Control building design provides handicapped accessibility in accordance with IBC [10-14] and Americans with Disabilities Act accessibility guidelines.

The Control Building is located within the owner controlled area which provides an adequate level of security for the functions of this area. Access to this building is outside the protected area boundary.

Access is provided to allow routine maintenance, repair and/or replacement of components and system equipment.

10.2.8.2 Building Description

The Control Building footprint is approximately 30 m x 50 m with two floor levels. An elevator is provided for vertical access between floors. Construction is IBC [10-14] Construction Type IB (Non-combustible). The building area determined more by space needed for support equipment in the lower level than by operator and control station needs. This results in adequate space for expansion to accommodate multiple NHSS units.

The building utilizes a reinforced concrete basement level concrete slab-on-grade, steel framed structure with reinforced concrete floor slabs, metal roof deck with insulated roofing system, and insulated metal panel exterior walls. It includes gypsum board on steel stud interior partitions, and suspended ceilings in office areas.

The building is provided with 480 V power, with distribution panels for secondary power and lighting. Emergency lighting is provided. Provisions are made for computer networks (internet/extranet), in-plant and off-site communications. Provisions are made for controlled access and Close Circuit Television (CCTV) monitoring.

The building is heated, ventilated and air-conditioned. Plumbing is provided for toilet rooms, kitchen/break areas, janitor sinks and floor drains.

Fire separation is provided between the control room and the electrical and mechanical areas. Emergency egress is provided in accordance with IBC and NFPA. Fire protection for the building includes wet-type sprinklers, gaseous suppression, hand held extinguishers and strategically located hose cabinets, exterior fire hose connections and yard hydrants. Early warning smoke detection is provided.

10.2.9 Ancillary Building

10.2.9.1 Building Functions and Requirements

The Ancillary Building provides the required structural support, environmental protection, and natural hazard protection for ancillary systems and equipment as described below.

The Ancillary Building houses the compressed air system plant and HVAC chillers for the NHSB; medium-voltage and low-voltage switchgear with associated cable spreader rooms below the switchgear rooms; four (4) transformers, two (2) back-up diesel generators, and HVAC equipment rooms.

The occupancy classification [10-14] is Group F-1 (Industrial, Moderate Hazard). The NPH Performance Category [10-10] is PC-2 (Essential Facility).

Liquid secondary containment is provided for diesel generator areas to prevent release of oily waste water.

The Ancillary Building is located within the owner controlled area which provides an adequate level of security for the functions of this area. Access to this building is inside the protected area boundary.

Access is provided to allow routine maintenance, repair and/or replacement of components and system equipment.

10.2.9.2 Building Description

The Ancillary Building is a single-story building with a ground floor level footprint of approximately 35 m x 40 m, with a raised platform section in the center section of the building of approximately 13 m x 40 m for switchgear. An exterior ramp system is provided for vertical access between ground floor and switchgear levels. Construction is IBC Construction Type IB (Non-combustible).

Structure utilizes reinforced concrete spread footings monolithic with the ground floor slab-on-grade which is waterproofed on the underside of the slab. Foundations for diesel generator sets are separated from the building foundations to prevent transmission of vibrations into the building. Interior and exterior separation walls, columns, floor beams and the raised switchgear platform slab utilize reinforced concrete construction. The roof structure uses steel truss and purlin framing with an insulated metal panel roofing system.

The building is provided with 480 V power, switchgear, and motor control centers, with distribution panels for secondary power and lighting.

Fire Separation is provided between the diesel generator and other areas within the building. Emergency egress is provided in accordance with IBC and NFPA. Fire protection for the building includes wet-type sprinklers, strategically located hose cabinets, exterior fire hose connections and yard hydrants. Early warning smoke detection is provided.

10.2.10 Services Building

10.2.10.1 Building Functions and Requirements

The Services Building provides the required structural support, environmental protection, confinement envelope and natural hazard protection for systems and equipment as described below.

The Services Building provides for personnel access to the controlled areas of the NHSB through a Radiation Protection access control and an enclosed passageway at ground level connecting to the NHSB. The flow of personnel through the radiation protection access control, into and out of the NHSB, is optimized. The Services Building also houses the Waste Handling and Storage System, the hot-chemical and radiological laboratory, decontamination showers, laundry, and tool decontamination areas. The building is divided into functional areas separated by passages and, where necessary, shielding walls. All areas are accessible from the lobby of the building, but also have separate emergency exits.

An underground tunnel is provided between the Services Building and the NHSB for piping, electric cables and I&C wiring.

The Radiation Protection access control area on the ground floor level includes the RP Office, male and female change rooms, access turnstiles with computers, portal monitors, tool, decontamination and storage areas, hot and cold laundries, male and female decontamination showers and a medical center. Waste from decontamination showers, hot laundry and radiation monitoring facilities is routed to the Waste Handling and Storage System for processing. Low and intermediate level waste is processed in solid and liquid form at the ground floor level. Waste is stored in the basement using containers suitable for shielding, containment and transportation.

The second floor level of the Services Building houses laboratories, additional open plan office space, and HVAC equipment rooms.

The occupancy classification [10-14] is Group H-4 (High Hazard). The NPH Performance Category [10-10] is PC-2 (Essential Facility).

Areas potentially containing radiological contamination are sealed and provided with HEPA filters and exhausted to maintain pressure slightly lower than surrounding areas.

Fire separation is as determined in the fire hazard analysis in conceptual and preliminary design.

The Services Building is located within the protected area boundary. Provisions are made for CCTV security recording and monitoring.

Access is provided to allow routine maintenance, repair and/or replacement of system equipment.

10.2.10.2 Building Description

The Services Building footprint is approximately 25 m x 50 m, with three floor levels (basement below grade, ground level, and second floor above grade). An elevator is provided for vertical access between floors. Construction is IBC Construction Type IB (Non-combustible).

The building utilizes a reinforced concrete mat foundation for the basement and the at-grade liquid waste treatment area of the ground floor. Foundation walls, superstructure columns, and elevated slabs for the second floor and ground floor above the basement area, are reinforced concrete. The roof is steel framed with an insulated metal roofing system, and exterior walls which utilize insulated metal panel wall construction consistent with adjacent buildings. Gypsum board on steel stud interior partitions and suspended ceilings are provided in office areas.

The building is provided with 480 v power, switchgear, and motor control centers with distribution panels for secondary power and lighting. Emergency lighting is provided.

Provisions are made for computer networks (internet/extranet), laboratory equipment, and in-plant and off-site communications. Provisions are made for controlled access and CCTV monitoring.

The Services Building and enclosed passageway to the NHSB is heated, ventilated and air-conditioned by the dedicated and zone controlled HVAC systems. Contamination controlled and uncontrolled zones are separated and include seals and radiation shielding to prevent contamination from entering uncontrolled zones. Air pressure differentials are maintained such that air leakage is always towards the most potentially contaminated zones. Plumbing is provided for the hot-chemical laboratory, decontamination showers, laundry, tool decontamination areas, janitor sinks and floor drains.

Emergency egress is provided in accordance with IBC and NFPA. Fire protection and suppression systems for the building include wet-type sprinklers, strategically located hose cabinets, exterior fire hose connections and yard hydrants. Early warning smoke detection is provided.

10.2.11 Cooling Water Plant Building

10.2.11.1 Building Functions and Requirements

The Cooling Water Plant Building provides the required structural support, environmental protection, and natural hazard protection for NHSS auxiliary cooling system and equipment, as described below. The building primarily houses those components required to cool the NHSS and to reject heat to the adjacent NHSS Evaporative Coolers.

The Cooling Water Plant Building houses the NHSS Cooling Water pumps and heat exchangers for the Active Cooling System, the Equipment Protection Cooling Circuit and the Reactor Cavity Cooling System. Piping between the Cooling Water Plant Room and the NHSS is run in an underground tunnel connecting the two buildings. Piping between the Cooling Water Plant Room and the adjacent auxiliary cooling water evaporative coolers is run in another underground tunnel connecting those two areas.

The Occupancy Classification [10-14] is Group F-2 (Industrial, Low-Hazard). The NPH Performance Category [10-10] is PC-2 (Essential Facility).

The Cooling Water Plant Building is located within the protected area boundary.

Access is provided to allow routine maintenance, repair and/or replacement of system equipment. Liquid secondary containment dikes and curbs are required for potentially contaminated liquids.

10.2.11.2 Building Description

The Cooling Water Plant Building is a two-level building with a ground floor level footprint of approximately 25 m x 40 m and a basement level of approximately 15 m x 40 m for switchgear. Access with an exterior ramp system is provided for vertical access between ground floor and switchgear levels. Construction is IBC Construction Type IB (Non-combustible).

The building utilizes reinforced concrete spread footings monolithic with the ground floor slab-on-grade which is waterproofed on the underside of the slab. Interior and exterior separation walls, columns, floor beams and the raised switchgear platform slab utilize reinforced concrete construction. The roof structure uses framing with an insulated metal panel roofing system.

The building is provided with 480 V power, switch gear, and motor control centers, with distribution panels for secondary power and lighting.

The building is heated, and ventilated, but not air-conditioned. Plumbing is provided for floor drains.

Egress is provided in accordance with IBC and NFPA. Fire protection and suppression systems for the building includes wet-type sprinklers, strategically located hose cabinets, exterior fire hose connections and yard hydrants. Early warning smoke detection is provided.

10.2.12 Water/Waste Water Treatment Building

10.2.12.1 Building Functions and Requirements

The Water/Waste Water Treatment Plant Building provides the required structural support, weather protection and secondary liquid containment for both the Water and Waste Water treatment equipment, as described below. The Water/Waste Water Treatment Building houses equipment for the pumping and treatment of well water for use in the plant water, potable water and demineralized water systems as well as for processing and recycling waste water. For a description of these treatment systems, refer to Chapter 9.

The occupancy Classification [10-14] is Group H-4 (High-Hazard with toxic and corrosive materials). The NPH Performance Category [10-10] is PC-1 (Ordinary Structure).

Major systems and components include the water and waste water treatment skids, pumps, the evaporator, and the filter press equipment.

The Water Treatment Building is located within the owner controlled area which provides an adequate level of security for the functions of this area. Access to this building is outside the protected area boundary.

Access is provided to allow routine maintenance, repair and/or replacement of component equipment. Liquid secondary containment is provided for chemical and waste water storage tanks and feed skids.

10.2.12.2 Building Description

The Water Treatment Building is a single story pre-engineered metal building, approximately 30 m x 30 m with concrete foundations and slab-on-grade construction. An overhead monorail system is provided for servicing the filter press and other equipment. Construction is IBC Construction Type IB (Non-combustible).

The building is provided with 480 V power, with distribution panels, motor controllers for pumps, and lighting. Emergency lighting is provided. Provisions are made for in-plant communications.

The building is heated and ventilated but not air-conditioned. Plumbing is provided for wash-down, sinks and floor drains.

Fire protection for the building does not include sprinklers, but includes strategically located hose cabinets, exterior fire hose connections and yard hydrants. Early warning smoke detection is provided.

10.2.13 Sewage Treatment Building

10.2.13.1 Building Functions and Requirements

The Sewage Treatment Building provides the required structural support, design envelope, weather protection and containment for the Sewage Treatment equipment. The Sewage Treatment Building houses a prefabricated biological wastewater treatment unit for the treatment of domestic sewage collected on the site. For a description of the sewage treatment system, refer to Chapter 9.

The occupancy classification [10-14] is Group F-2 (Industrial, Low-Hazard). The NPH Performance Category [10-10] is PC-1 (Ordinary Structure).

Access is provided to allow routine maintenance, repair and/or replacement of system equipment.

10.2.13.2 Building Description

The Sewage Treatment Building is a single story pre-engineered metal building, approximately 8 m x 10 m with slab-on-grade construction. Construction is IBC Construction Type IB (Non-combustible).

The building is provided with 480 V power, with motor control centers, and distribution panels for pumps, motor controllers, secondary power and lighting. Emergency lighting is not provided. Provisions are made for in-plant communications.

The building is heated and ventilated but not air-conditioned. Plumbing is provided for wash-down, sinks and floor drains.

Fire protection for the building does not include sprinklers, but includes strategically located hose cabinets, exterior fire hose connections and yard hydrants. Early warning smoke detection is provided.

10.2.14 Administration Building

10.2.14.1 Building Functions and Requirements

The Administration Building provides the required design envelope and weather protection for plant administration.

The Administration Building provides office facilities required for approximately 130 people performing management, technical, operations and administrative support functions. Major systems and components include the NHSS simulator, computers, communications, and other office equipment.

The Occupancy Classification [10-14] is Group B (Business). The NPH Performance Category [10-10] is PC-1 (Ordinary Structure).

The technical support center for personnel required for post accident response is housed in this building. The building is habitable following an event for which post accident monitoring is required.

The Administration Building is located within the owner controlled area which provides an adequate level of security for the functions of this area. Access to this building is outside the protected area boundary.

The design accommodates handicapped accessibility in accordance with IBC and ADA accessibility guidelines.

10.2.14.2 Building Description

The Administration Building is approximately 18 m x 25 m, with three floor levels (one below grade). An elevator is provided for vertical access between floors. Construction is IBC Construction Type IB (Non-combustible).

Foundation construction utilizes reinforced concrete mat foundation and foundation walls. The superstructure is steel framed with reinforced concrete floor slabs, metal roof deck with insulated roofing system, and insulated metal panel exterior wall construction. Interior walls utilize fire rated gypsum board on steel stud partitions. Office areas have suspended ceilings. The building is heated, ventilated and air-conditioned. Plumbing is provided for toilet rooms and kitchen/break areas, janitor sinks and floor drains.

Fire area separation is required as determined by the fire hazard analysis. Emergency egress is provided in accordance with IBC and NFPA requirements. Fire protection and suppression systems for the building include wet-type sprinklers, strategically located hose cabinets, exterior fire hose connections and yard hydrants. Early warning smoke detection is provided.

10.2.15 Security Building

10.2.15.1 Building Functions and Requirements

The Security Building provides the required space and protection for plant security personnel and equipment. The building provides office facilities for personnel performing security, clearance, records and administrative support functions, as well as for the security alarm station. A description of the security system is included in Section 9 of this report.

The Occupancy Classification [10-14] is Group B (Business). The NPH Performance Category [10-10] is PC-2 (Essential Facility).

Major systems and components include computers, communications, and other office equipment. The Secondary Alarm Station is housed in a hardened portion of this building.

The Security Building forms a part of the protected area boundary. It is currently outside the vital area boundary which will require exemption from the USNRC Standard Review Plan requirement to place security alarm stations within a vital area. Provisions will be made all requirements of 10CFR73 [10-18], including CCTV security recording and monitoring.

10.2.15.2 Building Description

The Security Building is a single floor building, approximately 25 m x 25 m. Construction is IBC Construction Type IB (Non-combustible).

Foundation construction utilizes reinforced concrete spread footings and foundation walls. The ground level floor is concrete slab-on-grade. The superstructure is steel framed with a metal insulated roofing system, and insulated metal panel exterior wall construction. Interior walls utilize fire rated gypsum board on steel stud partitions. Office areas have suspended ceilings.

The building is provided with normal and backup power, with distribution panels for power and lighting. Emergency lighting is provided. Provisions are made for uninterrupted power (UPS) for computer networks (internet/extranet), in-plant and off-site communications. Provisions are also made for controlled access and CCTV monitoring.

The building is heated, ventilated and air-conditioned. Plumbing is provided for toilet rooms and kitchen/break areas, janitor sinks and floor drains.

Separation is provided between critical and non critical areas within the building as determined by the fire hazard analysis. Emergency egress is provided in accordance with IBC and NFPA requirements. Fire protection and suppression systems for the building include wet-type sprinklers, strategically located hose cabinets, exterior fire hose connections and yard hydrants. Early warning smoke detection is provided.

10.2.16 Warehouse

10.2.16.1 Building Functions and Requirements

The Warehouse provides the required environmental and weather protection, and secondary containment for storage of spare parts, equipment, and consumables required for operation and maintenance of the plant. Materials handling equipment, storage racks/bins. Storage categories A, B, C and D are provided as defined in [10-17].

The Occupancy Classification [10-14] is Group S-2 (Low-Hazard Storage). The NPH Performance Category [10-10] is PC-1 (Ordinary Structure).

Liquid Secondary Containment is provided for storage of hazardous liquids. Separation between this building and other buildings is a nominal 50 feet or as determined by the detailed fire protection review in conceptual design.

10.2.16.2 Building Description

The Warehouse is a single story pre-engineered metal building, approximately 40 m x 60 m with slab-on-grade and spread footing construction. Construction is IBC Construction Type IB (Non-combustible).

The main areas of the building are heated and ventilated. Level A storage and office areas are air conditioned. Plumbing is provided for wash-down, sinks and floor drains, and office areas.

Fire Separation Areas are provided as determined by fire hazard analysis. Emergency egress is provided in accordance with IBC and NFPA requirements. Fire protection and suppression systems for the building include wet-type sprinklers, strategically located hose

cabinets, exterior fire hose connections and yard hydrants. Early warning smoke detection is provided.

10.2.17 Other Buildings and Structures

The following table identifies key attributes for other minor buildings and structures on the site not described previously.

Table 10.2-1: Other Buildings and Structures

Building/Area	Occupancy [10-14]	Area Sq. Ft. (Sq. m.)	Construction	Remarks
Fuel Oil Storage Tank and Pump House	H-3	1600 (150)	Pre-engineered Siding slab on grade	Sprinklers
Component Cooling Pump Houses	F-2	Two at 400 (37)each	Pre-engineered Siding slab on grade	Early Warning Fire Detectors
Closed Circuit Evaporative Coolers	F-2	10000 (900), 5000 (450)	Prefabricated skids with concrete Mat on grade	Provides cooling for PCS and HPS.
Fire Pump House	H-3	400 (37)	Pre-engineered, composite siding, slab on grade	Sprinklers
Well Water Pump Houses	F-2	4 at 100 (9) each	Pre-engineered, composite siding, slab on grade	Hydro pneumatic Tanks and pumping equipment.
Switchyard	F-1	20000( )	Crushed stone and mats on grade	
Gatehouse	B	7200 (670)	Pre-engineered composite siding, slab on grade	Sprinklers, Early Warning Fire Detectors
Hazardous Storage Building	H-4	1600	Pre-engineered, composite siding, slab on grade	50 foot separation

10.3 DESIGN DEVELOPMENT NEEDS

Design development needs are not anticipated for PBMR NGNP buildings. The site development and building designs discussed in this section are based on conventional, proven technology, and construction techniques.

10.4 COMPLEXITY, RISK AND FUTURE STUDIES

10.4.1 Complexity and Risks

The site development and building designs discussed in this section are founded on conventional and proven technology. The normal process and approach to engineering and design of a large project results in optimized and cost effective overall project execution. Value engineering techniques are used throughout the conceptual and preliminary design phases to reduce schedule and cost risk and uncertainties.

10.4.2 Future Studies

It is recommended that the following studies be conducted early in the conceptual design phase so that the preliminary and final design phases will not be delayed, and a valid basis can be established for early conceptual design decisions.

Geotechnical Data Review

A future study is recommended to review the validity and acceptability of the available geotechnical data obtained in the NPR program and by others for the INL site. This study will determine the extent that additional geotechnical investigations including new borings and topographical surveys are required to support foundation design for the PBMR NGNP site layout.

Seismic Design Methodology Review

A future study is recommended to review and verify validity and applicability of existing Probabilistic Seismic Hazard Analysis data that have been assembled for other INL facilities. It is anticipated that the conclusion of this study would be a that the design ground level response spectra developed for these other facilities is representative and bounding for application to the PBMR NGNP with respect to NRC regulatory standards. If this is the case a site specific Probabilistic Seismic Hazard Analysis may not be required for the PBMR NGNP.

Major Equipment Transportation Trade Study

Detailed studies of the transportation routes and size constraints on transport of large components such as the reactor and steam generator and potential modularization for major components are recommended for early in the conceptual design phase. This study will assess schedule and cost advantages and disadvantages of final assembly of major items at or near the site. The study will influence the design of access roads and a rail spur shown on the site plan and plot plan as well plans for modification to other roads in the vicinity of the INL site.

Modularization Study

A future study is recommended to build upon the pre-conceptual design, and evaluate alternative construction techniques that could potentially improve the schedule and potentially reduce the cost estimate for the NGNP, and also reduce the risk in both areas. The study is to evaluate design concepts that facilitate construction modularization, including but not limited to altering the site arrangement and/or building arrangements to enhance constructability, selecting different materials of construction, replacing conventional concrete forming concepts, preassembly of rooms and/or buildings, and preassembly of bulk materials and/or subsystems

Nuclear Heat Supply Building Foundation Study

A future study is recommended to identify all applicable requirements and regulatory sources pertaining to the protection of the Nuclear Heat Supply System against natural and manmade phenomena. The study will evaluate and assess alternatives for burying or not burying the NHSB.

Hydrogen and Nuclear Heat Supply System Separation Study

A future study is recommended to assess advantages and disadvantages of separating HPS from NHSS. This study will verify that adequate separation and protection from hazards associated with handling of Hydrogen, is provided with respect to safety of the NHSS. It will assess advantages and disadvantages for bringing the HPS electrolyzer and absorber closer to the NHSS. The potential impact of security regulations on separation requirements will also be assessed to determine if it may in fact be the most significant driver.

REFERENCES

[10-1] Next Generation Nuclear Plant High-Level Functions and Requirements," Idaho National Engineering and Environmental Laboratory, September 2003, INEEL/EXT-03-01163, as modified by the Independent Technology Review Group (ITRG) report, "Design Features and Technology Uncertainties for the Next Generation Nuclear Plant", Independent Technology Review Group, Phil Hildebrandt, et al., April 2004.

[10-2] Next Generation Nuclear Plant Project, Preliminary Project Management Plan," March 2006, INL/EXT-05-00952, Rev. 1.

[10-3] Site Selection Report for the New Production Reactor at the Idaho National Engineering Laboratory," Informal Report, EGG-NPR-8517, Rev. 1, July 1989.

[10-4] Advanced Light Water Reactor Utility Requirements Document," Volume 1-Rev. 2, Volume 2-Rev. 8, Volume 3-Rev. 8, March 30, 1999, Electric Power Research Institute (EPRI), as applicable.

[10-5] Climatography of the Idaho National Engineering Laboratory, 2nd Edition, December 1989.

[10-6] Separation Requirements for a Hydrogen Production Plant and High-Temperature Nuclear Reactor, INL/EXT-05-00137, Rev. 1, September 2005.

[10-7] Summary Report NPR 1991, Technical Drilling (with associated drilling data provided by BEA) May 1991.

[10-8] Environmental and Other Evaluations of Alternatives for Siting, Constructing and Operating New Production Reactor Capacity Vol. 1, 2 and 3. DOE/NP-0014, September 1992.

[10-9] ICP Architectural Engineering Standards Design Basis Earthquake Parameters (Appendix S), Draft Provided by BEA by Email January 24, 2007.

[10-10] DOE-STD-1020-2002, DOE STANDARD, Natural Phenomena Hazards Design And Evaluation Criteria For Department Of Energy Facilities, January 2002, EGG-NPD-8836, DE90 010936

[10-11] Reference Site Selection Report for the Advanced Liquid Metal Reactor At The Idaho National Engineering Laboratory, March 1990, EG&G Idaho, Inc.

[10-12] U. S. Department of Energy, DOE G 420.1-2, Guide for the Mitigation of Natural Phenomena Hazards for DOE Nuclear Facilities and Non-nuclear Facilities, Washington, D. C., March 28, 2000.

[10-13] U.S. Department of Energy, DOE-STD-1021-93, Performance Categorization Criteria for Structures, Systems, and Components at DOE Facilities Subjected to Natural Phenomena Hazards, Washington, D.C., July 1993.

[10-14] International Building Code (IBC) 2003

[10-15] National Fire Protection Association NFPA 101; Life Safety Code

[10-16] National Fire Protection Association NFPA 500; National Electrical Code

[10-17] ASME NQA-1 2000, "Quality Assurance Requirements for Nuclear Facility Applications

[10-18] 10CFR73, Physical Protection of Plants and Materials, and 10CFR73.55, Requirements For Physical Protection Of Licensed Activities In Nuclear Power Reactors Against Radiological Sabotage

[10-19] PCDR Section 2, Top Level Requirements, Para. 2.2.1.2.

[10-20] PCDR Section 2, Top Level Requirements Para. 2.2.1.1.8

[10-21] PCDR Section 2, Top Level Requirements Para. 2.2.1.1.4, 2.2.1.1.4

[10-22] PCDR Section 2, Top Level Requirements Para. 2.2.1.3.4

LIST OF ASSUMPTIONS

There are no specific assumptions identified for this section.

APPENDICES

APPENDIX 10A DRAWINGS

See PDF files provided on CD:

NGNP-03-DWG-001 – Site Plan
NGNP-03-DWG-002 – Plot Plan
NGNP-03-DWG-003 – Commercial Site Key Plan
NGNP-04-DWG-001 – Nuclear Heat Supply Building
NGNP-04-DWG-002 – Nuclear Heat Supply Building Floor Level -9250
NGNP-04-DWG-003 – Nuclear Heat Supply Building Floor Level + 700
NGNP-04-DWG-004 – Nuclear Heat Supply Building Floor Level +16550
NGNP-05-DWG-002 – Power Conversion System Arrangement
NGNP-06-DWG-002 – Control Building Arrangement
NGNP-13-DWG-001 – Hydrogen Production System Absorber and Electrolyzer Area

APPENDIX 10B FINAL DESIGN REVIEW PRESENTATION TO BEA

See Section 9, Appendix 9B.

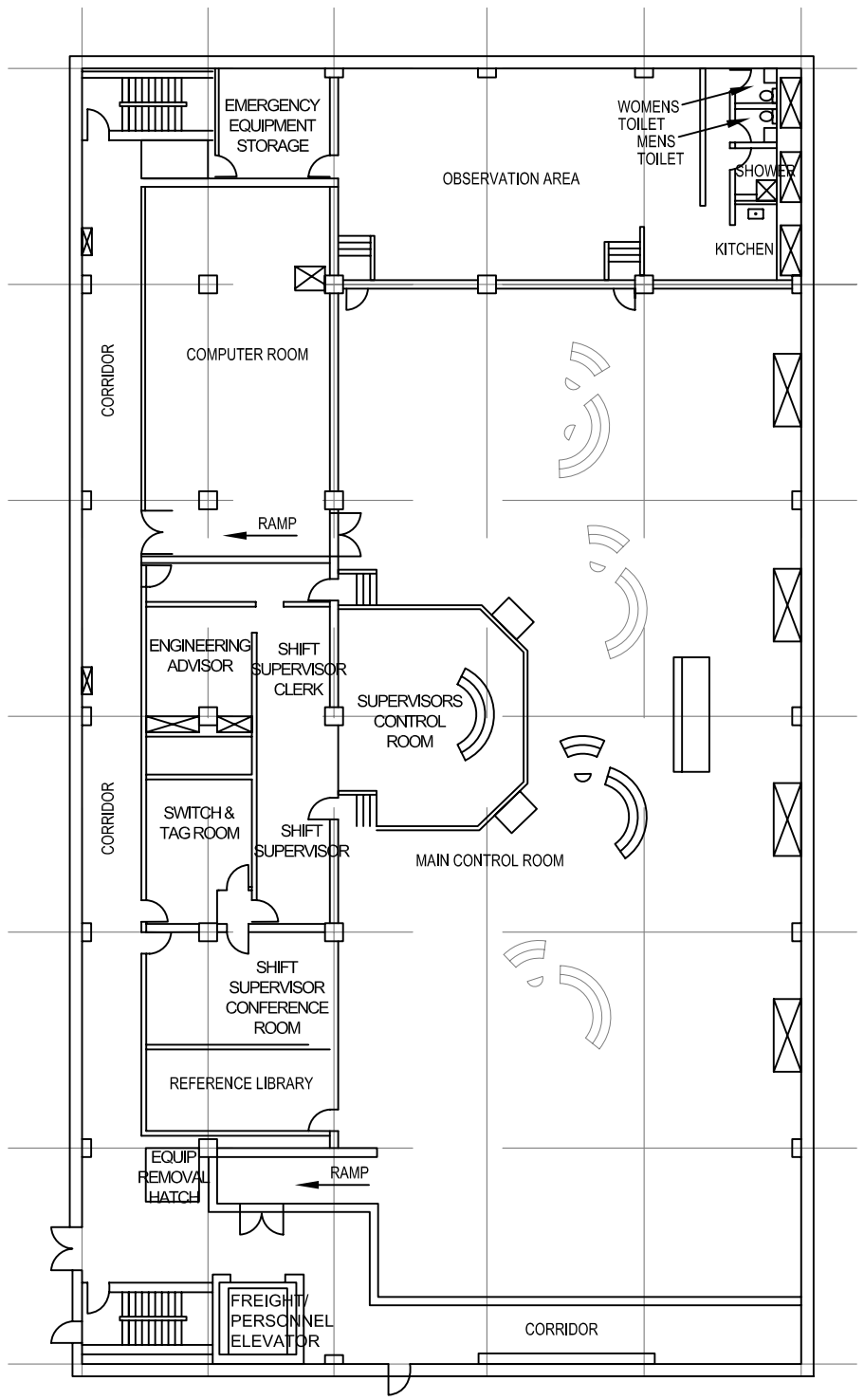

SECOND FLOOR

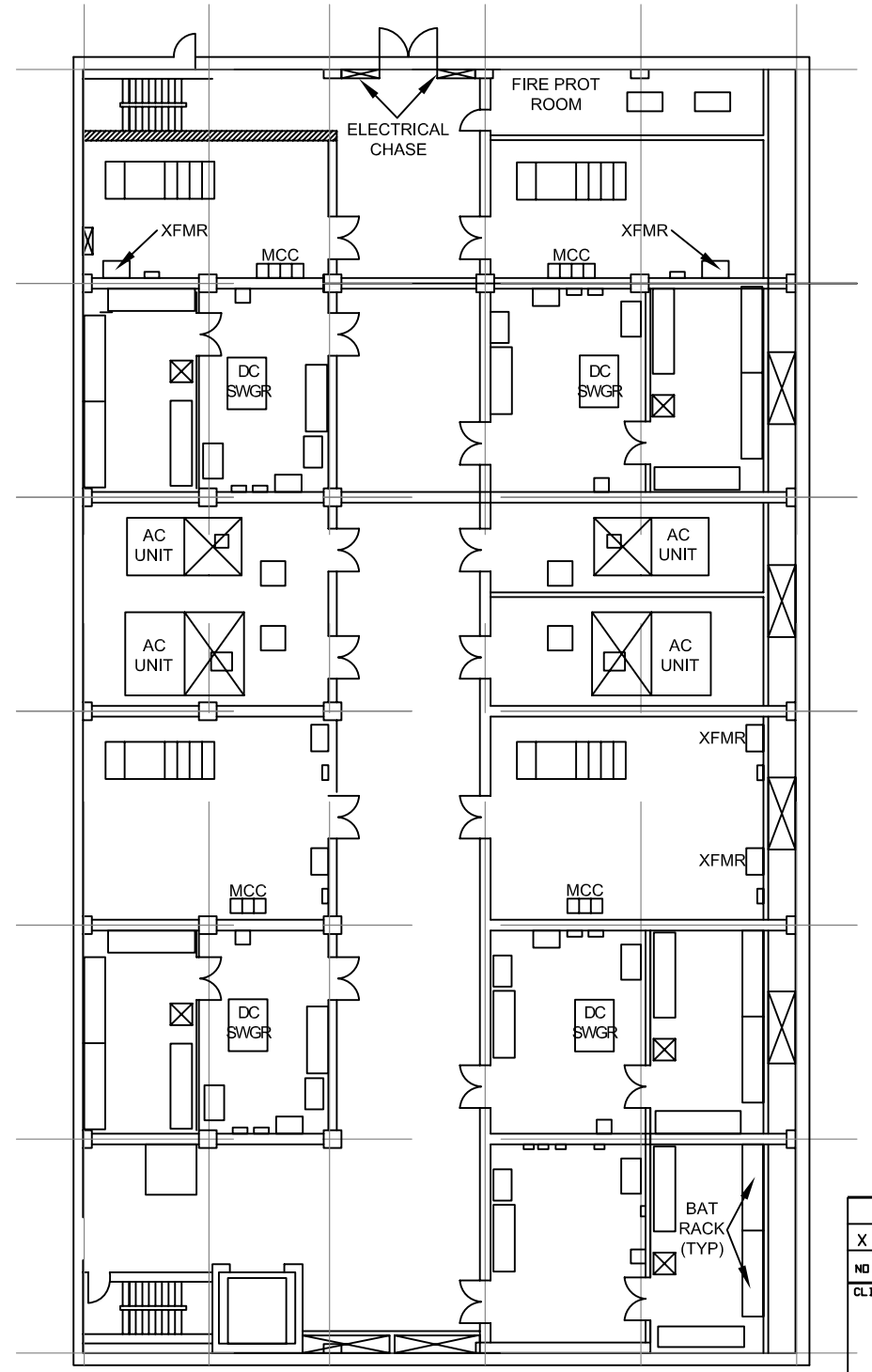

FIRST FLOOR

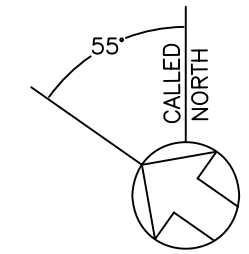

16 8 0 8 32 48 FEET

GRAPHIC SCALE (FEET)

NO	DATE	ISSUE DESCRIPTION	BY	CHKD	DISCP	APPR
X						

CLIENT

BATTELLE ENERGY ALLIANCE
PBMR NGNP WITH HYDROGEN PRODUCTION
IDAHO NATIONAL LABORATORY

TITLE

CONTROL ROOM ARRANGEMENT

Shaw Environmental, Inc.

DESIGNED BY | DRAWN BY | CHECKED BY

RESP. ENGR. | CERT. FOR CONST.

SCALE	CLIENT JOB NUMBER	DATE
		4/4/07

S & W J.O. NUMBER	DRAWING NUMBER	REV NO
123910	NGNP-06-DWG-002	A

DRAWING NUMBER NGNP-06-DWG-002 REV NUMBER A

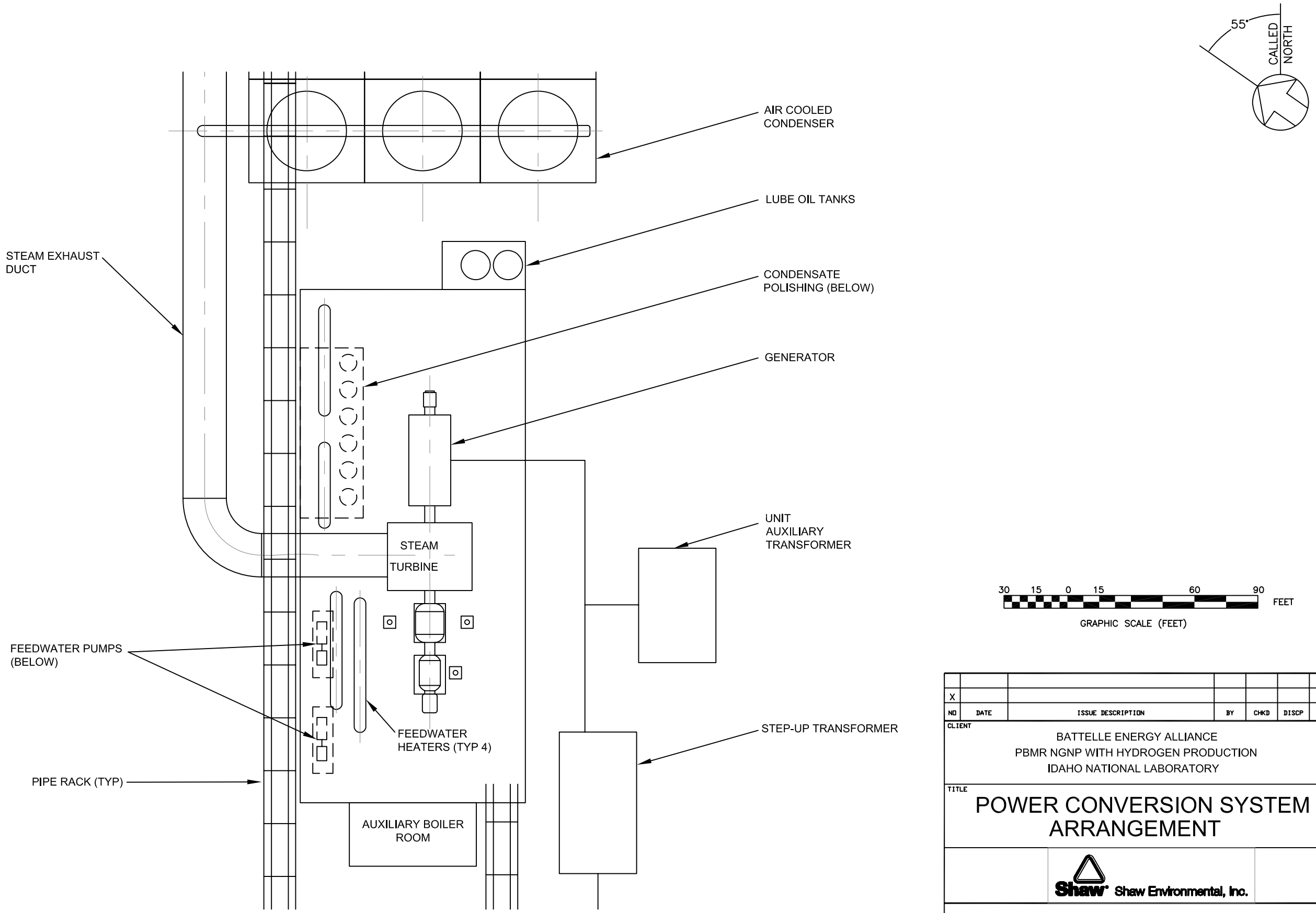

NO	DATE	ISSUE DESCRIPTION	BY	CHKD	DISCP	APPR
X						

CLIENT

BATTELLE ENERGY ALLIANCE
PBMR NGNP WITH HYDROGEN PRODUCTION
IDAHO NATIONAL LABORATORY

TITLE

POWER CONVERSION SYSTEM ARRANGEMENT

Shaw Environmental, Inc.

DESIGNED BY | DRAWN BY | CHECKED BY

RESP. ENGR. | CERT. FOR CONST.

SCALE	CLIENT JOB NUMBER	DATE
		4/5/07

S & W J.O. NUMBER	DRAWING NUMBER	REV NO
123910	NGNP-05-DWG-002	A

DRAWING NUMBER: NGNP-05-DWG-002 REV NUMBER: A

DO NOT SCALE DRAWING

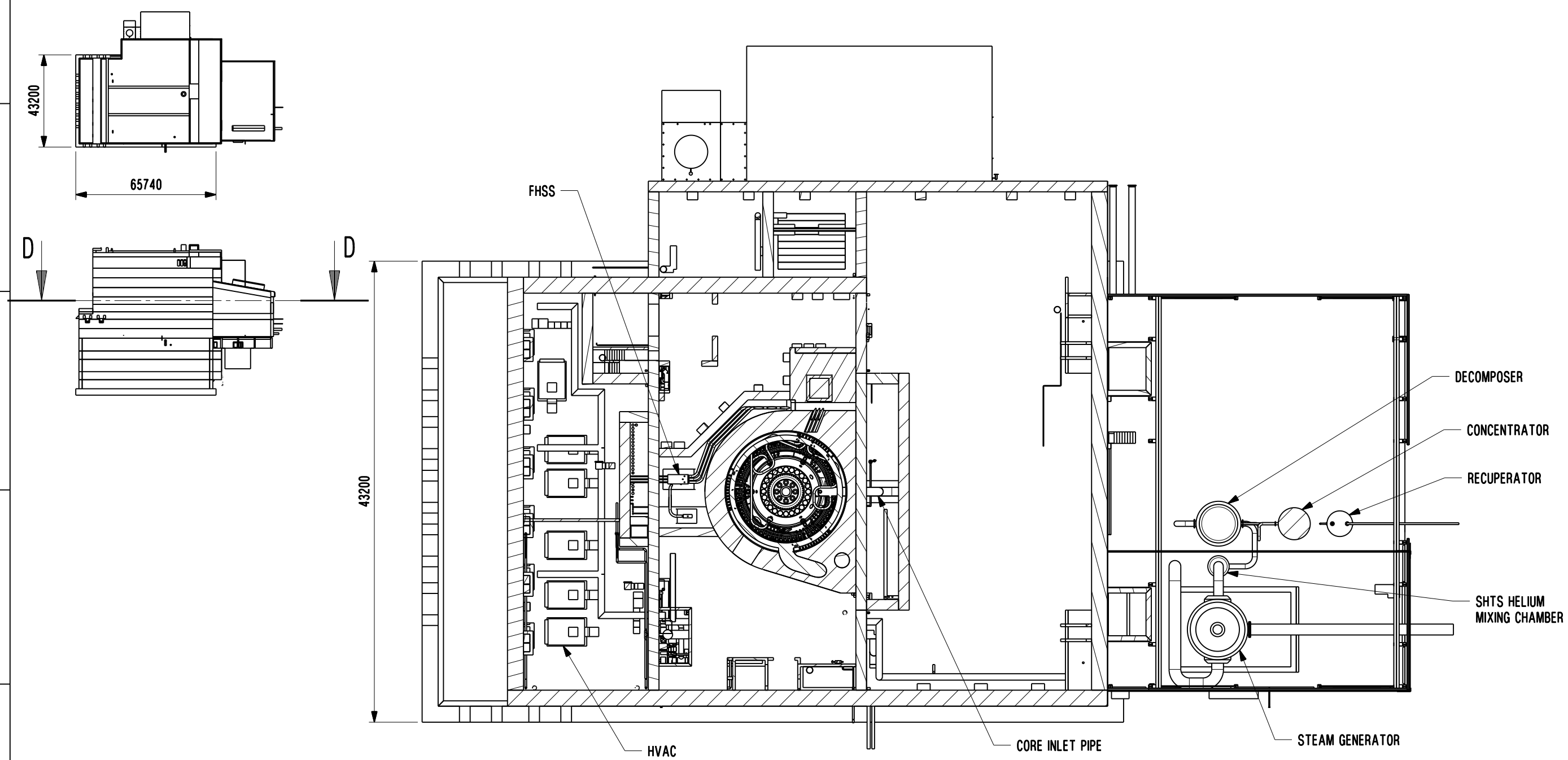

SECTION D-D

REV	ISSUE	DATE	PREPARED	COMMENTS REVIEW Y/N	RESPONSIBLE ENGINEER	REVISION DETAILS (INCLUDE E.C.P. DETAILS)

PREPARED DJU	SIGNATURE	DATE 19/04/07
REVIEWED	SIGNATURE	DATE
APPROVED	SIGNATURE	DATE

STATUS
APPROVED FOR:

PBMR
© Copyright 2004
Proprietary Class 2

DRAWING STD.
SABS 0111

PROJECTION

TITLE: NUCLEAR HEAT SUPPLY BUILDING
FLOOR LEVEL +16550

MODEL No. 055000	SCALE: N.T.S.	REVISION	A
DRAWING No. NGNP-04-004	SHT. 1 OF 1	ISSUE	01

METRIC - ALL DIMENSIONS ARE IN MILLIMETERS

SIZE A3

DO NOT SCALE DRAWING

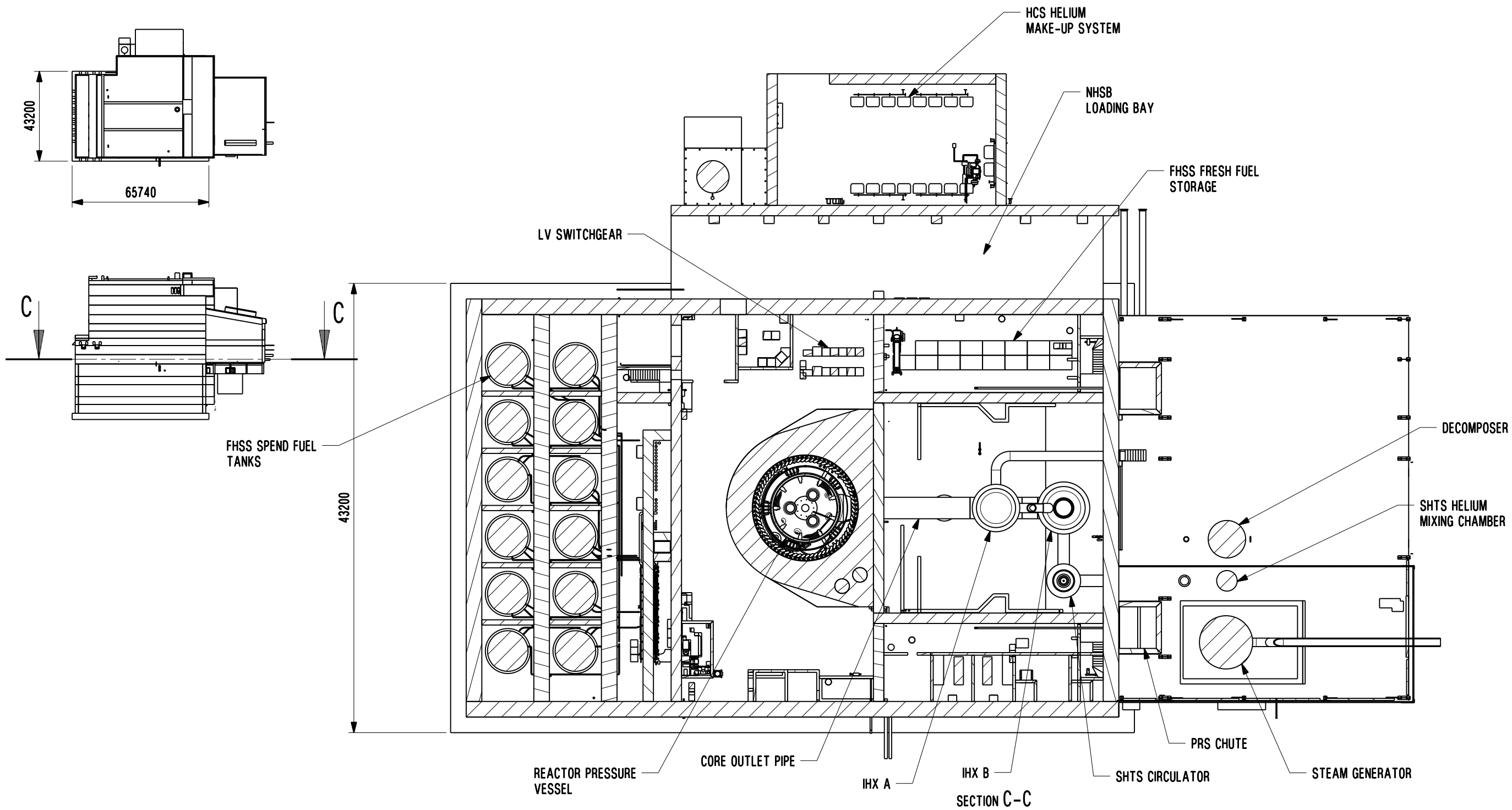

REV	ISSUE	DATE	PREPARED	COMMENTS REVIEW Y/N	RESPONSIBLE ENGINEER	REVISION DETAILS (INCLUDE E.C.P. DETAILS)

PREPARED DJU	SIGNATURE	DATE 19/04/07
REVIEWED	SIGNATURE	DATE
APPROVED	SIGNATURE	DATE

STATUS
APPROVED FOR:

PBMR
©Copyright 2004
Proprietary Class 2

DRAWING STD. SABS 0111

PROJECTION

TITLE: NUCLEAR HEAT SUPPLY BUILDING FLOOR LEVEL +700

MODEL No. 055000	SCALE: N.T.S.	REVISION	A
DRAWING No. NGNP-04-003	SHT. 1 OF 1	ISSUE	01

METRIC - ALL DIMENSIONS ARE IN MILLIMETERS

SIZE A3

DO NOT SCALE DRAWING

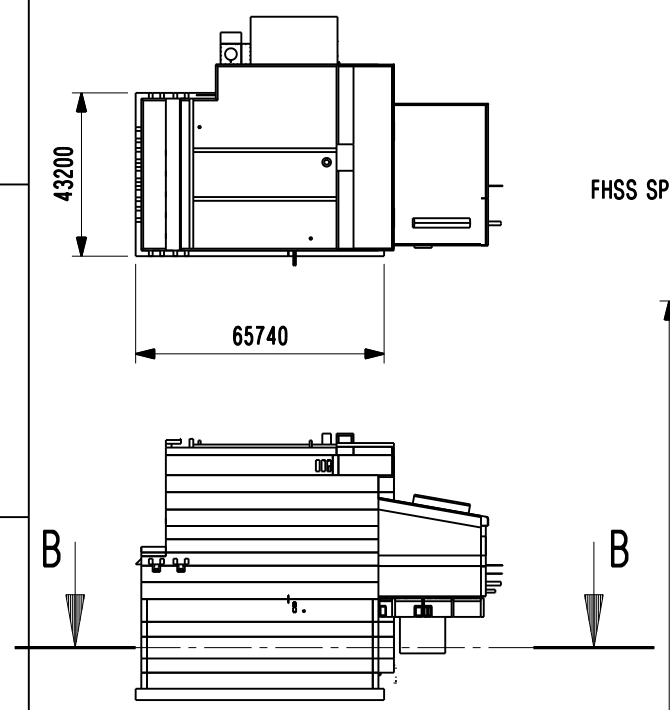

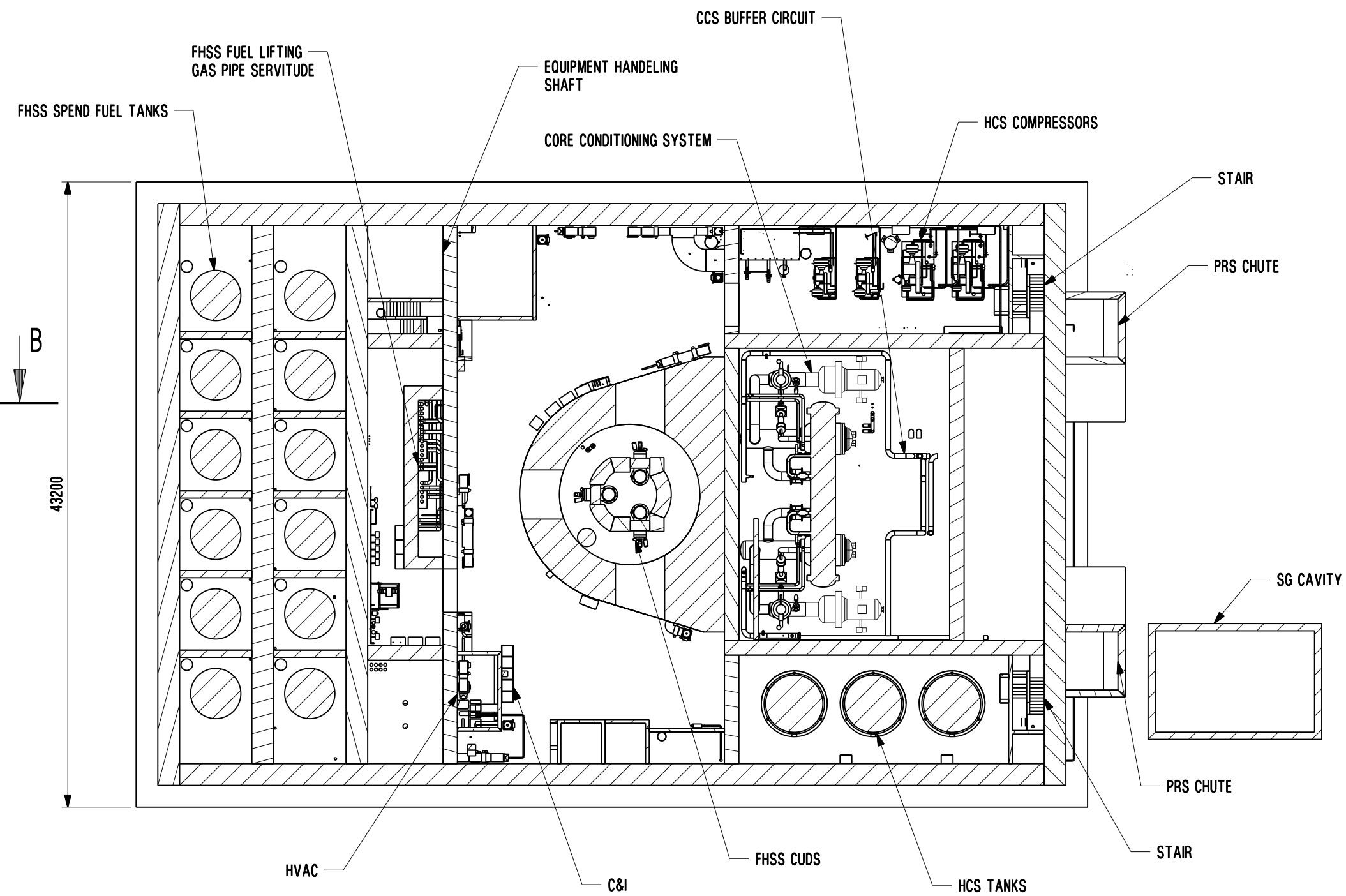

SECTION B-B

REV	ISSUE	DATE	PREPARED	COMMENTS REVIEW Y/N	RESPONSIBLE ENGINEER	REVISION DETAILS (INCLUDE E.C.P. DETAILS)

PREPARED DJU	SIGNATURE	DATE 19/04/07
REVIEWED	SIGNATURE	DATE
APPROVED	SIGNATURE	DATE

STATUS
APPROVED FOR:

PBMR
© Copyright 2004
Proprietary Class 2

DRAWING STD.
SABS 0111

PROJECTION

TITLE: NUCLEAR HEAT SUPPLY BUILDING
FLOOR LEVEL -9250

MODEL No. 055000	SCALE: N.T.S.	REVISION	A
DRAWING No. NGNP-04-002	SHT. 1 OF 1	ISSUE	01

METRIC - ALL DIMENSIONS ARE IN MILLIMETERS

SIZE A3

DO NOT SCALE DRAWING

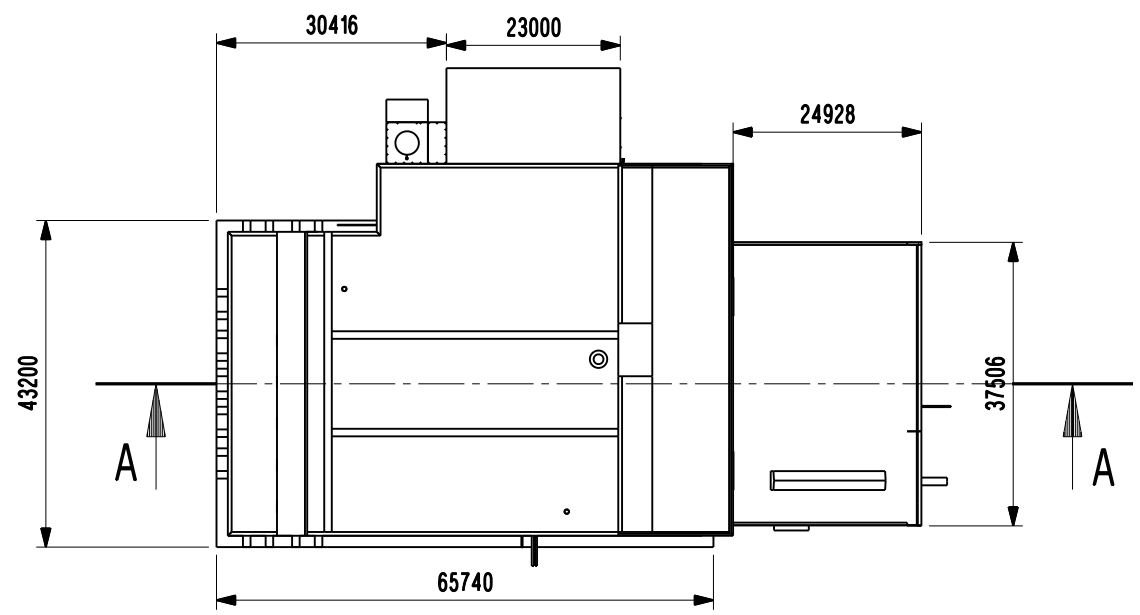

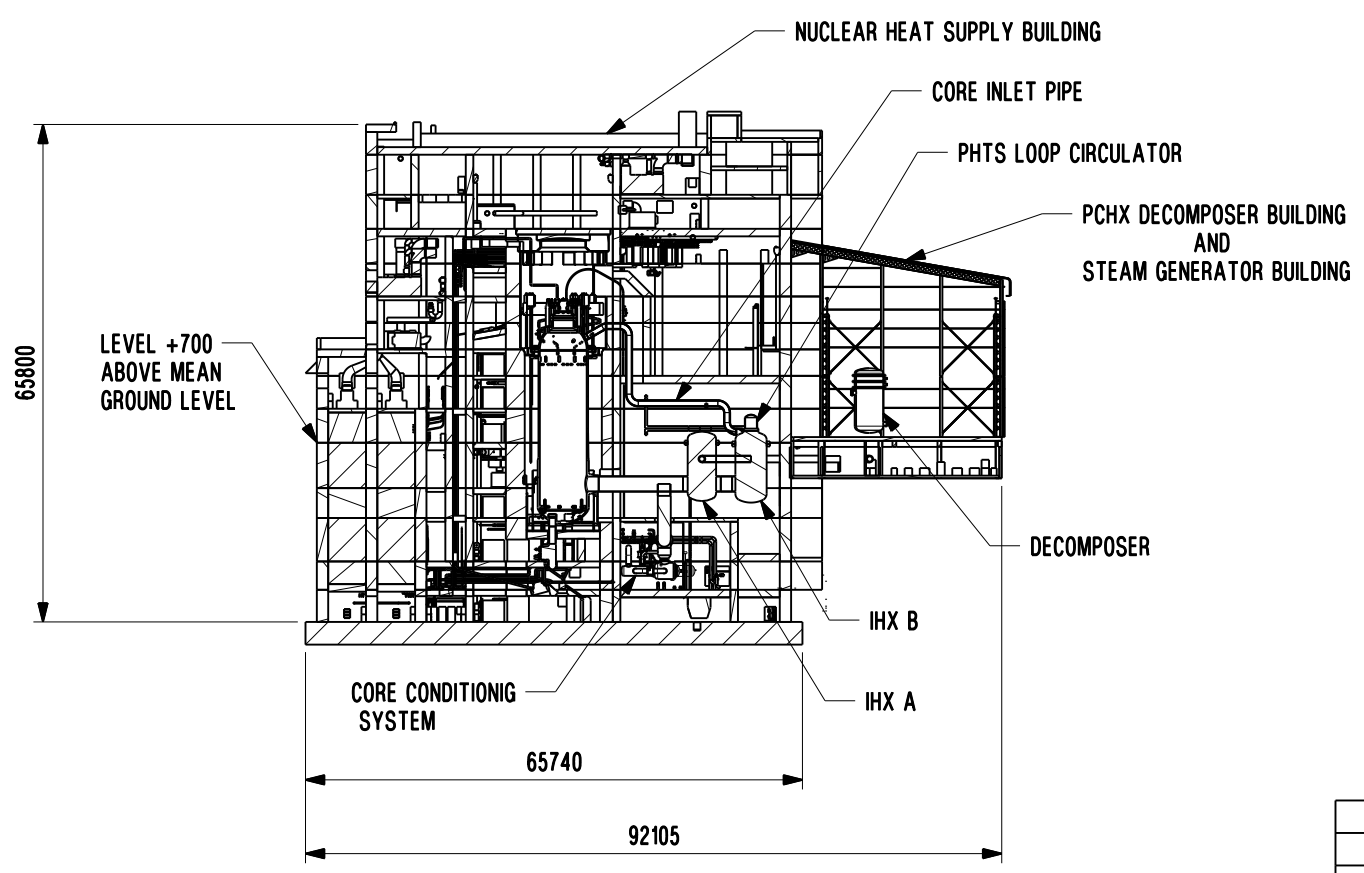

SECTION A-A

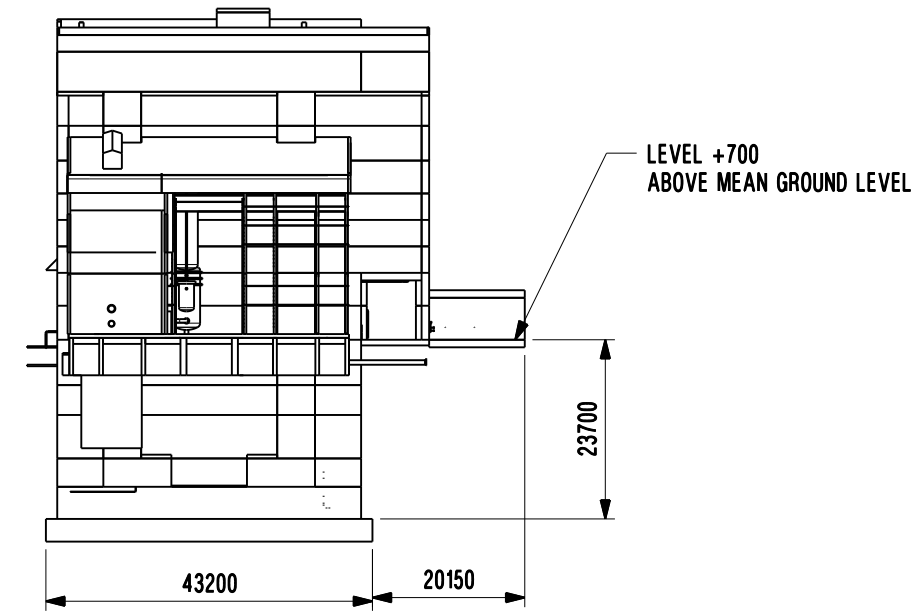

METRIC - ALL DIMENSIONS ARE IN MILLIMETERS

REV	ISSUE	DATE	PREPARED	COMMENTS REVIEW Y/N	RESPONSIBLE ENGINEER	REVISION DETAILS (INCLUDE E.C.P. DETAILS)

PREPARED	SIGNATURE	DATE	
DJU		19/04/07	
REVIEWED	SIGNATURE	DATE	
APPROVED	SIGNATURE	DATE	

STATUS
APPROVED FOR:

PBMR
© Copyright 2004

DRAWING STD.
SABS 0111

PROJECTION

TITLE:

NUCLEAR HEAT SUPPLY BUILDING

MODEL No. 055000	SCALE: N.T.S.	REVISION	A
DRAWING No. NGNP-04-001	SHT. 1 OF 1	ISSUE	01

SIZE A3

DRAWING NUMBER	REV NUMBER
NGNP-03-DWG-003	A

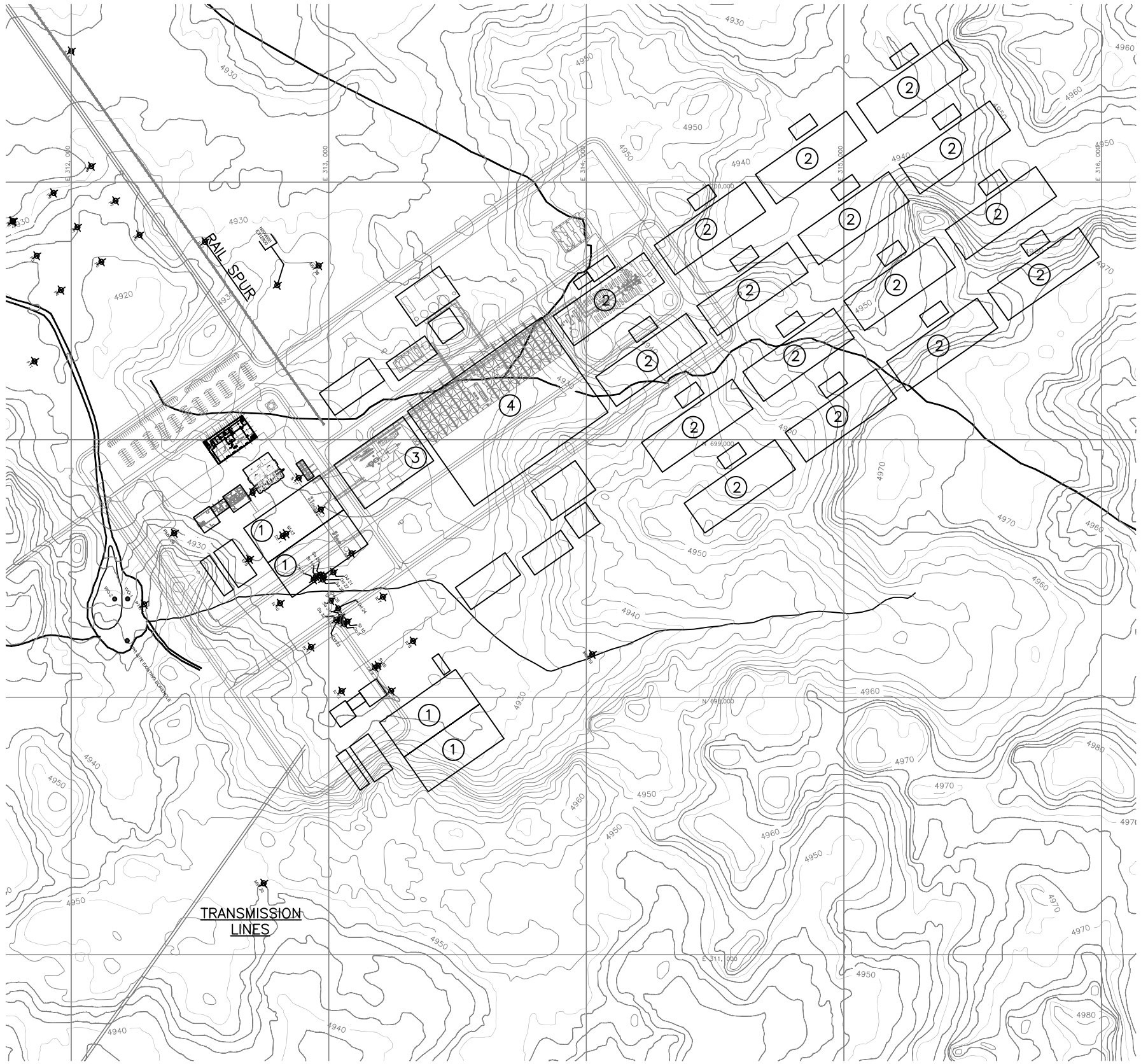

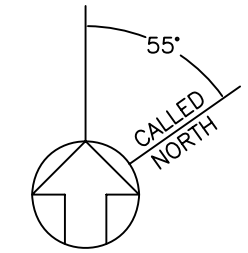

LEGEND

1. NHSS BUILDING
2. HPS ELECTROLYZER BUILDING
3. PCS (TURBINE BUILDING)
4. PCS (AIR COOLED CONDESOR)

300 150 0 150 600 900 FEET

GRAPHIC SCALE (FEET)

NO	DATE	ISSUE DESCRIPTION	BY	CHKD	DISCP	APPR
X						

CLIENT

BATTELLE ENERGY ALLIANCE
PBMR NGNP WITH HYDROGEN PRODUCTION
IDAHO NATIONAL LABORATORY

TITLE

COMMERCIAL SITE KEY PLAN

Shaw Environmental, Inc.

DESIGNED BY | DRAWN BY | CHECKED BY
RESP. ENGR. | CERT. FOR CONST.

SCALE	CLIENT JOB NUMBER	DATE
		4/9/07

S & W J.O. NUMBER	DRAWING NUMBER	REV NO
123910	NGNP-03-DWG-003	A

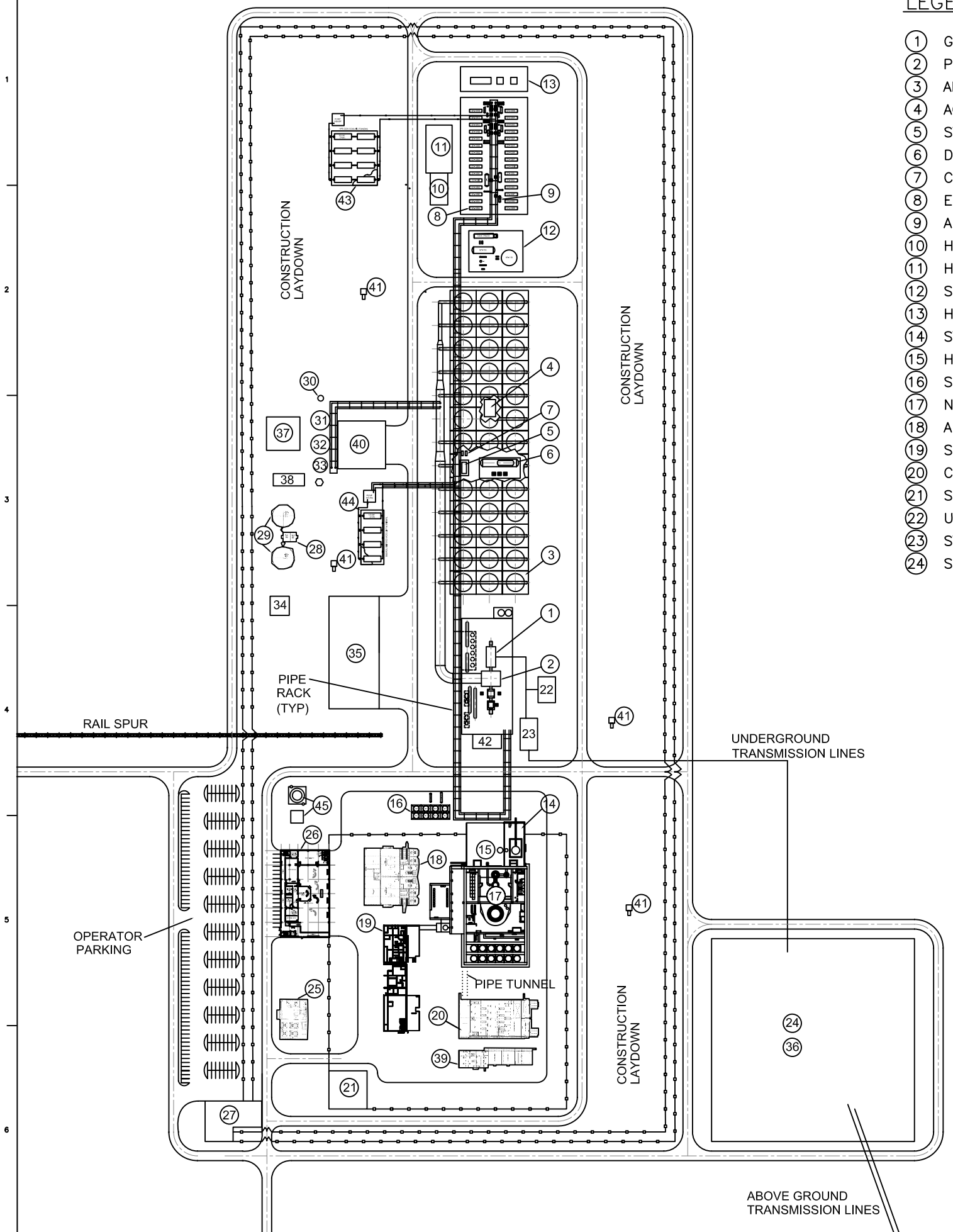

LEGEND

1. GENERATOR
2. PCS TURBINE BUILDING
3. AIR COOLED CONDENSER
4. ACC ELECTRICAL SWITCHGEAR BUILDING
5. STEAM JET AIR EJECTOR
6. DEAERATOR/CONDENSATE RECEIVER TANK
7. CONDENSATE PUMPS
8. ELECTROLYZER VESSEL
9. ABSORBER VESSEL
10. HPS CONTROL BUILDING
11. HPS ELECTRICAL BUILDING
12. SULPHURIC ACID STORAGE/RECEIVING AREA
13. HPS AUXILIARY AREA
14. STEAM GENERATOR BUILDING
15. HPS ACID DECOMPOSER BUILDING
16. SO_X COOLER
17. NUCLEAR HEAT SUPPLY BUILDING
18. ANCILLARY BUILDING
19. SERVICES BUILDING
20. COOLING WATER BUILDING
21. SECURITY BUILDING
22. UNIT AUXILIARY TRANSFORMER
23. STEP–UP TRANSFORMER
24. SWITCHYARD
25. ADMIN BUILDING
26. CONTROL BUILDING
27. GATE HOUSE
28. FIRE WATER PUMPHOUSE
29. FIRE WATER STORAGE TANK
30. POTABLE WATER TANK
31. RAW WATER STORAGE TANK
32. DEMINERALIZER WATER STORAGE TANK
33. NEUTRALIZING TANK
34. HAZARDOUS MATERIAL BUILDING
35. WAREHOUSE
36. START–UP TRANSFORMER
37. PERCOLATION POND
38. SEWAGE TREATMENT BUILDING
39. NHSS EVAPORATIVE COOLERS
40. WATER/WASTEWATER TREATMENT BUILDING
41. WELL HOUSE
42. AUXILIARY BOILER ROOM
43. HPS CCW COOLERS
44. TURBINE PLANT CCW COOLERS
45. FUEL STORAGE/PUMPHOUSE

55° CALLED NORTH

160 80 0 80 320 480 FEET

GRAPHIC SCALE (FEET)

NO	DATE	ISSUE DESCRIPTION	BY	CHKD	DISCP	APPR
X						

CLIENT

BATTELLE ENERGY ALLIANCE
PBMR NGNP WITH HYDROGEN PRODUCTION
IDAHO NATIONAL LABORATORY

TITLE

PLOT PLAN

Shaw Environmental, Inc.

DESIGNED BY | DRAWN BY | CHECKED BY
RESP. ENGR. | CERT. FOR CONST.

SCALE	CLIENT JOB NUMBER	DATE
		4/9/07

S & W J.O. NUMBER	DRAWING NUMBER	REV NO
123910	NGNP-03-DWG-002	A

DRAWING NUMBER NGNP-03-DWG-002 REV NUMBER A

DRAWING NUMBER	REV NUMBER
NGNP-03-DWG-001	A

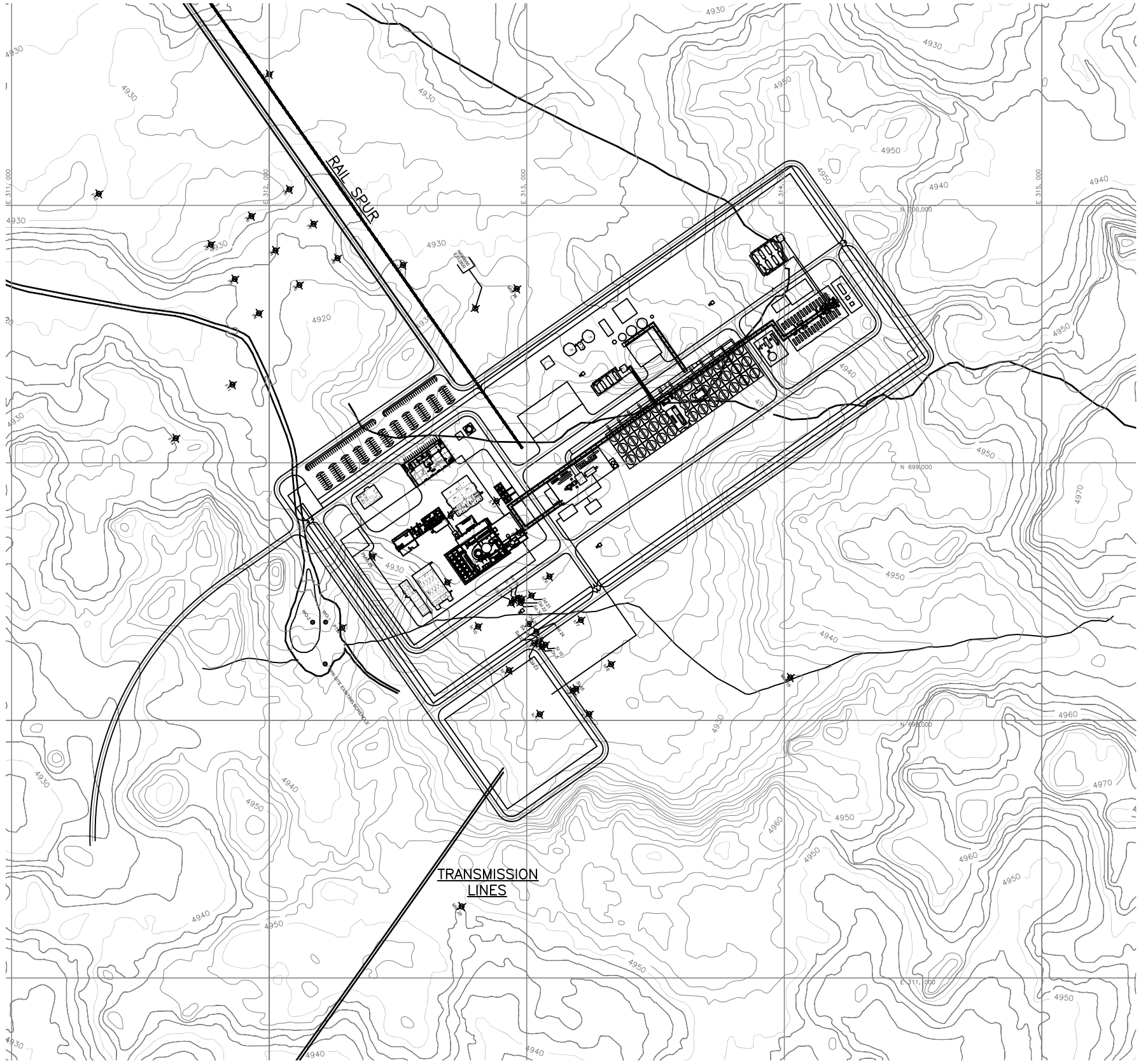

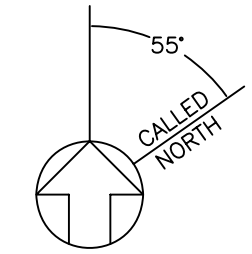

NOTES:

1) COORDINATES REFER TO IDAHO COORDINATE SYSTEM, CENTRAL ZONE (TRANSVERSE MERCATOR).
2) BORING LOCATIONS SHOWN ARE APPROXIMATE, TO BE VERIFIED BY FIELD SURVEY.
3) CONTOUR INTERVAL IS 2 FEET.

300 150 0 150 600 900 FEET

GRAPHIC SCALE (FEET)

NO	DATE	ISSUE DESCRIPTION	BY	CHKD	DISCP	APPR
X						

CLIENT

BATTELLE ENERGY ALLIANCE
PBMR NGNP WITH HYDROGEN PRODUCTION
IDAHO NATIONAL LABORATORY

TITLE

SITE PLAN

Shaw Environmental, Inc.

DESIGNED BY | DRAWN BY | CHECKED BY

RESP. ENGR. | CERT. FOR CONST.

SCALE	CLIENT JOB NUMBER	DATE
		4/9/07

S & W J.O. NUMBER	DRAWING NUMBER	REV NO
123910	NGNP-03-DWG-001	A

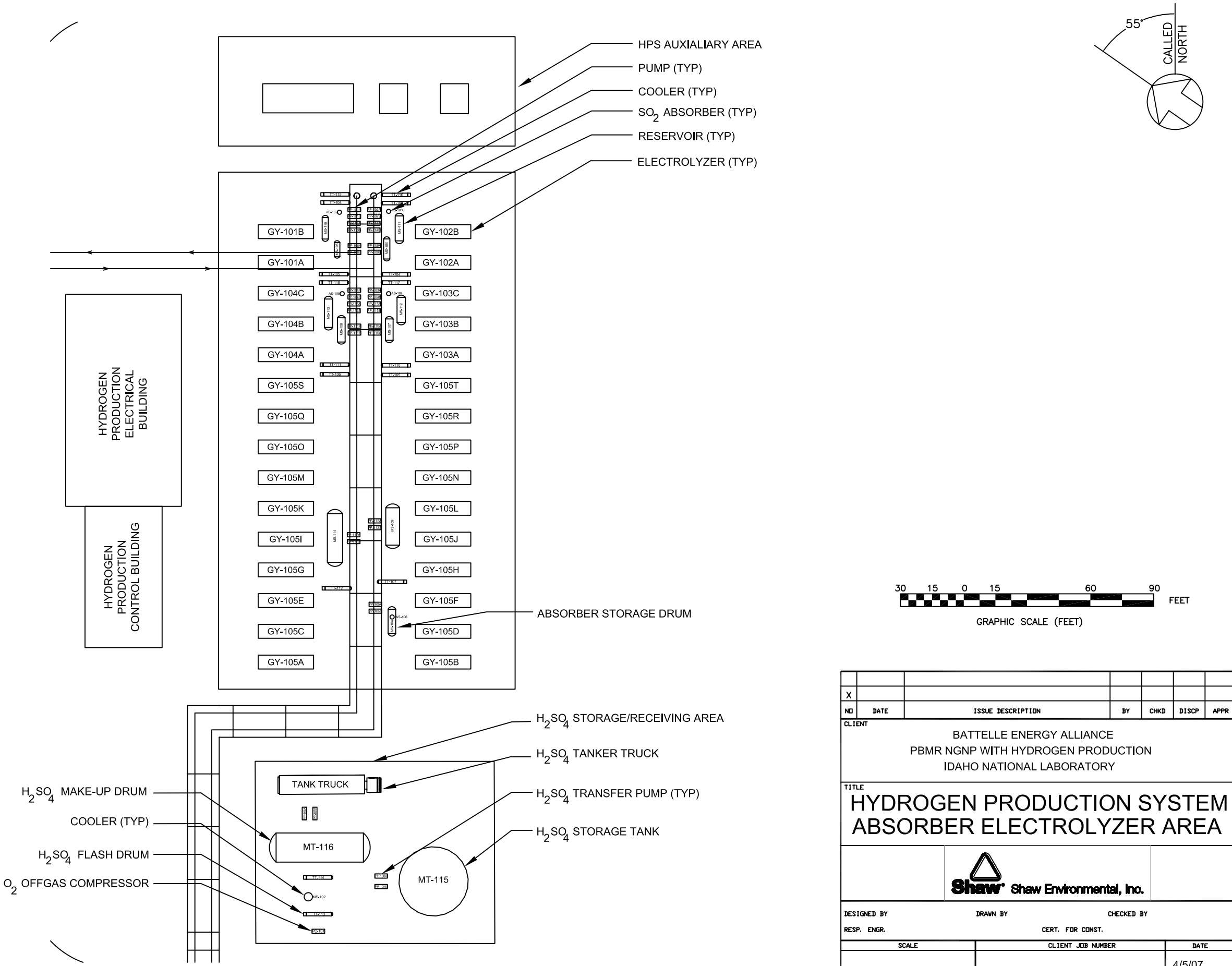

NO	DATE	ISSUE DESCRIPTION	BY	CHKD	DISCP	APPR
X						

CLIENT

BATTELLE ENERGY ALLIANCE
PBMR NGNP WITH HYDROGEN PRODUCTION
IDAHO NATIONAL LABORATORY

TITLE

HYDROGEN PRODUCTION SYSTEM ABSORBER ELECTROLYZER AREA

Shaw Environmental, Inc.

DESIGNED BY | DRAWN BY | CHECKED BY

RESP. ENGR. | CERT. FOR CONST.

SCALE	CLIENT JOB NUMBER	DATE
		4/5/07

S & W J.O. NUMBER	DRAWING NUMBER	REV NO
123910	NGNP-13-DWG-001	A

DRAWING NUMBER NGNP-13-DWG-001 REV NUMBER A

NGNP-11-RPT-001 **May 2007**
Revision 0

NGNP and Hydrogen Production Preconceptual Design Report

SECTION 11: OVERALL NGNP OPERATION

Revision 0

APPROVALS

Function	Printed Name and Signature	Date
Author	Gerard du Plessis M-Tech Industrial	May 18, 2007
Reviewer	Jan van Ravenswaay M-Tech Industrial	May 18, 2007
Approval	Michael Correia Pebble Bed Modular Reactor (Pty) Ltd	May 18, 2007

Westinghouse Electric Company LLC
Nuclear Power Plants
Post Office Box 355
Pittsburgh, PA 15230-0355

©2007 Westinghouse Electric Company LLC
All Rights Reserved

LIST OF CONTRIBUTORS

Name and Organization	Date
Jan van Ravenswaay M-Tech Industrial	May 2007
Pieter van der Westhuizen M-Tech Industrial	May 2007
Daniel Allen Technology Insights	May 2007
Hans Wolfgang Chi Technology Insights	May 2007
Niel Kemp Pebble Bed Modular Reactor (Pty) Ltd	May 2007

BACKGROUND INTELLECTUAL PROPERTY

Section	Title	Description
NONE		NONE

REVISION HISTORY

RECORD OF CHANGES

Revision No.	Revision Made by	Description	Date
0	Gerard du Plessis M-Tech Industrial	Initial Issue	May 18, 2007

DOCUMENT TRACEABILITY

Created to support the following Document(s)	Document Number	Revision
NGNP and Hydrogen Production Preconceptual Design Report	NGNP-01-RPT-001	0

TABLE OF CONTENTS

LIST OF TABLES **11-6**

LIST OF FIGURES **11-6**

11 OVERALL NGNP OPERATION **11-7**

SUMMARY AND CONCLUSIONS **11-7**

INTRODUCTION **11-8**

11.1 OVERVIEW OF OVERALL NGNP OPERATION AND PLANT SIMULATOR **11-9**

11.1.1 OVERVIEW OF OVERALL NGNP OPERATION **11-9**

11.1.2 OVERVIEW OF THE NGNP PLANT SIMULATOR **11-10**

11.2 OVERALL NGNP OPERATION **11-11**

11.2.1 OVERALL NGNP PLANT PERFORMANCE **11-11**

11.2.1.1 Nuclear Heat Supply System and Heat Transport System 11-11
11.2.1.2 Hydrogen Production System 11-11
11.2.1.3 Power Conversion System 11-12

11.2.2 NGNP INTEGRATED CONTROL PHILOSOPHY **11-12**

11.2.2.1 Nuclear Heat Supply System Control Functions 11-13
11.2.2.2 Reactor Outlet Temperature Control 11-13
11.2.2.3 Conditioning Control 11-14
11.2.2.4 Helium Pressure Control 11-14
11.2.2.5 Heat Transport System Control Functions 11-15
11.2.2.6 Hydrogen Production System Control Functions 11-15
11.2.2.7 Power Conversion System Control Functions 11-16

11.2.3 OVERALL NGNP OPERATING MODES **11-16**

11.2.3.1 Defuelled Maintenance 11-17
11.2.3.2 Fuelled Maintenance 11-17
11.2.3.3 Shutdown – Heat Sink through Core Conditioning System 11-18
11.2.3.4 Shutdown – Heat Sink through Power Conversion System 11-18
11.2.3.5 Nuclear Heat Supply System and Power Conversion System Partially Operational 11-18
11.2.3.6 Nuclear Heat Supply System and Power Conversion System Fully Operational 11-18
11.2.3.7 Hydrogen Production System Ready 11-19
11.2.3.8 Whole Plant in Operation 11-19

11.2.4 OVERALL NGNP TRANSITIONS **11-19**

11.2.4.1 Start-up (a) 11-19
11.2.4.2 Start-up (b) 11-19
11.2.4.3 Increase Power Conversion System Power 11-20
11.2.4.4 Hydrogen Production System Conditioning 11-20
11.2.4.5 Hydrogen Production System Start-up 11-20
11.2.4.6 Decrease Power Conversion System Power 11-21
11.2.4.7 Shutdown (a) 11-21
11.2.4.8 Shutdown (b) 11-21

11.2.4.9 De-fuel 11-21
11.2.4.10 Re-fuel 11-21
11.2.4.11 De-pressurize 11-21
11.2.4.12 Pressurize 11-22

11.2.5 OVERALL NGNP TRANSIENT OPERATION 11-22
11.2.5.1 Loss of Generator Load Transient 11-22
11.2.5.2 Power Conversion System Trip Transient 11-22
11.2.5.3 Nuclear Heat Supply System Trip Transient 11-23
11.2.5.4 Heat Transport System Circulator Trip 11-23
11.2.5.5 Hydrogen Production System Trip/Shutdown 11-23

11.3 NGNP PLANT SIMULATOR 11-24

11.3.1 NGNP PLANT SIMULATOR FUNCTIONS AND REQUIREMENTS 11-24
11.3.1.1 Hardware Requirements 11-24
11.3.1.2 Software Requirements 11-24

11.3.2 NGNP PLANT SIMULATOR FUNCTIONS 11-25

11.3.3 NGNP PLANT SIMULATOR DESCRIPTION 11-26

11.3.4 MAJOR SIMULATOR INTERFACES 11-26
11.3.4.1 Internal Interfaces 11-26
11.3.4.2 External Interfaces 11-26
11.3.4.3 Modules 11-26
11.3.4.4 NGNP Systems 11-27

11.3.5 PLANT SIMULATOR OPERATIONAL REQUIREMENTS 11-27
11.3.5.1 Plant Simulator System Context 11-27

11.4 DESIGN DEVELOPMENT NEEDS 11-29

11.4.1 NGNP OVERALL OPERATION DESIGN DEVELOPMENT NEEDS 11-29

11.4.2 NGNP SIMULATOR DESIGN DEVELOPMENT NEEDS 11-29

11.5 COMPLEXITY, RISKS AND FUTURE STUDIES 11-30

11.5.1 COMPLEXITY AND RISKS 11-30

11.5.2 FUTURE STUDIES 11-30

REFERENCES 11-32

LIST OF ASSUMPTIONS 11-33

APPENDICES 11-34

APPENDIX 11A NGNP OPERATIONAL MODES MATRIX 11-34

APPENDIX 11B FINAL DESIGN REPORT PRESENTATION TO BEA 11-35

LIST OF TABLES

NONE

LIST OF FIGURES

Figure 11.1-1: Schematic of the NGNP Demonstration Plant (excluding BOP) 11-9
Figure 11.2-1: Simplified Integrated Plant Control Diagram 11-13
Figure 11.2-2: Modes Diagram 11-17
Figure 11.3-1: NGNP Simulator System Context – High Level Block Diagram 11-28

11 OVERALL NGNP OPERATION

SUMMARY AND CONCLUSIONS

The integrated overall operation and the control philosophies of the Pebble Bed Modular Reactor (PBMR) based Next Generation Nuclear Plant (NGNP) are important aspects to consider during its preconceptual design phase. A high level description of the plant operation and control is required to determine whether the overall plant will be able to operate safely and reliably by taking into account the various interdependencies among the different systems. The NGNP consists of a Nuclear Heat Supply System (NHSS), Heat Transport System (HTS), Hydrogen Production System (HPS) and a Power Conversion System (PCS) that will be operated and controlled in an integrated manner.

The objective of this section is to provide a description of the integrated NGNP operational and control philosophy as well as a description of the function and requirements of the NGNP plant simulator. The overall plant modes of operation, performance and control philosophies are described. Transitions between the various modes as well as transient events are identified and described at a preconceptual design level.

Furthermore, a Plant Simulator is required to test designs and control philosophies before construction and commissioning of the NGNP. The Plant Simulator will be used to predict the plant performance during different operating modes, to develop operating procedures and to aid the design of the integrated control system. The Plant Simulator will also be used to train operators and test their skills before they operate the actual plant. Another important function of the Plant Simulator is to simulate the impact of modifications on the plant after it has been commissioned. This section will describe the functions, requirements, interfaces and operation of the Plant Simulator.

It is concluded that the NGNP demonstration plant will be able to operate in a stable and reliable manner with an inherently safe NHSS. However, the different modes of operation as well as transition and transient events should be further investigated in the conceptual design phase. An integrated simulation tool capable of simulating the steady state and transient operation of the entire plant is required to perform detailed simulations of the identified transition and transient events. The prediction of the plant performance during these events will aid in the design of the different components in the various systems. The simulation tool will also be used to test the overall control strategies of the plant. A number of future studies are therefore identified in which the above-mentioned events will be investigated in detail.

INTRODUCTION

The objective of the Overall NGNP Operation Section is to provide a description of the integrated NGNP operational and control philosophy as well as a description of the NGNP plant simulator. Various modes of operation, performance and control philosophies as defined and described for the different systems, i.e., the Nuclear Heat Supply System (NHSS), Heat Transport System (HTS), the Hydrogen Production System (HPS) and the Power Conversion System (PCS) will be integrated into an overall NGNP operational and control philosophy. This will include their interdependencies that will include the steady state, transition and transient operation suitable for a preconceptual design level.

The integrated design requirements for the NGNP simulator will be specified as well as the simulator operational requirements to ensure that the plant simulator for the NGNP can be used to:

- Design, integrate and verify plant control philosophies before plant construction and commissioning to ensure safe plant operation.
- Train plant operators and test their skill levels before they operate the actual plant.
- Test the impact of modifications on the plant after commissioning.
- Develop operating procedures.

All the Acronyms used in this section are defined in a PCDR Appendix A.

11.1 OVERVIEW OF OVERALL NGNP OPERATION AND PLANT SIMULATOR

This section presents an overview of the integrated PBMR based NGNP preconceptual overall operations as well as an overview of the NGNP plant simulator. The function of the NGNP plant simulator is described and the integrated design and operational requirements are stated.

11.1.1 Overview of Overall NGNP Operation

The PBMR based NGNP consists of a helium-cooled graphite-moderated PBMR providing heat, through the Heat Transport System (HTS), to the Hydrogen Production System (HPS) and the Power Conversion System (PCS). The heat is utilized by the HPS and PCS to produce hydrogen and electricity respectively. The NGNP demonstration plant is a single PBMR unit rated at 500 MWt. The PBMR unit supplies helium at a temperature of 950°C and pressure of 9 MPa to the Primary Heat Transport System (PHTS), which circulates the gas through an Intermediate Heat Exchanger (IHX). In the IHX, heat is transferred to the Secondary Heat Transport System (SHTS), operating at a maximum pressure of 8.5 MPa. In the SHTS heated helium is circulated through the Process Coupling Heat Exchanger (PCHX), which supplies heat to the HPS, and to the Steam Generator (SG) supplying heat to the PCS. Both the PHTS and SHTS helium circulators are powered by electrical motor drives.

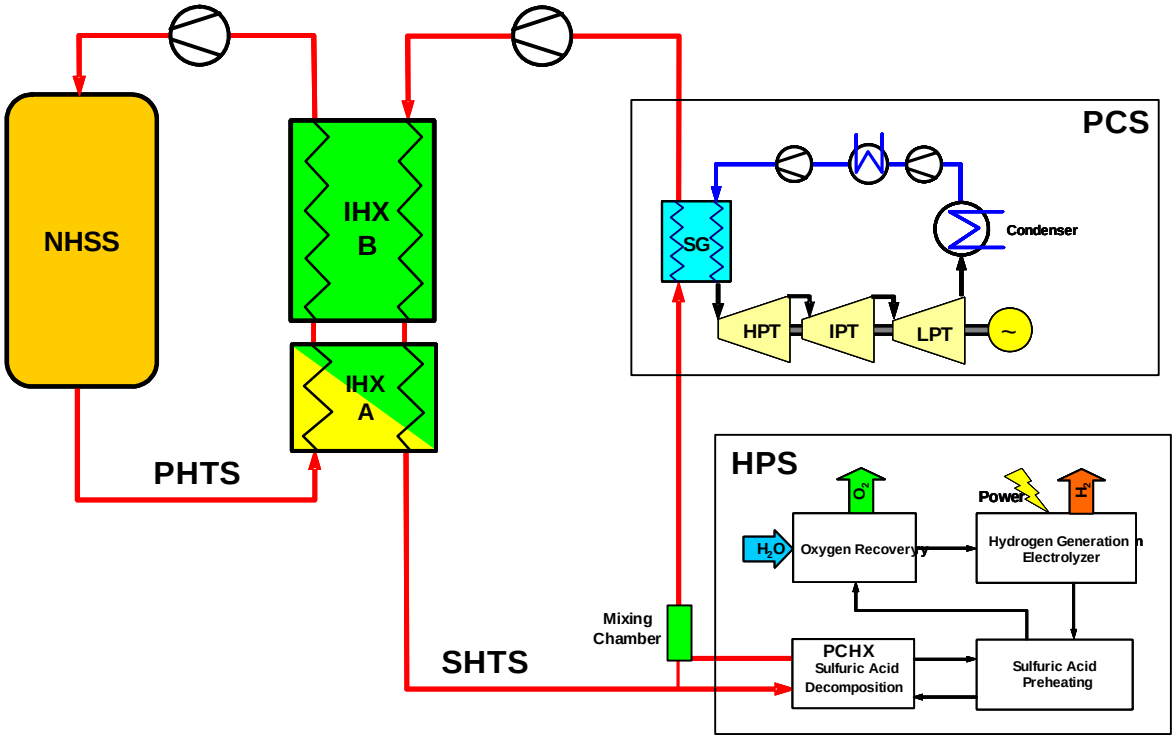

Figure 11.1-1: Schematic of the NGNP Demonstration Plant (excluding BOP)

The SHTS is designed to transport heat so that both the HPS and the PCS are in operation simultaneously or the PCS can operate on its own while the HPS is offline. It is anticipated that in general the two systems will both be in operation. A schematic of the integrated NGNP (excluding Balance of Plant (BOP)) is shown in Figure 11.1-1 (refer to Section 3).

The HPS utilizes up to 50 MWt of heat at a temperature of 900°C, supplied via the SHTS and PCHX, for a Hybrid-Sulfur (HyS) water splitting process. In the PCHX, sulfuric acid (H_2SO_4) is decomposed into sulfur dioxide (SO_2), water (H_2O) and oxygen (O_2) at a peak process temperature of approximately 827°C. The sulfur dioxide and water are cooled, additional make-up water is added and the stream at ambient temperature enters a stage of multiple electrolyzers, where electric power is used to convert the sulfur dioxide and water to sulfuric acid and hydrogen (H_2). In this HyS process, water is the feedstock and hydrogen and oxygen the products (refer to Section 7).

The PCS, comprising a Rankine cycle is designed to utilize all the heat provided by the NHSS. The SHTS transfers heat to the PCS via a SG in which steam is generated and circulated through a conventional turbine-generator-condenser system, to produce electrical power. The PCS is sized for the full thermal load (~520 MWt) of the NHSS system. However, the PCS is capable of operating over a range of thermal inputs corresponding to the HPS operating from zero to 50 MWt (refer to Section 8).

The different modes of operation, system performance, transient operation and control philosophies for the different systems, i.e., NHSS, the HTS, the HPS and the PCS, are provided in the preceding paragraphs. A high level integrated NGNP operational and control philosophy, which include the interdependencies of the different systems during steady state, transition and transient operation is provided.

11.1.2 Overview of the NGNP Plant Simulator

The NGNP Plant Simulator will provide realistic, simulated plant and control responses in a computing environment. The Plant Simulator aims to develop, test, verify and validate simulation models and modules as well as control algorithms and strategies for the NGNP. An interface will be provided, which will aid the testing, verification and validation of the Operational Control System (OCS). An Operator Training Simulator (OTS) will be provided, which in turn provides for the development, testing, verification and validation of training exercises for trainee operators. The Plant Simulator will also function as a constituent component of the OTS for the training and licensing of operators.

Another function of the Plant Simulator will be to test and design control philosophies before plant construction and commissioning to ensure safe plant operation. Furthermore, the Plant Simulator will be able to predict the impact of modifications on the plant after commissioning, train plant operators and test their skill levels before they operate the actual plant.

11.2 OVERALL NGNP OPERATION

In this section the system performance, different modes of operation, transient operation and control philosophies for the different systems are provided. A high level integrated NGNP operational and control philosophy including the interdependencies of the different systems during all modes of operation is provided.

11.2.1 Overall NGNP Plant Performance

This section provides a summary of the performance parameters for all the systems and addresses operational integration issues. The design envelope for the various components and interdependencies will be described at a preconceptual design level. This includes operation at the nominal design point and at various reduced power capabilities. Input and design uncertainties will be evaluated to determine the expected performance variance from the nominal design condition of the plant.

11.2.1.1 Nuclear Heat Supply System and Heat Transport System

The NHSS and HTS, comprising of the PHTS and SHTS, will be designed to supply a maximum of 520 MWt of heat to the PCHX/SG at ~900°C. The maximum average helium outlet temperature of the NHSS is ~950°C. The NGNP Reactor Inlet Temperature (RIT) at nominal operating conditions is ~350°C with the mass flow rate of ~160 kg/s through the NHSS (refer to Section 3). The PHTS circulator requires approximately 11 MWe and transfers approximately the same amount of power to the fluid. The IHX is therefore designed to transfer 508 MWt to the SHTS. The SHTS circulator requires approximately 12 MWe to circulate ~160 kg/s of helium at a maximum pressure of 8.5 MPa through the IHX, PCHX, SG and piping.

A few operational limits of the NHSS are listed below:

- The maximum rate of change of the Reactor Outlet Temperature (ROT) is ~100°C per hour.
- The RIT is limited to small variation since the inlet flow is in direct contact with the Reactor Pressure Vessel.
- The NHSS is limited to a mass flow of 200 kg/s at the design pressure of 9 MPa, due to velocity limitations in the reactor outlet slots.
- The Small Absorber Spheres of the Reserve Shutdown System (RSS) can only be removed at a ROT less than 550°C (Refer to Section 4).

11.2.1.2 Hydrogen Production System

The HPS receives process helium at 900°C through the NHSS and the HTS. The HPS is designed to utilize heat at a maximum rate of 50 MWt for the production of hydrogen through the HyS process. At nominal design conditions (50 MWt) the HPS outlet temperature of the PCHX after the mixer will be ~840°C. In off-design conditions the HPS can utilize any amount

of heat from 0 MWt to 50 MWt. The variation in heat utilized by the HPS influences the PCHX outlet temperature, and hence the inlet temperature to the SG.

11.2.1.3 Power Conversion System

In full electricity generation mode, the PCS receives process helium through the NHSS and HTS at 900°C. The PCS is designed to utilize the rated capacity (520 MWt) of the NHSS at 900 °C for the generation of electricity. Whenever the HPS is operational at its maximum capacity (50 MWt) the PCS receives process helium at ~840°C and utilizes the remaining 470 MWt for the generation of electricity (refer to Section 8).

11.2.2 NGNP Integrated Control Philosophy

Controllability and transient performance of the NGNP are ultimately determined by the dynamic characteristics of the NHSS, HTS, HPS and PCS. The NGNP demonstration plant has the following dominant system characteristics:

- The thermal response of the NHSS is slow, since the graphite-moderated core has a large thermal capacity relative to its heat generation and removal rates. However, the NHSS is the most critical system and will govern the overall control philosophy.
- The advantage is that the large thermal capacity of the core allows relatively fast load changes of the system without requiring fast response from the core. In principle, the energy stored in the core can be tapped or additional energy can be stored, with minimum core temperature changes. The NHSS also has a negative temperature coefficient, which results in the reactivity and consequently the neutronic power to counteract temperature changes. The NHSS is therefore to a large extent self-regulating and minimum control interaction is required to maintain the ROT at a given value.
- Another advantage is that the HTS can also be controlled easily by controlling the speed of the PHTS and SHTS circulators. A loss of outside electric load, PCS trip or HPS trip will result in temperature changes in the PCS, which will propagate to the SHTS, PHTS and the NHSS. Temperature changes can be monitored and controlled by manipulating the mass flow rates through the PCS, SHTS and PHTS.

Thus, in principle the NGNP consists of an inherently stable and slow acting NHSS coupled to a stable HTS, HPS and PCS that will require active control to remain stable under all anticipated operating scenarios.

Figure 11.2-1 shows a simplified schematic of the integrated plant control showing the sensed variables and control actions. The integrated control philosophy and interdependency of the systems will be described in the next paragraphs.

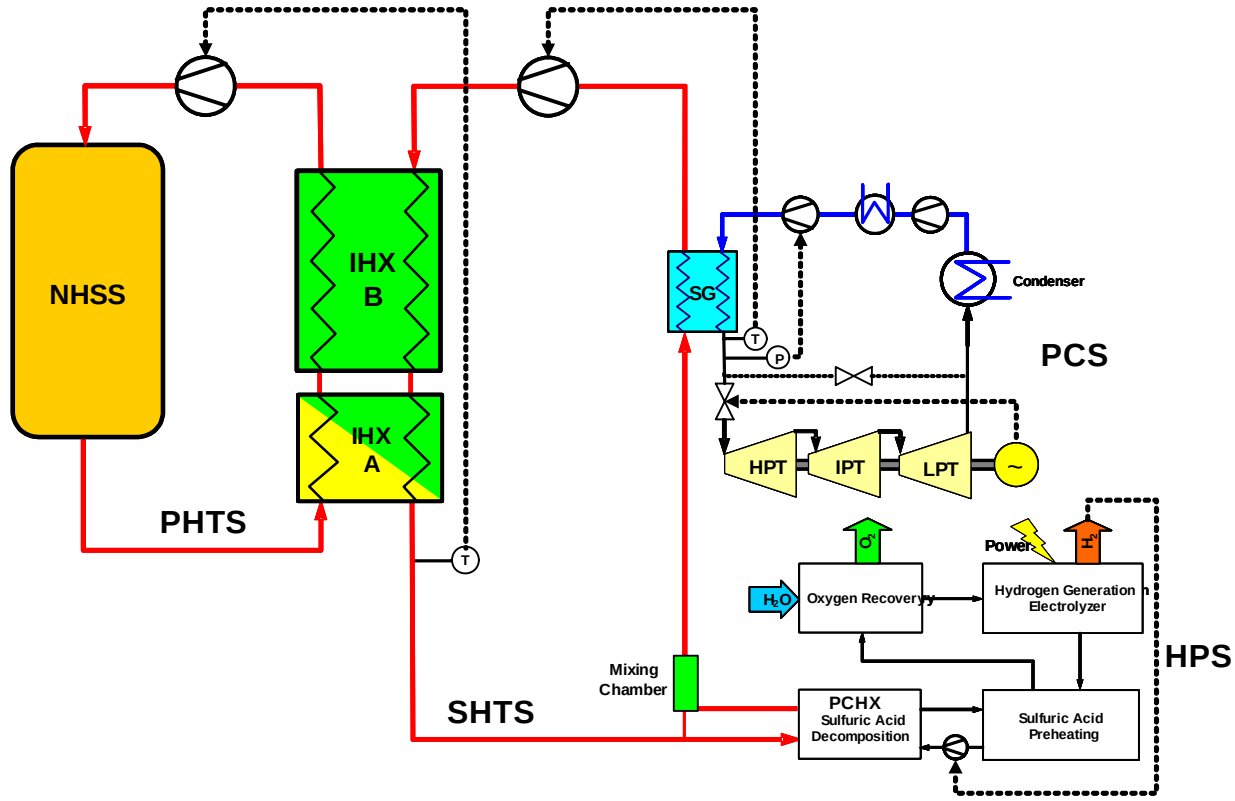

Figure 11.2-1: Simplified Integrated Plant Control Diagram

11.2.2.1 Nuclear Heat Supply System Control Functions

The primary plant wide interrelation for the control functions of the NHSS will be identified and described in this section. This will include control such as:

- Reactor Outlet Temperature Control
- Conditioning Control
- Helium Pressure Control

11.2.2.2 Reactor Outlet Temperature Control

In order to achieve stable operation and for component protection the ROT is controlled. The ROT is usually controlled to a specific value and during certain transitions and modes of operation the outlet temperature can be ramped at a given rate of temperature increase or decrease. The ROT can be controlled when the NHSS is critical or when it is sub-critical. The control differs in these two cases.

When the NHSS is critical, the ROT is controlled using the control rods. The ROT is measured together with the NHSS neutronic power and the NHSS fluidic power. The neutronic power is derived from the neutron flux measurement. The NHSS fluidic power is calculated

using the NHSS inlet and outlet temperatures and the helium mass flow rate through the NHSS. This is known as ROT reactivity control.

When the NHSS is sub-critical, the ROT is controlled using the speed of the Core Conditioning System (CCS) or PHTS circulator. When the CCS is used to control the ROT, the ROT is measured. By changing the speed of the CCS circulator, the mass flow rate through the NHSS can be adjusted, which in turn determines the heat removed from the NHSS, thereby controlling the ROT. Whenever the PHTS circulator is used to control the ROT, the circulator is run at a fixed, reduced speed to induce sufficient mass flow through the NHSS to remove enough heat from the NHSS to keep the ROT under a predetermined value. This mode of ROT control is known as ROT decay heat control.

11.2.2.3 Conditioning Control

During start-up transitions, the components of the different systems need to be conditioned to specified temperature levels before the systems can be operated at full capacity. The HTS will be conditioned by running the PHTS and SHTS circulators at low speeds during start-up. This will result in some of the nuclear generated heat being transferred to the HTS, PCS and HPS components. As soon as the specified temperatures for the different systems are reached, a control signal will be generated that indicates that the plant is ready for start-up.

Before the HPS start-up transition can be initiated, the HPS needs to be conditioned. The allowable temperature ramp rates that the HPS can withstand together with the component temperatures required for start-up initiation will be determined by a future study listed in Section 11.5.2. The conditioning of the HPS will be controlled to take place during start-up of the NHSS and PCS.

11.2.2.4 Helium Pressure Control

The pressure in the PHTS and SHTS will be controlled by utilizing the Pressure Control System, which is a subsystem of the Helium Service System (HSS). The HSS will govern and control the amount of helium (pressure) in the PHTS and SHTS according to predefined pressure set-points for the PHTS and SHTS. During normal operation the plant will generally operate at the rated pressure levels and very little pressure control actions are envisioned. However, during plant start-up, transitions and transient events, pressure control is an important control function. The HSS will be responsible for controlling the pressure in such a way that the pressure differentials across the components in the HTS (especially the IHX, PCHX and SG) remain within specified limits to avoid operation of the components outside their design envelopes. The HSS will control the pressure inside the HTS by injecting/extracting helium from/to a higher/lower pressure source.

The HSS will also be responsible for helium storage and depressurization of the PHTS and SHTS during maintenance. Before open maintenance on the HTS can commence, the HSS will reduce the pressure by extracting the helium to a lower pressure sink and storing it for future injection.

11.2.2.5 Heat Transport System Control Functions

The major control functions of the HTS consist of speed control of the PHTS and SHTS circulators. The speeds at which the circulators are operated will be used to control certain temperatures by varying the flow rates through the PHTS and SHTS respectively.

The SHTS circulator will primarily receive control inputs from the PCS. The circulator speed will be governed by the steam temperature at the outlet of the SG as shown by Figure 11.2-1. If the steam temperature increases the speed of the SHTS circulator will be decreased, resulting in a reduction in the SHTS mass flow rate. The SG will receive less thermal power and the SG outlet temperature will return to its set-point value. If the steam temperature decreases, the speed of the SHTS circulator will be increased, resulting in an increase in the SHTS mass flow rate. The SG will receive more thermal power and the SG outlet temperature will return to its set-point value.

The PHTS circulator will primarily receive control inputs from the SHTS. The circulator speed will be governed by the helium temperature at the outlet of the IHX on the secondary side as shown by Figure 11.2-1. For a reduction of SHTS circulator speed the temperature at the outlet of the IHX (secondary side) will start to increase. As the temperature increases the speed of the PHTS circulator will be reduced resulting in a reduced mass flow rate through the PHTS. The IHX will receive less thermal power from the PHTS and the IHX outlet temperature (secondary side) will return to its set-point value. If the SHTS circulator speed is increased the temperature at the outlet of the IHX (secondary side) will start to decrease. As the temperature decreases, the speed of the PHTS circulator will be increased resulting in an increase in mass flow through the PHTS. The IHX will receive more thermal power from the PHTS and the IHX outlet temperature (secondary side) will return to its set-point value. The change in mass flow rate through the PHTS will affect the ROT. Since the NHSS has a negative temperature coefficient the reactivity and consequently the neutronic power will counteract any temperature changes caused by a slight change in the mass flow rate through the PHTS. The NHSS will therefore to a large extent regulate the ROT inherently and the minimum control interaction will be required to maintain the ROT at a given value. Should any control interaction be required to control the ROT, the NHSS control rods will be used as described in Section 11.2.2.2.

11.2.2.6 Hydrogen Production System Control Functions

The major control functions of the HPS consist of the control of the amount of sulfuric acid pumped to the PCHX (decomposition reactor). By controlling the speed of the pumps that supply the PCHX with sulfuric acid, the amount of hydrogen produced by the HPS is regulated as shown by Figure 11.2-1. By controlling the amount of hydrogen produced, the amount of heat required by the HPS is indirectly controlled and therefore the helium outlet temperature of the PCHX.

The set-point at which the HPS will operate (0-50MWt) will also determine the set-point at which the PCS will operate. If the HPS is not operational, the PCHX set-point will be 0 MWt. In contrast to this the set-point of the PCS will be set to the maximum rated capacity. Whenever

the HPS set-point is increased, the amount of sulfuric acid pumped to the PCHX will increase and the PCS set-point will be decreased to the corresponding level.

11.2.2.7 Power Conversion System Control Functions

The primary control functions for the PCS will be identified and described in this section. The overall plant control starts with the PCS control. The power output of the turbine-generator will be set to a fixed output in order to provide the required NGNP house load and to provide base load to the electrical grid. During transient events, including an increase or decrease in the amount of thermal power required by the HPS, the PCS will have to react accordingly. The turbine-generator power output is controlled by adjusting the turbine inlet valve as shown by Figure 11.2-1. The valve will control the mass flow rate through the turbine-generator, hence the power output.

The main steam pressure is maintained constant over the load range by adjusting the feed water flow as shown by Figure 11.2-1. The main steam temperature is maintained constant over the load range by adjusting the SHTS circulator speed.

11.2.3 Overall NGNP Operating Modes

This section describes the integrated modes and control philosophy for the whole NGNP at a high level. Figure 11.2-2 shows the primary modes diagram for the NGNP demonstration plant.

The NGNP demonstration plant is configured such that the HPS will not be operational while the PCS is shut down other than during a transient event in which the PCS has tripped. Therefore, there is no mode defined for the NGNP in which the HPS is operational with the PCS shut down. However, for the NGNP commercial plant it is anticipated that it would be possible to have the HPS in operation with the PCS shut down. In such a case the NHSS, HTS and HPS would utilize electricity from an external source. The transitions associated with the above-mentioned operation will be investigated in more detail during the conceptual design phase as described in Section 11.5.2. The PCS of the NGNP demonstration plant is designed to utilize the full capacity of the heat generated in the NHSS; the plant will have an operating mode in which the PCS is operational and the HPS is shut down. The following paragraphs describe the primary modes of operation as shown by Figure 11.2-2. A matrix indicating important parameters of the different systems during the different modes of operation is provided by Appendix A.

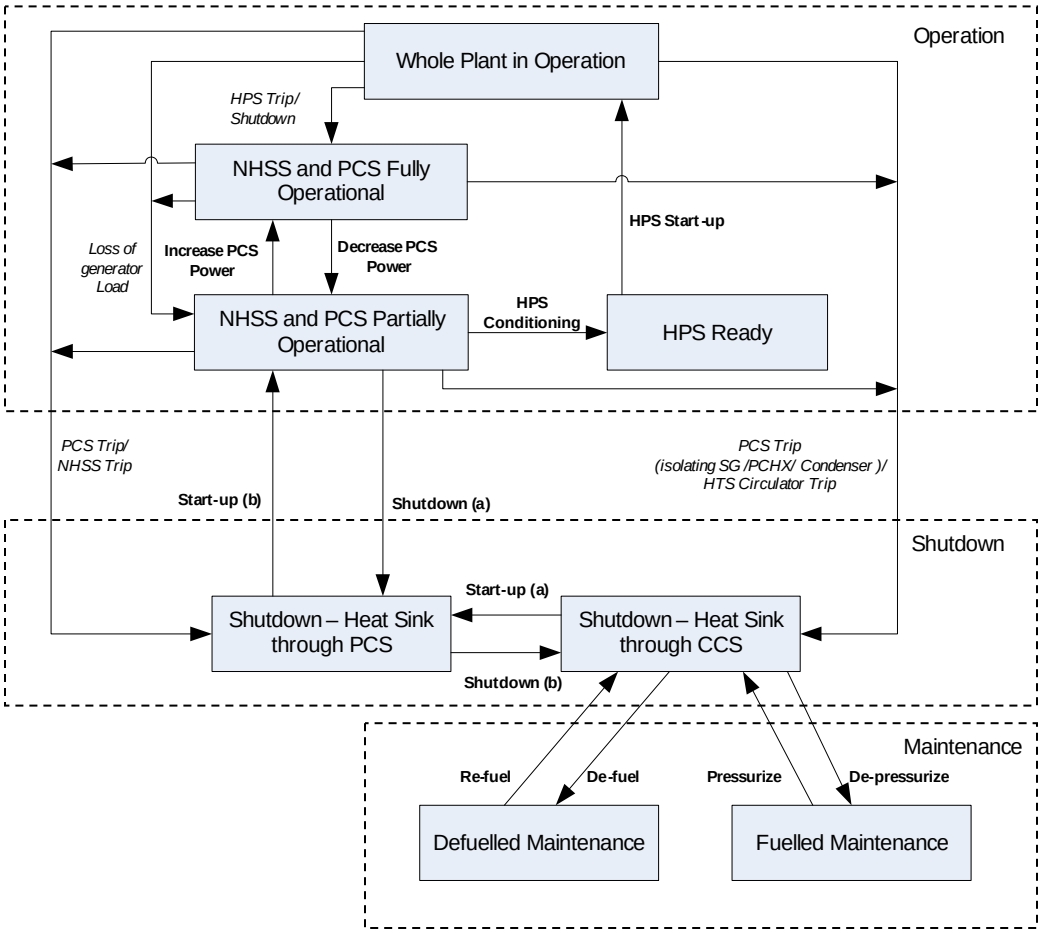

Figure 11.2-2: Modes Diagram[1]

11.2.3.1 Defuelled Maintenance

The NHSS is sub-critical in this mode. In this mode planned and unplanned maintenance activities requiring a defuelled NHSS can be performed. In this mode the core contains no fuel and the NHSS is not pressurized. The PHTS and SHTS circulators are not operational and the HPS and PCS are shut down.

11.2.3.2 Fuelled Maintenance

This mode of operation is associated with maintenance activities performed while the NHSS is fuelled. The NHSS is sub-critical in this mode. The reactor is kept sub-critical by the RSS and the RCS. The CCS is operational in this mode and removes decay heat generated within the NHSS. The NHSS and HTS are de-pressurized in this mode. Since the NHSS could be open in this mode during certain maintenance activities such as; maintenance on the PHTS, the primary coolant could be either helium or possibly air if core temperatures are less than

[1] Bold text indicates transitions between different modes. Italic text indicates transient events.

300°C. In this mode the PHTS and SHTS circulators are not operational and the HPS and PCS are shut down.

11.2.3.3 Shutdown – Heat Sink through Core Conditioning System

The NHSS is sub-critical in this mode. The NHSS is kept sub-critical by the RSS and the RCS. For longer, cold shut-downs the RSS is used in combination with the RCS, while only the RCS is used for shorter shut down periods. The primary coolant circuit is filled with helium.

In this mode the CCS is operational. The heat generated in the NHSS in this mode is due to decay heat only and is rejected by the CCS. By controlling the speed of the CCS circulator (and therefore the mass flow rate through the core) the amount of decay heat removed from the reactor can be controlled. The SHTS and PHTS circulators are not operational and the PCS and HPS are shut down.

11.2.3.4 Shutdown – Heat Sink through Power Conversion System

The NHSS is sub-critical in this mode. The NHSS is kept sub-critical by the RSS and the RCS (in combination or only the RCS).

In this mode the HTS, comprising the PHTS and SHTS is operational. The heat generated in the NHSS in this mode is due to decay heat only. By controlling the speed of the PHTS circulator the amount of decay heat removed from the reactor can be controlled. Decay heat is transported by the PHTS to the SHTS via the IHX. The SHTS transports the heat received from the IHX to the SG. Water is circulated through the SG by the steam cycle feed water pumps. The turbine-generator is bypassed and the heat is rejected to atmosphere by the PCS condenser. The HPS is not operational in this mode.

11.2.3.5 Nuclear Heat Supply System and Power Conversion System Partially Operational

In this mode the NHSS is critical and the ROT is controlled by the RCS. The HTS is operational and nuclear generated heat is transported via the HTS to the PCHX and the SG. The PCS is operating at a reduced power level with the HPS not operating. Lower power operation is achieved by controlling the speed of the PHTS and SHTS circulators. The transition to and from this mode of operation as well as the control strategy in this mode of operation will be further investigated in the conceptual design phase as described in Section 11.5.2.

11.2.3.6 Nuclear Heat Supply System and Power Conversion System Fully Operational

In this mode the NHSS is critical and the ROT is controlled by the RCS. The HTS is operational and nuclear generated heat is transported via the HTS to the PCHX and the SG. The PCS is operating at the maximum power level with the HPS shut down.

11.2.3.7 Hydrogen Production System Ready

In this mode the NHSS is critical with the RCS controlling the ROT. The HTS and the PCS are operational at a reduced power level. The HPS is conditioned and the HPS Start-up transition can be initiated, since the condition of the HPS components are within predefined start-up margins.

11.2.3.8 Whole Plant in Operation

This is a mode in which the NHSS is critical, and the HTS, PCS and HPS are operational. The PCS generates sufficient electricity for the entire plant house load. The excess electricity generated by the PCS is exported to the grid with the HPS operating at the required rating, producing hydrogen in accordance with the amount of heat transferred to the PCHX. The PCS operates at a reduced power output level in accordance with the amount of heat utilized by the HPS.

11.2.4 Overall NGNP Transitions

The following paragraphs describe the transitions between the different modes of operation as shown by Figure 11.2-2. Transitions are normal operations taking the plant from one mode to the next.

11.2.4.1 Start-up (a)

When this transition is initiated the NHSS is in the Shutdown – Heat Sink through CCS mode. At the start of this transition the NHSS is sub-critical. During this transition the heat transfer mechanism is transferred from the CCS to the PCS. Before this can happen the SHTS and the PHTS have to be conditioned in order to prevent thermal shock on the HTS components. The circulator of the PHTS is therefore switched on at low speed in order to transfer some of the decay heat to the PHTS components. The SHTS components also need conditioning before the fully rated nuclear generated heat can be transferred from the PHTS to the SHTS. The SHTS components are conditioned by operating the SHTS circulator at low speeds while transferring heat from the IHX to SHTS components. This is done while water is passed through the SG in the PCS and bypassing the turbine-generator. At this point external electrical power is required to drive the different components during start-up, since the PCS is not generating any electricity. At the end of this transition the decay heat is rejected by the PCS condenser instead of the CCS.

11.2.4.2 Start-up (b)

When this transition is initiated the NHSS is sub-critical. Water is passed through the SG with the turbine-generator bypassed. Decay heat is rejected by the PCS condenser. The power level of the NHSS is increased to a predetermined level in order to initiate steam generation in the SG. As soon as the system has stabilized SG boil out commences. Steam is generated in the SG and bypassed to the condenser until the threshold steam temperature has been reached. This is done at the rated steam pressure to ensure that the boiling takes part in the correct part of the

SG. The NHSS is made critical by switching the ROT controller from the ROT decay heat controller to the ROT reactivity controller that manipulates the control rods. The RCS control rods are used for reactivity adjustment. The nuclear generated heat production is ramped up with the HTS circulators at low speed to increase the RIT as far as possible.

As soon the threshold steam temperature has been reached steam is passed through the PCS turbine-generator which is started and synchronized to the electrical grid. As the nuclear generated heat is ramped up further, the speed of the PHTS and SHTS circulators will be increased in order to reach the rated ROT and RIT. This is continued until the rated steam temperatures are reached at the minimum turbine-generator power output.

11.2.4.3 Increase Power Conversion System Power

During this transition the nuclear heat generation is ramped up to the rated output. This PCS power output is ramped up to the rated output. The HPS is not in operation during this transition.

11.2.4.4 Hydrogen Production System Conditioning

This transition occurs when the NHSS, HTS and the PCS are operational at the minimum turbine-generator power output and the HPS is conditioned. When this transition is initiated the HPS can circulate acid at near atmospheric pressure through the PCHX (decomposition reactor), concentrator and recuperator to and from the acid storage tank with the acid recycle pump. Heat would be rejected through a loop cooling the input to the acid storage tank. By doing this the HPS components are conditioned to avoid the thermal shock of flooding a heated, dry PCHX with cold acid at the rated HTS temperatures.

11.2.4.5 Hydrogen Production System Start-up

This transition occurs when the NHSS, HTS and the PCS are operational at the minimum turbine-generator power output and the HPS is ready (conditioned) for start-up. Acid will boil in the PCHX at ~125°C at atmospheric pressure. After the decomposition reactor has boiled out as the incoming SHTS temperature increases, the pressure on the acid side is raised to maintain the desired phases in the decomposition reactor, the absorber and the recuperator.

As the PCS and NHSS ramp up, SO_2 would be produced. Electrolyzers would be i) left off, and acid would be wasted while SO_2 accumulated[2] or ii) brought on and H_2 would be produced. Meanwhile, the heat dump from the acid storage tank declines to zero.

[2] Most likely the SO_2 would be scrubbed with water and discarded. Dissolved in water it could be later heated and recovered, but this is uneconomical. Since the boiling point of SO_2 is -10°C, it could be condensed in a refrigerated tank instead of scrubbing and stored for later electrolysis, but this requires an expensive subsystem.

11.2.4.6 Decrease Power Conversion System Power

This transition takes place between the NHSS and PCS Fully Operational mode and the NHSS and PCS Partially Operational mode. The power output set-point of the PCS is reduced and the PCS is controlled to deliver the required power output.

11.2.4.7 Shutdown (a)

This transition occurs when the NHSS and the PCS are shut down. The PCS power output is ramped down to the minimum power output by bypassing some of the high-pressure steam from the outlet of the SG directly to the condenser. The NHSS is shut down by activating the three reactivity control devices (acting independently or in combination) namely; the RSS, the shutdown rods and the control rods, which form the RCS. These systems keep the NHSS sub-critical. Generally only the control and shutdown rods will be used to shut down the NHSS. The RSS is only used for longer term cold shutdown. After the NHSS has shut down, the turbine-generator of the PCS is bypassed entirely and the PCS is shut down. The decay heat is rejected via the PCS condenser.

11.2.4.8 Shutdown (b)

This transition occurs between the Shutdown – Heat Sink trough PCS mode and the Shutdown – Heat Sink trough CCS mode. The decay heat rejection is transferred from the PCS condenser to the CCS. The decay heat is rejected through the CCS heat exchangers.

11.2.4.9 De-fuel

This transition takes the plant from the Shutdown – Heat Sink through CCS mode to the Defuelled Maintenance mode. During this transition the reactor is defuelled for maintenance after any infrequent maintenance that requires a defuelled NHSS. The NHSS is de-pressurized by extracting helium from the PHTS pressure boundary to the pressure control system.

11.2.4.10 Re-fuel

This transition takes the plant from the Defuelled Maintenance mode to the Shutdown – Heat Sink through CCS mode. This transition occurs after any infrequent maintenance (e.g. reflector replacement) has been performed that requires a defuelled reactor. During this transition the NHSS is refueled and pressurized by injecting helium from the Pressure Control System into the PHTS pressure boundary.

11.2.4.11 De-pressurize

This transition is from Shutdown – Heat Sink through CCS to Fuelled Maintenance. Helium is extracted from the PHTS and SHTS into the helium inventory tanks. This transition takes place before planned/unplanned maintenance activities can be performed in which the NHSS remains filled with nuclear fuel.

11.2.4.12 Pressurize

This transition is from the Fuelled Maintenance mode to Shutdown – Heat Sink through CCS mode. Helium is injected into the PHTS and SHTS from the helium inventory tanks. This transition is initiated after planned/unplanned maintenance has been performed on the plant while the NHSS remained filled with nuclear fuel.

11.2.5 Overall NGNP Transient Operation

The primary transient events and their inter-relations with the other systems will be identified and described in this section. Transient events are mode or mode transitions that should be avoided; however the plant must still be designed to accommodate these transients. These transients include the following:

- Loss of generator load transient.
- PCS trip transient.
- NHSS trip transient.
- HTS Circulator trip.
- Hydrogen Production System trip/shutdown.

11.2.5.1 Loss of Generator Load Transient

The plant enters this transient when an over-speed is detected in the Whole Plant in Operation/NHSS and PCS Fully Operational mode. A loss of load transient is caused by loss of load on the generator resulting in an acceleration of the turbine-generator. The sequence of events that occurs during a loss of load transient is as follows:

- Abnormal turbine shaft acceleration is detected.
- The turbine-generator governor controls the turbine intercept valve and the main steam bypass valve. The steam mass flow through the turbine is reduced (reduced power output). The PCS is required to runback to the required house load power level.
- The feed water pumps are controlled according to the SG outlet pressure.
- The power level of the NHSS is controlled by the control rods.
- The excess heat in the NHSS and SG is rejected through the PCS condenser.
- HPS shutdown is initiated.

At the end of this transient the plant is in the NHSS and PCS Partially Operational mode.

11.2.5.2 Power Conversion System Trip Transient

This transient occurs when there is a fault within the PCS. When a PCS trip signal is generated the following events will occur:

- The plant mode will change from Whole plant in Operation/NHSS and PCS Fully/Partially Operational mode to the Shutdown – Heat Sink through PCS or the Shutdown – Heat Sink through CCS mode depending on the specific fault condition. In situations where the SG or the PCS condenser is isolated, the plant will reject the nuclear generated heat through the CCS. In situations where the condenser can still be utilized, the plant will reject the nuclear generated heat through the PCS condenser.
- HPS shutdown is initiated.

11.2.5.3 Nuclear Heat Supply System Trip Transient

This transient occurs when there is a fault within the NHSS. When a NHSS trip signal is generated the following events will occur:

- The plant mode will change from the Whole plant in Operation/NHSS and PCS Fully/Partially Operational mode to the Shutdown – Heat Sink through PCS mode.
- The NHSS is shut down by activating the control and shutdown rods (acting in combination).
- HPS shutdown is initiated.
- The turbine-generator is bypassed.
- The nuclear generated heat from the NHSS is rejected via the PCS condenser.

11.2.5.4 Heat Transport System Circulator Trip

This transient is caused by a trip of the PHTS circulator and/or the SHTS circulator. As soon as one or both of the circulators trip, the PCS and HPS are isolated from the NHSS. Nuclear generated heat can therefore not be removed by the PCS or the HPS. During this transient the plant mode will change from Whole plant in Operation/NHSS and PCS Fully/Partially Operational to the Shutdown – Heat Sink through CCS mode. The nuclear generated heat will be rejected via the CCS. The following events will follow this transient:

- The NHSS is shut down.
- CCS will be activated.
- HPS shutdown is initiated.
- PCS shutdown is initiated (turbine-generator bypassed).
- The circulator which is still in operation will be shut down (if only one circulator has tripped).

11.2.5.5 Hydrogen Production System Trip/Shutdown

This transient occurs when the HPS trips or is shut down. The plant mode will change from the Whole plant in Operation mode to the NHSS and PCS Fully Operational mode. The power output set-point of the PCS will be increased to the full capacity, since more heat is available for electricity generation.

In order to restart the HPS the NHSS will have to be shut down for the following reasons:

- When the electrolyzers shut down and the acid feed to the PCHX continues, SO_2 storage will have to be provided. Since no SO_2 is stored, the acid flow to the PCHX will have to be stopped.
- As soon as the acid flow to the PCHX stops, the PCHX boils out. It is unlikely that the PCHX tubes will tolerate the thermal shock of re-flooding the PCHX with cold acid.

Therefore, the NHSS will have to be shut down in order to restart the HPS after a HPS trip or shutdown.

11.3 NGNP PLANT SIMULATOR

This section defines the functions and requirements of the NGNP Plant Simulator. This includes the communication backbone; the scheduling and synchronizing of the simulator components through control signals and messages; the specification of user controls in the simulator through the Operating, Instructor and Engineering Stations; communication between the simulator components and the database; and various other requirements. The requirements for the software to be used in the NGNP Plant Simulator for the modeling and simulation of the various systems will also be addressed.

11.3.1 NGNP Plant Simulator Functions and Requirements

11.3.1.1 Hardware Requirements

The following paragraph describes the Plant Simulator hardware requirements.

The Plant Simulator hardware platforms shall consist of rack mounted servers or workstations which enable the system to at least achieve deterministic real-time execution, with all instructor and operator consoles active and with full graphic functionality. It is assumed that all the hardware required to achieve the functional requirements as specified in this section shall be readily available and supported in the United States of America. The system shall be free standing, such that the hardware is transportable to alternative locations. The operating system(s) shall be industry standard and locally supported. The reserve capacity of the system, as measured by CPU utilization while processing the real-time simulation load for the entire plant under steady state conditions, shall be at least 20 percent.

11.3.1.2 Software Requirements

The following paragraph describes the Plant Simulator software requirements. The required software comprises an Instructor/Engineering Station (IS), data management and information management system.

Instructor/Engineering Station

The functionality of the Instructor Station should include at least the following modules:

- Scenario Management
- Fast and Slow Time Run Options
- Malfunctions
- External Parameters Adjustment
- Snapshots Functionality
- Backtrack Functionality
- Event Trigger Definitions
- Console Display Facilities
- Human-System-Interface Design
- Classification

Data Management

The Plant Simulator shall provide facilities for the analysis and verification of simulation data.

Information Management

The records, drawings and specifications resulting from this specification shall be handled in accordance with a configuration management plan.

11.3.2 NGNP Plant Simulator Functions

The purpose of the Plant Simulator for the NGNP is to provide realistic, simulated plant and control responses in a computing environment. The functions of the Plant Simulator will include:

- The development, testing, verification, and validation of simulation models and modules for the NGNP as well as for the control algorithms and strategies for plant operation.
- The provision of an interface aiding the testing, verification and validation of the OCS.
- The provision of simulated plant and control characteristics for the OTS. The OTS in turn provides for the development, testing, verification and validation of training exercises for trainee operators.
- Function as a constituent component of the OTS for the training and licensing of operators.
- Test designs and control philosophies before plant construction and commissioning to ensure safe plant operation.
- Test the impact of modifications on the plant after commissioning.
- Train plant operators and test their skill levels before they operate the actual plant.

11.3.3 NGNP Plant Simulator Description

The Training Facility contains replicas of the components found in the Control Room of the reference plant. Its look, feel and operation resemble that of the corresponding facilities of the reference plant. The Plant Simulator utilizes these components to provide realistic, simulated plant behavior to trainee control room operators and engineers, under control of the Instructor/Engineering Station. During an engineering session, engineers and modeling engineers develop, test and adapt simulation models and control strategies in a process of iterative refinement. During a training session, the instructor utilizes the equipment to train control room operators in the operation of the NGNP. The Plant Simulator is additionally capable of analyzing and presenting the results of the training session to the instructor and trainee.

11.3.4 Major Simulator Interfaces

The purpose of this section is to define the different Plant Simulator interfaces. A layout of the proposed Plant Simulator will be developed showing the various modules of the simulator and their communication interfaces. Scoping studies need to be performed to verify the feasibility of various approaches and techniques used to couple thermal-fluid and chemical modeling tools.

11.3.4.1 Internal Interfaces

The internal interfaces of the NGNP simulator must include at least the Control Room Replica and Control Emulation System (CES) Interface as well as the CES and Plant Simulator interface.

11.3.4.2 External Interfaces

These interfaces are the Engineer's interaction with the Plant Simulator through the Instructor/Engineering Station and the Modeling Engineer's interaction with the Plant Simulator.

11.3.4.3 Modules

Suggested System Modules for the NGNP Plant Simulator are:

- Training Facility.
- Operator Training Simulator.
- Plant Simulator.
- Control Room Replica.
- Control Emulation System.

11.3.4.4 NGNP Systems

The Plant Simulator shall simulate all plant areas and systems of the NGNP Plant on an appropriate detail level as applicable. The subsystems include the NHSS, HTS, HPS, PCS and the BOP. The level of detail of the simulated subsystems will be defined in future studies.

11.3.5 Plant Simulator Operational Requirements

This section describes the operational requirements of the NGNP Plant Simulator. The operation requirements of the Plant Simulator include the following:

- Simulates all sensors and actuators.
- Emulates the dynamic behavior of the plant within its measurement and control range.
- Simulates component- or operator-induced traversal of the operational modes of the NGNP.
- Simulates appropriate component malfunctions within the various operational modes.
- Synchronizing of the Plant Simulator to the actual plant via unidirectional data flow from the plant instrumentation to the Plant Simulator. This will allow the Plant Simulator to run what-if scenarios with actual plant conditions.
- Provides facilities for controlling the simulation, including the starting, stopping, pausing, and replay of simulated sequences.
- Provides facilities for the storing and loading of scenarios, and the induction of malfunctions and remote functions.

11.3.5.1 Plant Simulator System Context

The Plant Simulator forms the principle building block of the OTS, as is shown in Figure 11.3-1.

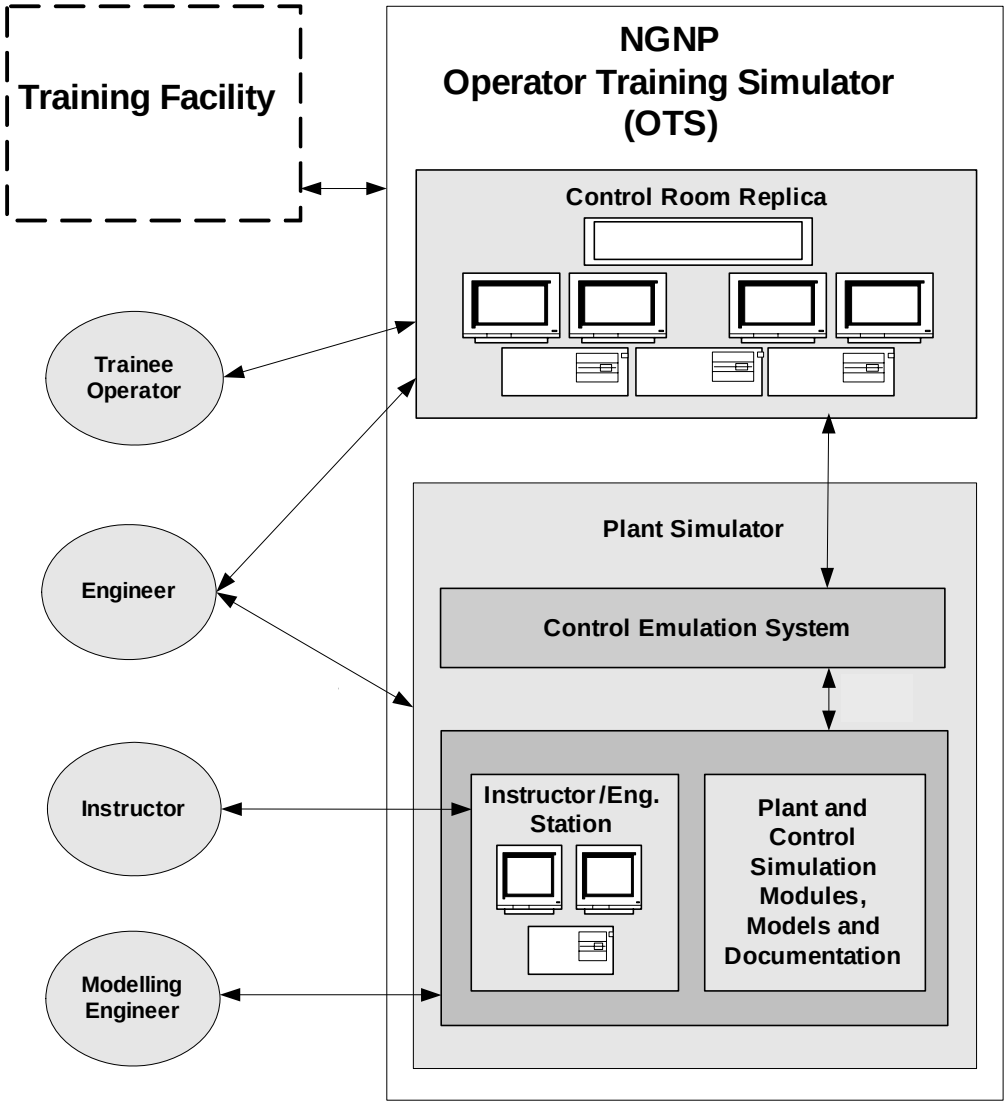

Figure 11.3-1: NGNP Simulator System Context – High Level Block Diagram

11.4 DESIGN DEVELOPMENT NEEDS

Possible Design Development Needs (DDNs) stemming from the Overall Operation and NGNP Simulator requirement will be listed in this section.

11.4.1 NGNP Overall Operation Design Development Needs

NONE

11.4.2 NGNP Simulator Design Development Needs

NONE

11.5 COMPLEXITY, RISKS AND FUTURE STUDIES

The following section describes the complexity and risks associated with the overall operation of the NGNP as well as the NGNP Plant Simulator. The section also identifies a number of future studies addressing the identified complexities and risks.

11.5.1 Complexity and Risks

There exist a number of complexities and risks associated with the overall operation of the NGNP. The NGNP consists of a number of systems that have to be operated and controlled in an integrated manner. The overall operation and control of the plant therefore has to be designed in such a way to accommodate all the different interdependencies among the different systems. Transition and transient events need to be investigated to identify certain component design criteria using an integrated simulation tool. In order to achieve this, an integrated simulation tool needs to be developed. This tool also needs to be verified and validated to ensure accurate simulation of the NGNP.

The return flow to the reactor flows directly against the Reactor Pressure Vessel wall and therefore limits the variations allowable on the RIT, before the Reactor Pressure Vessel material limits are exceeded.

In some modes of operation the SG will operate at a helium inlet temperature of 900°C for extended periods of time.

11.5.2 Future Studies

Considering the above-mentioned complexities and risks a number of future studies are identified:

Develop integrated simulation tool

A need exists for a comprehensive computational model of the NGNP plant. An integrated simulation tool needs to be developed in order to set-up an integrated model of the NGNP including the NHSS, HTS, PCS, HPS and BOP systems. This tool should be able to model the performance of the actual plant in steady state mode as well as during transitions and transient events. The tool should also be to model proposed control strategies to verify the adequacy the integrated control philosophy. The model will also serve to develop plant simulations for planning of operations and for operator training.

Update modes diagram

The modes diagram presented by Figure 11.2-2 should be updated and expanded in the conceptual design phase. The primary transitions and transient events should be identified together with all the required control functions. The integrated control philosophy should be evaluated and optimized during the conceptual design phase.

Determine the expected RIT variations

Determine the expected RIT variations expected during the expected operating transitions and transients.

Simulate steady state, transitions and transient events

The above-mentioned simulation tool will be used to simulate steady state conditions, transitions and expected transients. The model should also be used to evaluate the integrated control philosophy and control functions of the different systems during the conceptual design phase to serve as input to component design in the basic and detail design phases.

Specific transitions and transient events for early investigation

Various specific transitions and transient events are identified for early investigation:

1. Simulate the start-up transitions in order to determine the operating conditions of the different systems and components of the NGNP during start-up.
2. Test the integrated control strategy to investigate interdependencies among the different systems.
3. Determine equipment protection requirements from above-mentioned transient analyses results.
4. Investigate the HPS conditioning and start-up transitions with specific focus on the operating conditions in the decomposition reactor.
5. Another future study is required to determine the level of detail in which the different NGNP systems need to be modeled in order to achieve accurate predictions of the actual NGNP performance within realistic computation time within the Plant Simulator.

Steam Generator operating conditions

The SG will operate at helium inlet temperatures of up to 900°C in certain modes of plant operation. A future study is needed to investigate the effect that extended period of operation at these conditions will have on the SG design.

REFERENCES

NONE

LIST OF ASSUMPTIONS

11.1 The required electrical house load will be available from an external electrical source for start-up and transient conditions.

11.2 The PCS is more reliable than the HPS and will be able to operate for extended periods with the HPS shut down.

11.3 The PCHX can pass helium from the SHTS at full temperature (900°C) and 25 percent of the total flow to the mixing chamber where it joins the remaining 75 percent before it enters the SG.

11.4 There would be no real situation where the HPS would be operational and the PCS fully shut down other than possible transients.

11.5 The PCS will be able to runback to supply only the required electrical house load while the excess heat is dumped through the condenser.

APPENDICES

APPENDIX 11A NGNP OPERATIONAL MODES MATRIX

Table A-1: Modes Matrix

Mode	NHSS	RCS	RSS	CCS	HTS	PCS	Power Generated	HPS
Whole Plant in Operation	Critical	Operational	Out	Off	Operational	Operational	Yes	Operational
HPS Ready	Critical	Operational	Out	Off	Operational	Operational	Yes	Operational
NHSS and PCS Fully Operational	Critical	Operational	Out	Off	Operational	Operational	Yes	Off
NHSS and PCS Partially Operational	Critical	Operational	Out	Off	Operational	Operational	Yes	Off
Shutdown – Heat Sink through PCS	Sub-critical	Inserted	Inserted /Out[3]	Off	Operational	Operational	No	Off
Shutdown – Heat Sink through CCS	Sub-critical	Inserted	Inserted /Out	On	Off	Off	No	Off
Fuelled Maintenance	Sub-critical	Inserted	Inserted	On	Off	Off	No	Off
Defuelled Maintenance	NA	NA	Inserted	NA	Off	Off	No	Off

NA = Not Applicable in specific mode of operation

[3] The RSS is only inserted during longer term cold shutdown of the NHSS.

APPENDIX 11B FINAL DESIGN REPORT PRESENTATION TO BEA

Section 11, 12 and 13
Overall NGNP Operation, Maintainability and Availability

Jan van Ravenswaay

Preconceptual Design Report
90% Design Review

May 8-10, 2007

P B M R

Westinghouse NGNP Team

P B M R

NGNP Overall Operation Introduction

- **Overall NGNP Operation**
  - Overview of NGNP plant performance
  - NGNP Integrated control philosophy
  - Integrated plant modes of operation
- **Description of the NGNP Plant Simulator**
  - Functions and Requirements and Interfaces
- **Complexity, Risks and Future Studies**

P B M R

Overview of NGNP Plant Performance

- **NHSS Operation**
  - Power Level 500 MWt
  - Inlet/Outlet temperature 350°C/950°C
  - Inlet pressure 9 MPa
  - Maximum outlet temperature rate of change ~100°C/hour
  - NHSS inlet temperature limited to small variations (RPV material limitations)
- **HPS Operation**
  - Receives process helium at 900°C through the SHTS
  - Utilizes a maximum of 50 MWt for hydrogen production
  - At 50 MWt: Supplies the SG with 840°C process helium
  - At 0 MWt: 900°C process helium passes through PCHX to SG
- **PCS Operation**
  - Utilizes 520 MWt at 900°C in 100% electricity generating mode
  - With HPS (50 MWt) in operation
    - PCS receives helium at approximately 840°C
    - Utilizes 470 MWt for electricity generation

NGNP Integrated Control Philosophy

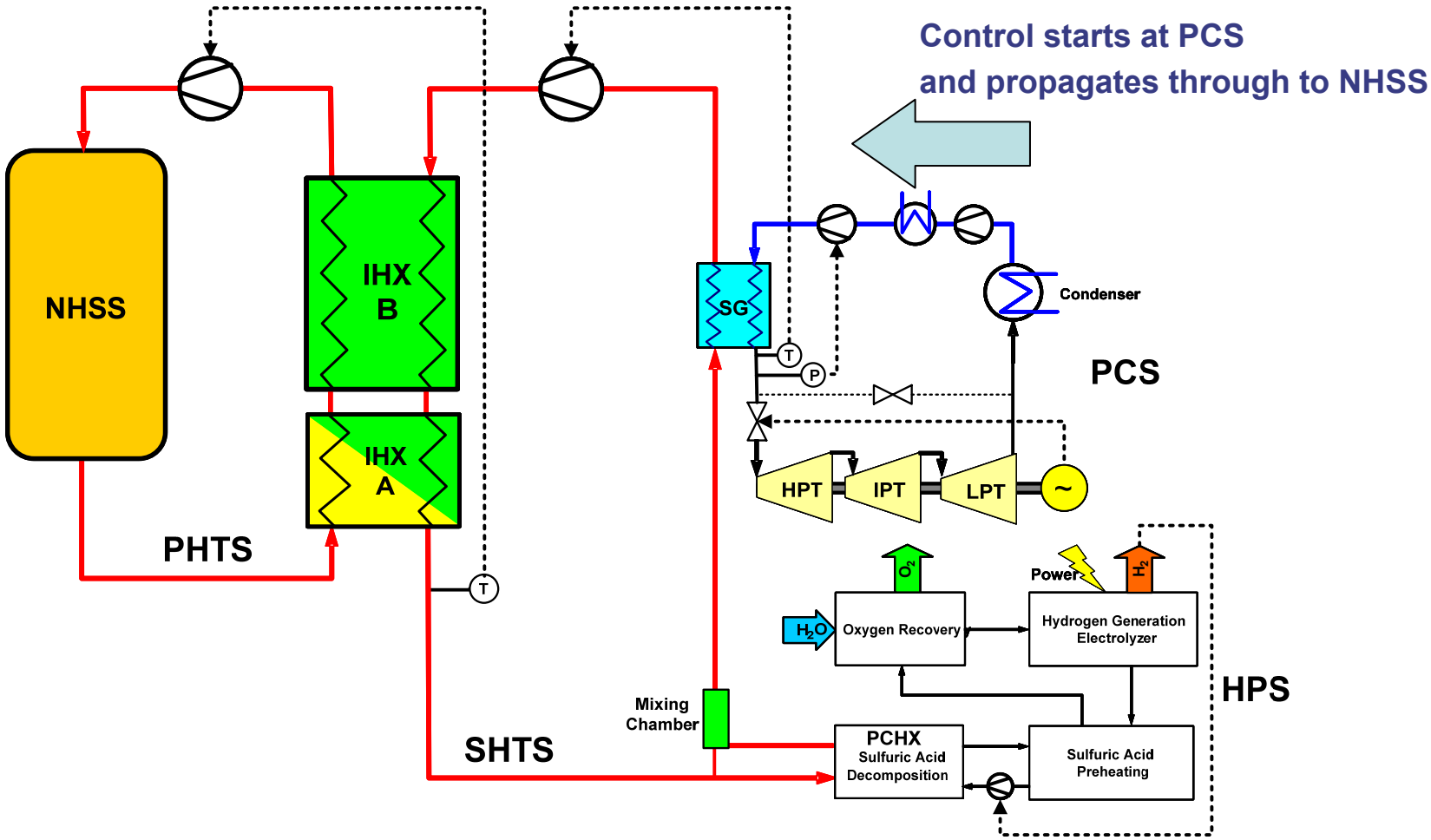

Westinghouse NGNP Team

Integrated Plant Modes of Operation

- **Plant Modes Diagram**
  - **Plant Modes**
  - **Transitions**
  - ***Transient Events***

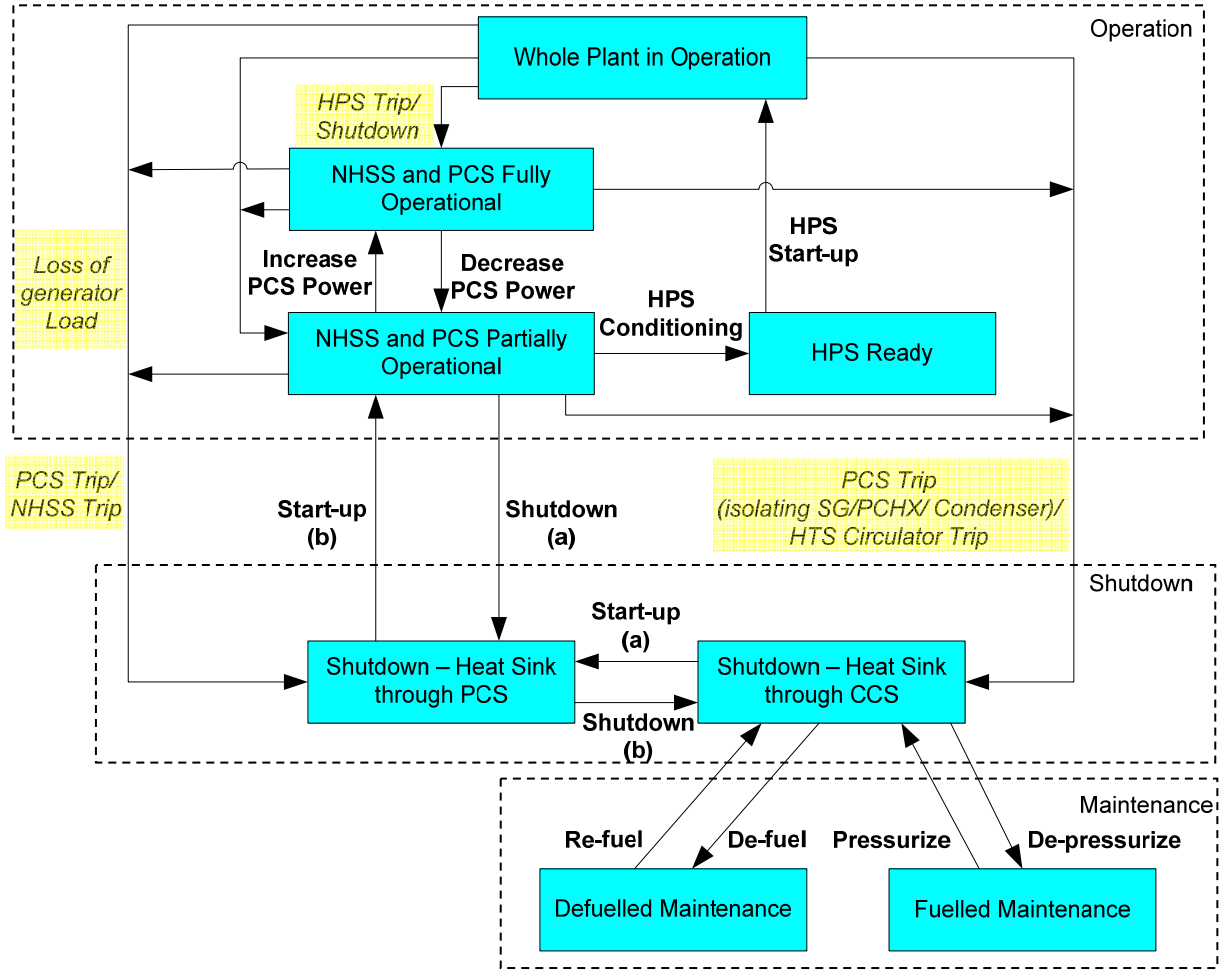

P B M R

NGNP Plant Simulator

- **Plant Simulator Functions**
  - Test designs and control philosophies before construction (Engineering simulator)
  - Train operators and test operator skills
- **Plant Simulator Requirements**
  - **Hardware**
    - Servers/work stations
    - Operator consoles with full graphic functionality
  - **Software**
    - Instructor/Engineering Station
    - Data Management
    - Information Management
- **Plant Simulator Interfaces**
  - Control Room Replica
  - Control Emulation System (for Operational Control System)
  - Engineer/Trainee Operator

P B M R

Complexity, Risks and Future Studies

- **Complexity and Risks**
  - Integrated control of different systems taking interdependencies into account
  - Transient and transitions need to be investigated to identify component design criteria
  - Return flow to NHSS flow directly against RPV – limits the allowable temperature variations
  - SG will operate at ~900°C for extended periods of time
- **Future Studies**
  - Develop integrated simulation tool (steady-state and transient)
  - Update modes diagram (identify additional modes/transitions/transients)
  - Determine the expected variations in NHSS inlet temperature
  - Simulate steady-state, transitions and transient events
  - Determine Steam Generator operating conditions

P B M R

NGNP Maintainability Introduction

- Maintenance concepts and strategy
- Maintenance levels of repair and basic principles
- Basis for outage intervals
- Requirements for components
- Special maintenance requirements and future work
- Summary and conclusions

Maintenance Concepts and Strategy

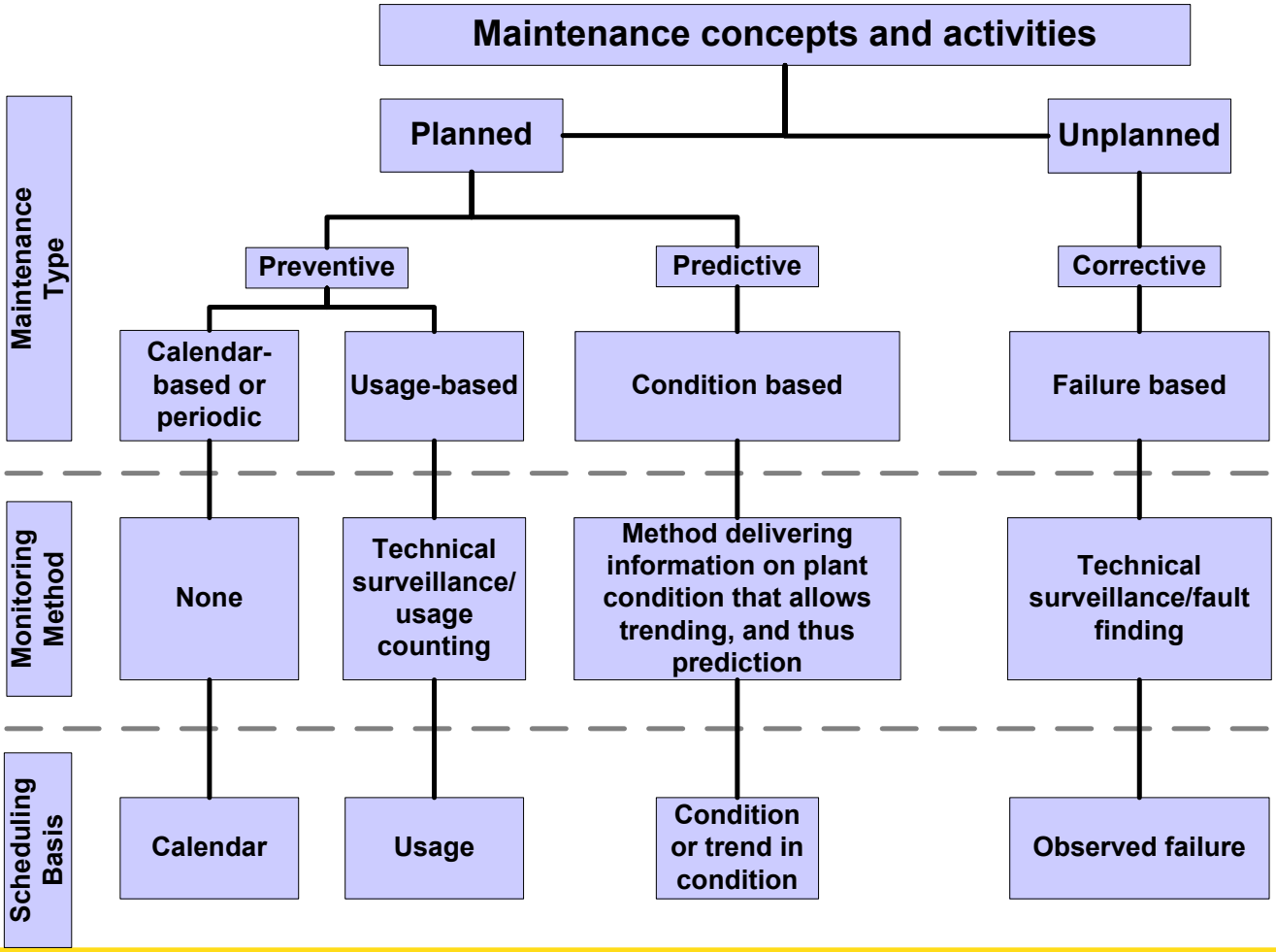

P B M R

Maintenance Levels of Repair and Basic Principles

- **Maintenance levels of repair**
  - 1st Level: Operator level,
  - 2nd Level: On-site maintenance workshop level
  - 3rd Level: Regional maintenance facility level, and
  - 4th Level: Original Equipment Manufacturer (OEM) level.

- **Basic principals**
  - Prevent release of radionuclides
  - Perform maintenance manually as far as possible
  - The duration of the 5- and 10-year outages shall not exceed the respectively specified 30 and 50 days
  - Occupational radioactive doses for personnel performing maintenance will be within regulatory limits
  - Separation of facilities for maintenance on contaminated and non-contaminated equipment

P B M R

Basis for Outage Intervals

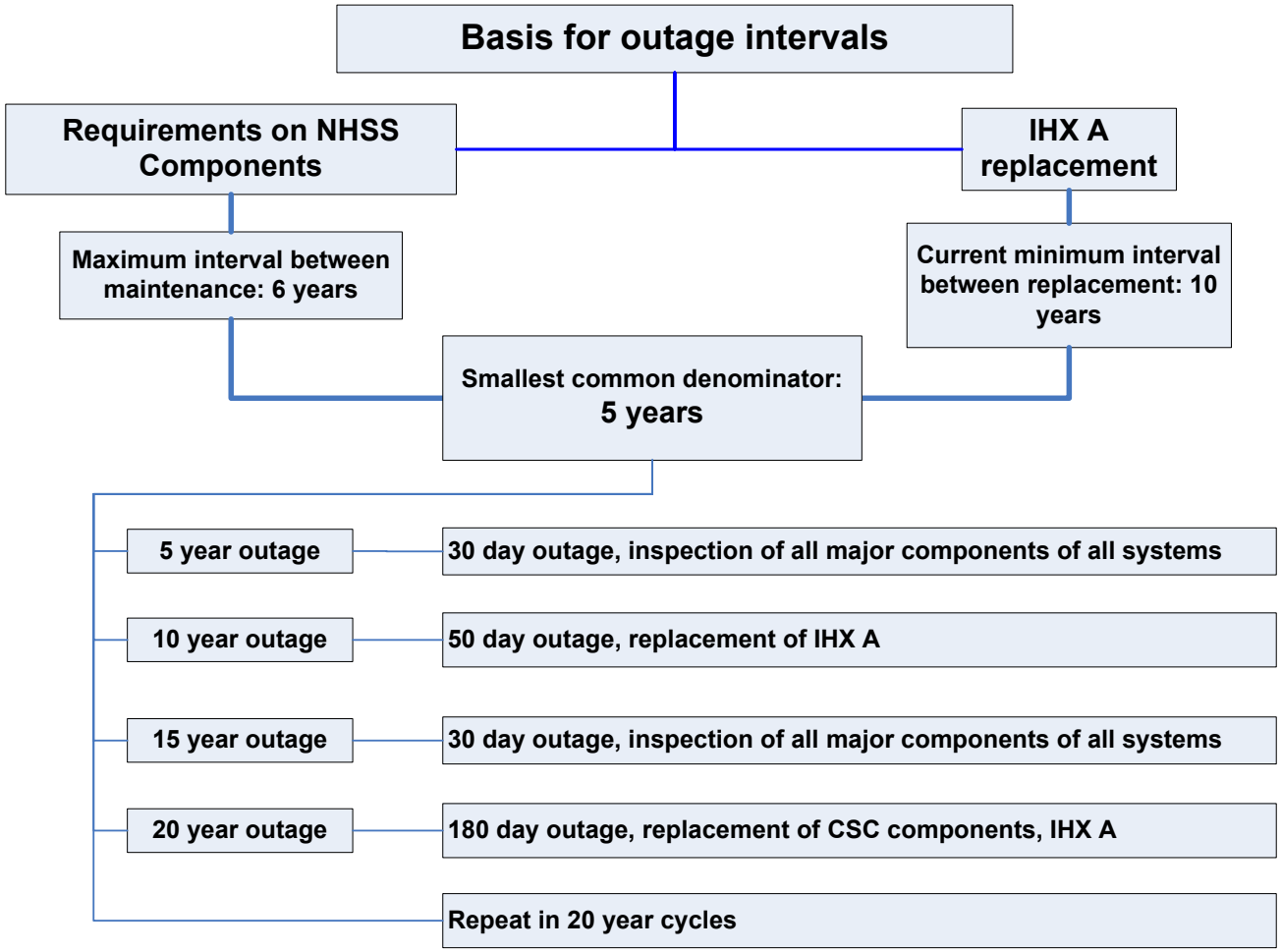

P B M R

Requirements for Components

- **Predictive rather than Corrective**: Provisions is made for monitoring equipment status, configuration, performance and for detecting and diagnosing malfunctions as a basis for predictive maintenance plans and decision making
- **Accessibility**:
  - Systems (NHSS, HPS, PCS, HTS) will allow all components to be removed and reinstalled to enable inspection, repair and replacement
  - Systems will provide access to the pressure boundary to permit in-service inspection as required by appropriate sections of the ASME B&PV Code
- **Ease of maintenance**: The plant design shall provide storage facilities for an adequate amount of spare parts as determined by a preventive maintenance and facility availability plan
- **Experience from other plants/systems:** Maintenance will be done according to international best practices, regulatory requirements and manufacturer's recommendation. Maintenance will therefore rely, as far as possible, on experience

P B M R

Special Maintenance Requirements and Future Work

- **Components with special maintenance requirements:**
  - Large valves – requires specialized casks, trolleys, bagging and removal and replacement equipment
  - Core Structure Ceramics – requires removal of Reactor Pressure Vessel head and RSS assembly. Special tools required
  - HPS components – harsh, corrosive environment. Requires special monitoring, methods and instrumentation to apply predictive maintenance. Less experience in other industries
- **Future work:**
  - Develop a maintenance plan from Failure, Modes and Effects Analysis (FMEA) on critical components
  - Instrumentation and monitoring systems for the HPS and NHSS
  - Special Tools
  - Maintenance integration study including HPS (Process Plant requirements)

P B M R

Maintainability Summary and Conclusions

- Effective maintenance is essential for the safe, sustainable operation of the NGNP.
- The NGNP must be monitored, inspected, tested, assessed and maintained to ensure that structures, systems and components function as per name plate specification.
- Preventive and Predictive maintenance must be scheduled so that optimal performance of components is maintained and corrective maintenance is minimized.
- In order to meet the *Availability* and *Capacity* factor requirements Systems, Structures and Components (SSCs) must be designed for maintainability.

P B M R

NGNP Availability Introduction

- Availability assessment
- Target contributors to loss of production capability
- Initial Availability and Capacity Factor Targets
- Summary and Conclusions

P B M R

Approach to Preconceptual Design Availability Assessment

- **Availability Performance Metrics Considered:**
  - Plant Availability Factor – fraction of time the plant is capable of producing a product
    - Electric Power and Hydrogen
    - Electric Power Only
  - Plant Capacity Factor – fraction of production level normalized to design capacity
    - Electric Power and Hydrogen
    - Electric Power Only
  - Additional metrics
    - Forced Outage Rate – fraction of planned production time in forced outage
    - Capability Loss Factor (CLF) – fraction of expected production losses
- **Combination of Approaches employed:**
  - Top-down allocation of Top Level Requirements for Performance
  - Bottom-up assessment of pre-conceptual design features
  - Appropriate interfaces with Maintainability

P B M R

Target Contributors to Loss of Production Capability

Contributions to Capability Loss Factor (CLF)	Nuclear Heat Supply System		Power Conversion System		Hydrogen Production System	
	Target	CLF	Target	CLF	Target	CLF
ISI/Shutdown maint./ Major overhaul/ Reconfigure	25 days every 5 years, 40 days every 10 years	1.78%	<40 days every 10 years	1.10%	<30 days every 10 years	0.82%
IHX/Reflector replacement	180 days every 20 years	2.47%	Not applicable	0.00%	Not applicable	0.00%
Other planned outages	Not Applicable	0.00%	<8 days per year	2.19%	<8.4 days per year	2.30%
Unplanned outages – short duration	<10 days per year	2.74%	<7 days per year	<1.92%	<10 days per year	2.74%
Unplanned outages - long duration	<10 days per 10 years	<0.27%	<10 days per 10 years	<0.27%	<10 days per 10 years	<0.27%
Excess Electrical Output	Not applicable	0.00%	See Equation (1)	-0.73%	Not applicable	0.00%
Reduced Output Operations	<2 days per year	<0.55%	<2 days per year	<0.55%	<4 days per year	<1.10%

P B M R

Initial Availability and Capacity Factor Targets

Plant Operating Mode	Overall Plant Availability Factor	Overall Plant Capacity Factor
Power Generation Only	90%	88%
Power and Hydrogen	85%	83%

P B M R

Availability Summary and Conclusions

- Initial allocation of plant availability resulted in target availability factors and target capacity factors for the PCD of the NGNP in several modes of operation.
- Due to uncertainties in the operation of the fuel handling system, future studies will be required to gain a better perspective on the performance of the core unloading system and other parts of the fuel handling system and their impact on plant availability.
- Future studies may also be required to develop a better understanding of the HPS configuration, components, and reliability and maintainability performance characteristics.

NGNP and Hydrogen Production Preconceptual Design Report

SECTION 12: MAINTAINABILITY

Revision 0

APPROVALS

Function	Printed Name and Signature	Date
Author	Andre van der Walt M-Tech Industrial	May 18, 2007
Reviewer	Jan van Ravenswaay M-Tech Industrial	May 18, 2007
Approval	Michael Correia Pebble Bed Modular Reactor (Pty) Ltd.	May 18, 2007

Westinghouse Electric Company LLC
Nuclear Power Plants
Post Office Box 355
Pittsburgh, PA 15230-0355

©2007 Westinghouse Electric Company LLC
All Rights Reserved

LIST OF CONTRIBUTORS

Name and Organization	Date
Hennie Niemand M-Tech Industrial	May 2007
Charles Bolthrunis Shaw	May 2007
Kobus van der Merwe M-Tech Industrial	May 2007
Peter Wells Shaw	May 2007

BACKGROUND INTELLECTUAL PROPERTY

Section	Title	Description
NONE		NONE

REVISION HISTORY

RECORD OF CHANGES

Revision No.	Revision Made by	Description	Date
0	Andre van der Walt M-Tech Industrial	Initial Issue	May 18, 2007

DOCUMENT TRACEABILITY

Created to support the following Document(s)	Document Number	Revision
NGNP and Hydrogen Production Preconceptual Design Report	NGNP-01-RPT-001	0

TABLE OF CONTENTS

LIST OF TABLES **12-7**

LIST OF FIGURES **12-8**

12 MAINTAINABILITY **12-9**

SUMMARY AND CONCLUSIONS **12-9**

INTRODUCTION **12-10**

12.1 OVERVIEW OF NGNP MAINTAINABILITY **12-11**

12.1.1 MAINTAINABILITY **12-11**

12.1.2 MAINTENANCE REQUIREMENTS FOR SYSTEMS AND COMPONENTS **12-12**

12.2 MAINTAINABILITY **12-13**

12.2.1 MAINTENANCE CONCEPT AND STRATEGY **12-13**

12.2.1.1 Maintenance Program Elements 12-14

12.2.1.2 Program Basis 12-14

12.2.2 PLANT MAINTENANCE CONCEPT AND LEVELS OF REPAIR **12-15**

12.2.3 PLANT OUTAGES **12-15**

12.2.3.1 After 5 years of Operation 12-16

12.2.3.2 After 10 Years of Operation 12-16

12.2.3.3 After 15 Years of Operation 12-16

12.2.3.4 After 20 Years of Operation 12-16

12.2.3.5 After 25 Years of Operation 12-17

12.2.3.6 After 30 Years of Operation 12-17

12.2.3.7 After 35 Years of Operation 12-17

12.2.3.8 After 40 Years of Operation 12-17

12.2.3.9 After 45 Years of Operation 12-17

12.2.3.10 After 50 Years of Operation 12-17

12.2.3.11 After 55 Years of Operation 12-17

12.2.4 MAINTENANCE – BASIC PRINCIPLES **12-17**

12.2.5 MAINTAINABILITY ASSESSMENT **12-18**

12.2.6 OCCUPATIONAL DOSE **12-19**

12.2.7 INSPECTABILITY AND ACCESS REQUIREMENTS **12-19**

12.3 MAINTAINANCE REQUIREMENTS FOR SYSTEMS AND COMPONENTS **12-20**

12.3.1 NUCLEAR HEAT SUPPLY SYSTEMS **12-20**

12.3.1.1 Reactor Unit System 12-20

12.3.1.1.1 Core Structures and Reactor Pressure Vessel 12-20

12.3.1.1.2 Reactivity Control System Maintenance 12-21

12.3.1.1.3 Reserve Shutdown System Maintenance 12-21

12.3.1.2 Core Conditioning System 12-21

12.3.1.3 Fuel Handling and Storage System 12-21

12.3.1.3.1 FHSS Valve Replacement 12-22

12.3.1.3.2 Core Unloading Device 12-22

12.3.1.3.3 Helium Circulator System (transportation gas) 12-22
12.3.1.3.4 Gas Evacuation System (vacuum system) 12-22
12.3.1.3.5 Cyclone Filter 12-23
12.3.1.4 Reactor Cavity Cooling System 12-23
12.3.1.5 Primary Loop Initial Clean-up System 12-23
12.3.1.6 Nuclear Heat Supply Systems Cooling Water System 12-23
12.3.1.7 Helium Services System 12-23
12.3.1.7.1 Helium Make-up System 12-24
12.3.1.7.2 Helium Purification System 12-24
12.3.1.7.3 Inventory Control System 12-24
12.3.1.8 Radioactive Waste Handling System 12-24
12.3.1.9 Decontamination System 12-24
12.3.1.10 Remainder of the Reactor System 12-24

12.3.2 HEAT TRANSPORT SYSTEMS 12-25
12.3.2.1 Circulators 12-25
12.3.2.2 Valves 12-25
12.3.2.3 Intermediate Heat Exchangers 12-25
12.3.2.4 Pressure Piping 12-26
12.3.2.5 External Insulation 12-26
12.3.2.6 Pressure Relief System 12-26
12.3.2.7 Pressure Boundary Support System 12-26

12.3.3 HYDROGEN PRODUCTION SYSTEMS 12-26
12.3.3.1 General Maintenance Considerations 12-27
12.3.3.2 Feed and Utility Supply System 12-27
12.3.3.2.1 HPS Feedwater Purification System 12-27
12.3.3.2.2 Make-up Acid Supply 12-27
12.3.3.2.3 Make-up Caustic Supply 12-27
12.3.3.3 Sulfuric Acid Decomposition System 12-28
12.3.3.3.1 Sulfuric Acid Decomposition Reactor (PCHX) 12-28
12.3.3.3.2 Process Coupling Heat Exchanger Vessel 12-28
12.3.3.3.3 Sulfuric Acid Concentrator 12-28
12.3.3.3.4 Sulfuric Acid Recuperator 12-28
12.3.3.3.5 Pressure Relief System 12-28
12.3.3.3.6 Decomposition Product Cooler 12-29
12.3.3.3.7 Acid Recycle Pump 12-29
12.3.3.3.8 Oxygen Offgas Compressor 12-29
12.3.3.3.9 Sulfuric Acid Storage 12-29
12.3.3.4 Electrolysis System 12-29
12.3.3.4.1 Electrolyzer 12-29
12.3.3.4.2 Electrolyzer Feed Pumps 12-30
12.3.3.4.3 Absorbers 12-30
12.3.3.4.4 Catholyte and Anolyte Circulation Pumps 12-30
12.3.3.4.5 Catholyte Coolers 12-30
12.3.3.5 Product Purification System 12-30
12.3.3.5.1 Hydrogen Purification System 12-30
12.3.3.5.2 Oxygen Purification System 12-31
12.3.3.6 HPS Waste Treatment and Disposal System 12-31
12.3.3.7 Remainder of Hydrogen Plant 12-31

12.3.3.7.1 Pressure Relief System....12-31

12.3.4 POWER CONVERSION SYSTEMS....12-32

12.3.4.1 Turbine Generator System....12-32

12.3.4.1.1 Air-cooled Condenser System....12-32

12.3.4.2 Main Steam System....12-33

12.3.4.2.1 Steam Generator....12-33

12.3.4.2.2 Auxiliary Steam System....12-33

12.3.4.3 Feedwater and Condensate System....12-33

12.3.4.4 PCS Control and Instrumentation System....12-33

12.3.4.5 Remainder of PCS System....12-33

12.3.5 BALANCE OF PLANT SYSTEMS....12-34

12.3.6 BUILDINGS AND STRUCTURES....12-35

12.4 DESIGN DEVELOPMENT NEEDS....12-36

12.5 COMPLEXITY, RISK AND FUTURE STUDIES....12-37

12.5.1 COMPLEXITIES AND RISKS....12-37

12.5.2 FUTURE STUDIES....12-37

12.5.2.1 Special tools....12-37

12.5.2.2 Instrumentation....12-37

12.5.2.3 Maintenance program....12-38

12.5.2.4 Replacement of the Core Structures Ceramic (CSC)....12-38

REFERENCES....12-39

LIST OF ASSUMPTIONS....12-40

APPENDICES....12-41

APPENDIX 12A DEFINITIONS....12-41

APPENDIX 12B FINAL DESIGN REVIEW PRESENTATION TO BEA....12-42

LIST OF TABLES

Table 12.2-1: Relationship of Maintenance Concepts and Activities..... 12-13

LIST OF FIGURES

NONE

12 MAINTAINABILITY

SUMMARY AND CONCLUSIONS

The major systems of the Next Generation Nuclear Plant (NGNP) which dominate the maintainability are identified, and time intervals of 5 years are proposed between maintenance outages. This interval is mainly influenced by the anticipated replacement of the Intermediate Heat Exchanger A (IHX) after 10 years. The possibility of longer time intervals between maintenance and inspection could be considered if the IHX A can be replaced at intervals longer than 10 years.

The basic maintenance requirements for the major components are described to give the anticipated level of inspection required. Future studies are listed to address outstanding issues.

INTRODUCTION

Effective maintenance is essential for the safe, sustainable operation of the NGNP. The NGNP must be monitored, inspected, tested, assessed and maintained to ensure that structures, systems and components function as per name plate specification. Preventive and predictive maintenance must be scheduled so that optimal performance of components is maintained and corrective maintenance is minimized. The planning and execution of preventive, predictive and corrective maintenance must be done such that outage time is minimized and the capacity factor and availability requirements as specified in Section 3 are met.

In order to meet the availability and capacity factor requirements Systems, Structures and Components (SSCs) must be designed for maintainability. Aiding the design for maintainability with respect to the SSCs of the NGNP, this section provides the anticipated maintainability concept and strategy for the NGNP. The maintenance principles, inspectability approach and access requirements are described.

Anticipated maintenance requirements are described along with the maintenance approach for systems and subsystems to ensure trouble free operation and radiation dose to personnel that does not exceed regulatory and statutory limits.

All the Acronyms used in this section are defined in PCDR Appendix A.

12.1 OVERVIEW OF NGNP MAINTAINABILITY

This section presents an overview of the preconceptual NGNP maintainability concepts and strategy, levels of repair, plant outage intervals, basic maintenance principals, maintainability assessment, occupational dose, inspectability and access requirements and maintenance requirements for systems and components.

12.1.1 Maintainability

Maintenance is divided between planned and unplanned maintenance. Preventive maintenance will occur at regular planned outages. The design of SSC's will include provisions for monitoring equipment status, configuration, and performance and for detecting and diagnosing malfunctions as a basis for predictive maintenance plans and decision making. When the performance or condition of an SSC does not allow it to function as per specification, corrective action must be taken.

Four levels of repair can be distinguished on the NGNP: operator level, on-site maintenance workshop level, regional maintenance facility level and original equipment manufacturer level.

Plant outages are scheduled at 5-year intervals. The minimum lifetime of IHX A of 10 years and the requirement of maximum 6-year intervals between maintenance and inspection on other SSC's are the main constraints in deciding on intervals between scheduled outages. Scheduled outages will last maximum 30 days for outages scheduled after 5 years and 15 years. The 10 year outage requires the replacement of the IHX A and will last a maximum of 50 days. The 20 year outage requires the replacement of ceramic core structures and will last a maximum of 180 days. The scheduled maintenance outages are repeated in 20 year cycles.

Basic maintenance principles include minimum ingress of air into the core; prohibit the release of contaminated dust-bearing helium into the building environment and use of manual labor for maintenance as far as possible.

The NGNP is designed with ease of maintenance in mind. Maintenance work on contaminated and non-contaminated equipment will be performed separately. Proper tools, equipment and consumable supplies will be available to support maintenance work. Decontamination will be done manually as far as possible. The maintenance program will be designed to yield as low as reasonably possible (ALARA) radiation dose accumulation.

Systems on the NGNP shall be designed to allow all components to be removed and reinstalled to enable inspection, repair and replacement possible.

12.1.2 Maintenance Requirements for Systems and Components

The maintenance requirements of the main components and systems of the Nuclear Heat Supply System (NHSS), Heat Transport System (HTS), the Hydrogen Production System (HPS) and the Power Conversion System (PCS) are given in the preceding section. General requirements for each system include that the design provides access to the pressure boundaries to permit in-service inspection as required by appropriate sections of the ASME B&PV Code, and to allow all components to be removed and reinstalled to make inspection, repair and replacement possible.

12.2 MAINTAINABILITY

12.2.1 Maintenance Concept and Strategy

Effective maintenance is essential for the safe, sustainable operation of the NGNP. The NGNP must be monitored, inspected, tested, assessed and maintained to ensure that SSCs function as per specification. The design of the major NGNP systems, namely the NHSS), HPS and the PCS will include provisions for monitoring equipment status, configuration, and performance and for detecting and diagnosing malfunctions as a basis for predictive maintenance plans and decision making.

Table 12.2-1 illustrates the relationship between the maintenance concepts and the associated maintenance activities that would provide the basis of a good maintenance strategy. This strategy would be supported by the maintenance programme.

Table 12.2-1: Relationship of Maintenance Concepts and Activities

Maintenance type			Monitoring method	Scheduling based on
Planned	preventive	calendar-based or periodic	none	calendar
		usage-based	technical surveillance / usage counting	usage
	predictive	condition based	method delivering information on plant condition that allows trending, and thus prediction	condition and trend in condition
Unplanned	corrective	failure based	technical surveillance / fault finding	observed failure

The majority of maintenance activities are traditionally allocated to the concept of predictive or preventive maintenance. These maintenance activities can be derived, for example, from design or reliability requirements, codes and standards, feedback from on-line monitoring and operating experience. These activities are performed on the basis of time, actual condition and/or predicted condition. When the performance or condition of an SSC does not allow it to function as per specification, corrective action must be taken.

The results of all maintenance activities are fed back via a workflow analysis process which continually optimize and improves the maintenance program.

12.2.1.1 Maintenance Program Elements

In order to ensure that the overall maintenance strategy is effective, the maintenance programme must comprise of mutually supporting elements. These elements cover programme basis, maintenance organization, maintenance activities, system health monitoring, maintenance work, spare parts and procurement, supply support, management asset and programme review, training, Packaging, Handling, Storage and Transportation (PHS&T) and record keeping. Each programme element will require sufficient resources governed by the NGNP's approved strategy, policies, processes and procedures.

12.2.1.2 Program Basis

A systematic approach shall be followed to identify which maintenance activities are to be performed, on which SSC's, and at what interval. The identification, selection and frequency of maintenance activities, as a minimum, shall at least take the following into account:

1. The relative SCC importance of the public health and safety, worker health and safety, and the environment.
2. Radiation protection.
3. The technical basis for demonstrating that safety goals and performance criteria are met as required in the license and supporting documentation.
4. The requirements of all applicable industry codes and standards.
5. Design and operating conditions.
6. Vendor recommendations.
7. Operating Experience.
8. Economical impact due to maintenance shut-downs and possible cost of maintenance equipment.

Since the purpose of the maintenance program is to ensure that SSCs can function as per specification, it follows that a maintenance strategy must have its basis in the original plant design. Strategy development, therefore, requires a close liaison between the operating and design organizations to ensure that the strategy is based on a clear understanding of design philosophy and plant details.

The results of maintenance assessments shall be used to provide feedback for program changes or design modifications. Program changes and design modifications must be controlled in accordance with the licensee's approved procedures and the maintenance program updated accordingly.

12.2.2 Plant Maintenance Concept and Levels of Repair

A four-level maintenance concept is established for the NGNP. The levels of support are defined as follows:

- 1st Level: operator level,
- 2nd Level: on-site maintenance workshop level
- 3rd Level: regional maintenance facility level, and
- 4th Level: Original Equipment Manufacturer (OEM) level.

For the NGNP, limited maintenance infrastructure is available. Maintenance on first-of-a-kind SSCs is done in close cooperation with the OEM.

It is a design requirement on the plant that the repair work that can be performed inside the module is limited. The activities are limited to replacement of Line-replaceable Units (LRU), which can then be either repaired or discarded outside the module in a suitable facility.

A significant amount of inspection and test equipment are required because of the testing and operation of a first-of-a-kind design. Standardized maintenance will be implemented wherever possible.

Maintenance activities for the NGNP will include monitoring, inspecting, testing, calibrating and parts replacing. The type of maintenance activity and frequency applied to SSCs shall be commensurate with importance to safety, design function and required performance.

12.2.3 Plant Outages

The NGNP is being designed for ease of maintenance. The planned outages are based on the maintenance plan for the current PBMR reactor systems. The higher power level of the NGNP could require more regular maintenance and inspections. A further restriction is the planned replacement of IHX A after ten year intervals. Based on this, the time-interval which best suites both the replacement of the IHX A at ten year intervals and general planned maintenance and inspection is five years. If the material chosen for the IHX A can be tested and proven so that IHX A is replaceable after 12 years instead of 10 years then the intervals can be lengthened to 6 years. However, longer maintenance outages on the NGNP could be required after a number of operating years, since the maintenance plan assumes a new plant after each maintenance outage, which is not in practice the case.

The duration and scope of these planned outages are as follows:

12.2.3.1 After 5 years of Operation

A 30-day outage takes place, with the following major activities:

- Inspection of all major NHSS components such as valves, pipes and subsystem components.
- Primary Heat Transport System (PHTS) components such as valves, circulators, the IHX etc. ,
- Secondary Heat Transport System (SHTS) components such as valves, pipes, circulators etc.,
- PCS and HPS components.
- Inspection and maintenance on the PHTS and SHTS blowers inside the Pressure Boundary (PB).
- Inspection and maintenance on the Reactivity Control System (RCS) and Reserve Shutdown System (RSS).
- Damaged components and materials will be replaced.

12.2.3.2 After 10 Years of Operation

A 50-day outage takes place, during which the same activities as for the 5th-year outage are performed. Replacement of IHX A takes place and inspection of IHX B in the Primary Heat PHTS to verify the condition of the equipment. Inspection on the SHTS circulator, the Steam Generator (SG) of the PCS and the Process Coupling Heat Exchanger (PCHX) will also be performed.

12.2.3.3 After 15 Years of Operation

A 30-day outage takes place, repeating the activities of the 5th-year outage.

12.2.3.4 After 20 Years of Operation

CSC (Core Structure Ceramics) Centre Reflector, CSC Inner Side Reflector and the CSC Bottom reflector Defuel Cone Blocks replacement take place. This process will take approximately 180 days. Further maintenance is as for the 10th-year outage. Note that the CSC reflectors mentioned above might need replacement after 15 years due to the higher neutron fluence required to obtain 500 MWt power. This will be verified in future studies.

12.2.3.5 After 25 Years of Operation

As for the 5th-year outage.

12.2.3.6 After 30 Years of Operation

The activities of a 10th-year outage are repeated during this period.

12.2.3.7 After 35 Years of Operation

As for the 5th-year outage.

12.2.3.8 After 40 Years of Operation

CSC reflector replacement (as mentioned above) takes place. This process will take approximately 180 days. Further maintenance is as for the 10th-year outage. Note that the core reflector might need replacement after 30 years due to the higher fluence required to obtain 500 MWt power. This will be verified in future studies.

12.2.3.9 After 45 Years of Operation

As for the 5th-year outage.

12.2.3.10 After 50 Years of Operation

As for the 10th-year outage.

12.2.3.11 After 55 Years of Operation

As for the 5th-year outage.

12.2.4 Maintenance – Basic Principles

The following basic principles were used when the maintenance concepts were developed:

- The maintenance concepts should limit air ingress into the NHSS as far as possible, especially at high temperature. Air in the PHTS requires clean-up and has the potential to cause corrosion of graphite structures if the temperatures are above 300 °C. The Primary Loop Initial Clean-up System therefore plays a very important role in removing moisture and air in the PHTS before the temperature in the system is raised. The limited air that could possibly enter the PHTS should also be dust-free. Valves must be included in the design to isolate work areas during maintenance.
- When the reactor system is breached for maintenance, the pressure inside the reactor will be slightly below local atmospheric pressure. When breaching, helium injections shall be considered to prevent air ingress, and the reactor shall never be exposed directly to the atmosphere in fuelled maintenance mode.
- Prohibit the release of contaminated dust-bearing helium into the building environment. When opening the Nuclear Heat Supply Building (NHSB) above the PHTS, the laydown area becomes a controlled area.
- The duration of the 5- and 10-year outages shall not exceed the respectively specified 30 and 50 days.
- Maintenance will be performed manually as far as possible with due consideration given to radiation. This will minimize the potential high complexity and cost of remotely operated tools or robotics.
- Direct line of sight or remote visual aids are used for positioning tools, removing components and realigning components during re-installation.

12.2.5 Maintainability Assessment

The NGNP is being designed for ease of maintenance. Maintenance facilities will be sized and arranged to promote the safe and efficient completion of work in a clean and orderly manner. Maintenance for work on contaminated and non-contaminated equipment will be separated.

Radioactive refurbished equipment will be segregated and stored in separate storage facilities in a manner to separate contaminated and non-contaminated equipment whereby cross contamination is prohibited and radiation dose is minimized. Proper tools, equipment and consumable supplies will be available to support maintenance work.

Adequate decontamination facilities for tools, parts and equipment will be available and used to minimize radiation doses and exposure to contamination. Manual decontamination of tools will be done as far as possible, however remote controlled tools will be used, as appropriate, to minimize radiation exposures.

A detailed qualitative assessment of the possible radioactive contamination of the primary circuit components and the effects on maintenance will be conducted in the basic design phase. This will aid in the operational planning, development of special tools, and further improve the requirements of the decontamination and waste systems.

12.2.6 Occupational Dose

The maintenance program that will be developed for the NGNP will ensure that the occupational radioactive doses for personnel performing maintenance are within regulatory limits, and shall be continuously assessed to be designed to yield ALARA radiation dose accumulation.

12.2.7 Inspectability and Access Requirements

During the operational life of the NGNP the various systems should be periodically examined and monitored for possible deterioration, in order to judge whether they are acceptable for continued safe operation of the plant or whether remedial measures are necessary. The frequency and extent of the in-service-inspections should be routinely reviewed as a result of experience feedback.

These inspections would also be done according to regulatory requirements. Such regulatory requirements are not yet specified and depend on the reactor design and licensing. Where regulatory requirements do not cover certain aspects of inspectability and access, appropriate national or international body standards will be used.

It is therefore a priority to include inspectability and access to critical systems in the design and layout of the NGNP systems and components.

12.3 MAINTAINANCE REQUIREMENTS FOR SYSTEMS AND COMPONENTS

12.3.1 Nuclear Heat Supply Systems

This subsection defines the maintenance operations which must be done on the Nuclear Heat Supply System. Anticipated maintenance on typical subsystems is described. The NHSS design will provide access to the primary and secondary loop pressure boundary to permit in-service inspection as required by appropriate sections of the ASME B&PV Code (refer to Section 3).

12.3.1.1 Reactor Unit System

The reactor unit systems will have periodical inspection and maintenance which will mostly be done with special tools according to the manufacturer's specifications. The following sections briefly describe some of the major maintenance items for the reactor unit. A more detailed maintenance program will be created in the conceptual design phase (Refer to Section 3 Appendix A for the definition of conceptual design phase).

12.3.1.1.1 Core Structures and Reactor Pressure Vessel

The reactor core structure and Reactor Pressure Vessel (RPV) are designed not to require any maintenance or access during normal operation. Maintenance that will occur in 20 year intervals (possibly 15 year intervals, as mentioned in 12.2.3.4) when the side and central reflectors are replaced.

Replacement of the reflectors will require special tools as the initial core structure installation and commissioning process is in a 'clean' (non-nuclear) environment, and personnel access is not a significant limitation. The core structure assembly tools will then later undergo further development for use in a radiological contaminated environment to perform the core structure refit. The initial installation activities would help to evaluate and validate the replacement concept. A system will be conceptualized to be able to perform a core structure refit during the reflector replacement outage. This entails dismantling the top end of the reactor (such as removing the RSS assemblies), and removing the centre column. The transport and storage of the core structure's used graphite blocks are accommodated within the site infrastructure.

12.3.1.1.2 Reactivity Control System Maintenance

The maintenance on all the RCS components inside the RU, including the motor drives (Control Rod Drive Mechanism (CRDM)) is done with the reactor slightly below local atmospheric pressure. This will ensure that radioactive contaminants do not leak into the reactor cavity and building. All special tools are designed to allow minimum air ingress into the reactor.

The maintenance on the Control Rod System is done after the reactor has been completely shut down, the pressure of the helium has been lowered to slightly under atmospheric pressure, and the reactor is cooled to a temperature of < 350ºC maximum fuel temperature. The CCS (Core Conditioning System) is then started to maintain acceptable core temperatures. Due to shutdown considerations, only one control rod can be maintained at a time on a fuelled reactor.

12.3.1.1.3 Reserve Shutdown System Maintenance

The maintenance on all the RSS components inside the RU, including the holding magnet and position indicator coil is done with the reactor at slightly below local atmospheric pressure.

The maintenance on the RSS is done during fuelled maintenance with the reactor closed, i.e. the reactor is still fuelled and the CCS is used to cool the core. The pressure of the helium inside the PHTS is lowered to slightly under atmospheric pressure, and the reactor is cooled and maintained at a maximum fuel temperature of < 350º C by the CCS.

12.3.1.2 Core Conditioning System

The blowers, valves and heat exchangers of the CCS will be inspected periodically according to the manufacturer's recommendations and predictive or preventative maintenance will be applied. Special tools maybe required to do the maintenance and will be designed along with the reactor unit.

12.3.1.3 Fuel Handling and Storage System

The FHSS is subdivided into nine subsystems (Section 4). Many components are common between these subsystems, and the tasks are not considered to be different, except that the working conditions vary between these subsystems. The generic maintenance tasks per type of component are described below. The FHSS can be isolated from the reactor and all tasks can be performed under reactor full power, except for the Core Unloading Device (CUD), since the CUD is used during operation to circulate fuel.

12.3.1.3.1 FHSS Valve Replacement

Types of valves include double seat isolation valves, gas shut-off valves, flow restrictors, counters, indexers and diverters. Valves will not be flanges to prevent helium leaks. Valves will therefore be cut from the pipe for removal and new valves be welded to pipes for replacement. The valves all consist of three elements, of which only the configuration of the active part varies. The shaft penetration and the valve drives are identical in all cases. A valve is removed using a specially designed valve removal tool that is mounted on a modular maintenance platform specifically designed for the task.

12.3.1.3.2 Core Unloading Device

Scrap Fuel Removal

Note: The maintenance philosophy on this task needs to be confirmed during the conceptual design phase before agreement is reached about the maintenance requirements. Undersize and damaged fuel is stored in the scrap collection can of the CUD. This is emptied as soon as the fuel spheres have reached the collection cans and places them in a scrap fuel container. The scrap fuel spheres are removed with a tool similar in layout and working to the tool developed for the Thorium High-Temperature Reactor (THTR). (Refer to Section 4 and Section 5 for more information on the CUD). The broken and damaged spheres are moved to the damaged fuel sphere storage.

Drive Mechanism

Replacement of the drive mechanism, the shaft penetration and the complete CUD is possible and uses a tool which is similar in design to the Thorium High Temperature Reactor's (THTR) Special Tools.

12.3.1.3.3 Helium Circulator System (transportation gas)

During maintenance, the circulator is pulled into a canister and transported to the maintenance facility. As far as preventive maintenance on the circulator is concerned, the circulator is running on Electromagnetic Bearings (EMBs), and very little preventive maintenance is anticipated.

12.3.1.3.4 Gas Evacuation System (vacuum system)

The vacuum pump is replaced upon failure.

12.3.1.3.5 Cyclone Filter

Servicing consists of tasks such as the removal of the dust cartridge, when it is full. Provision must be made for this task.

Many of the special tools for the FHSS are based on those developed for the THTR and from lessons learned from the THTR. The High Level Waste (HLW) storage facility in the bottom of the module stores the scrap or damaged fuel as extracted by the CUDs. The special tools include scrap fuel collection, transfer and transport machines.

12.3.1.4 Reactor Cavity Cooling System

The RCCS is designed for life of the plant, thus no scheduled maintenance other than In-Service-Inspection (ISI) is envisaged. Provision is made in the design for 'as required' inspection and repair of the RCCS. Special tools will be developed up to the point of having a basic design in place, so that should a repair become necessary, the required equipment can be procured at short notice. As far as possible, 'off-the-shelf' equipment is used.

12.3.1.5 Primary Loop Initial Clean-up System

The Primary Loop Initial Clean-up System (PLICS) is situated outside the module, and is not initially exposed to contaminated graphite dust. Thus no special tools are envisaged for this system after initial use to condition the system. The possibility of contamination of the PLICS heating elements occur during later use, is high, and special tools will be developed in advance for this need. The possibility of using some of the existing gas system's special tools for the PLICS maintenance is being studied.

The heaters, vacuum system and nitrogen source will be periodically inspected and maintained according to the manufacturer's recommendations.

12.3.1.6 Nuclear Heat Supply Systems Cooling Water System

Pumps, heat exchangers and valves will be periodically inspected and maintained according to the manufacturer's recommendations.

12.3.1.7 Helium Services System

The Inventory Control System (ICS) is divided into three subsystems:

12.3.1.7.1 Helium Make-up System

The Helium Make-up System (HMS) will be isolated from the NHSS during maintenance. Typically maintenance tasks for the HMS are:

i. Replacement of empty bottles. There are no radiation risks for this task.
ii. Replacement and servicing of the compressor. There is limited radiation risk for this task.

12.3.1.7.2 Helium Purification System

The Helium Purification System is isolated from the PHTS during any maintenance activity on the Helium Purification System. After the maintenance has been completed, the system is flushed with helium.

12.3.1.7.3 Inventory Control System

As with the Helium Purification System, the Inventory Control System (ICS) can be isolated from the PHTS and SHTS for maintenance purposes. After the maintenance is completed, the system is flushed with helium.

Special Tools (ST) and Equipment Handling Systems (EHSs) are provided for the removal and replacement of the filters, circulators and valves of the Helium Inventory Control System (HICS).

12.3.1.8 Radioactive Waste Handling System

The systems that handle the gaseous, liquid and solid waste will be periodically inspected maintained as per operational requirements.

12.3.1.9 Decontamination System

The systems that are used in the vacuum cleaning processes, dry ice cleaning processes, and wet blasting chemical decontamination will be periodically maintained as per operational requirements. A HOT service facility will also be available for maintenance as required.

12.3.1.10 Remainder of the Reactor System

The following systems form the remainder of the reactor system and will be maintained according to the manufacturer's recommendations:

- Nuclear Heat Supply Systems Building HVAC Systems

- Nuclear System Monitoring and Control Systems
- Nuclear System Electrical Systems
- Nuclear Instrumentation System
- Reactor Protection System
- Equipment Protection Circuit
- Operational Control System

12.3.2 Heat Transport Systems

This subsection defines the anticipated maintenance operations which will be done on the HTS. The PHTS and SHTS have almost the same equipment as discussed in Section 6 and will therefore be discussed as one. The specific maintenance will be defined in the conceptual design phase.

12.3.2.1 Circulators

The circulators (motor, coupling, fan, bearings) will be periodically inspected and predictively maintained according to the manufacturer's recommendations. This could include monitoring of vibration trends to identify possible problems in advance so that predictive maintenance can be performed.

12.3.2.2 Valves

All the valves will be inspected and tested periodically to determine if maintenance is required and if the settings are correct. Valve overhauls could also be scheduled and replacement parts will be kept on site. PHTS check valves will be inspected to assure that the valves perform as required when needed.

Large valves will require specialized casks, trolleys, bagging and removal and replacement equipment.

12.3.2.3 Intermediate Heat Exchangers

No frequent maintenance or inspections should be required but monitoring of the heat exchangers will provide early warnings for maintenance to be done or seals to be changed. IHX B is expected to last the entire NGNP lifetime, while IHX A will be replaced every 10 years. Monitoring could include measurement of the pressure drop, vibration or noise measurement, measurement of the temperatures and calculation of the effectiveness.

12.3.2.4 Pressure Piping

The pressure piping will be maintained according to appropriate codes and standards.

12.3.2.5 External Insulation

Minimal maintenance should be required for the insulation and periodic inspections should be sufficient.

12.3.2.6 Pressure Relief System

All the valves will be inspected and tested periodically to determine if maintenance is required and if the settings are correct. In-service tests will be performed where possible, with removal of the valves and bench testing where in-service testing is not possible. Valve overhauls could also be scheduled and replacement parts will be kept on site.

12.3.2.7 Pressure Boundary Support System

The support system will require minimal maintenance but will be periodically inspected.

12.3.3 Hydrogen Production Systems

The HPS can be subdivided into seven general systems. Many components are common between these subsystems, and the maintenance tasks may be similar, except that the working conditions vary between these subsystems. The generic maintenance tasks and approach per type of component are described. Note that this type of system has not been operated on an industrial scale and that specific component maintenance requirement will follow from research done to develop the system. Basic high-level requirements for maintenance on the HPS are the following:

- The HPS shall be designed to allow all components to be removed and reinstalled to enable inspection, repair and replacement (Refer to Section 3).
- The plant design shall provide storage facilities for an adequate amount of spare parts as determined by a preventive maintenance and facility availability plan (Refer to Section 3).
- The HPS design shall provide access to the pressure boundary to permit in-service inspection as required by appropriate sections of the ASME B&PV Code (Refer to Section 3).

12.3.3.1 General Maintenance Considerations

In the HPS the main substances are water and acids. These are very corrosive substances which are at some stages of the process at high temperatures and high pressures, making it even a harsher environment for equipment and instrumentation.

A continuous preventive maintenance program will be designed based on the manufacturer's recommendations, and then as time progresses and working knowledge of the system is obtained, the maintenance program would continuously be refined to optimize the preventive maintenance frequency and content.

The HPS will also require a supply of inert gas to purge equipment before maintenance to ensure all the hydrogen is removed. Equipment will also be flushed and washed with water before performing maintenance.

12.3.3.2 Feed and Utility Supply System

12.3.3.2.1 HPS Feedwater Purification System

The valves, pumps and other equipment used in the feedwater system will be maintained according to the manufacturer's recommendation to ensure uninterrupted supply to the HPS. Spares and replacement parts will be kept in stock for critical equipment.

12.3.3.2.2 Make-up Acid Supply

The valves, pumps, containers, pipes and other equipment used in the make-up acid supply system will be maintained according to the manufacturer's recommendation to ensure uninterrupted supply to the HPS. Spares and replacement parts will be kept in stock for critical equipment.

12.3.3.2.3 Make-up Caustic Supply

The valves, pumps, containers and other equipment used in the make-up caustic supply system will be maintained according to the manufacturer's recommendation to ensure uninterrupted supply to the hydrogen production system. Spares and replacement parts will be kept in stock for critical equipment.

12.3.3.3 Sulfuric Acid Decomposition System

12.3.3.3.1 Sulfuric Acid Decomposition Reactor (PCHX)

The decomposer will be maintained according to the manufacturer's recommendations. Due to the high operating temperatures and pressures special maintenance will be needed for the silicon carbide tubes as well as special seals to prevent any sulfuric acid leakage in the helium. Very frequent monitoring of the linings, insulations and seals will help schedule preventive maintenance.

12.3.3.3.2 Process Coupling Heat Exchanger Vessel

Maintenance on the PCHX vessel will be done according to the manufacturer's recommendation.

12.3.3.3.3 Sulfuric Acid Concentrator

Preheating, concentrating and vaporizing the 50 percent sulfuric acid that comes from the electrolyzers at about 90°C presents currently a severe materials engineering challenge. The concentrator will typically be lined with Teflon or a similar lining or coating to limit corrosion. These lining or coatings must be carefully monitored, periodical inspected and predictive maintenance must be implemented to limit leakages and corrosion, as recommended by manufacturers.

12.3.3.3.4 Sulfuric Acid Recuperator

Maintenance on the sulfuric acid recuperator will be done according to the manufacturer's recommendation.

12.3.3.3.5 Pressure Relief System

All the valves, especially valves where flashing could be present will be in a very corrosive environment and periodical maintenance is suggested along with the manufacturer's recommendations. Adequate spares would also be needed and must be kept on site to replace or service valves.

12.3.3.3.6 Decomposition Product Cooler

The cooler will be frequently monitored and maintained according to manufacturer's recommendation. Linings or coatings will be carefully monitored and periodical maintenance performed to limit leakages and corrosion.

12.3.3.3.7 Acid Recycle Pump

The acid recycle pump will require monitoring for leakages and very frequent maintenance is anticipated, especially during early stages of operation. A replacement pump and spares will be kept onsite.

12.3.3.3.8 Oxygen Offgas Compressor

The oxygen compressor will operate at high pressure and will require continuous monitoring to identify periodic maintenance. Overhaul and inspections will be scheduled according to the manufacturer's recommendations.

12.3.3.3.9 Sulfuric Acid Storage

The acid storages facilities will be periodically inspected and predictively maintained according to manufacturer's recommendation. Linings or coatings will be carefully monitored and periodical maintenance performed to limit leakages and corrosion. Daily inspections will be done to detect any leakages or corrosion.

12.3.3.4 Electrolysis System

12.3.3.4.1 Electrolyzer

There will be 27 electrolyzer units with tanks/vessels which will use some sort of membrane to separate the hydrogen and sulfuric acid. Currently the membrane will be a delicate proton exchange membrane which will easily be folded with ions. Frequent maintenance will be required on the membranes to ensure optimized performance of the hydrogen plant. A dedicated, full time maintenance crew will be appointed to look after the electrolyzers and especially the membranes.

It is suggested in Section 7 that the electrolysers are periodically removed and serviced and that every month one electrolyzer is pulled for maintenance. All the electrolyzers are thus serviced in a two year cycle. Only one electrolyser will be overhauled at a time to have as small as possible effect on the efficiency of the HPS. There is easy access to the electrolysers and it

would be safe to do maintenance on them after they have been purged with inert gas and washed with water.

The electrolyzer and vessels linings are also important and must be periodically monitored and maintained to prevent leakages and corrosion.

12.3.3.4.2 Electrolyzer Feed Pumps

The feed pumps will be periodically inspected and predictively maintained according to the manufacturer's recommendations and will probably also be overhauled along with the electrolyser that it is supplying. Replacement pumps and spares could be kept onsite.

12.3.3.4.3 Absorbers

The absorbers will be periodically inspected and predictively maintained according to manufacturer's recommendation. Linings or coatings will be carefully monitored and periodical maintenance performed to limit leakages and corrosion.

12.3.3.4.4 Catholyte and Anolyte Circulation Pumps

The circulation pumps will be periodically inspected and predictively maintained according to the manufacturer's recommendations. Replacement pumps and spares could be kept onsite.

12.3.3.4.5 Catholyte Coolers

The catholyte coolers will be periodically inspected and predictively maintained according to the manufacturer's recommendations. Replacement pumps and spares could be kept onsite.

12.3.3.5 Product Purification System

12.3.3.5.1 Hydrogen Purification System

Frequent maintenance according to the manufacturer's recommendations will be done on the hydrogen product purification system. The system will also be monitored on-line and regularly inspected to detect any leakage or corrosion. Linings or coatings will be carefully monitored and periodical maintained.

12.3.3.5.2 Oxygen Purification System

The oxygen purification system will be subjected to maintenance according to the manufacturer's recommendations. The system will also be monitored on-line and regularly inspected to detect any leakage or corrosion. Linings or coatings will also be carefully monitored and periodical maintained.

12.3.3.6 HPS Waste Treatment and Disposal System

The valves, pumps and other equipment used in the waste treatment system will be maintained according to the manufacturer's recommendation to ensure uninterrupted supply to the hydrogen production system. Spares and replacement parts will be kept in stock for critical equipment.

Due to the high natural radioactivity of the ground water the waste stream will be very carefully monitored to limit any radiation and to safely dispose of. The maintenance procedures will take this possible radioactive build up into account and will be designed accordingly.

12.3.3.7 Remainder of Hydrogen Plant

The remainder of the hydrogen plant is listed below and will be maintained according to the manufacturer recommendations, international standards and regulatory requirements. Special maintenance activities and procedures will be designed for the instrumentation which is crucial for the safe and effective operation of the hydrogen production unit.

12.3.3.7.1 Pressure Relief System

Pressure relief systems are common to both the Sulfuric Acid Decomposition System and the Electrolysis System. All the valves, especially valves where flashing could be present will be in a very corrosive environment and periodical maintenance is suggested along with the manufacturer's recommendations and Occupational Safety and Health Act (OSHA) requirements. Adequate spares would also be needed and must be kept on site to replace or service valves.

12.3.4 Power Conversion Systems

This subsection defines the anticipated maintenance operations which will be done on the PCS as discussed in Section 8. All the maintenance will be done according to international standards and regulatory requirements which will be defined in the conceptual design phase.

The following general requirements pertain to the PCS:

- The PCS shall be designed to allow all components to be removed and reinstalled to make possible inspection, repair and replacement (Refer to Section 3).
- The PCS design shall provide access to permit in-service inspection as required by appropriate sections of the ASME B&PV Code (Refer to Section 3).

12.3.4.1 Turbine Generator System

Steam turbines are rugged units, with operational life often exceeding 50 years. Operation and maintenance is done according to supplier recommendations, and would typically include the following:

- Making that the steam flowing through the turbine is always clean.
- The oil lubrication system must be clean and at the correct operating temperature and level to maintain proper performance.
- Other items include inspecting auxiliaries such as lubricating-oil pumps, coolers and oil strainers and checking safety devices such as the operation of overspeed trips.
- In order to obtain reliable service, steam turbines require long warm-up periods so that there is minimal thermal expansion stresses and wear concerns.

The Generator will be periodically inspected with scheduled outages to inspect and maintain the bearings, rotor, stator and auxiliaries systems. All the maintenance will be done according to international standards and the manufacturer's recommendations.

12.3.4.1.1 Air-cooled Condenser System

Air cooled condensing units require a minimum of maintenance. The limited maintenance required includes periodically cleaning of the coil and finned surfaces are necessary along with maintenance as specified by manufacturer.

12.3.4.2 Main Steam System

12.3.4.2.1 Steam Generator

The steam generator will be maintained by the manufacturer's recommendations with scheduled maintenance outages for inspections, especially inspection of the tubes. Tube plugging will be considered for tubes that are out of service with the required inspection of plugged tubes taking place at inspections.

12.3.4.2.2 Auxiliary Steam System

The auxiliary steam system maintenance will be done according to the manufacturer's recommendations and best practices

12.3.4.3 Feedwater and Condensate System

The pumps, heat exchangers, motor and valves will be periodically maintained according to the manufacturer's recommendations.

12.3.4.4 PCS Control and Instrumentation System

The control and instrumentation system will be maintained according to industry best practices, international standards, manufacturer's recommendations and regulatory requirements.

12.3.4.5 Remainder of PCS System

The remainder of the PCS includes the PCS electrical distribution system, the PCS water supply and treatment system, the PCS Component Cooling Water System and the Turbine Building HVAC system. These systems will be maintained according to the manufacturer recommendations, international codes and regulatory requirements.

12.3.5 Balance of Plant Systems

The following systems are the balance of plant system of the NGNP and will be maintained according to international standards, manufacturer's recommendations and regulatory requirements, where applicable. These maintenance activities will be defined in the conceptual design phase.

- Plant Control and Instrumentation Systems
- Plant Electrical Distribution System
- Compressed Air System
- Equipment Handling System
- Decontamination System
- Waste Handling Systems
- Wastewater Treatment System
- Fire Protection System
- Environmental Monitoring Systems
- Sanitary Sewer System
- Commissioning Spares
- Auxiliary Boiler
- Laboratories
- Storm Water System
- Gas Storage and Supply System

12.3.6 Buildings and Structures

The following systems are the buildings and structures of the NGNP and will be maintained according to international standards, manufacturer's recommendations and regulatory requirements, where applicable. These maintenance activities will be defined in the conceptual design phase.

- Control Building
- Ancillary Building
- Services Building
- Cooling Water Plant Building
- Water/Waste Water Treatment Building
- Sewage Treatment Building
- Administration Building
- Security Building
- Warehouse
- Other Buildings

12.4 DESIGN DEVELOPMENT NEEDS

There are no DDN's specifically linked to the Maintainability. DDN's appointed to the individual sections will address issues with respect to critical components. Issues such as access, infrastructure for maintenance systems, shielding, etc. need to be addressed in a "design for maintainability" specification or requirement.

12.5 COMPLEXITY, RISK AND FUTURE STUDIES

12.5.1 Complexities and Risks

Since the maintenance schedules, operational planning, development of special tools and other activities associated with maintainability (disposal, storage etc.) are highly dependent on the replacement of components that are/ not yet developed and tested such as IHX A and the PCHX, a maintenance plan can not be finalized until further Failure Modes and Effects Analysis (FMEA) on specific components have taken place to point out maintenance requirements. The requirements for maintenance and scheduled shut-down will also influence the Availability of the NGNP.

12.5.2 Future Studies

Currently the following future studies are envisioned.

12.5.2.1 Special tools

The special tools will be identified according to the location of the SSC within the plant, or equipment type, or a combination of these. This provides optimal use between various support requirements and strategies.

The special tools that are currently anticipated will be mainly used for inspection and maintenance of the reactor unit and primary heat transport system.

The special tools that are required to access the reactor include bolting equipment, seal welding equipment, lip seal cutting equipment, shielding, casks, and enclosures. Access is required primarily for the core reflector replacement. Inspection and replacement requirements are being developed, and concepts are developed as the requirements become clearer.

12.5.2.2 Instrumentation

Due to the harsh environments that are present in the NGNP, in particular in the reactor unit and hydrogen production system, future work will be required on the instrumentation and monitoring of these systems, as well as further work on instrumentation required for health monitoring.

12.5.2.3 Maintenance program

A detailed maintenance program need to be developed that especially addresses and aligns the maintenance activities between the different systems, how maintenance and shutdown activities will influence each other and how to optimize plant downtime.

12.5.2.4 Replacement of the Core Structures Ceramic (CSC)

The requirement of 500 MWt power will inevitably lead higher neutron fluence in the ceramic core structures. The lifetime of the graphite structures in the core, especially the central reflector, needs to be investigated for the high fluences encountered in the NGNP.

The accessibility of the ceramic core structures also need to be addressed, as the removal of the RPV head is a complicated undertaking.

REFERENCES

NONE

LIST OF ASSUMPTIONS

NONE

APPENDICES

APPENDIX 12A DEFINITIONS

maintenance

The organized activities, both administrative and technical, to keep structures, systems and components in good operating condition, and to ensure that they function as per design.

periodic inspection

Mandatory inspection of components carried out at intervals following the start-up of a Nuclear Power Plant as governed by international standards and manufacturer's recommendations.

predictive maintenance

Planned maintenance activities initiated by observed conditions, diagnosis or trends of SSCs performance or function.

in-service inspection

A periodic non-destructive examination of nuclear power plant SSCs in order to provide information about their current condition and damage, defect or degradation that might occur.

preventive maintenance

An equipment maintenance strategy based on replacing, overhauling or remanufacturing an item at a fixed interval, regardless of its condition at the time. It is used to detect incipient failures and to assure the continuing capability of the plant to perform its intended functions. Preventive maintenance includes periodic, predictive and planned maintenance activities performed prior to failure of an SSC.

APPENDIX 12B FINAL DESIGN REVIEW PRESENTATION TO BEA

See Section 11, Appendix 11B.

NGNP and Hydrogen Production Preconceptual Design Report

SECTION 13: AVAILABILITY

Revision 0

APPROVALS

Function	Printed Name and Signature	Date
Author	Grant Tinsley Technology Insights	May 15, 2007
Reviewer	Karl Fleming Technology Insights	May 15, 2007
Approval	Fred Silady Technology Insights	May 15, 2007

Westinghouse Electric Company LLC
Nuclear Power Plants
Post Office Box 355
Pittsburgh, PA 15230-0355

©2007 Westinghouse Electric Company LLC
All Rights Reserved

LIST OF CONTRIBUTORS

Name and Organization	Date
Grant Tinsley Technology Insights	May 2007
Fred Silady Technology Insights	May 2007
Dan Allen Technology Insights	May 2007

BACKGROUND INTELLECTUAL PROPERTY

Section	Title	Description
NONE		NONE

REVISION HISTORY

RECORD OF CHANGES

Revision No.	Revision Made by	Description	Date
0	Grant Tinsley Technology Insights	Initial Issue	May 15, 2007

DOCUMENT TRACEABILITY

Created to support the following Document(s)	Document Number	Revision
NGNP and Hydrogen Production Preconceptual Design Report	NGNP-01-RPT-001	0

TABLE OF CONTENTS

LIST OF TABLES **13-6**

LIST OF FIGURES **13-7**

13 AVAILABILITY **13-8**

SUMMARY AND CONCLUSIONS **13-8**

INTRODUCTION **13-9**

13.1 DEFINITION OF AVAILABILITY PERFORMANCE METRICS FOR PBMR NGNP **13-10**

13.1.1 DEFINITION OF NGNP PLANT OPERATING STATES **13-10**

13.1.2 DEFINITION OF PLANT AVAILABILITY METRICS **13-10**

13.1.3 DEFINITION OF PLANT CAPACITY METRICS **13-11**

13.1.4 DEFINITION OF PLANT CAPABILITY METRICS **13-12**

13.1.5 OTHER AVAILABILITY AND RELIABILITY METRICS **13-13**

13.2 AVAILABILITY ASSESSMENT OF PBMR NGNP **13-14**

13.2.1 NUCLEAR HEAT SUPPLY FACILITY **13-17**

13.2.1.1 Design Characterization Assumptions 13-17
13.2.1.2 Planned Outage Considerations 13-18
13.2.1.3 Availability Model for Reactor and Heat Transport Systems 13-18
13.2.1.4 Reliability Data for Reactor and Heat Transport Systems 13-18

13.2.2 HYDROGEN PRODUCTION FACILITY **13-19**

13.2.2.1 Design Characterization Assumptions 13-19
13.2.2.2 Planned Outage Considerations 13-19
13.2.2.3 Availability Model for Hydrogen Production System 13-19
13.2.2.4 Reliability Data for Hydrogen Production System 13-20

13.2.3 POWER CONVERSION FACILITY **13-20**

13.2.3.1 Design Characterization Assumptions 13-20
13.2.3.2 Planned Outage Considerations 13-20
13.2.3.3 Availability Model for Power Conversion System 13-21
13.2.3.4 Reliability Data for Power Conversion System 13-21

13.2.4 NGNP BALANCE OF PLANT SYSTEMS **13-21**

13.2.4.1 Design Characterization Assumptions 13-21
13.2.4.2 Planned Outage Considerations 13-22
13.2.4.3 Availability Model for BOP Systems 13-22
13.2.4.4 Reliability Data for BOP Systems 13-22

13.2.5 OVERALL AVAILABILITY ASSESSMENT FOR THE PBMR NGNP **13-22**

13.2.5.1 Summary of Availability Targets 13-22

13.3 COMPLEXITY, RISKS, AND FUTURE STUDIES **13-26**

13.3.1 COMPLEXITY AND RISKS **13-26**

13.3.2 FUTURE STUDIES 13-26

REFERENCES 13-27

LIST OF ASSUMPTIONS 13-28

APPENDICES 13-30

APPENDIX 13A FORMULAS USED IN AVAILABILITY AND CAPACITY FACTOR ALLOCATIONS 13-30

APPENDIX 13B NGNP RELIABILITY DATA 13-34

APPENDIX 13C FINAL DESIGN REVIEW PRESENTATION TO BEA 13-39

LIST OF TABLES

Table 13.2-1: Example Form for Availability Scenario Impact Vectors 13-16
Table 13.2-2: Preliminary Capacity Factor Targets for PBMR NGNP 13-24
Table 13.2-3: Allocation of Capacity Loss Targets for NHSS 13-25
Table 13.2-4: Allocation of Capacity Loss Targets for HPS 13-25
Table 13.2-5: Allocation of Capacity Loss Targets for PCS and BOP 13-25

LIST OF FIGURES

Figure 13.2-1: Requirements Flow Down to Design 13-15
Figure 13.2-2: Representation of Power Transient Scenario with Equivalent Two-State Model 13-16
Figure 13.2-3: Representation of Plant Shutdown Scenario by Equivalent Two-State Model 13-17

13 AVAILABILITY

SUMMARY AND CONCLUSIONS

The assessment and allocation of plant availability requirements for the preconceptual design of the Next Generation Nuclear Plant (NGNP) is documented in this section. The structure of this section corresponds to the work breakdown structure of this aspect of the pre-conceptual design scope of work. It is envisioned that the contents of this section will be further evolved and expanded into a stand-alone plant reliability and availability assessment report during the conceptual design phase.

This initial allocation of plant availability resulted in target availability factors and target capacity factors for the preconceptual design of the NGNP in several modes of operation. For the plant operating mode with both Power Conversion System (PCS) and Hydrogen Production System (HPS) in operation (electric power and hydrogen being produced), the target availability factor is 82.6%. For this operating mode, the target capacity factor is 81.0%. If the planned outages for the Nuclear Heat Supply System (NHSS), PCS, and HPS can be fully coordinated the availability and capacity factors for producing both electric power and hydrogen increase to 84.8% and 82.8%, respectively. For the plant operating mode with only PCS operation (electric power being produced, but no hydrogen) the target availability factor is 87.9%. For this operating mode, the target capacity factor is 87.3%. If the planned outages for the NHSS and PCS can be fully coordinated, the availability and capacity factors for producing electric power only increase to 89.5% and 88.4%, respectively.

INTRODUCTION

The purpose of this section of the report is to document the assessment and allocation of the plant reliability, availability, and capacity factor performance of the NGNP from the point of view of the preconceptual design. The scope of these assessments includes both planned and forced outages and production curtailments and the impact of these outages and curtailments on the expected availability and capacity factor performance. The contents of this report section cover the definitions of the availability performance metrics used in the evaluation, as well as the availability assessments and allocations for the Nuclear Heat Supply System (NHSS), Power Conversion System (PCS), Hydrogen Production System (HPS), and the overall NGNP plant.

Traditional definitions of availability and capacity factor metrics are for single-use energy production machines such as electric generation facilities. In Section 13.1, the approach for defining the availability performance metrics for a dual purpose, co-product plant such as the NGNP (electricity generation and hydrogen production) is described. For example, planned and forced outages may impact electricity generation only, hydrogen production only, or both, depending on the cause of the outage and the capability of the plant to support various operating states. In addition, during the initial operations at NGNP, the plant will be used as a demonstration plant with many special tests and inspections that would not be done for a commercial plant. Hence the availability assessment and allocation during the demonstration plant phase will be different than during the commercial operation phase. The target availability and capacity factors for the multi-module commercial plant are 95%.

Section 13.2.1 covers the availability and capacity factor assessment of the NHSS. This includes the reactor unit system, the Primary Heat Transport System (PHTS), the Secondary Heat Transport System (SHTS), and their respective support systems. The List of Assumptions provides the assumptions made concerning the design of the plant and concerning the impact of planned outages. Section 13.2.2 provides a similar assessment of availability and capacity factors related to the HPS.

The availability and capacity factor assessment for the PCS and the associated support systems is documented in Section 13.2.3. The expected performance associated with planned maintenance outages (e.g., turbine overhauls), forced outages of the PCS and the capability to "shadow" some of these outages with other systems maintenance are addressed in this section. Section 13.2.4 documents the availability assessment and capacity factor impacts for the Balance of Plant (BOP) systems.

In Section 13.2.5, the availability and capacity factor assessment for the overall NGNP Preconceptual Design is presented. This overall assessment incorporates the metrics defined in Section 13.1 and includes a set of technical issues that must be addressed in order for the goals for plant availability and capacity factor to be met. .

All acronyms are defined in PCDR Appendix A.

13.1 DEFINITION OF AVAILABILITY PERFORMANCE METRICS FOR PBMR NGNP

Standard metrics such as plant reliability, availability, capacity factor, capability factor, forced outage rate, unplanned capability performance factor, etc. are defined in this section. The challenge in defining and interpreting these metrics for a dual use machine such as the NGNP is discussed.

13.1.1 Definition of NGNP Plant Operating States

The purpose of this section is to define the plant operating states that are assumed to be possible for the NGNP and that need to be taken into account for defining the appropriate availability metrics. For example, it is assumed that the HPS cannot operate with the PCS unavailable. It is assumed that the PCS is able to operate with the HPS unavailable as long as the NHSS is available and that, under these conditions, the PCS will operate at an increased power level. It is assumed that maintenance is not possible on the process coupling heat exchanger when the HPS is not in operation but the PCS is in operation. However, maintenance may be possible on some of the other HPS components during these conditions. The possibilities for the different plant states will help define the appropriate performance metrics. See the List of Assumptions for a description of all the assumptions related to plant design, plant operation, and equipment maintenance.

Unique to the NGNP are plant states related to its demonstration, such as “shut down for reconfiguring of the plant”. These types of outages will impact the availability factor and capacity factor for the plant, but will not impact the capability factor, since these outages are planned.

13.1.2 Definition of Plant Availability Metrics

The purpose of this section is to develop the performance metrics associated with the plant availability, i.e. the fraction of time the plant is available to produce its products in each of its relevant operating states. Three availability metrics are defined, one for heat energy production, one for electric power production and one for hydrogen production, as described below.

Availability - NHSS: The expected fraction of time, during a calendar year, that the reactor and Primary Heat Transport System (PHTS) are capable of supplying heat energy to the Secondary Heat Transport System (SHTS), usually expressed as a percentage. For a plant such as NGNP, this is equivalent to the fraction of time the Primary Heat Transport System (PHTS) is in operation.

Availability - Electric: The expected fraction of time, during a calendar year, that the plant is capable of producing net power output, usually expressed as a percentage. For a plant such as NGNP, this is equivalent to the fraction of time the plant is actually producing net electrical power output, i.e., the time with the generator connected to the grid with power output exceeding house load.

Availability - Hydrogen: The expected fraction of time, during a calendar year, that the plant is capable of producing net hydrogen output, usually expressed as a percentage. For a plant such as NGNP, this is equivalent to the fraction of time the plant is actually producing net hydrogen output.

13.1.3 Definition of Plant Capacity Metrics

The purpose of this section is to develop the performance metrics associated with the plant capacity, i.e. the fraction of the energy production and hydrogen production the plant produces in relation to what it is capable of producing at full power conditions. Three capacity metrics are defined, one for heat generation, one for electric power production and one for hydrogen production, as described below.

Capacity Factor - NHSS: The expected fraction of the net heat energy production that the reactor produces over a period of time such as a calendar year normalized to the heat energy produced from continuous operation at full power, usually expressed as a percentage. Hence, a 100% capacity factor corresponds to 365 Effective Full Power (EFP) days of heat energy production in a non-leap year.

Capacity Factor - Electric: The expected fraction of the net electrical energy production that the plant produces over a period of time such as a calendar year normalized to the energy produced from continuous operation at full power, usually expressed as a percentage. Hence a 100% capacity factor corresponds to 365 Effective Full Power (EFP) days of energy production in a non-leap year.

Capacity Factor - Hydrogen: The expected fraction of the net hydrogen production that the plant produces over a period of time such as a calendar year normalized to the hydrogen production from continuous operation at full production capacity, usually expressed as a percentage. Hence a 100% capacity factor corresponds to 365 Effective Full Hydrogen Production (EFHP) days of hydrogen production in a non-leap year.

The capacity factor is normally numerically less than the availability factor for two reasons; one is the possibility for power reduction transients that reduce electrical generation and hence the capacity factor, but do not take the generator off-line so that the availability is not adversely impacted. The second is that even when the generator is taken off-line the power transient associated with a normal shutdown, if applicable, and a plant startup impacts the

capacity factor for the whole period of power operation below 100% but only impacts the availability factor when the generator is off-line.

Capacity Loss Factor: The fraction of heat production, energy production or hydrogen production not realized due to planned or unplanned power reductions and shutdowns, as compared to that for 100% operation for a specific period of time, usually expressed as a percentage. The capacity loss factor is sometimes broken down into contributions from planned and unplanned losses in capacity.

The economic performance of a base-loaded plant especially in a deregulated environment is best measured in terms of the capacity factor. Ideally for a base-loaded plant the capacity factor would be expected to approach the availability factor, although extended periods of operation at less than 100% full power will lead to a separation of these metrics.

13.1.4 Definition of Plant Capability Metrics

The purpose of this section is to develop the performance metrics associated with the plant capability, i.e., the fraction of the energy production and hydrogen production the plant produces in relation to what it is expected to produce according to the planned performance cycles. Three capability metrics are defined, one for heat energy production, one for electric power production and one for hydrogen production, as described below.

Capability Factor - NHSS: The expected fraction of the net heat energy production that the plant produces over a period of time such as a calendar year normalized to the planned heat energy production over that time frame. Hence, a plant that is planned to be operating at full power 90% of the time and shutdown the remaining time, and in fact operates at 100% power for exactly 90% of the time and 0% for the remaining time would have a 100% capability factor and a 90% capacity factor over that time period.

Capability Factor - Electric: The expected fraction of the net electrical energy production that the plant produces over a period of time such as a calendar year normalized to the planned energy production over that time frame.

Capability Factor - Hydrogen: The expected fraction of the net hydrogen production that the plant produces over a period of time such as a calendar year normalized to the planned hydrogen production over that time frame.

Capability Loss Factor: The fraction of heat production, energy production or hydrogen production not realized due to planned or unplanned power reductions and shutdowns, as compared to the planned production for a specific period of time, usually expressed as a percentage. The capability loss factor is sometimes broken down into contributions from planned and unplanned losses in capacity.

13.1.5 Other Availability and Reliability Metrics

This section provides definitions for other commonly used availability and reliability measures.

Reliability: The probability that the plant will operate and produce rated power or rated hydrogen production over the entire mission time, typically over the refueling cycle.

Plant trip frequency: The frequency of unexpected plant trips, usually expressed as the number of events per calendar year or per operating year. The plant trip can be an event or event sequence that leads first to a reactor trip and a consequential power conversion system trip, hydrogen production system trip, or some other event.

Forced outage rate: The forced outage rate is not really a rate but is defined as the fraction of time spent in forced outages in relation to the time planned for power generation. If a plant ran continuously, even at reduced power, between planned major outages its forced outage rate would be zero. If the forced outage rate were 10% for a plant that expects to operate continuously between major outages that occur every 6 years and last for one month, that means of that 98.6% of the time that the plant is not in the major outage, it was down in forced outages 10% of the time, or on the average 9.86% of each calendar year.

The reliability measure is seldom used, however, nuclear power plants utilize the plant trip frequency as a performance metric as such events impose relatively severe transient loads on components within the duty cycle and they also represent initiating events that are of interest in the safety performance of the plant. In addition, for currently licensed Light Water Reactors (LWRs) any plant trip will generate an evaluation of safety significance under the Nuclear Regulatory Commission (NRC) Risk-Informed Oversight Process (ROP).

13.2 AVAILABILITY ASSESSMENT OF PBMR NGNP

The overall plant availability assessment is organized into contributions from the four major parts of the NGNP including the following.

- Nuclear Heat Supply System (NHSS)
  - Reactor and Reactor Systems
  - Heat Transport Systems (HTS)
    - Primary Heat Transport System
    - Secondary Heat Transport System
    - Heat Transport Support Systems

- Hydrogen Production System (HPS)
  - Major Hydrogen Plant Components and Subsystems
  - Hydrogen Plant Support Systems

- Power Conversion System (PCS)
  - Major Power Conversion System Components and Subsystems
  - PCS Support Systems

- Balance of Plant (BOP) Systems (Systems supporting two or more of the NHSS, PCS, and HPS)

The technical approach to modeling the plant reliability performance and for predicting the expected plant availability, capacity and capability metrics is described in this section. This approach builds on the plant reliability performance model using a set of scenarios, similar to those developed in a Probabilistic Risk Assessment (PRA). Figure 13.2-1 below is similar to an event tree in a Probabilistic Risk Assessment (PRA) where each path through the event tree culminates in an end state (some end states may be identical). A down branch in the event tree represents the failure or unavailability of the function above the branch. For example, end state ES-2 is the result of the failure or unavailability of the HPS, given that the nuclear heat supply system and the power conversion system are operating. End state ES-X appears at the end of two of the paths through the event tree and represents the condition where neither the electrical production nor the hydrogen production is in operation.

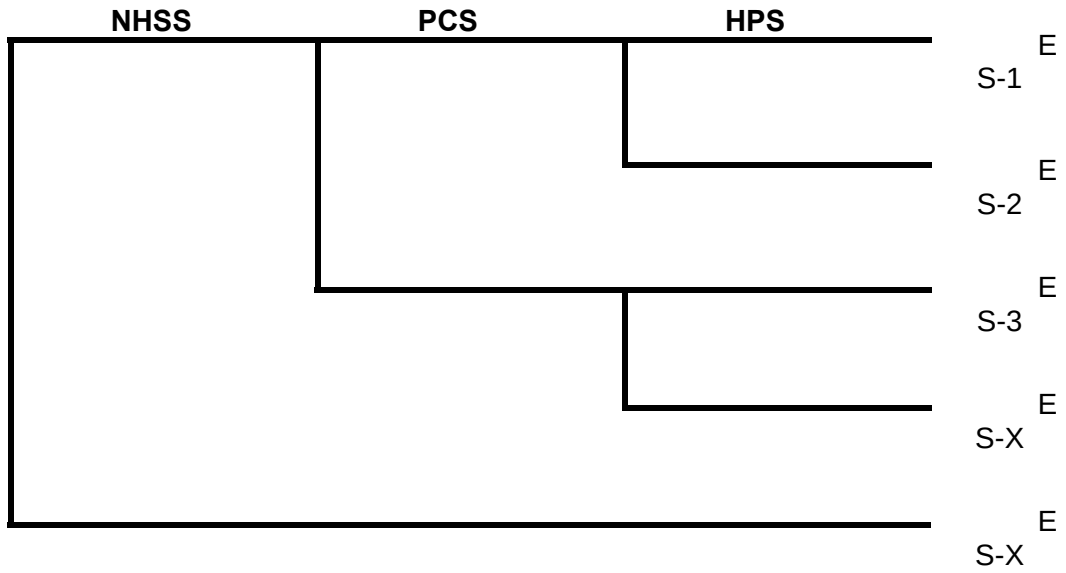

Figure 13.2-1: Requirements Flow Down to Design

Each end state can result from a number of combinations of equipment unavailabilities. Each combination of equipment unavailabilities can be thought of as a scenario leading to the respective end state. Each scenario is comprised of an initiating event, and a vector of plant impacts that include the downtime, and extent of production loss of the NHSS, PCS, and HPS. The extent of production loss is measured in the effective full power production hours that are lost during the scenario which begins when plant performance is perturbed and ends when the plant returns to full power production status. The contributions from each scenario are then combined to provide an integrated assessment of plant performance. This approach has been found to be useful in modeling important dependencies that occur in real life scenarios that have adverse impacts on performance.

Table 13.2-1 is an example, illustrating how the impact vectors can be defined for each scenario based on the down time and amount of production loss for electrical power production and the down time and amount of production loss for hydrogen production. Once the scenarios have been defined in the availability model, the impact vectors for each scenario are defined by filling in Table 13.2-1. This allows for a unique impact vector to be defined, if necessary, for each combination of equipment unavailabilities leading to a plant outage or derating event. Each end state of Figure 13.2-1 may be comprised of many unique scenarios, each scenario possibly having a unique impact vector.

Table 13.2-1: Example Form for Availability Scenario Impact Vectors

Scenario	Electrical Production Down Time	Electrical Production Loss	Hydrogen Production Down Time	Hydrogen Production Loss
S1				
S2				
S3				
↓				
Sn				

The amount of production loss for any event that reduces capacity or results in a plant shutdown can be represented by an equivalent full power (or full production) outage duration, as shown in Figure 13.2-2 and Figure 13.2-3. This approach simplifies the definition of impact vectors for events like those shown in the figures below.

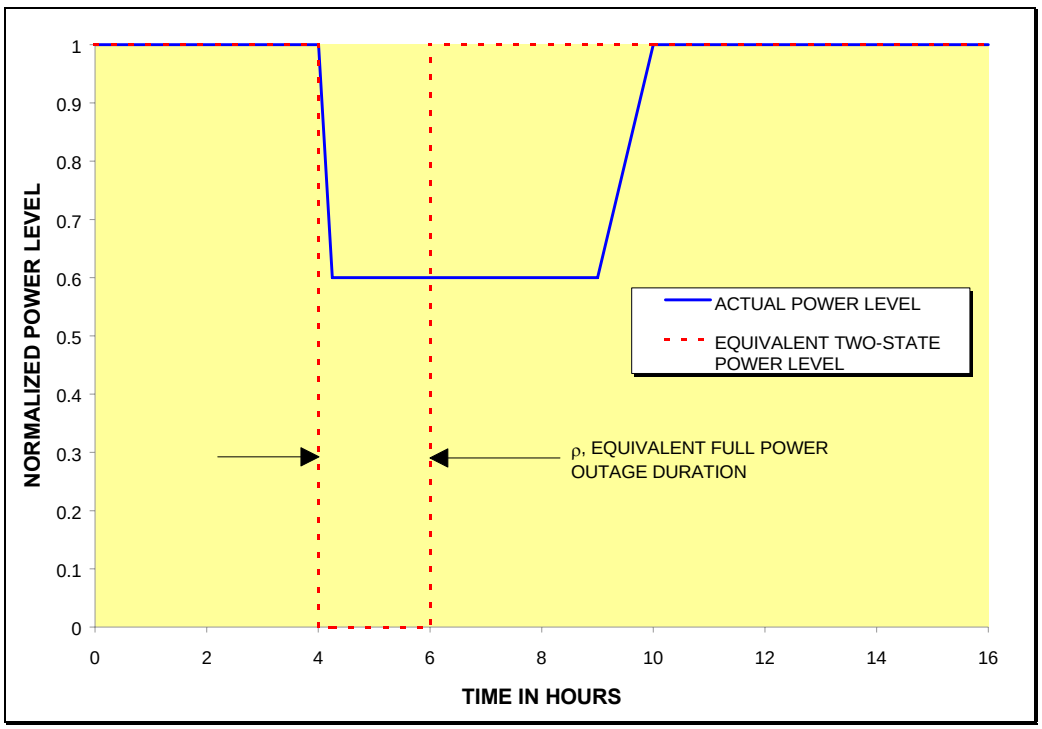

Figure 13.2-2: Representation of Power Transient Scenario with Equivalent Two-State Model

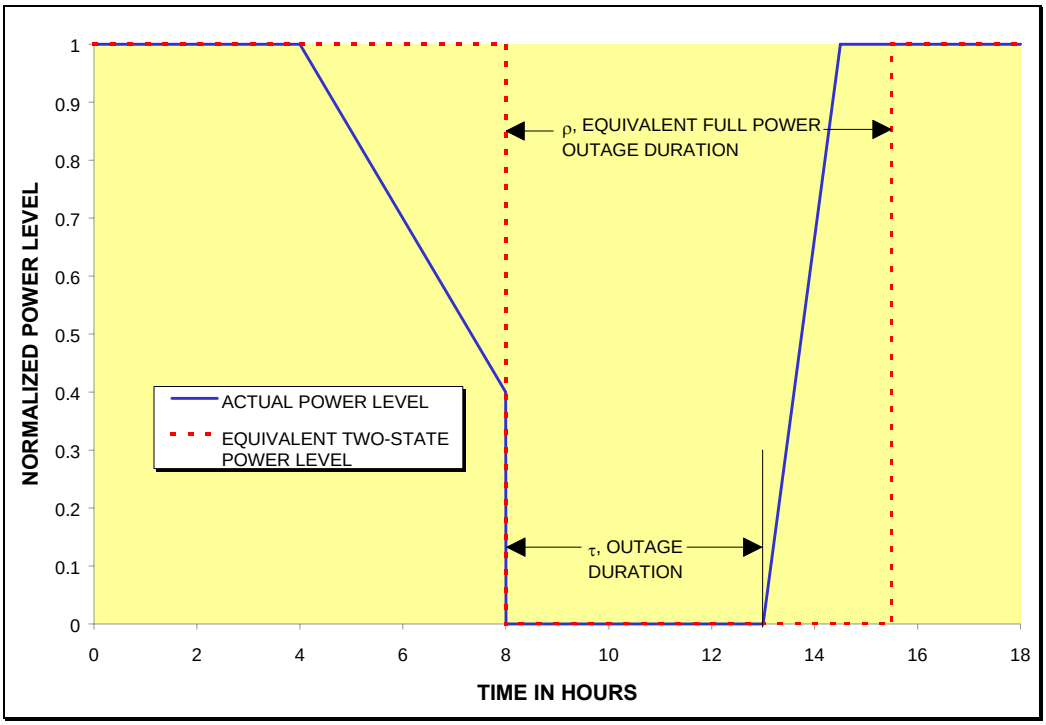

Figure 13.2-3: Representation of Plant Shutdown Scenario by Equivalent Two-State Model

13.2.1 NUCLEAR HEAT SUPPLY FACILITY

The purpose of this section is to document the plant reliability and availability assessments for the NHSS. This includes the Reactor and Reactor Systems, the PHTS, the SHTS, and the associated support systems that support only the NHSS.

13.2.1.1 Design Characterization Assumptions

The purpose of this section is to document the assumptions about the design features and capabilities of the reactor and reactor systems that are important to determining the reliability performance. This includes the modes and states that are supported by the reactor and reactor systems, the possible transitions from different modes and states, the expected response of the plant to transients and reactor trip events, and the capabilities to perform maintenance on certain systems and subsystems while the plant is producing electric power and/or hydrogen production. The assumptions made with respect to NHSS design characteristics are provided in the List of Assumptions.

13.2.1.2 Planned Outage Considerations

The purpose of this section is to document the key characteristics associated with planned outages for the reactor, reactor systems and HTS. This includes planned outages for maintenance, in-service inspections and testing, special tests and inspections that may be needed for the demonstration plant, and component replacement that is done on a planned basis. The assumptions made with respect to planned maintenance and testing are provided in the List of Assumptions. The following are planned maintenance considerations impacting the plant availability, based on Section 12, Maintainability:

- Periodic planned maintenance, inspection, and In-Service Inspection (ISI) will be performed on the reactor and primary heat transport systems every 5 years. This outage will have a duration of approximately 25 days.
- The planned outage at the 10 year interval will include inspection of the IHXs, inspection of the turbine-generator, plus all of the 5 year maintenance items. This outage will have a duration of approximately 40 days.
- The high temperature section of the Intermediate Heat Exchanger, IHX A, will be replaced every 10 years. The low temperature section of the Intermediate Heat Exchanger, IHX B, will not be replaced during the plant lifetime.
- The core reflector will be replaced every 20 years. The outage at 20 years will have a duration of approximately 180 days.

The overall plant availability and capacity factors will be different depending on how well the planned outages for the NHSS, PCS, and HPS can be coordinated to effectively "shadow" the production losses from the less frequent and shorter outages.

13.2.1.3 Availability Model for Reactor and Heat Transport Systems

The purpose of this section is to present the reliability performance model and the key assumptions that are made in the course of developing this model. The model is comprised of a set of scenarios involving both planned and unplanned production losses including scenarios that involve reactor trip events, plant shutdowns, and power reduction transients.

13.2.1.4 Reliability Data for Reactor and Heat Transport Systems

The purpose of this section is to document the reliability performance data that is used to quantify the reliability performance model for the reactor and reactor systems. The data includes the assumed frequencies and durations of planned outages and estimates of the plant performance impact vectors. Some preliminary data for component failure rates and scenario initiating event frequencies is presented in Appendix 13B.

13.2.2 HYDROGEN PRODUCTION FACILITY

The purpose of this section is to document the plant reliability and availability assessments for the HPS. This includes the major components and subsystems of the HPS and the associated support systems.

13.2.2.1 Design Characterization Assumptions

The purpose of this section is to document the assumptions about the design features and capabilities of the HPS major components and subsystems that are important to determining the reliability performance. This includes the modes and states that are supported by the reactor and reactor systems, the possible transitions from different modes and states, the expected response of the plant to transients and reactor trip events, and the capabilities to perform maintenance on certain systems and subsystems while the plant is producing electric power and/or hydrogen production. The assumptions made with respect to HPS design characteristics are provided in the List of Assumptions.

13.2.2.2 Planned Outage Considerations

The purpose of this section is to document the key assumptions associated with planned outages associated with the HPS major components and subsystems. This includes planned outages for maintenance, in-service inspections and testing, special tests and inspections that may be needed for the demonstration plant, and component replacement that is done on a planned basis. The assumptions made with respect to planned outages and testing are provided in the List of Assumptions. The following are planned maintenance considerations impacting the plant availability, based on Section 12, Maintainability:

- During the initial operating period of the NGNP, preventive maintenance of the HPS will be based on the manufacturer's recommendations. As time progresses and operating experience is gained, the maintenance program will be refined to optimize the preventive maintenance frequency and scope.

13.2.2.3 Availability Model for Hydrogen Production System

The purpose of this section is to present the reliability performance model and the key assumptions that are made in the course of developing this model. The model is comprised of a set of scenarios involving both planned and unplanned production losses including scenarios that involve reactor trip events, plant shutdowns, and power reduction transients.

13.2.2.4 Reliability Data for Hydrogen Production System

The purpose of this section is to document the reliability performance data that is used to quantify the reliability performance model for the HPS major components and subsystems. The data includes the assumed frequencies and durations of planned outages and estimates of the plant performance impact vectors. Some preliminary data for component failure rates and scenario initiating event frequencies is presented in Appendix 13B.

13.2.3 POWER CONVERSION FACILITY

The purpose of this section is to document the plant reliability and availability assessments for the PCS. This includes the major components and subsystems of the PCS and the associated support systems.

13.2.3.1 Design Characterization Assumptions

The purpose of this section is to document the assumptions about the design features and capabilities of the PCS major components and subsystems that are important to determining the reliability performance. This includes the modes and states that are supported by the reactor and reactor systems, the possible transitions from different modes and states, the expected response of the plant to transients and reactor trip events, and the capabilities to perform maintenance on certain systems and subsystems while the plant is producing electric power and/or hydrogen production. The assumptions made with respect to PCS design characteristics are provided in the List of Assumptions.

13.2.3.2 Planned Outage Considerations

The purpose of this section is to document the key assumptions associated with planned outages associated with the PCS major components and subsystems. This includes planned outages for maintenance, in-service inspections and testing, special tests and inspections that may be needed for the demonstration plant, and component replacement that is done on a planned basis. The maintenance frequencies and durations assumed for the turbine, generator, and balance of plant are based on NERC-GADS [13-14] data for fossil plants of all fuel types, 100-199 MW, from the years 2001-2005. The following are planned maintenance considerations impacting the plant availability, based on data from [13-14] and Section 12, Maintainability:

- Major turbine overhauls will occur on an approximate 10 year interval and will last for approximately 30 days.
- Other planned maintenance on the turbine will require an effective annual average value of less than 4 days per year.

- Planned maintenance on the generator will require an effective annual average value of less than 2 days per year.

13.2.3.3 Availability Model for Power Conversion System

The purpose of this section is to present the reliability performance model and the key assumptions that are made in the course of developing this model. The model is comprised of a set of scenarios involving both planned and unplanned production losses including scenarios that involve reactor trip events, plant shutdowns, and power reduction transients.

13.2.3.4 Reliability Data for Power Conversion System

The purpose of this section is to document the reliability performance data that is used to quantify the reliability performance model for the PCS Major Components and Subsystems. The data includes the assumed frequencies and durations of planned outages and estimates of the plant performance impact vectors. Some preliminary data for component failure rates and scenario initiating event frequencies is presented in Appendix 13B.

13.2.4 NGNP BALANCE OF PLANT SYSTEMS

The purpose of this section is to document the availability performance assessment for the BOP systems for the NGNP. By definition BOP Systems include any systems that are needed to support two or more of the NHSS, PCS, and HPS, or their respective support system covered in the previous sections. Examples include the electric power systems, and Heating, Ventilation and Air Conditioning Systems (HVAC) in structures with two or more of the major systems.

13.2.4.1 Design Characterization Assumptions

The purpose of this section is to document the assumptions about the design features and capabilities of the BOP Systems that are important to determining the reliability performance. This includes the modes and states that are supported by the reactor and reactor systems, the possible transitions from different modes and states, the expected response of the plant to transients and reactor trip events, and the capabilities to perform maintenance on certain systems and subsystems while the plant is producing electric power and/or hydrogen production. The assumptions made with respect to BOP design characteristics are provided in the List of Assumptions.

13.2.4.2 Planned Outage Considerations

The purpose of this section is to document the key assumptions associated with planned outages associated with the BOP Systems. This includes planned outages for maintenance, in-service inspections and testing, special tests and inspections that may be needed for the demonstration plant, and component replacement that is done on a planned basis. The following are planned maintenance considerations impacting the plant availability, based on data from Reference [13-14] and Section 12, Maintainability:

- Planned outages for BOP equipment will require no more than 3 days per year.

13.2.4.3 Availability Model for BOP Systems

The purpose of this section is to present the reliability performance model and the key assumptions that are made in the course of developing this model. The model is comprised of a set of scenarios involving both planned and unplanned production losses including scenarios that involve reactor trip events, plant shutdowns, and power reduction transients.

13.2.4.4 Reliability Data for BOP Systems

The purpose of this section is to document the reliability performance data that is used to quantify the reliability performance model for the BOP Systems. The data includes the assumed frequencies and durations of planned outages and estimates of the plant performance impact vectors. Some preliminary data for component failure rates and scenario initiating event frequencies is presented in Appendix 13B.

13.2.5 OVERALL AVAILABILITY ASSESSMENT FOR THE PBMR NGNP

The purpose of this section is to present the availability targets and the results of the NGNP availability assessment for the preconceptual design. The key contributors to the plant availability performance will be defined.

13.2.5.1 Summary of Availability Targets

The purpose of this section is to summarize the integrated targets for plant reliability as measured by the plant trip frequency, plant availability, capacity factor, capability factor, forced outage rate, unplanned capability loss factor, and other results appropriate for the metrics defined in Section 13.1. Table 13.2-2 provides the preliminary targets for availability factor, forced outage rate, capacity factor and capacity loss factor for both planned and forced outages. These

values are average values over the life of the plant and not necessarily specific targets for each calendar year, as some of the outages are only expected to occur once every few years.

Note that there is an entry in Table 13.2-2 under the PCS for Capacity Loss Factor (CLF) that is negative. This CLF value represents the excess electric power production during plant states where the NHSS is operating at full capacity, the hydrogen production system is not operating, and the extra heat energy is being converted into electrical output by the PCS. This results in a negative capacity loss factor or, in effect, a small increase in PCS capacity factor. This particular entry is calculated in the following way:

$$NHSS\ CF \times HPU\ CLF \times \frac{(450\ MW - 500 MW)}{450\ MW} = -0.73\% \quad (1)$$

where the product of NHSS CF and HPS CLF represents approximately 26 equivalent full power days per year in this particular plant operating state. The remaining portion of the left side of Equation (1) represents the fractional loss of electrical output, compared to the normal full capacity (in this case, an increase in output, shown as a negative value). The calculation is based on the assumed full power output of 450 MWt during normal operation and the assumed output of 500 MWt when the HPS is not in operation and the NHSS and PCS are operating at full capacity (in this case, excess capacity for PCS). The excess electric power production, when the HPS is not in operation, results in a target capacity factor for the PCS that is slightly higher than the target availability for PCS, as shown in Table 13.2-2.

Table 13.2-3 provides the allocation of capacity loss targets to the systems of the NHSS. Table 13.2-4 provides the allocation of capacity loss targets to the systems of the HPS and Table 13.2-5 provides the allocation of capacity loss targets to the systems of the PCS and balance of plant. For the overall plant availability and capacity factors two modes of operation and two cases of assumptions regarding coordination of the planned outages are developed. The two modes of operation including production of electric power only, and production of both electric power and hydrogen. Different results are obtained when it is assumed that planned outages in the NHS, PCS, and HPS are fully coordinated to shadow down time effects, vs. fully uncoordinated.

Table 13.2-2: Preliminary Capacity Factor Targets for PBMR NGNP

Contributions to CLF	Nuclear Heat Supply System		Power Conversion System		Hydrogen Production System	
	Target	CLF	Target	CLF	Target	CLF
ISI/Shutdown maint./ Major overhaul/ Reconfigure	25 days every 5 years, 40 days every 10 years	1.78%	<40 days every 10 years[1]	1.10%	<30 days every 10 years[1]	0.82%
IHX/Reflector replacement	180 days every 20 years	2.47%	Not applicable	0.00%	Not applicable	0.00%
Other planned outages	Not Applicable	0.00%	<8 days per year	2.19%	<8.4 days per year	2.30%
Unplanned outages – short duration	<10 days per year	2.74%	<7 days per year	<1.92%	<10 days per year	2.74%
Unplanned outages - long duration	<10 days per 10 years	<0.27%	<10 days per 10 years	<0.27%	<10 days per 10 years	<0.27%
Excess Electrical Output	Not applicable	0.00%	See Equation (1)	-0.73%	Not applicable	0.00%
Reduced Output Operations	<2 days per year	<0.55%	<2 days per year	<0.55%	<4 days per year	<1.10%
Unplanned Capacity Loss Factor		<3.7%		<2.1%		<4.2%
Forced Outage Rate		<3.0%		<2.2%		<3.0%
Capacity factor		92.2%		94.7%		92.8%
Availability factor		92.9%		94.6%		94.0%

Plant Operating State	Overall Plant Availability Factor		Overall Plant Capacity Factor	
	Coordinated	Uncoordinated	Coordinated	Uncoordinated
Power Generation Only	89.5%	87.9%	88.4%	87.3%
Power and Hydrogen	84.8%	82.6%	82.8%	81.0%

Table 13.2-3: Allocation of Capacity Loss Targets for NHSS

Outage Type	Description	Outage Allocation	Corresponding CLF
Planned	ISI/Shutdown maintenance	25 or 40 days every 5 years	0.0178
	IHX/Reflector replacement	<180 days per 20 years	0.0247
		Total Planned	**0.0325**
Unplanned	Reactor Vessel/Piping	<10 days per 10 years	0.0027
	Fuel Handling System	<3 days per year	0.0082
	Intermediate Heat Exchanger	<2 days per year	0.0055
	Circulator	<3 days per year	0.0082
	Reduced Output	<2 days per year	0.0055
	Other	<2 days per year	0.0055
		Total Unplanned	**0.0356**
		Overall Total	**0.0681**

Table 13.2-4: Allocation of Capacity Loss Targets for HPS

Outage Type	Description	Outage Allocation	CLF
Planned	Major overhaul/reconfiguration	<30 days every 10 years	0.0082
	Process Heat Exchanger Catalyst Replacement	<3 days every 18 months	0.0055
	Process Heat Exchanger Tube Replacement	<7 days every 5 years	0.0038
	Other Hydrogen Plant Maintenance	<5 days per year	0.0137
		Total Planned	**0.0312**
Unplanned	Process Heat Exchanger	<4 days per year	0.0110
	Reduced Output	<4 days per year	0.0110
	Other Hydrogen Plant	<7 days per year	0.0192
		Total Unplanned	**0.0412**
		Overall Total	**0.0724**

Table 13.2-5: Allocation of Capacity Loss Targets for PCS and BOP

Outage Type	Description	Outage Allocation	CLF
Planned	Steam Turbine/Generator Major Overhaul	<40 days every 10 years	0.0110
	Other Steam Turbine	<3 days per year	0.0082
	Other Generator	<2 days per year	0.0055
	Balance of Plant	<3 days per year	0.0082
		Total Planned	**0.0329**
Unplanned	Steam Turbine	<3 days per year	0.0082
	Generator	<2 days per year	0.0055
	Balance of Plant	<3 days per year	0.0082
	Reduced Output	<2 days per year	0.0055
		Total Unplanned	**0.0274**
		Overall Total	**0.0603**

(1) Allocations for power conversion system and balance of plant are based on NERC-GADS [13-14] data for fossil plants of all fuel types, 100-199 MW, from the years 2001-2005, representing 1795 unit-years of operation.

13.3 COMPLEXITY, RISKS, AND FUTURE STUDIES

13.3.1 COMPLEXITY AND RISKS

With respect to plant availability, there is a risk associated with any outage that would require defueling the reactor, as these outages are likely to extend to 6 months in duration or longer. This includes outages for core reflector replacement, IHX or circulator replacement, and possibly outages resulting from failures in the core unloading system. Outages of 6 months or longer could also result from failures of the helium pressure boundaries (i.e., vessel, piping, or welds).

13.3.2 FUTURE STUDIES

This is a preconceptual design phase assessment undertaken to get an initial scoping of the NGNP metrics. As such, it is understood that some of the planned outages will be refined and that the forced outage allowances will be better quantified in conceptual design

Due to uncertainties in the operation of the fuel handling system, future studies will be required to gain a better perspective on the performance of the core unloading system and other parts of the fuel handling system and their impact on plant availability. Future studies may also be required to develop a better understanding of the HPS configuration, components, and reliability and maintainability performance characteristics.

Recent analyses related to pressure boundary failure initiating event frequencies will be reviewed for possible inclusion in the database for the availability models that will be developed later.

REFERENCES

[13-1] Hannaman, G.W., "GCR Reliability Data Bank Status Report," GA Report GA-A14839, July 1978.

[13-2] "Generic Data Base for Data and Models Chapter of the National Reliability Evaluation Program (NREP) Guide," EG&G Idaho Report EGG-EA-5887, June 1982.

[13-3] NUREG/CR-1363, "Data Summaries of Licensee Event Reports of Valves at U.S. Commercial Nuclear Power Plants - January 1976 through December 1980," Revision 1, October 1982.

[13-4] NUREG/CR-5500, "Reliability Study: Combustion Engineering Reactor Protection System, 1984-1998," Vol. 10, November 2001.

[13-5] NUREG/CR-5500, "Reliability Study: Babcock & Wilcox Reactor Protection System, 1984-1998," Vol. 11, November 2001.

[13-6] NUREG/CR-4639, Nuclear Computerized Library for Assessing Reactor Reliability (NUCLARR), Volume 5, Part 3: Hardware Component Failure Data, Revision 4, September 1994.

[13-7] NUREG/CR-6890, "Reevaluation of Station Blackout Risk at Nuclear Power Plants," December 2005.

[13-8] Tennessee Valley Authority Watts Bar Nuclear Plant Unit 1 Probabilistic Risk Assessment Individual Plant Examination, Section 3 Front-end Analysis, Revision 0, September 1, 1992.

[13-9] NUREG/CR-2098, "Common Cause Fault Rates for Pumps, 1972-1980," February 1983.

[13-10] "Synthesis of Experience Data for Risk Assessment and Design Improvement of Gas-Cooled Reactors," GA Report GA-A14924, May 1978.

[13-11] NUREG/CR-5497, "Common-Cause Failure Parameter Estimations," October 1998.

[13-12] NUREG/CR-5750, "Rates of Initiating Events at U.S. Nuclear Power Plants: 1987-1995," February 1999.

[13-13] Procaccia H, Arsenis P, Sypros P, Aufort P, EDF/ Joint Research Centre, "European Industry Reliability Data Bank EiReDa Third Edition," 1998.

[13-14] North American Electric Reliability Corporation, Generating Availability Data System, "Generating Availability Reports," on website: www.nerc.com/~gads, accessed February 2007.

LIST OF ASSUMPTIONS

The following list of assumptions is a compilation of the assumptions presented in the various subsections above. The list includes assumptions on plant design and assumptions about planned maintenance and testing.

Plant System	Assumptions
13.1 Nuclear Heat Supply System	a. Any outage that requires defueling the reactor will have a duration of at least 180 days, whether the outage is planned or forced. b. Maintenance is not possible on the reactor unit or primary heat transport system without a complete shutdown of the NGNP.
13.2 Hydrogen Production System	a. Maintenance on the process heat exchanger cannot be performed while the electrical generation plant is in operation. This includes catalyst replacement and process heat exchanger tube replacement. b. The hydrogen production system cannot operate unless the electrical generation plant is in operation. c. Following a reactor trip, the hydrogen production system will automatically shut down. d. The process coupling heat exchanger will be removed from service every 18 months to replace the catalyst. e. The process coupling heat exchanger catalyst replacement will require the plant to be shut down for no more than 3 days. f. The process coupling heat exchanger will be removed from service every 5 years to have all of the tubes replaced. Individual tube replacement may occur during the 5-year interval, as necessary. g. The 5 year process coupling heat exchanger tube replacement will require the plant to be shut down for no more than 7 days. h. Planned maintenance on the other components within the hydrogen production system will require no more than 7 days each year.
13.3 Power Conversion System	a. In the event of a reactor trip, the PCS will automatically trip the turbine and generator. Steam bypass to the condenser will be provided to continue to remove heat from the SHTS following a turbine trip. b. A turbine trip or generator trip during operation will result in an automatic reactor trip. c. Major turbine overhauls will occur on an approximate 10 year interval and will last for approximately 30 days.

Plant System	Assumptions
	d. Other planned maintenance on the turbine will require less than 4 days per year. e. Planned maintenance on the generator will require less than 2 days per year.
13.4 Balance of Plant	a. The BOP, PCS, HPS, and NHSS equipment requiring electric power will receive power from the turbine-generator during normal plant operation and from offsite power when generator output is not available. b. Offsite power will be backed up by an on-site diesel generator that will start automatically on loss of offsite power. c. To the extent possible, planned maintenance on balance of plant components will be coordinated with other planned outages for major equipment inspection and maintenance. d. Planned maintenance on the balance of plant components will require less than 3 days per year.

APPENDICES

APPENDIX 13A FORMULAS USED IN AVAILABILITY AND CAPACITY FACTOR ALLOCATIONS

The overall plant Availability Factor, A_{ALL}, is given by:

$$A_{ALL} = A_{NHS} A_{PCS} A_{HPU} \quad \textbf{(A.1)}$$

Where:

A_{ALL} = overall plant availability factor, fraction of time plant is capable of generating power and producing hydrogen

A_{NHS} = fraction of time Nuclear Heat Supply System is available

A_{PCS} = fraction of time Power Conversion System is available to produce electrical power

A_{HPU} = fraction of time Hydrogen Production System is available to produce hydrogen

The plant Availability Factor for production of electric power only, A_{ELEC}, is given by:

$$A_{ELEC} = A_{NHS} A_{PCS} \quad \textbf{(A.2)}$$

Where:

A_{ELEC} = plant availability factor for electric power production only, the fraction of time plant is capable of generating power, but not producing hydrogen

A similar Availability Factor for production of hydrogen only can be calculated in a similar manner, but the current design does not allow for hydrogen production without electric power production.

Equations A.1 and A.2 assume that the contribution to availability from each of the terms on the right hand side of the equation are mutually independent.

The planned Availability Factor for the overall plant, A_P, is given by:

$$A_P = 1 - \frac{D_{NHSP}}{365.25} - \frac{D_{PCSP}}{365.25} - \frac{D_{HPUP}}{365.25} \quad \textbf{(A.3)}$$

The Availability Factor for the overall plant due to forced short duration outages, A_{FS}, is given by:

$$A_{FS} = A_{NHSFS} A_{PCSFS} A_{HPUFS} = \left[1 - \frac{D_{NHSFS}}{365.25}\right]\left[1 - \frac{D_{PCSFS}}{365.25}\right]\left[1 - \frac{D_{HPUFS}}{365.25}\right] \quad \textbf{(A.4)}$$

The Availability Factor for the overall plant due to forced long duration outages, A_{FL}, is given by:

$$A_{FL} = A_{NHSFL} A_{PCSFL} A_{HPUFL} = \left[1 - \frac{D_{NHSFL}}{365.25}\right]\left[1 - \frac{D_{PCSFL}}{365.25}\right]\left[1 - \frac{D_{HPUFL}}{365.25}\right] \quad \textbf{(A.5)}$$

Where:

A_P = fraction of time that the Nuclear Heat Supply System, Power Conversion System, and Hydrogen Production System are not in planned outages

A_{FL} = fraction of time that the Nuclear Heat Supply System, Power Conversion System, and Hydrogen Production System are not in forced outages of long duration

A_{FS} = fraction of time that the Nuclear Heat Supply System, Power Conversion System, and Hydrogen Production System are not in forced outages of short duration

A_{NHSFS} = fraction of time Nuclear Heat Supply System is not in short (< 6 month) forced outages

A_{NHSFL} = fraction of time Nuclear Heat Supply System is not in long (> 6 month) forced outage

A_{PCSFS} = fraction of time Power Conversion System is not in short forced outages

A_{PCSFL} = fraction of time Power Conversion System is not in long forced outage

A_{HPUFS} = fraction of time Hydrogen Production System is not in short forced outages

A_{HPUFL} = fraction of time Hydrogen Production System is not in long forced outage

D_{PCSP} = average number of days per year spent in planned outages for the Power Conversion System

D_{NHSP} = average number of days per year spent in planned outages for the Nuclear Heat Supply System

D_{HPUP} = average number of days per year spent in planned outages for the Hydrogen Production System

D_{NHSFS} = average number of days per year spent with Nuclear Heat Supply System in short forced outages

D_{NHSFL} = average number of days per year spent with Nuclear Heat Supply System in long forced outages

D_{PCSFS} = average number of days per year spent with Power Conversion System in short forced outages

D_{PCSFL} = average number of days per year spent with Power Conversion System in long forced outages

D_{HPUFS} = average number of days per year spent with Hydrogen Production System in short forced outages

D_{HPUFL} = average number of days per year spent with Hydrogen Production System in long forced outages

Equation A.3 assumes that the contributions to planned outage from ISI, PCS overhaul, HPD overhaul and reconfiguration, and NHS planned maintenance are fully coordinated and fixed.

The overall plant Capacity Factor, C_{ALL}, which is developed using modeling assumptions similar to that for availability, is given by:

$$C_{ALL} = A_{ALL}\left[1-\frac{D_{NHSRPO}}{356.25}\right]\left[1-\frac{D_{PCSRPO}}{365.25}\right]\left[1-\frac{D_{HPURPO}}{365.25}\right] \quad \textbf{(A.6)}$$

Where:

D_{NHSRPO} = effective full power days per year lost production due to reduced power operation for NHSS

D_{PCSRPO} = effective full power days per year lost production due to reduced power operation for PCS

D_{HPURPO} = effective full power days per year lost production due to reduced output operation for HPS

The Capacity Factor for electric power production alone, C_{ELEC}, is given by:

$$C_{ELEC} = A_{ELEC}\left[1-\frac{D_{NHSRPO}}{356.25}\right]\left[1-\frac{D_{PCSRPO}}{365.25}\right] \quad \textbf{(A.7)}$$

The forced outage rate is given by:

$$FOR = 1 - \left(\frac{A_{ALL}}{A_P} \right) \quad \textbf{(A.8)}$$

The unplanned capacity loss factor is given by:

$$UCLF = 1 - \left(\frac{C_{ALL}}{A_P} \right) \quad \textbf{(A.9)}$$

APPENDIX 13B NGNP RELIABILITY DATA

The purpose of this appendix is to summarize the reliability data chosen for the NGNP availability assessment. Since there is no operating experience for the NGNP, the availability assessment uses generic component failure rates, maintenance unavailabilities, initiating event frequencies, and common cause parameters. Generic data developed for U.S. LWRs is used when available. The data provided in this section is preliminary and will be revised and expanded as the design details of the NGNP become available.

Component Failure Data

The majority of generic failure data was selected from the most up-to-date database available to the industry: the Nuclear Computerized Library for Assessing Reactor Reliability (NUCLARR) [13-6]. This database was taken from the document of the same name, which was revised and published in September 1994. The database and associated software for NUCLARR was developed at Idaho National Engineering and Environmental Laboratory (INEEL) by compiling data from many sources (PRAs and other sources), categorizing it, and creating aggregated generic distributions.

The generic failure rates for demand failures of PRA components are provided in Table 13B-1. Table 13B-1 provides the component type, failure mode, mean failure rate, and the reference source of the data. The generic failure rates for time dependent failures of PRA components are provided in Table 13B-2. Table 13B-2 provides the component type, failure mode, mean failure rate, the parameter designator used in the PRA model, and the reference source of the data.

Table 13B-1: Component Demand Failure Rates

Component	Failure Mode	Mean	Reference
Fan	Fail to Start	7.34E-03	[13-6]
Helium Circulator	Fail to Start	3.75E-04	[13-1]
Motor Driven Pump	Fail to Start	1.71E-03	[13-1]
Air Operated Valve	Fail on Demand	1.74E-03	[13-6]
Check Valve	Fail to Open	7.67E-05	[13-3]
Check Valve	Fail to Reclose	7.67E-05	[13-3]
Relief Valve (Water/Steam)	Fail to Open	1.03E-02	[13-5]
Relief Valve (Water/Steam)	Fail to Reclose	3.14E-03	[13-6]
Relief Valve (Helium)	Fail to Open	2.66E-04	[13-1]
Relief Valve (Helium)	Fail to Reclose	3.75E-02	[13-1]
Diesel Generator	Fail to Start	5.01E-03	[13-7]
Circuit Breaker	Fail to Close	1.39E-01	[13-6]
Circuit Breaker	Fail to Open	8.77E-02	[13-6]
Helium Stop Valve	Fail on Demand	3.75E-04	[13-1]
Heat Exchanger Louvers(1)	Fail on Demand	3.05E-03	[13-6]
Motor Operated Valve	Fail to Open	6.28E-03	[13-6]
Motor Operated Valve	Fail to Close	3.36E-03	[13-6]
Control Rods	Fail to Insert	8.37E-07	[13-4],[13-5]
Reactor Trip Signal	Fail on Demand	7.80E-07	[13-4],[13-5]

(1) Air operated damper data used.

Table 13B-2: Component Time Dependent Failure Rates

Component	Failure Mode	Mean (per hour)	Reference
Fan	Fail to Run	1.06E-05	[13-6]
Helium Circulator	Fail to Run	3.75E-05	[13-1]
Heat Exchanger	Plug	2.62E-07	[13-6]
Heat Exchanger	Rupture – Internal Leak	1.00E-07	[13-6]
Motor Driven Pump	Fail to Run	3.75E-05	[13-1]
Tank	Rupture	1.71E-08	[13-1]
Air Operated Valve	Transfer Closed	4.39E-07	[13-6]
Check Valve	Transfer Closed	6.86E-07	[13-6]
Manual Valve	Transfer Closed	1.24E-07	[13-6]
Diesel Generator	Fail to Run in First Hour	2.50E-03	[13-7]
Diesel Generator	Fail to Run after First Hour	8.04E-04	[13-7]
Circuit Breaker	Transfer Open	3.17E-07	[13-6]
Motor Operated Valve	Transfer Closed	2.49E-08	[13-6]
Motor Operated Valve	Transfer Open	7.67E-07	[13-6]
Air Filter	Plug	4.07E-06	[13-6]

Initiating Event Frequencies

This section summarizes the initiating event frequencies chosen for the NGNP availability assessment. The initiating events will be revised and expanded as design details of the NGNP become available.

Loss of Offsite Power

The Loss of Offsite Power initiating event frequency is developed from nuclear plant data for the period 1997 through 2004 [13-7]. The data includes events from all causes of LOSP during reactor critical operation. The mean value of the uncertainty distribution for LOSP frequency developed in [13-7] is 3.59E-02 per reactor critical year. This value is multiplied by the target capacity factor of 0.93 to convert the LOSP frequency to events per calendar year. This yields a mean value of 3.34E-02.

Transient Initiating Events

The preliminary list of transient initiating events for the NGNP availability assessment are shown in Table 13B-3 with the mean value and the reference source of the data.

Table 13B-3: Transient Initiating Event Frequencies

Initiating Event Description	Mean (per calendar year)	Reference
Reactor Trip	5.90E-01	[13-12]
Turbine Trip	5.22E-01	[13-12]
PHTS Circulator Trip	3.02E-01	[13-1]
Loss of IHX Cooling	(LATER)	

Turbine trip, reactor trip, and control rod group withdrawal initiating event frequencies are calculated from [13-12] transient initiating event frequency for PWRs (mean value: 1.22 per critical year) converted to calendar year using 93% availability. The total transient frequency is then apportioned to reactor trip, control rod group withdrawal, and turbine trip based on the number of each type of event in the PWR experience (46% turbine trip, 52% reactor trip, 2% core power excursion). Overall, this is conservative, since the total transient frequency includes other types of events in addition to turbine trip, reactor trip, and core power excursion.

The PHTS Circulator Trip initiating event frequency is calculated from the failure rate for main circulator failure during operation. The exposure time is one year (8760 hours) times the 91.8% availability. This yields an initiating event frequency of 3.02E-01/yr. for Main Circulator Trip.

Helium Pressure Boundary Failure Initiating Events

The preliminary list of helium pressure boundary failure initiating events chosen for the NGNP availability assessment is shown in the Table 13B-4 below with the mean value and the reference source of the data.

Table 13B-4: Helium Pressure Boundary Failure Initiating Event Frequencies

Initiating Event Description	Mean (per calendar year)	Reference
Small HPB break in the Helium Purification, isolable	1.00E-02	*
Small HPB break in the PHTS area, isolable	1.00E-02	*
Small HPB break in the RPV area, non-isolable	1.00E-02	*
Medium HPB break in the Helium Purification, isolable	1.00E-03	*
Medium HPB break in the PHTS area, isolable	1.00E-03	*
Medium HPB break in the RPV area, non-isolable	1.00E-04	*
Large HPB break in the PHTS area, isolable	1.00E-05	*
Large HPB break in the RPV area, non-isolable	1.00E-05	*

∗ Assumed values for initial quantification.

APPENDIX 13C FINAL DESIGN REVIEW PRESENTATION TO BEA

See Section 11, Appendix 11B.

NGNP-14-RPT-001 **May 2007**
Revision 0

NGNP and Hydrogen Production Preconceptual Design Report

Section 14: Safety

Revision 0

APPROVALS

Function	Printed Name and Signature	Date
Author	Edward M. Burns Pebble Bed Modular Reactor (Pty) Ltd.	May 18, 2007
Reviewer	Karl N. Fleming Technology Insights	May 18, 2007
Approval	Michael Correia Pebble Bed Modular Reactor (Pty) Ltd.	May 18, 2007

Westinghouse Electric Company LLC
Nuclear Power Plants
Post Office Box 355
Pittsburgh, PA 15230-0355

©2007 Westinghouse Electric Company LLC
All Rights Reserved

LIST OF CONTRIBUTORS

Name and Organization	Date
Edward G. Wallace Consultant	May 2007
Karl N. Fleming Technology Insights:	May 2007
Fred A. Silady Technology Insights	May 2007
Charles L. Kling Westinghouse Electric Company	May 2007
Stanley A. Ritterbusch Westinghouse Electric Company	May 2007
Ed Brabazon Shaw Environmental & Infrastructure	May 2007

BACKGROUND INTELLECTUAL PROPERTY

Section	Title	Description
NONE		NONE

REVISION HISTORY

RECORD OF CHANGES

Revision No.	Revision Made by	Description	Date
0	Edward M. Burns Pebble Bed Modular Reactor (Pty) Ltd.	Initial Issue	May 18, 2007

DOCUMENT TRACEABILITY

Created to support the following Document(s)	Document Number	Revision
NGNP and Hydrogen Production Preconceptual Design Report	NGNP-01-RPT-001	0

TABLE OF CONTENTS

LIST OF TABLES **14-5**
LIST OF FIGURES **14-6**
14 SAFETY **14-7**
SUMMARY AND CONCLUSIONS **14-7**
INTRODUCTION **14-10**
14.1 TOP LEVEL REQUIREMENTS FOR SAFETY **14-11**
14.2 SAFETY DESIGN APPROACH **14-12**
14.2.1 SAFETY PHILOSOPHY **14-12**
14.2.2 DEFENSE-IN-DEPTH APPROACH **14-13**
14.2.3 SAFETY FUNCTIONS **14-15**
14.2.4 SELECTION OF DESIGN FEATURES TO PERFORM SAFETY FUNCTIONS **14-16**
14.3 RISK-INFORMED PERFORMANCE-BASED SAFETY EVALUATION **14-21**
14.3.1 TOP LEVEL REGULATORY CRITERIA (TLRC) **14-22**
14.3.2 USE OF PRA TO SELECT LICENSING BASIS EVENTS **14-25**
14.3.3 APPROACH TO SAFETY CLASSIFICATION AND SPECIAL TREATMENT **14-29**
14.4 SAFETY EVALUATION OF HYDROGEN PRODUCTION FACILITY **14-33**
14.4.1 BACKGROUND ON SAFETY EVALUATION OF HYDROGEN PRODUCTION **14-33**
14.4.2 APPROACH TO TREATMENT OF HYDROGEN PRODUCTION FACILITY HAZARDS **14-34**
14.4.3 DEVELOPMENT OF EVENT SEQUENCES ASSOCIATED WITH HPF HAZARDS **14-36**
14.5 COMPLEXITIES, RISKS, AND FUTURE STUDIES **14-37**
14.5.1 COMPLEXITY AND RISKS **14-37**
14.5.2 FUTURE STUDIES **14-38**
REFERENCES **14-39**
LIST OF ASSUMPTIONS **14-41**
APPENDICES **14-42**
APPENDIX 14A DEFINITIONS **14-42**
APPENDIX 14B FINAL DESIGN REVIEW PRESENTATION TO BEA **14-48**

LIST OF TABLES

Table 14.2-1: Safety Design Features and SSCs Providing Plant Capability Defense-in-Depth 14-18
Table 14.3-1: Elements of Risk-Informed, Performance-Based Licensing Approach 14-22
Table 14.3-2: Comparison of PBMR and LWR PRA Scope and Structure 14-27

LIST OF FIGURES

Figure 14.2-1: Approach to Defense-in-Depth 14-14
Figure 14.2-2: Safety Function Logic Tree 14-16
Figure 14.3-1: Frequency-Consequence Chart Showing TLRC and Three Categories of Licensing Basis Events AOOs, DBEs, and BDBEs 14-24
Figure 14.3-2: Simple Model of an SSC in Prevention and Mitigation of an LBE Challenge 14-30
Figure 14.3-3: Impact of Safety Classified SSCs in Prevention and Mitigation of LBEs 14-31
Figure 14.4-1: Master Logic Diagram for Initiating Event Analysis 14-35

14 SAFETY

SUMMARY AND CONCLUSIONS

This section summarizes the safety design approach for the NGNP and the safety evaluations that will be performed to confirm that the principles of the safety design approach are fulfilled and that the Top Level Requirements associated with safety and licensing are achieved. The risk-informed and performance-based safety design approach is derived from that developed by PBMR (Pty) Ltd. in support of the design certification for future U.S.-sited plants. This PBMR approach builds upon the successful application of risk-informed methods undertaken as backfits for the current fleet of licensed, operating reactors and is an extension to the methods used in other design certification applications. Section 17, "Licensing and Permitting," describes how the safety design approach described in this section of the PCDR is integrated into the overall NGNP licensing strategy.

The safety design philosophy is to apply the principles of defense-in-depth at a fundamental level in which a diverse combination of inherent reactor characteristics, passive design features and Structures, Systems and Components (SSCs), active engineered systems, and operator actions are deployed to maintain the integrity of robust passive barriers to radionuclide release. The reactor-specific key safety functions are derived in a top-down manner with the objective of protecting the integrity of the multiple barriers to radionuclide release; these include the control of heat generation, control of heat removal, control of chemical attack, maintenance of core and reactor geometry, and maintenance of the reactor building structural integrity. A fundamental aspect of the safety design philosophy is to provide the capability to perform safety functions first through the selection of inherent reactor characteristics and engineered systems that operate on passive design principles and then to support these safety functions with combinations of diverse active engineered systems and operator actions.

The safety design approach for the NGNP is derived from a risk-informed and performance-based model of defense-in-depth. This approach recognizes three major elements: Plant Capability Defense-in-Depth, Programmatic Defense-in-Depth, and a Risk-Informed Evaluation of Defense-in-Depth. These three elements enable the examination of a plant's defense-in-depth capability from different perspectives including those of:

- Designing the plant and the capabilities of its SSCs that perform safety functions
- Defining the programs that ensure the plant will be built as designed and will operate safely throughout the plant lifetime while preserving the intended defense-in-depth capabilities.
- Evaluating how the plant performs its safety functions in the prevention and mitigation of accidents and determining the adequacy of defense-in-depth.

The NGNP safety design approach is framed in terms of reactor-specific safety functions that were developed from the top goal of retaining the inventory of radionuclides primarily within the fuel and then considering the specific functions that when satisfied would protect the integrity of the fuel and other radionuclide transport barriers. The required safety functions include those to:

- Control heat generation (reactivity)
- Control heat removal
- Control chemical attack
- Maintain core and reactor vessel geometry
- Maintain reactor building structural integrity

The safety evaluation for the NGNP will be performed using a risk-informed and performance-based approach. The key elements of this technology-neutral approach include: (1) the use of accident frequency vs. radiological dose criteria that are derived from current U.S. licensing requirements, referred to as Top Level Regulatory Criteria (TLRC), (2) use of a full-scope Probabilistic Risk Assessment (PRA) to select the Licensing Basis Events (LBEs), (3) development of reactor-specific functions, selection of the corresponding safety-related SSCs, and their regulatory design criteria, (4) deterministic design conditions and special treatment requirements for the safety-related SSCs, and (5) a risk-informed evaluation of defense-in-depth.

The NGNP safety design approach is a continuous, iterative process starting with the conceptual design and progressing through the preliminary and final design stages. During the construction and startup phases, as-built reconciliation and startup test results are factored back into the design evaluation such that a complete set of design, engineering, construction, and operational tools are available to support safe plant operations.

The approach to the treatment of hazards associated with the Hydrogen Production Facility (HPF) in the safety evaluation of the NGNP is comprised of the following elements.

- Performance of a Process Hazards Assessment to support the design of the HPF, which includes the Hydrogen Production System (HPS) and buildings
- Preliminary screening evaluation of event sequences associated with HPS process hazards
- Detailed risk analysis of event sequences associated with HPS process hazards and the impact of HPF operations on the NHSS

There are several complexities and risks which must be addressed during the conceptual design and subsequent licensing phases. These include:

- Limited experience with licensing non-LWR power plants.
- Limited experience with licensing non-electric power plants.
- Lack of experience with PRA involving combustible material facilities.

During the conceptual design of the NGNP, the above issues will be specifically addressed in the successful completion of the safety evaluation. A key element of that evaluation will be the completion of the conceptual design phase of a full scope PRA that addresses all internal and external hazards, including those associated with the HPF and other facilities of the NGNP. This preliminary PRA is then developed further during the final design and construction phases of the project such that a final PRA that reflects the as-built plant is available to support plant operations.

INTRODUCTION

The purpose of this section is to summarize the safety design philosophy and approach for the NGNP and the risk-informed and performance-based safety evaluations that will be performed to confirm that the principles of the safety design approach are fulfilled and that the Top Level Requirements associated with safety and licensing are achieved. This safety design approach is based on the risk-informed and performance-based licensing approach derived from that developed by PBMR (Pty) Ltd. in support of the design certification for future U.S.-sited plants ([14-1] through [14-4]).

The Top Level Requirements for the safety evaluation are listed in Section 14.1. The safety design philosophy that has been selected for the NGNP to set the foundation for meeting these requirements is covered in Section 14.2. The risk-informed and performance-based approach to supporting the design, evaluating the safety characteristics and for providing technical input to the licensing process is described in Section 14.3. In Section 14.4 the aspects of the safety evaluation specific to the Hydrogen Production Facility and associated support systems and facilities are described. Complexities, risks and future studies are addressed in Section 14.5.

All acronyms are defined in PCDR Appendix A.

14.1 TOP LEVEL REQUIREMENTS FOR SAFETY

The NGNP safety and associated licensing requirements flow from the Top Level Requirements set forth in Section 2. Included are overall NGNP requirements as well as specific requirements for the Nuclear Heat Supply System (NHSS) and other NGNP facilities. Five safety and licensing design basis requirements are listed for the NHSS:

- The NHSS shall be designed in accordance with the generic top-level, nuclear regulatory criteria that are direct and quantitative measures of nuclear-related risks and consequences, plus all applicable governmental codes and regulations.
- The NHSS shall meet the top-level regulatory criteria without credit for sheltering or evacuating the public beyond the plant's exclusion area boundary, with the intended result that the Emergency Planning Zone (EPZ) is limited to the Exclusion Area Boundary (EAB).
- The NHSS shall meet the top level regulatory criteria without reliance on prompt operator action, the control room or its contents, including the automated plant process control system, or on auxiliary power supplies (other than batteries).
- Design requirements supporting safety and licensing objectives, that are incremental to those employed in conventional power plant design, construction, operation and maintenance and quality assurance practices, shall be developed using the principles of risk-informed, performance-based regulation.
- The NHSS shall be equipped with provisions to safely shutdown the reactor in the unlikely event the central control room becomes uninhabitable.

Three additional safety and licensing requirements are listed for the Hydrogen Production Facility (HPF):

- The hydrogen production facilities, including the conversion, storage, and distribution systems, shall comply with the requirements of 29 CFR 1910.103, Occupational Safety and Health Standards, Subpart H - Hazardous Materials, Hydrogen.
- In the event that the HPU facility also produces and stores significant quantities of oxygen, the requirements of 29 CFR 1910.104, Oxygen, shall be applied.
- The design, operation and maintenance of the HPU shall comply with 29CFR 1910.119, “Process Safety Management of Highly Hazardous Chemicals”.

14.2 SAFETY DESIGN APPROACH

The purpose of this Section is to describe the safety design approach of the PBMR-based reactor design for the NGNP. The key elements of the safety design approach include the safety philosophy, the safety functions, and the design provisions to implement these functions.

14.2.1 Safety Philosophy

The NGNP safety design is based on the PBMR design which has an operational and safety pedigree well founded in prior HTGRs in general and in German pebble bed reactors in particular. The PBMR design derives maximum safety benefits from its natural characteristics. This gives notably advantageous performance when compared to established reactor designs, which rely upon engineered safety systems to achieve acceptable levels of safety. Safety characteristics include:

- All-ceramic fuel elements, of well proven design, ensure confinement of fission products up to temperatures in excess of those predicted during design basis accidents,
- Negative temperature coefficient of reactivity over entire operating range,
- Low power density and high thermal capacity ensure that fuel temperatures change relatively slowly during transients and accidents.

These characteristics mean that:

- The inherent negative temperature coefficient and the fuel characteristics, together with design features, are such that imbalances in heat generation and heat removal will be restored without active engineered systems and will not result in uncontrolled power excursions,
- Decay heat removal is ensured, even in the event that active engineered systems fail,
- No design basis accident will lead to the loss of fuel integrity, thus ensuring confinement of fission products that are retained within the fuel particles,
- Core geometry and selection of materials allow decay heat to be dissipated by inherently passive mechanisms,
- The helium coolant is not required for decay heat removal, and
- No prompt operator action is required following the occurrence of accident conditions to meet safety functions.

The safety design philosophy is to apply the principles of defense-in-depth at a fundamental level in which a diverse combination of inherent reactor characteristics, passive design features and SSCs, active engineered systems, and operator actions are deployed to

maintain the integrity of robust passive barriers to radionuclide release. Safety functions include those that are required to meet the top level safety requirements as well as those that are included to support plant reliability and provide additional levels of defense-in-depth. The reactor specific key safety functions are derived in a top-down manner with the objective of protecting the integrity of the multiple barriers to radionuclide release and include the control of heat generation, control of heat removal, control of chemical attack, maintenance of core and reactor geometry, and maintenance of the reactor building structural integrity.. A fundamental aspect of the safety design philosophy is to provide the capability to perform the safety functions first through the selection of inherent reactor characteristics and engineered systems that operate on passive design principles and then to support these safety functions with combinations of diverse active engineered systems and operator actions.

The safety philosophy guiding the design of the PBMR starts with the application of defense-in-depth principles in making fundamental design selections that are reflected in the inherent reactor characteristics and the design characteristics of multiple, robust, and passive barriers to radionuclide release. Conservative design approaches are applied to support stable plant operation with large margins to safety limits to prevent transients from challenging the plant safety functions. In the event that safety functions are challenged, the safety philosophy is to utilize the inherent reactor characteristics and passive design features to fulfill the safety functions. Additional active engineered systems and operator actions are provided to both reduce the challenges to plant safety and to provide an element of defense-in-depth in preventing and mitigating accidents. The basic safety philosophy is that the plant shall be designed, wherever possible, to avoid the need for early operator intervention, or the early functioning of any active systems (i.e. those with moving mechanical parts or requiring AC electrical power), in order to maintain nuclear safety.

14.2.2 Defense-in-Depth Approach

The defense-in-depth approach for the NGNP is derived from a risk-informed and performance-based model of defense-in-depth that was developed to support the U.S. design certification for the PBMR [14-4]. An overview of this approach is described in Figure 14.2-1. This approach recognizes three major elements: Plant Capability Defense-in-Depth, Programmatic Defense-in-Depth, and a Risk-Informed Evaluation of Defense-in-Depth. These three elements enable the examination of a plant's defense-in-depth capabilities from different perspectives including those of:

- Designing the plant and the capabilities of its SSCs that perform safety functions,
- Defining the programs that ensure the plant will be built as designed and will operate safely throughout the plant lifetime while preserving the intended defense-in-depth capabilities, and
- Evaluating how the plant performs its safety functions in the prevention and mitigation of accidents and determining the adequacy of defense-in-depth.

These elements are not exclusive. They represent complementary and overlapping perspectives from which to apply defense-in-depth principles.

Plant Capability Defense-in-Depth refers to the use of multiple lines of defense and conservative design approaches in the design of SSCs that perform safety functions. These lines of defense include multiple barriers, inherent reactor characteristics, and engineered features and SSCs whose safety functions serve to protect the integrity of these barriers.

Barriers serve the roles of preventing and mitigating radionuclide transport during normal operation, transients, and accidents, and as well as that of protecting the plant and its SSCs from external hazards. The barriers include physical barriers, safety systems that mitigate the transport of radionuclides, time to implement emergency protective actions and siting considerations for limiting public exposures and protecting the plant from external hazards.

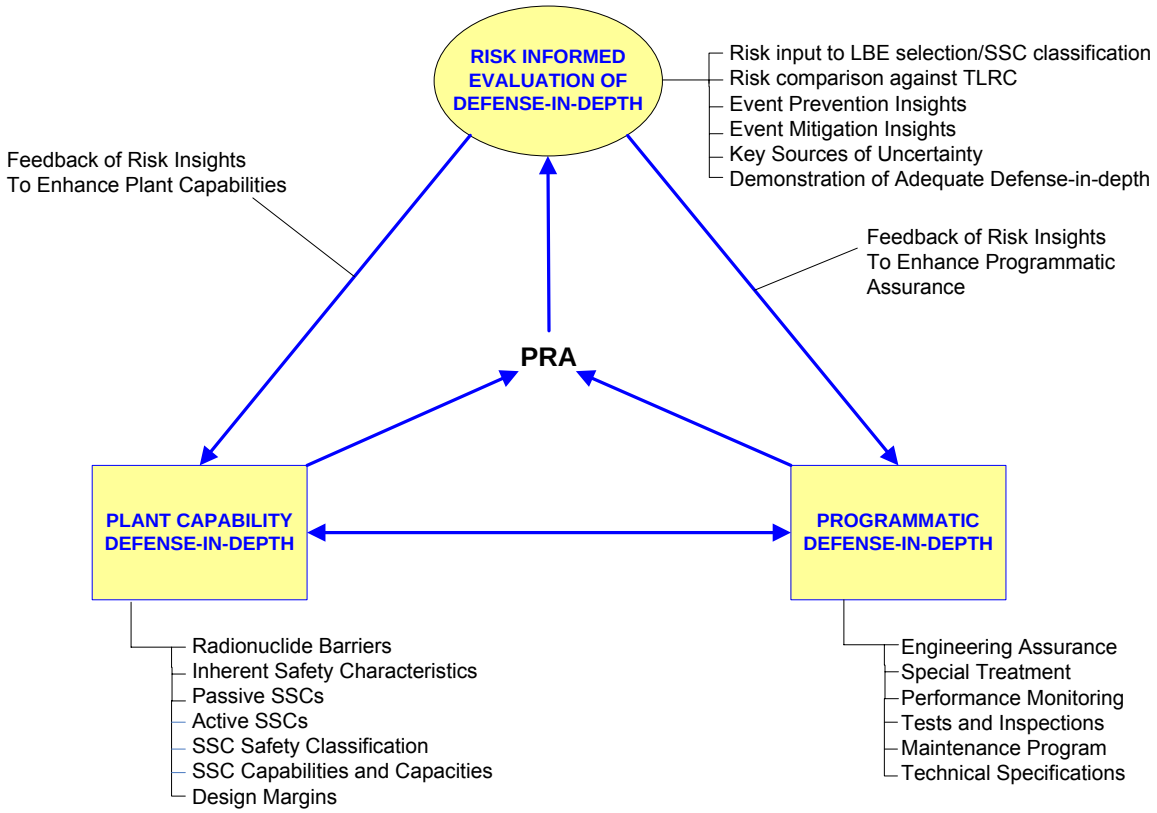

Figure 14.2-1: Approach to Defense-in-Depth

Conservative design approaches that are used to provide Plant Capability Defense-in-Depth include the use of inherent features and passive SSCs as a first line of defense in the performance of safety functions and conservative design margins to improve the capability of SSCs to withstand challenges that may exhibit uncertainties.

Programmatic Defense-in-Depth refers to the use of multiple lines of defense in the programs that are put into place to ensure that SSCs responsible for performing safety functions have adequate reliability and capability, and to provide protection against uncertainties for the life of the plant after the plant has been designed. These programs include the special treatment requirements for safety classified SSCs, tests and inspections, monitoring of plant and SSC performance, maintenance, technical specifications, and oversight.

Risk-Informed Evaluation of Defense-in-Depth refers to the multiple lines of defense reflected in the definition of scenarios that form the basis of the deterministic and probabilistic safety evaluations that will be performed to support the licensing of the plant. The strategies of accident prevention and mitigation are identified and evaluated in this element based on a review of the PRA whose results have been structured to identify the roles of SSCs in the prevention and mitigation of accidents.

Prevention and mitigation are defined with respect to limiting the release of significant amounts of radioactive material as a result of event sequences that could occur in the NGNP. As a result, the strategies of prevention and mitigation are defined more broadly for the NGNP than for currently licensed reactors, which focus on the prevention and mitigation of core damage.

14.2.3 Safety Functions

The NGNP safety design approach is framed in terms of reactor-specific safety functions that are developed from the top goal of containing the inventory of radioactive material and then considering the specific functions that, when satisfied, would protect the integrity of the fuel and other radionuclide transport barriers. The top down logic used to define these functions is shown in Figure 14.2-2. The functions shown with shading are required safety functions meaning that SSCs selected to perform these functions are required to operate to meet the deterministic dose requirements for Design Basis Accidents. The functions shown without shading are not required but are included in the design to provide an element of Plant Capability Defense-in-Depth and to meet user requirements for plant availability and investment protection. The required safety functions include those to:

- Control heat generation (reactivity)
- Control heat removal
- Control chemical attack
- Maintain core and reactor vessel geometry
- Maintain reactor building structural integrity

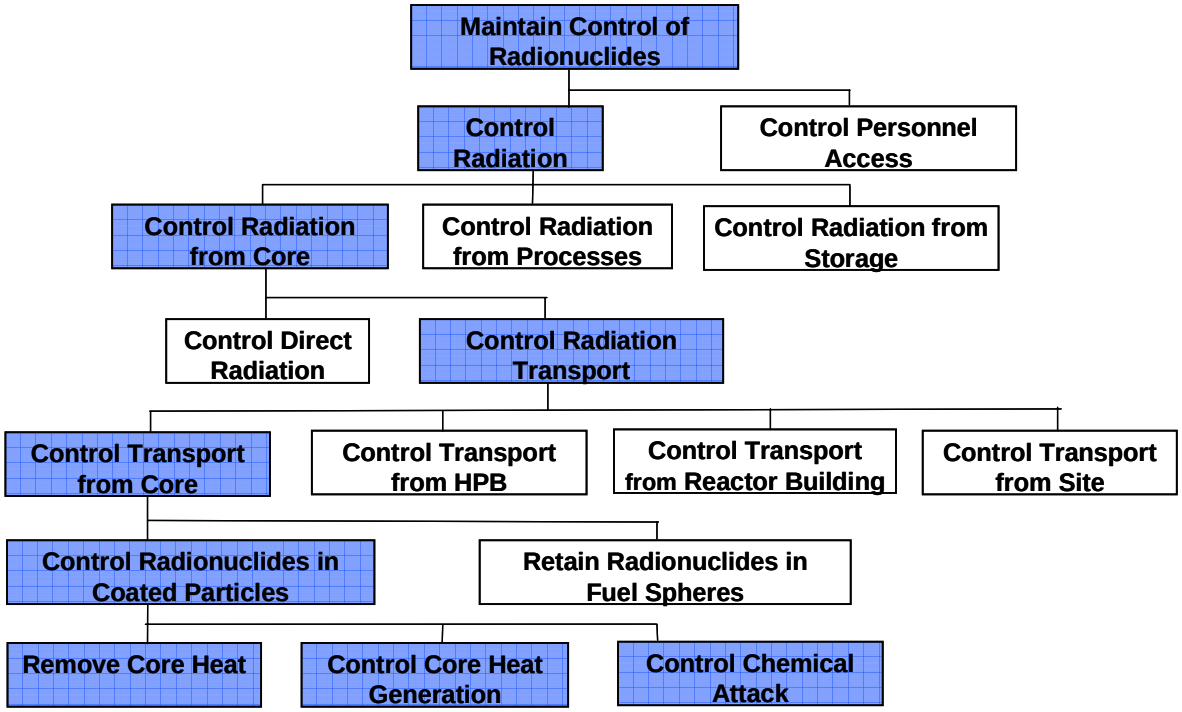

Figure 14.2-2: Safety Function Logic Tree

14.2.4 Selection of Design Features to Perform Safety Functions

The NGNP safety design is based on meeting the following objectives that specifically incorporate the defense-in-depth approach described above:

- Provide safe, economic and reliable nuclear heat to the HPS and the PCS, which produce hydrogen and electricity respectively
- Select compatible fuel, moderator, & coolant with inherent safety characteristics
- Utilize proven technologies to the maximum extent practical
- Design reactor with inherent characteristics and passive safety features sufficient to protect the public as the primary strategy for Plant Capability Defense-in-Depth
- Supplement with active design features and SSCs for investment protection and as a secondary strategy for Plant Capability Defense-in-Depth

Important inherent characteristics of the NGNP design include:

- Ceramic-coated pebble fuel
  - Capability to maintain integrity at high temperatures
  - Chemically compatible with coolant and moderator
- Graphite moderator

  - Capability to maintain integrity at high temperatures
  - High thermal heat capacity
  - Chemically compatible with fuel and coolant
  - Large neutron migration length for neutron stability
- Helium coolant
  - Single phase over all normal and accident conditions
  - Chemically and neutronically inert
  - Low stored thermal energy

In addition to these inherent characteristics, the NGNP has both passive and active design features to perform defense-in-depth functions, as discussed below.

The NGNP safety design approach is to provide inherent characteristics and passive SSCs that are sufficient to protect the public and to meet the Top Level Requirements and to provide the primary strategy for Plant Capability Defense-in-Depth, and then to provide additional active SSCs to provide additional levels of defense-in-depth as well as to meet user requirements for plant availability and investment protection. A summary of the inherent characteristics and passive SSCs that are available to support each required safety function, as well as the additional active SSCs that support these functions is provided in Table 14.2-1.

Table 14.2-1: Safety Design Features and SSCs Providing Plant Capability Defense-in-Depth

Safety Function	Inherent Features and Passive SSCs	Active SSCs[1]
Control of Radionuclides	• Fuel barrier Coated particle barrier Graphite matrix Graphite reflectors and other reactor internal surfaces • Helium Pressure Boundary (HPB) barrier • Reactor building barrier Citadel Confinement functions of reactor building Reactor building Pressure Relief System (PRS) blow-out panels	• PRS dampers • Reactor building Heating, Ventilation and Air-Conditioning (HVAC) filtration system
Control of Heat Generation	• Strong negative temperature coefficient of reactivity • Reduced excess reactivity due to online refuelling • Gravity fall of control rods and Small Absorber Spheres (SAS)	• Control and protection systems Operational Control System (OCS) Equipment Protection System (EPS) Reactor Protection System (RPS) • Reactivity control systems Reactivity Control System (RCS) trip release of control rod drives Reserve Shutdown System (RSS)

[1] Not shown in this table are support systems such as electric power systems, instrument and service air systems, and some of the man-machine interface systems. The design features listed in this table are representative examples. A more complete and up-to-date set of design features will be developed during the Conceptual Design Phase.

Table 14.2-1: Safety Design Features and SSCs Providing Plant Capability Defense-in-Depth

Safety Function	Inherent Features and Passive SSCs	Active SSCs[1]
		release of SAS
Control of Heat Removal	• Large thermal heat capacity • Passive core heat removal • Core size, power density, geometry • Core, un-insulated reactor vessel, and reactor cavity configuration • Passive Reactor Cavity Cooling System (RCCS) RCCS Tank inventory Demineralized Water System (DWS) or Fire Protection System (FPS) makeup to RCCS tanks (two places) RCCS Tank inventory + External tank truck makeup to RCCS tanks (two places) RCCS dry • PRS blow-out panels	• Active Reactor Cavity Cooling System (RCCS) Equipment Protection Cooling Circuit (EPCC) → Main Heat Sink System (MHSS) EPCC → Cooling Tower • Power Conversion Systems Intermediate Heat Exchanger (IHX) Rankine Cycle → Active Cooling System (ACS) → MHSS Turbine Generator (TG) → ACS → MHSS Process Coupling Heat Exchanger (PCHX) • Core Conditioning System (CCS) EPCC → MHSS EPCC → Cooling Tower • Core Barrel Conditioning System (CBCS) EPCC → MHSS EPCC → Cooling Tower
Control of Chemical Attack	• HPB high reliability piping and pressure vessels • HPB design minimize penetrations in top of reactor vessel	• PRS exhaust duct dampers and redundant closure mechanisms limit air ingress • Isolation valves in PHTS interfacing systems • Helium Purification System (HPS) maintains

Table 14.2-1: Safety Design Features and SSCs Providing Plant Capability Defense-in-Depth

Safety Function	Inherent Features and Passive SSCs	Active SSCs[1]
	• High purity specifications for inert helium coolant • All interfacing systems at lower pressure than the Primary Heat Transport System (PHTS) • Lack of HPB pressurization mechanisms to open PRS valves • ACS rupture discs protect against PHTS Heat Exchanger (HX) leaks • PRS relief blow-out panels	high purity levels of helium coolant
Maintain Core and Reactor Vessel Geometry	• Reactor core and structures • Reactor pressure vessel and structures • Reactor cavity citadel • Reactor building structure	• Active RCCS maintains acceptable reactor vessel support temperatures

14.3 RISK-INFORMED PERFORMANCE-BASED SAFETY EVALUATION

In support of the pre-application interactions with the Nuclear Regulatory Commission (NRC), leading to the U.S. design certification of the PBMR, a risk-informed and performance-based approach has been proposed as described more fully in References [14-1] through [14-4]. This proposal is a proactive response to NRC policies on the expanded use of PRA methods to in the licensing process [14-5] as well as its Advanced Reactor Policy [14-6]. This approach builds upon the risk-informed licensing approach that was developed by the Department of Energy (DOE) for the MHTGR in the 1980's and the more recent experience with the Exelon-proposed licensing approach for the PBMR ([14-7] through [14-11]). The approach is also consistent with the basic elements of the Technology-Neutral Framework that is under development by the NRC in support of new plant licensing [14-12].

The key elements of this technology-neutral approach include: (1) the use of accident frequency vs. radiological dose criteria that are derived from current U.S. licensing requirements, referred to as Top Level Regulatory Criteria (TLRC), (2) use of a full-scope PRA to select the LBEs, (3) development of reactor-specific functions, selection of the corresponding safety-related Systems, Structures, and Components (SSCs), and their regulatory design criteria, (4) deterministic design conditions and special treatment requirements for the safety-related SSCs, and (5) a risk informed evaluation of defense-in-depth as described in the previous section. The relationships among these elements are described in Table 14.3-1.

Table 14.3-1: Elements of Risk-Informed, Performance-Based Licensing Approach

Elements of Approach	Purpose
• Top Level Regulatory Criteria (TLRC)	• Establish what level of safety must be achieved in terms of the frequencies and radiological doses of event sequences
• Licensing Basis Events (LBEs)	• Define when and under what conditions the TLRC must be met based on event sequences selected from the PRA
• Required Reactor Specific Safety Functions • Regulatory Design Criteria (RDC) • Safety Classification of SSCs • Plant Capability Defense-in-Depth	• Establish how it will be assured that the TLRC are met
• Design Basis Accident (DBA) Conditions • Special Treatment Requirements • Programmatic Defense-in-Depth	• Provide assurance as to how well the TLRC are met by satisfying deterministic requirements to reduce uncertainties in the probabilistic results

14.3.1 Top Level Regulatory Criteria (TLRC)

The focus of this section is to define criteria that establish limits on the frequencies and the consequences of LBEs and LBE categories that must be considered in the design and operation of a nuclear power plant in order to assure public safety and to assess the adequacy of the performance of SSCs that perform safety functions during these LBEs.

The following primary sources have been identified as containing criteria that establish limits on the risk or consequences of potential radiological releases from nuclear power plants in the U.S.

- Reactor Safety Goal Policy Statement [14-14]: This policy limits public safety risk resulting from nuclear power plant operation. Limits are stated in the form of the maximum allowable risk of immediate death and the risk of delayed mortality from exposure to radiological releases of all types from nuclear power plants.
- 10 CFR Part 20, ‘Standards for Protection against Radiation (Subpart D, Radiation Dose Limits for Individual Members of the Public)’: These criteria limit the dose consequences of releases associated with relatively high frequency events that occur as part of normal plant operations.

- 10 CFR Part 50, Appendix I, 'Numerical Guides for Design Objectives and Limiting Conditions for Operation to Meet the Criterion 'As Low as is Reasonably Achievable' (ALARA) for Radioactive Material in Light-Water-Cooled Nuclear Power Reactor Effluents': This appendix provides explicit limits on doses from planned discharges that meet the NRC's definition of ALARA.
- 40 CFR Part 190, 'Environmental Radiation Protection Standards for Nuclear Power Operations': These standards provide the generally applicable exposure limits for members of the general public from all operations except transportation and disposal or storage of spent fuel associated with the generation of electrical power by nuclear power plants.
- 10 CFR Part 100, 'Reactor Site Criteria (Subpart B, Evaluation Factors for Stationary Power Reactor Site Applications on or After January 10, 1997)': §100.20 defines the Exclusion Area Boundary (EAB) and Low Population Zones of a nuclear reactor site, and requires that the combination of the site and reactor located on that site be capable of meeting the dose and dose rate limitations set forth in 10 CFR §50.34(a).
- 10 CFR §50.34(a)(ii)(D), 'Contents of Applications: Technical Information (Radiological Dose Consequences)': This section of the regulation specifies dose limits for evaluating the acceptance of the engineered safety features that are intended to mitigate the radiological consequences of accidents. These dose limits are consistent with those utilized in 10 CFR Part 100 for determining the extent of the EAB and Emergency Planning Zone (EPZ).

Frequency consequence criteria from these guidelines are used to establish the TLRC for judging the acceptability of the frequency and consequence of each Licensing Basis Event (LBE) as shown in Figure 14.3-1 with examples of LBEs derived from a PBMR PRA for an earlier version of the current design[2].

[2] Additional discussion on the derivation of this figure is provided in Special Studies section 20.6.6.2.2 and in reference. 14-2.

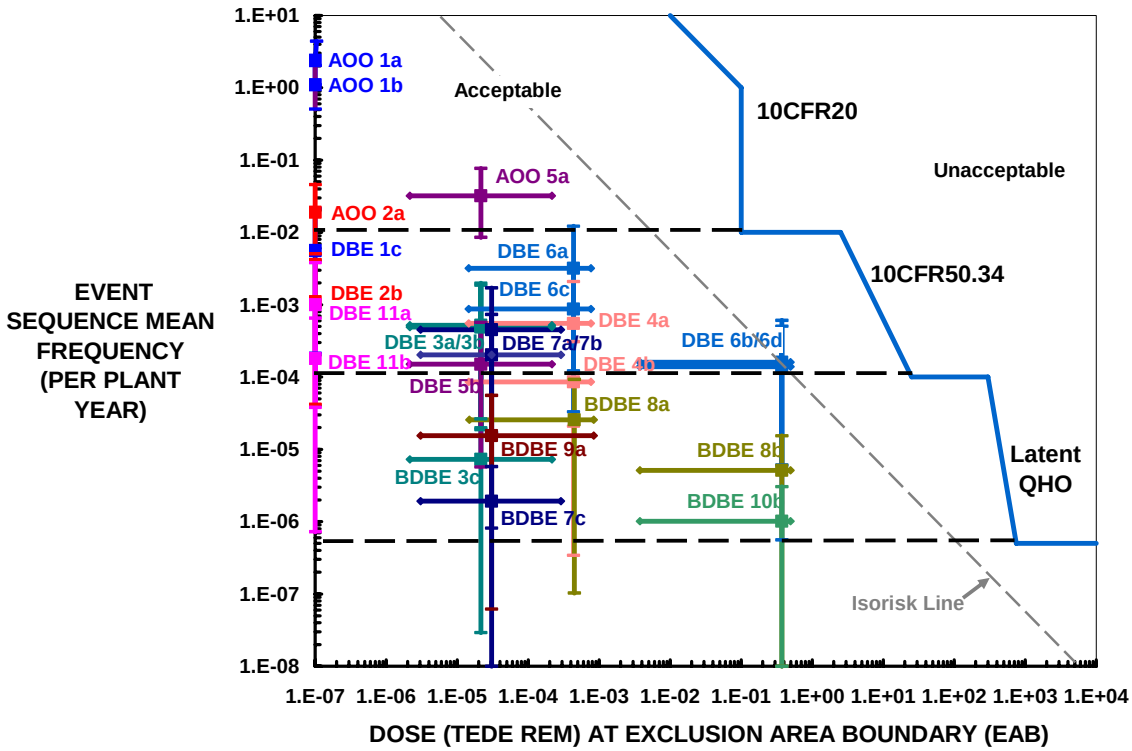

Figure 14.3-1: Frequency-Consequence Chart Showing TLRC and Three Categories of Licensing Basis Events AOOs, DBEs, and BDBEs

The consequence limits in the risk criteria from the previous subsection are assigned to the associated frequency regions to establish the basis for applicability within this licensing approach. The assignment of frequency regions is performed in a manner consistent with the experience of the MHTGR and PBMR licensing submittals and consists of a spectrum of releases covering a frequency range from normal operation to very low probability off-normal events. The spectrum of potential accidental radioactive releases from a plant is divided into three regions of a scenario frequency versus consequence chart. The regions include those associated with:

- Anticipated Operational Occurrences (AOOs) – Event Sequence Frequencies $>10^{-2}$ per plant year
- Design Basis Events (DBEs) – Event Sequence Frequencies between 10^{-2} and 10^{-4} per plant year
- Beyond Design Basis Events (BDBEs) – Event Sequence Frequencies $<10^{-4}$ per plant year

An examination of the entire frequency range and the identification of one or more of the TLRC as being applicable for each region provide assurance that the selected criteria are adequately established. By expressing the event sequence frequencies on a per plant year where a

plant can be a multi-module facility providing both electric generation and hydrogen production, the integrated risk of the entire plant can be assessed and the risk of accidents involving single and multiple modules can be suitably investigated and accounted for.

14.3.2 Use of PRA To Select Licensing Basis Events

The use of PRA in the licensing approach builds upon the approaches for the MHTGR and PBMR that have been reviewed in pre-application interactions by the NRC. A full scope PRA of the PBMR Demonstration Power Plant is underway. For the NGNP, the first phase of the PRA will performed as part of the conceptual design and this PRA will be updated for each successive design, construction, and operational phase. The PBMR PRA approach is described in Reference [14-1] and the highlights of this approach are summarized below.

PRA provides a logical and structured method to evaluate the overall safety characteristics of HTGR plants. This is accomplished by systematically enumerating a sufficiently complete set of accident scenarios and by assessing the frequencies and consequences of the scenarios individually and in the aggregate to predict the overall risk profile. It is the best available safety analysis method that captures the dependencies and interactions among SSC, human operators and the internal and external plant hazards that may perturb the operation of the plant. The quantification of both frequencies and consequences must address uncertainties because it is understood that the calculation of risk is affected by uncertainties, especially those associated with the potential occurrence of rare events. The treatment of uncertainties is especially important in this application because of the relative lack of relevant operating experience with HTGRs as well as the lack of experience in the performance and review of HTGR safety analyses. The quantification of frequencies and consequences of event sequences and the associated quantification of uncertainties provide an objective means of comparing the likelihood and consequence of different scenarios and of comparing the assessed level of safety against the TLRC.

The first step in the development of the PRA is the identification of all the sources of radioactive material, the barriers that protect these sources from release, and all the operating and shutdown modes that need to be considered. In the second step, the SSCs that are provided to perform safety functions which serve to protect the barriers are identified. This includes SSCs whose sole purpose is to perform a safety function as well as other SSCs whose operation serves to prevent an accident or fulfill a safety function as a secondary purpose. The identified safety functions which provide a basis for the definition of the event sequences include:

- Control heat generation (reactivity)
- Control heat removal
- Control chemical attack
  - Maintain HPB integrity
  - Limit sources of air and water
- Maintain core and reactor vessel geometry

- Maintain reactor building structural integrity

To support the application to define LBEs, it is necessary to apply this process to all sources of radioactive material that need to be licensed including the reactor core, spent fuel storage, and sources in the helium services system.

The scope of the PRA needed to support this risk-informed approach to licensing will be as comprehensive and sufficiently complete as would be covered in a full-scope, all modes, Level 3 PRA covering a full set of LWR internal and external events. However, due to the inherent features of the NGNP design, the approach to modeling initiating events and event sequences is simplified in comparison to an LWR PRA model. Some of key differences between the PBMR PRA and a PRA for an LWR are identified in Table 14.3-2.

Table 14.3-2: Comparison of PBMR and LWR PRA Scope and Structure

PRA Model Attributes	PRA Outputs	LWR			PBMR
		Level 1	Level 2	Level 3	
Assessment of Accident Frequencies	Core Damage Frequency (CDF)	Yes	Yes	Yes	No
	Plant Damage State (PDS) Frequencies	Not necessary but are sometimes included	Yes, all PDSs are variations of LWR core damage state	Yes, all PDSs are variations of LWR core damage state	Yes, PBMR plant states defined as event sequence families for LBEs
	Release Category Frequencies	No	Yes, all involve core damage and are LWR specific	Yes, all involve core damage and are LWR specific	Yes, PBMR-specific release categories
	Frequencies of site meteorological conditions and Emergency Planning (EP) responses	No	No	Yes	Yes, but conservative deterministic bounding treatment may be sufficient to meet DCA requirements
Assessment of Accident Consequences	Source Terms	No	Yes, Mechanistic Source Terms for each LWR release category quantified	Yes, Mechanistic Source Terms for each LWR release category quantified	Yes, Mechanistic Source Terms for each PBMR release category quantified
	Consequences to the Public		No	Yes, early and latent health effects, property damage impacts quantified	Yes, like LWR Level 3, but conservative bounding treatment may be sufficient to meet DCA requirements

Selection of preliminary LBEs for the PBMR Demonstration Power Plant has been performed and submitted to the NRC to illustrate the approach [14-2]. These preliminary sets of LBEs have been limited to initiating events occurring with the reactor operating at full power. As the design process proceeds, the scope of the PRA is updated and progressively expanded to include additional operating states and external events as further details of design, operation, and maintenance are completed.

The design process is iterative in that a conceptual design concept was selected with assumed safety functions and SSCs to perform them. The use of the PRA for the LBE selection discussed in subsequent sections provides insights into

- Whether the conceptual design meets the TLRC
- Whether the assumed safety functions are needed and/or if others are required, and
- Which sets of equipment are available to perform the safety functions.

Design iterations may be required to feed these insights back into the process and then into the PRA and the LBE selection. Design iterations may also be required for the succeeding elements of the design approach identified in Table 14.3-1.

14.3.3 Approach to Safety Classification and Special Treatment

The PBMR risk-informed and performance-based licensing approach includes three categories of safety classification for SSCs [4]. These include:

Safety-Related SSCs:

- This category is for SSCs relied on to perform required safety functions to mitigate the public consequences of Design Basis Events (DBEs) to comply with the dose limits of 10 CFR §50.34
- This category is also for SSCs relied on to perform required safety functions to prevent the frequency of Beyond Design Basis Accidents (BDBEs) with consequences greater than the 10 CFR §50.34 dose limits from increasing into the DBE region.

Non-Safety-Related with Special Treatment:

- This category is for SSCs relied on to perform safety functions to mitigate the consequences of Anticipated Operational Occurrences (AOOs) to comply with the offsite dose limits of 10 CFR Part 20
- This category is also for SSCs relied on to perform safety functions to prevent the frequency of DBEs with consequences greater than the 10 CFR Part 20 offsite dose limits from increasing into the AOO region.

Non-Safety-Related with No Special Treatment

- This category is for all SSCs not included in either of the above two categories

The definition of these categories and the extent of special treatment that needs to be applied to the SSCs in each category are based on the following model of the role that an SSC plays in the prevention and mitigation of an event or accident. This model is depicted in Figure 14.3-2.

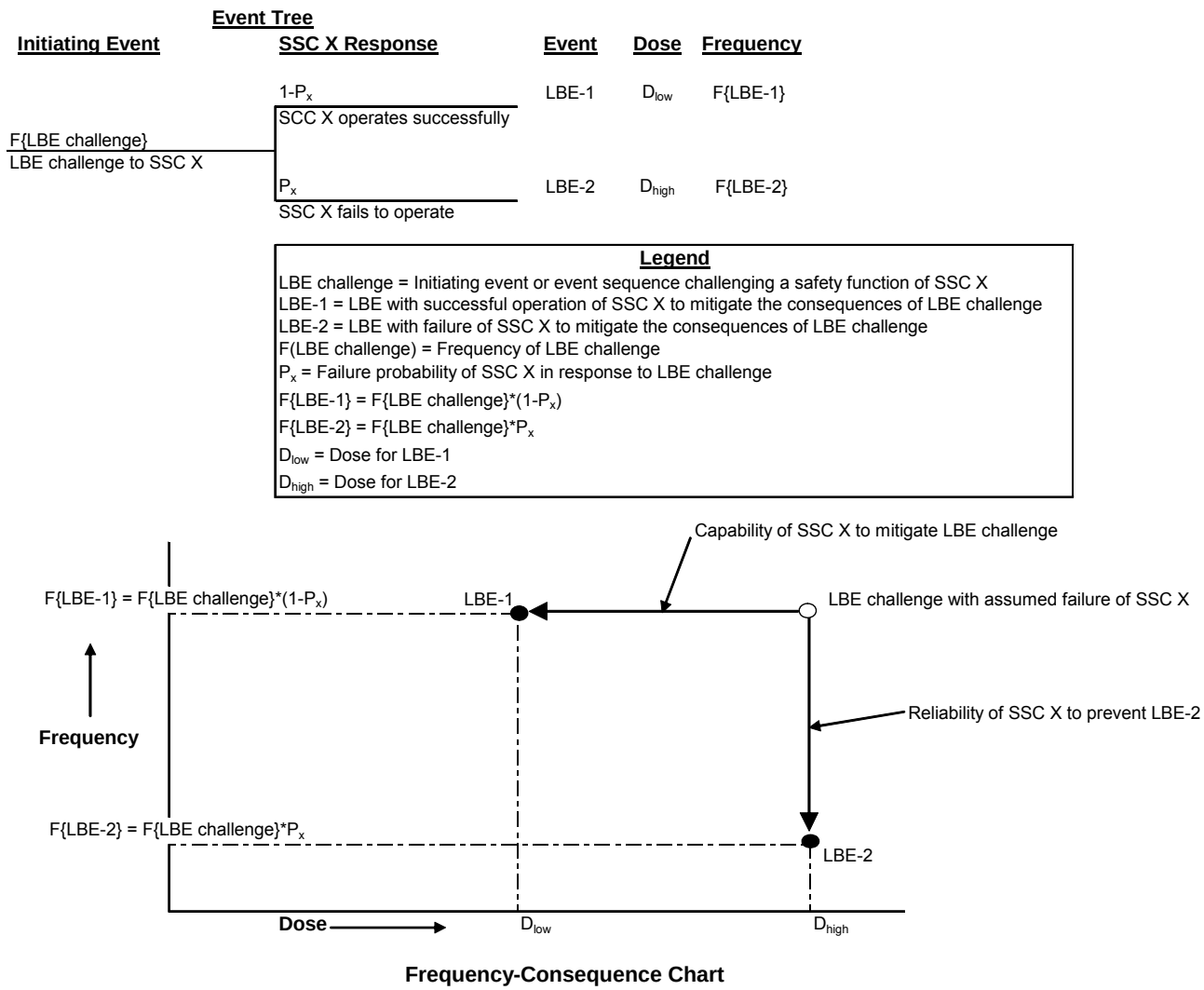

Figure 14.3-2: Simple Model of an SSC in Prevention and Mitigation of an LBE Challenge

The model starts with an event that challenges the capability of an SSC to perform its safety function. The event is denoted as "LBE Challenge." The simplified event tree at the top of this figure shows the relationship between two LBEs. LBE-1 is the LBE in which SSC X successfully performs its safety function in response to the "LBE challenge" event. The LBE challenge event could be an initiating event, a precursor to an initiating event, or some combination of an initiating event and successful and/or failure response of other SSCs in response to an initiating event or precursor. In LBE-2 the event tree sequence is that in which SSC X fails, according to some failure probability of that SSC which is determined in the PRA. The capability of SSC X to mitigate the consequences of the LBE challenge is measured by the differences in doses between LBE-1 and LBE-2. The reliability of the SSC in the performance of its safety function along LBE-1 is measured by the SSC failure probability which is the difference in frequency between LBE-1 and LBE-2. Given the safety classification, an appropriate level of special treatment is specified to ensure that SSC X has the capability for

mitigation and reliability for prevention that are sufficient so that LBE-1 and LBE-2 are within their respective TLRC.

The three categories of safety classes defined above are defined in the context of how the frequencies and doses of the LBEs are controlled by the capabilities and reliabilities of the SSCs in relation to the TLRC. SSCs may participate in LBEs in one or more of the regions of the TLRC frequency-consequence chart.

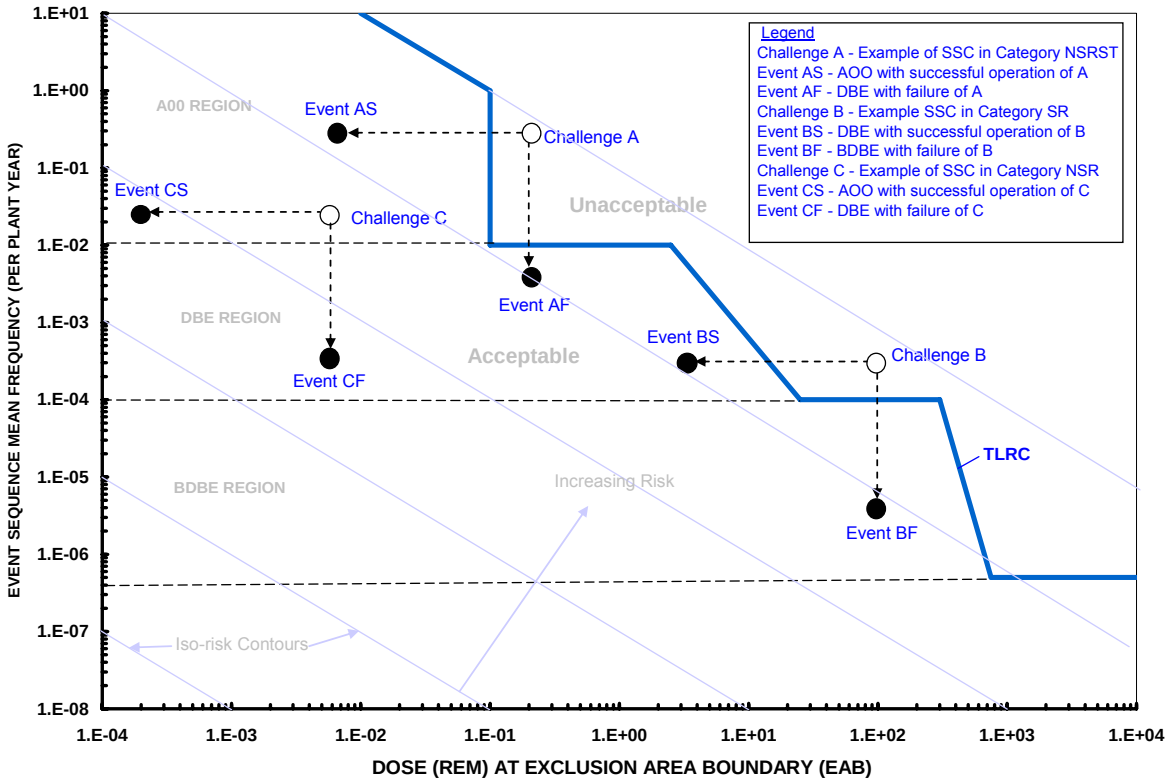

Figure 14.3-3: Impact of Safety Classified SSCs in Prevention and Mitigation of LBEs

This participation includes those LBEs in which the SSC performance mitigates the consequences of the challenge as well as those in which its reliability helps to reduce the LBE frequency and higher consequences LBEs. Generic LBE examples from all three SSC safety classification categories, safety related, non-safety-related with special treatment, and non-safety-related, are shown in Figure 14.3-3. SSC A is an example of an SSC whose successful performance is necessary to mitigate the consequences of an AOO and to prevent a corresponding DBE whose consequences exceed the AOO dose criteria embodied in the TLRC. Special treatment applied to this category of SSC helps to control the corresponding LBEs (AS and AF) within their respective LBE categories. An assumed degradation in performance of component A with respect to its mitigation capability would result in the frequency and dose of event AS approaching that of challenge A. An assumed degradation in the reliability of this SSC

would also result in the frequency and dose of event AF approaching that of challenge A. In the extreme case of degradation, both events would track to challenge A.

By varying the LBE frequency along the path from point AF to challenge A, one may simulate degradation of the SSC in comparison to what was predicted in the PRA, or one may investigate the impact of uncertainties in the assumed reliabilities of the SSCs. Hence, special treatment measures (e.g. leak before break measures) may not only change the locations of the LBEs on the frequency-dose plot, but also may reduce the uncertainty on the associated frequencies and doses.

SSC B shows a similar behavior through the relationships among events BS, BF, and challenge B for the safety related. SSC B is classified as safety-related because its mitigation capability is necessary to keep the doses of DBEs within the limits specified in 10 CFR §50.34, and its reliability is necessary to prevent the high consequence BDBE from moving into the DBE region where its consequences would be unacceptable.

SSC C is an example of an SSC that is classified as non-safety-related because its corresponding LBEs are within the TLRC even when severe degradation of its performance is assumed. This is an important model as it shows how the practice of defining frequency and dose criteria for evaluating the results of a PRA can be translated into reliability and capability requirements of the SSCs in each of the safety classification categories.

This example helps to demonstrate how the frequencies and doses of the LBEs are controlled by the capabilities and reliabilities of the SSCs in relation to the TLRC.

14.4 SAFETY EVALUATION OF HYDROGEN PRODUCTION FACILITY

14.4.1 Background on Safety Evaluation of Hydrogen Production

Previous investigations into the safety aspects of the use of nuclear heat sources in the production of hydrogen include the following:

- A PRA-style evaluation of the separation distances between a Generation IV VHTR and a hydrogen production facility [14-15]
- A study of hydrogen explosions and prediction of blast waves from various deflagration phenomena which addresses hydrogen issues for currently U.S. licensed LWRs [14-16]. This work is used as input to the previous reference.
- A PRA-style evaluation of core damage accidents caused by events associated with hydrogen storage and cooling systems used in commercial LWR power plants. [14-17]
- An analytical study of fires and explosions that were postulated for a Japanese HTGR that was designed for hydrogen production [14-18]
- A delineation of safety issues associated with use of hydrogen as a vehicle fuel [14-19]
- Two U.S. NRC Regulatory Guides, one (RG 1.91) dealing with evaluation of explosions from transportation routes and process plants near a commercial nuclear power plant [14-20], and the other (RG 1.78) dealing with control room habitability due to hazardous chemical releases near a nuclear plant [14-21].

The second reference listed above provides an excellent summary of the properties of hydrogen combustion that need to be considered in the hazards evaluation for the HPF.

A review of the Japanese HTGR study cited above [14-18] yields the following insights for the HPS safety evaluation: These include:

- The potential exists for deflagration and detonation blast waves from vapor clouds resulting from hydrogen or methane systems.
- There is potential for damage from blast waves reflected off of safety related structures as well as the incident waves.
- Hazardous chemical releases can be postulated and associated fires that could produce toxic exposures to human operators and plant workers, depending on the details of the hydrogen production process.
- Process leaks need to be considered that move combustible and hazardous materials into various process and reactor piping systems and facilities.

The analysis tools used in this study (PHOENICS, AutoReaGas, AUTODYN) might be useful to support the design and siting proximity of the hydrogen production for the NGNP.

14.4.2 Approach to Treatment of Hydrogen Production Facility Hazards

The approach to the treatment of hazards associated with the HPF in the risk-informed performance-based safety evaluation of the NGNP is comprised of the following elements.

- Performance of a Process Hazards Assessment to support the design of the HPF which includes the Hydrogen Production System (HPS) and buildings
- Preliminary screening evaluation of event sequences associated with HPS process hazards
- Detailed risk analysis of event sequences associated with HPS process hazards and the impact of HPF operations on the NHSS

As explained more fully in Section 7, Occupational Safety and Health Administration (OSHA) regulation 29 CFR §1910.119(e) requires that the owner of the chemical plant containing sufficient quantities of hazardous materials perform a Process Hazard Assessment (PHA). The extent, methodology and detail of this assessment depend upon the complexity of the process. In the design of a new facility of this kind, this PHA is generally carried out in stages. A brief assessment of hazards including a review of the Material Safety Data Sheets (MSDS) and the Process Flow Diagrams (PFDs) is performed during conceptual design. When Piping and Instrumentation Diagrams (P&IDs) are available, usually near the end of preliminary design, a "What-if," "checklist," or Hazard and Operability Study (HAZOPS) PHA is performed. For selected systems a Failure Mode and Effects Analysis (FMEA), or a fault-tree analysis may be performed. A final HAZOPS is frequently performed before startup. Due to the overlap in functions between the design support and safety assessment, the PHA will be integrated into the overall NGNP safety evaluation.

For the next phase of the evaluation, the process hazards will be included within the scope of the PRA. This means that initiating events and event sequences caused by or influenced by the HPF and associated process hazards will be identified and analyzed with the context of the integrated full scope assessment. The first step in the PRA process is the development of a comprehensive set of initiating events that could challenge one or more barriers or the SSCs that support the safety functions aimed at protecting the integrity of these barriers. The logic process for identifying initiating events is illustrated in the Master Logic Diagram of Figure 14.4-1, [14-1]. This process has been designed to cover the full spectrum of initiating events including internal plant hardware failures and human error induced events, hazards internal to the plant such as fires, floods, and missiles from rotating equipment, and hazards external to the plant including seismic events, transportation accidents, and hazards in the HPF and other nearby industrial facilities. The parts of this diagram that are relevant to the safety evaluation of HPF hazards are those associated with the external events analysis. The logic diagram in this figure is used to help screen out scenarios with insignificant risk impact. Only when events are unable to be screened out using conservative assumptions are events retrained for more detailed risk analysis.

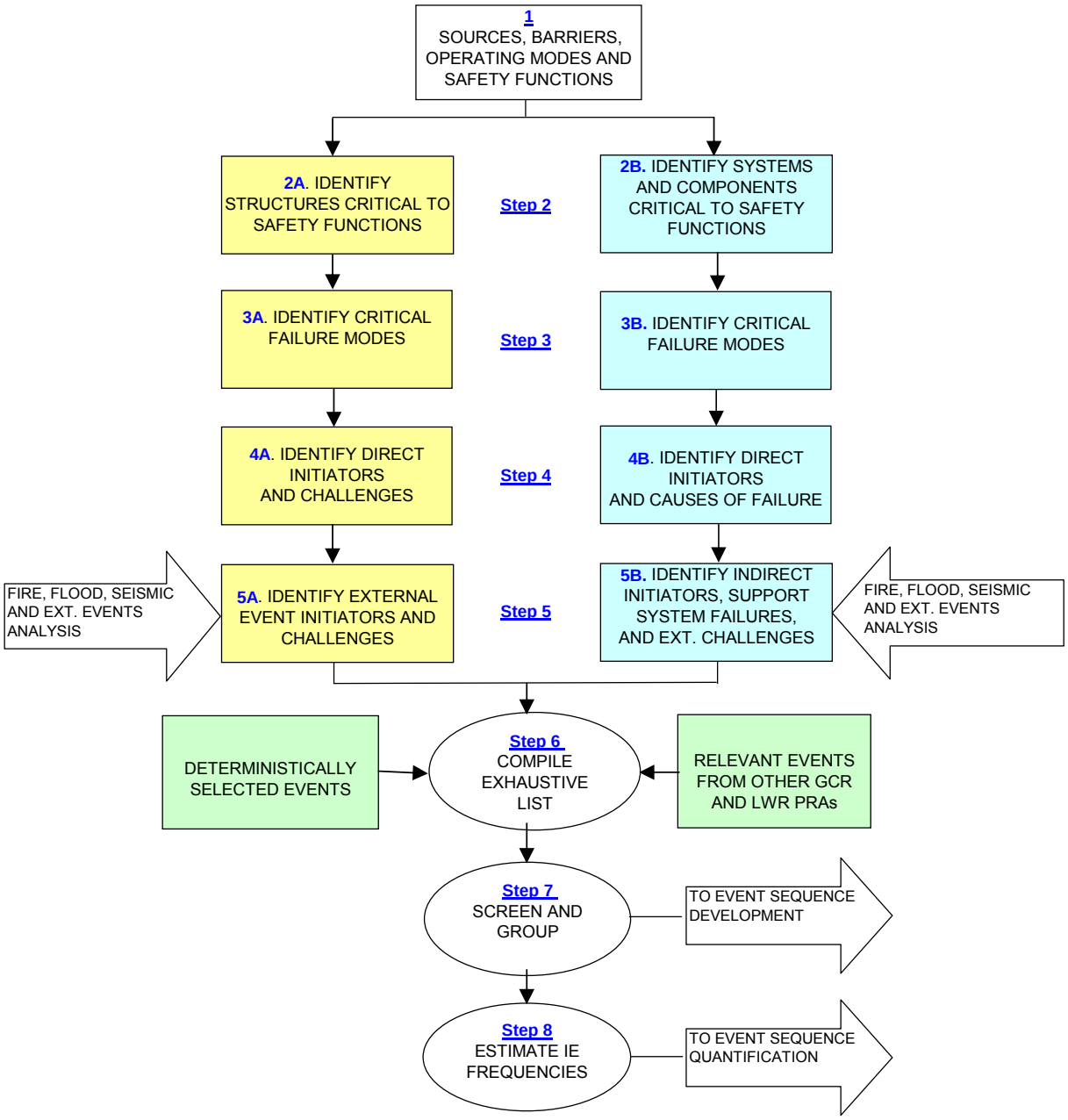

Figure 14.4-1: Master Logic Diagram for Initiating Event Analysis

14.4.3 Development of Event Sequences Associated with HPF Hazards

The types of scenarios that need to be considered in the definition of LBEs involving hydrogen production include:

Type 1

Fires, deflagration explosions, and detonation explosions that could occur at or near the HPF sending heat and blast waves that could challenge the nuclear plant SSCs supporting safety functions, or render the control room or reactor building areas inhabitable. These could occur from releases of hydrogen or source material used for the production of hydrogen such as methane, propane, LNG, etc. depending on the process that is used. The results of the Process Hazards Assessment and review of the HPF design will help focus the scenario development on those relevant to the design. Any scenario class might be screened out for a particular hydrogen production process.

Type 2

Vapor clouds that could produce fuel air mixtures (hydrogen or methane or other combustible material) that could drift toward the nuclear plant and associated SSCs supporting safety functions and ignite near or above the reactor building. Even vapor clouds at significant elevations above the facility can produce blast waves that can impact the facility.

Type 3

Hazardous chemical releases from the HPF that could be toxic to reactor operators in the control room or near the reactor facilities. Such releases could have adverse impacts on the capability of the plant operators to safely operate or shutdown the facility.

Type 4

Propagation of hazardous materials, either combustible or toxic or both, from the production facility, to the reactor building via leaks in the secondary and tertiary systems. The potential for such scenarios may be highly dependent on the modes and states of the reactor and plant.

Note that the definition of scenarios must consider all possible initial conditions characterized by the modes and states of the NHSS, the HPF and the other NGNP facilities.

In order for any of the above scenarios to result in a release of radioactive material from the plant, the scenario must involve a challenge to one or more of the barriers and safety function of the plant. This aspect of the scenario development involves the development of event sequence diagrams, event trees, and fault trees as explained more fully in Reference [14-1].

The results of the safety evaluation of the HPF hazards will be reflected in the definition of LBEs, which in turn may impact the design requirements for NGNP SSCs, including the safety classification of SSCs, and the capabilities and reliabilities to prevent HPF hazards from challenging the safe operation of the plant.

14.5 COMPLEXITIES, RISKS, AND FUTURE STUDIES

14.5.1 Complexity and Risks

There are several complexities and risks which must be addressed during the conceptual design and subsequent licensing phases. These include:

- Limited experience with licensing non-LWR power plants. Most of the licensing experience with nuclear power is associated with LWR technology. There are risks associated with gaining NRC acceptance with the safety design approach and all aspects of the safety analysis. Such risks are common to both electric generation and hydrogen production reactors. Having said this, these risks will be more easily managed with a risk-informed performance-based licensing approach, compared with a deterministic approach based on LWR precedents. Additional discussion on the use of a risk-informed performance-based licensing approach is provided in PCDR Section 17 'Licensing and Permitting'.
- Limited experience with licensing non-electric power plants. There has been some experience with licensing nuclear power plants that provide process heat as well as electric power. The Midland nuclear generating station near Midland, Michigan, which was never completed, was originally designed to produce electric power and process heat for a nearby major process facility operated by Dow Chemical company. The Preliminary Safety Analysis Report stage was completed but the plant was cancelled prior to the Operating License stage. A full scope PRA that included the chemical process hazards was performed to help license that facility. Several currently licensed nuclear plants are located close to chemical and process facilities including Waterford and South Texas. In addition, NRC licensing of existing plants addresses on-site chemical hazards including hydrogen which is often used in the generator cooling systems. While there have been several major hydrogen explosions at these plants, including one at Shippingport near the end of the light water reactor breeder program, these events had no significant impact on overall plant safety.
- Limited experience with PRA involving combustible material facilities. Experience with realistic probabilistic analysis of hydrogen combustion phenomena is lacking. LWR Level 2 PRAs consider this in the modeling of severe accident phenomena but the number of personnel with experience in this area is lacking. Uncertainties in predicting whether and when combustible gas mixtures will form and ignite are important to capture in a competent probabilistic evaluation of hazards.

During the conceptual design of the NGNP, the above issues will be specifically addressed in the successful completion of the safety evaluation.

14.5.2 Future Studies

- During the conceptual design phase, a full scope PRA that addresses all internal and external hazards, including those associated with the HPF, will be developed.
- During the conceptual design of the NGNP, a Process Hazards Assessment (PHA) for the Hydrogen Production Facility (HPF) will be initiated in accordance with Occupational Safety and Health Administration (OSHA) requirements. This preliminary PHA will help establish the specific safety design requirements and criteria for safe operation of the NGNP.

REFERENCES

[14-1] PBMR (Pty) Ltd., 'U.S. Design Certification – Probabilistic Risk Assessment Approach for the Pebble Bed Modular Reactor,' June 13, 2006.

[14-2] PBMR (Pty) Ltd., 'U.S. Design Certification – Licensing Basis Event Selection for the Pebble Bed Modular Reactor,' June 30, 2006.

[14-3] PBMR (Pty) Ltd., 'U.S. Design Certification – Safety Classification of Structures, Systems, and Components for the Pebble Bed Modular Reactor,' June 30, 2006.

[14-4] PBMR (Pty) Ltd., 'U.S. Design Certification – Defense-in-Depth Approach for the Pebble Bed Modular Reactor,' August, 2006.

[14-5] U.S. Nuclear Regulatory Commission, 'Use of Probabilistic Risk Assessment Methods in Nuclear Regulatory Activities; Final Policy Statement,' Federal Register, Vol. 60, No. 158, pg. 42622-42629, August 16, 1995.

[14-6] U.S. Nuclear Regulatory Commission, 'Regulation of Advanced Nuclear Power Plants; Statement of Policy,' Federal Register, Vol. 51, No. 130, pg. 24643-14648, July 8, 1986.

[14-7] U.S. Department of Energy, "Preliminary Safety Information Document for the Standard Modular High Temperature Gas-Cooled Reactor," DOE-HTGR-86-024, Amendment 13, August, 1992.

[14-8] U.S. Department of Energy, "Probabilistic Risk Assessment for the Standard Modular High Temperature Gas-Cooled Reactor," Department of Energy, DOE-HTGR-86011, Revision 5, April 1988.

[14-9] Exelon Generation Company, "Proposed Licensing Approach for the Pebble Bed Modular Reactor in the United States," submittal to U.S. NRC, March 2002.

[14-10] U.S. Nuclear Regulatory Commission, "Draft Preapplication Safety Evaluation Report for the Modular High Temperature Gas-Cooled Reactor," NUREG-1338, March 1989.

[14-11] U.S. Nuclear Regulatory Commission, "NRC Staff's Preliminary Findings Regarding Exelon Generation's (Exelon's) Proposed Licensing Approach For The Pebble Bed Modular Reactor (PBMR)", March 26, 2002.

[14-12] U.S. Nuclear Regulatory Commission, "Regulatory Structure for New Plant Licensing, Part 1: Technology-Neutral Framework," NUREG in development.

[14-13] U.S. Department of Energy, "Top-Level Regulatory Criteria for the Standard Modular High Temperature Gas-Cooled Reactor," Department of Energy, DOE-HTGR-85002, Revision 3, September 1989.

[14-14] U.S. Nuclear Regulatory Commission, "Safety Goals for the Operation of Nuclear Power Plants," Policy Statement, Federal Register, Vol. 51, No. 149, pp.28044-28049, August 4, 1986.

[14-15] Curtis Smith, Scott Beck, Bill Galyean, "An Engineering Analysis For Separation Requirements Of A Hydrogen Production Plant And High-Temperature Nuclear Reactor," INL/EXT-05-00137 Rev 0, March 2005

[14-16] INEL, "Improved Estimates Of Separation Distances To Prevent Unacceptable Damage To Nuclear Power Plant Structures From Hydrogen Detonation For Gaseous Hydrogen Storage," EGG-SSRE-9747, May 1994

[14-17] G.P. Simion, et al, "Risk Analysis of Highly Combustible Gas Storage, Supply, and Distribution Systems in PWR Plants," NUREG/CR-5759, June 1993

[14-18] Yoshitomo Inaba, T. Nishihara, and Y. Nitta, "Analytical Study on Fire and Explosion Accidents Assumed in HTGR Hydrogen Production Systems," Nuclear Technology, Vol. 146, April 2004

[14-19] L. C. Cadwallader and J. S. Herring, "Safety Issues with Hydrogen as a Vehicle Fuel," INEEL/EXT-99-00522, September 1999

[14-20] U.S. Nuclear Regulatory Commission, Regulatory Guide 1.91, "Evaluation of Explosions Postulated to Occur on Transportation Routes near Nuclear Power Plants," Revision 1, February 1978.

[14-21] U.S. Nuclear Regulatory Commission, Regulatory Guide 1.78, "Evaluating the Habitability of a Nuclear Power Plant Control Room during a Postulated Hazardous Chemical Release," June 1974.

LIST OF ASSUMPTIONS

The key assumptions related to Section 14: Safety are:

14.1 The regulatory requirements under which reactor plant safety will be assessed are those identified in 10 CFR Parts 50 and 52. (Background and discussion on developing a Licensing Review Basis (LRB) to document agreements on the safety review process is described in PCDR Section 17.4.1.2.)

14.2 Agreement on the safety design approach and review criteria will be achieved in a timely manner through successful completion of pre-application interactions on NRC licensing with the PBMR commercial license pre-application. (PCDR Section 17.5, Technical Issues Strategy, describes this pre-application effort in more detail and discusses its inter-relationship with industry programs.)

APPENDICES

APPENDIX 14A DEFINITIONS

Anticipated Operational Occurrences (AOOs) – events or ***event sequences*** that are expected to occur in the life of the plant and normally include events and ***event sequences*** with frequencies greater than once per plant lifetime or approximately .01 per plant year. ***AOOs*** are one type of ***Licensing Basis Event***.

accident sequence – an ***event sequence*** having adverse consequences to public or worker health and safety, e.g. significant radiological doses or health effects to the offsite public or on-site workers.

availability – performance attribute of the plant or of an ***SSC*** defined as the **probability** or fraction of time that the ***SSC*** is capable of performing its function when called upon at the time of demand; the complement of ***unavailability***

best estimate – the point estimate of a parameter that is not biased by conservatism or optimism. Generally, the best estimate of a parameter is represented as a mean value of the underlying uncertainty distribution for the parameter.

chemical attack – the occurrence of, or condition in which, oxidation of core and graphite components resulting from air or water ingress to the primary heat transport system due to failures or openings in the Helium Pressure Boundary

deflagration – represents the propagation of a combustion event by means of thermal phenomenon. The fuel surrounding the ignition site is heated such that it combusts, thereby transferring the reaction from the combusted to uncombusted fuel.

Design Basis Events (DBEs) – events and ***event sequences*** that are less likely than ***AOOs*** but are sufficiently likely that they may occur in the life of a large fleet of plants and have frequencies that are typically in the range of $1x10^{-4}$ to .01 per plant year. ***DBEs*** are used to determine safety classification of **SSC**s for ***required safety functions*** and to define requirements for ***deterministic safety analyses***. ***DBEs*** are one type of ***Licensing Basis Event***.

deterministic safety analysis – safety analysis that is performed in conjunction with well-defined acceptance criteria that include a set of pass or fail rules, normally performed using computer programs that simulate mechanistic physical processes, transient and accident conditions, and other factors that describe the consequences of assumed ***event sequences***.

detonation – represents the propagation of an explosion event by means of shock pressure forces. The reaction is transferred rapidly from exploded to unexploded fuel by way of the shock wave.

diversity – a design feature in which two or more redundant ***SSCs*** are provided to perform an identified function, where the different ***SSCs*** have different attributes such as ***failure modes*** and susceptibility to ***failure mechanisms*** in order to reduce the likelihood of ***common cause failures***
end state – the set of conditions at the end of an ***event sequence*** that characterizes the impact of the sequence on the plant or the environment. End states may be broadly grouped into those with ***safe stable end states*** and those with adverse impacts on plant equipment, personnel or the environment which are classified as accidents (i.e., the sequences that lead to these end states are regarded as ***accident sequences***.

end state, safe stable – an ***end state*** in which plant conditions have stabilized within the ***success criteria*** for all ***safety functions***.

event frequency – the expected number of occurrences of an event such as an ***initiating event*** or ***event sequence*** per unit of time, normally expressed in events per plant (or reactor) operating year or events per plant (or reactor) calendar year.

event sequence – a representation of a plant transient in terms of an ***initiating event*** followed by a combination of system, function and operator failures or successes, with a specified ***end state***. An ***event sequence*** may contain many unique variations of events (***minimal cut sets***) that are similar in terms of how they impact the performance of ***safety functions***. For example, in a sequence in which there is a failure of the forced circulation function, there could be many unique cutsets involving failures of electrical buses, circulators, power supplies, etc., all of which lead to a loss of the forced circulation function after a particular **initiating event**.

explosion – an event that results in a rapid release of energy. Explosions are typically associated with detonation events.

external event – an event originating external to a nuclear power plant that could cause an ***initiating event***, and/or failure of **SSC**s, operator errors, or both that in turn may lead to an ***accident sequence.*** Earthquakes, aircraft crashes, tornadoe, and flooding from sources outside the plant are examples of external events.(see also ***internal event*** and ***internal plant hazard*** which are other categories of ***initiating events***).

failure mechanism – any of the processes and degradation mechanisms that result in ***failure modes***, including chemical, electrical, mechanical, physical, thermal, and human error, a description of the conditions that lead to a ***failure mode***.

failure mode – a condition of an ***SSC*** that precludes its successful operation to perform a specific function, a description of how the ***SSC*** fails

Failure Modes and Effects Analysis (FMEA) – a systematic process for identifying and documenting failure modes of specific ***SSCs*** and evaluating their effects on other components,

subsystems, and systems. When the ***FMEA*** includes an assessment of the criticality of the failure mode, it is referred to as ***failure modes, effects, and criticality analysis (FMECA)***.

failure probability – the likelihood that an ***SSC*** will fail to operate upon demand or fail to operate for a specific ***mission time***;

failure rate – the conditional **probability** of failure of an ***SSC*** over a small interval of time, given it has not failed previously; also the expected number of failures per unit of time over a population of component demands or operating hours estimated as the ratio of the number of failures in a population of components to the corresponding number of component demands or component hours of operation observed for that population.

fault tree – a deductive logic diagram that depicts how a particular undesired event (fault tree ***top event***) can occur as a logical combination of other undesired events.

graphite oxidation – a chemical reaction involving oxidation of graphite that results from air and/or water ingress to the primary heat transport system and creating the potential for ***chemical attack***.

helium pressure boundary (HPB) – the entire set of pressure vessels, welds, piping, and other ***passive SSCs*** that creates the ***primary heat transport system*** pressure boundary and whose failure has the potential to create a depressurization of the ***primary heat transport system***.

High Temperature Gas Cooled Reactor (HTGR) – the generic family of thermal nuclear reactor concepts that use graphite as the moderator, helium as the primary heat transport working fluid, and TRISO ceramic coated particle fuel elements. Example reactors in this family include the MHTGR, GT-MHR, PBMR, Dragon, Peach Bottom 1, Ft. St. Vrain, AVR, THTR, and VHTR. In Europe, ***HTGRs*** are often referred to as HTRs

initiating event – any event either internal or external to the plant that perturbs the steady state operation of the plant and maintenance of ***safety functions***, thereby initiating an abnormal event such as ***transient*** (i.e., an event that involves changes in or an attempt to change the reactor power level, core or coolant temperatures or pressure) or ***depressurization event*** within the plant. ***Initiating events*** may trigger sequences of events that challenge plant control and safety functions and systems whose failure could potentially lead to an undesirable end state. Categories of **initiating event**s include ***internal events***, ***internal plant hazards***, and ***external events***. In Europe, the last two categories are referred to as internal and external hazards.

internal event – an event originating within a nuclear power plant that could cause an ***initiating event***, which in combination with ***SSC*** failures and/or operator errors, or both, can affect the operability of plant systems and may lead to an ***accident sequence***. By convention, loss of offsite power is considered to be an internal event, but internal fires, internal floods, spatial interactions (i.e. create the possibility for a ***common cause failiure*** due to shared location in proximity to a hazard) and other ***internal plant hazards*** are not included in this ***initiating event*** category.

internal plant hazards – an event originating within a nuclear power plant but external to modeled ***SSCs*** supporting ***safety functions*** that could cause an ***initiating event*** and/or the ***SSCs*** that perform ***safety functions*** in response to the ***intiating event.*** , This ***event*** category includes internal fires, internal floods, and other events that may impact or damage equipment in a spatially connected area in a manner that causes an ***initiating event***, impacts the performance of a ***safety function***, or both.

Licensing Basis Events (LBEs) – **event sequence*s*** that are selected for performance of probabilistic and ***deterministic safety analyses*** to meet design and licensing requirements and to guide the design and operation of the plant.

Probabilistic Risk Assessment (PRA) – a qualitative and quantitative assessment of the ***risk*** associated with plant operation and maintenance that is defined in terms of a set of **accident sequence**s, and a set of risk metrics such as the frequency of radioactive releases to the environment and its consequences on the health of the public (also referred to as a ***probabilistic safety assessment (PSA***)

probability – There are two usages of this term in a PRA, (1) the relative frequency of obtaining a particular results from a random process, (e.g. the **probability** of failure of a component when demanded), and (2) the degree of confidence in the value of an uncertain parameter or quantity that may be a non-varying and non-random constant, (i.e, the **probability** that the **failure rate** of a component is a certain value).

Quantitative Health Objectives (QHOs) – numerical criteria for the acceptable levels of risk to public health and safety in the population surrounding nuclear power plants that satisfy NRC's reactor safety goals. These QHOs are expressed in terms of the annual average individual **probability** of death due to acute radiation syndrome within 1 mile of the site boundary and the annual average individual **probability** of death due to latent cancer per year within 10 miles of the site boundary of a nuclear power plant and these are set at less than 0.1% of the levels due to non-nuclear causes.

radiation dose – energy deposited into human tissue from external, inhaled, or ingested sources of alpha, beta, or gamma radiation measured in units of rem or Sieverts (1 Sv = 100 rem).

radionuclide transport barrier – a ***passive SSC*** that is designed to retain radionuclides and/or to mitigate the radionuclide release ***source term*** during an ***accident sequence***. For the ***modular HTGRs***, such barriers include the physical barriers such as the fuel particle coatings, ***helium pressure boundary***, and reactor building as well as the time delays for radioactivite decay, deposition, and revaporization of the released material within and between the respective physical barriers.

reliability **–** a performance attribute of an ***SSC*** defined as the **probability** the **SSC** successfully performs its safety function(s) over a specified ***mission time*** and in accordance with a set of specified success criteria; the complement of ***unreliability***.

risk – frequency and consequences of an event or set of events, as expressed by the "risk triplet", which provides the answer to the following three fundamental questions addressed in a ***PRA***: (1) What can go wrong? (2) How likely is it? and (3) What are the consequences if it occurs?

safety features – design features of a reactor that are provided specifically to support one or more ***safety functions*** or to support another ***SSC*** which provides a ***safety function.***

safety features, inherent – reactor safety features applied in the design of a reactor that are fundamental to the selection of materials and design characteristics of the reactor fuel, reactor coolant, and moderator (if any) and that support one or more ***safety functions*** and thereby support the integrity of one or more radionuclide transport barriers.

Structures, Systems, or Components (SSCs)

SSC, active – an ***SSC*** whose functioning depends on mechanical movement or an external input such as actuation signal, or supply of motive power. Example active **SSC**s for **HTGR**s include gas blowers, control rods, and relief valves.

SSC, passive **–** An ***SSC*** whose functioning does not depend on mechanical movement or an external input such as actuation signal, or supply of motive power. Example passive **SSC**s for **HTGR**s include the reactor pressure vessel and the reactor cavity cooling system operating during a station blackout sequence, in which case the system functions are accomplished without the need for any ***active SSCs***.

safety functions – a function of an ***SSC*** that prevents or reduces the frequency of one or more **accident sequence**s, mitigates its consequences, or both. Categories ***of safety functions*** include ***required safety functions*** and ***supportive*** safety functions.

safety functions, required – the minimum set of reactor specific ***safety functions*** that must be maintained to prevent a significant release of radioactive material from the plant that would exceed the ***Top Level Regulatory Criteria (TLRC)*** used to establish licensing requirements. These ***required safety functions*** for ***Modular HTGRs*** include: control heat generation (reactivity), control core heat removal, control chemical attack of core and fuel, maintenance of core geometry and reactor vessel structural integrity (all of which support a more general ***safety function*** of retaining the radionuclide inventory within the fuel particles). These ***required safety functions*** must be provided in appropriate combinations on specific ***event sequences*** to prevent a significant release of radioactive material to the environment in relation to the ***TLRC*** for the ***DBEs***.

safety functions, supportive – are functions other than ***required safety functions*** that contribute to protecting the health and safety of the public by providing safety margins and **defense-in-depth** that contribute to the prevention of ***accident sequences***, reduction in sequence frequencies, reduction of sequence consequences, or a combination of these. Examples of supportive safety functions for **HTGR**s include isolation of ***HPB*** leaks and breaks, forced convection cooling of the reactor, pump-down of ***primary heat transport system,*** and filtration of releases from the reactor building.

source term – a description of the type, quantity, radionuclide species, chemical form, thermal energy, and timing of the release of radioactive material from the plant during an ***accident sequence*** that is sufficient to estimate offsite radiation doses and radiological consequences.

success criteria – criteria for establishing the minimum number or combinations of systems or components required to operate, and minimum levels of performance of each component during a specific ***mission time***, under specific condtions, to ensure that the specified safety functions are satisfied and that a safe ***stable end state*** is reached.

system failure – termination or inability of the ability of a system to perform any one of its ***safety functions*** in accordance with specified ***success criteria*** .

Top Level Regulatory Criteria (TLRC) – licensing criteria that establish the acceptable ranges of frequencies and consequences for ***Licensing Basis Events*** as determined in the associated probabilistic (i.e., ***PRA***) and ***deterministic safety analysis***.

unavailability – performance attribute of an ***SSC*** defined *as* the **probability** or fraction of time that the ***SSC*** is not capable of performing its function given it is demanded at the time of demand; the complement of ***availability***

uncertainty – a representation of the confidence in the state of knowledge about the parameter values, models, and assumptions used in quantifying the frequencies and consequences of **accident sequence**s in a ***PRA***.

unreliability – an ***SSC*** performance attribute defined as the **probability** of failure to perform a ***safety function***(s) over a specified ***mission time*** in accordance with a specified ***success criteria***; the complement of ***reliability***.

APPENDIX 14B FINAL DESIGN REVIEW PRESENTATION TO BEA

Section 14
Safety

Fred Silady

Preconceptual Design Report
90% Design Review

May 8-10, 2007

P B M R

Westinghouse NGNP Team

Scope

- **PBMR NGNP Safety Design Approach**
- **Risk-Informed and Performance-Based Licensing Approach**
- **Treatment of Hydrogen Production Hazards**

PBMR Safety Functions

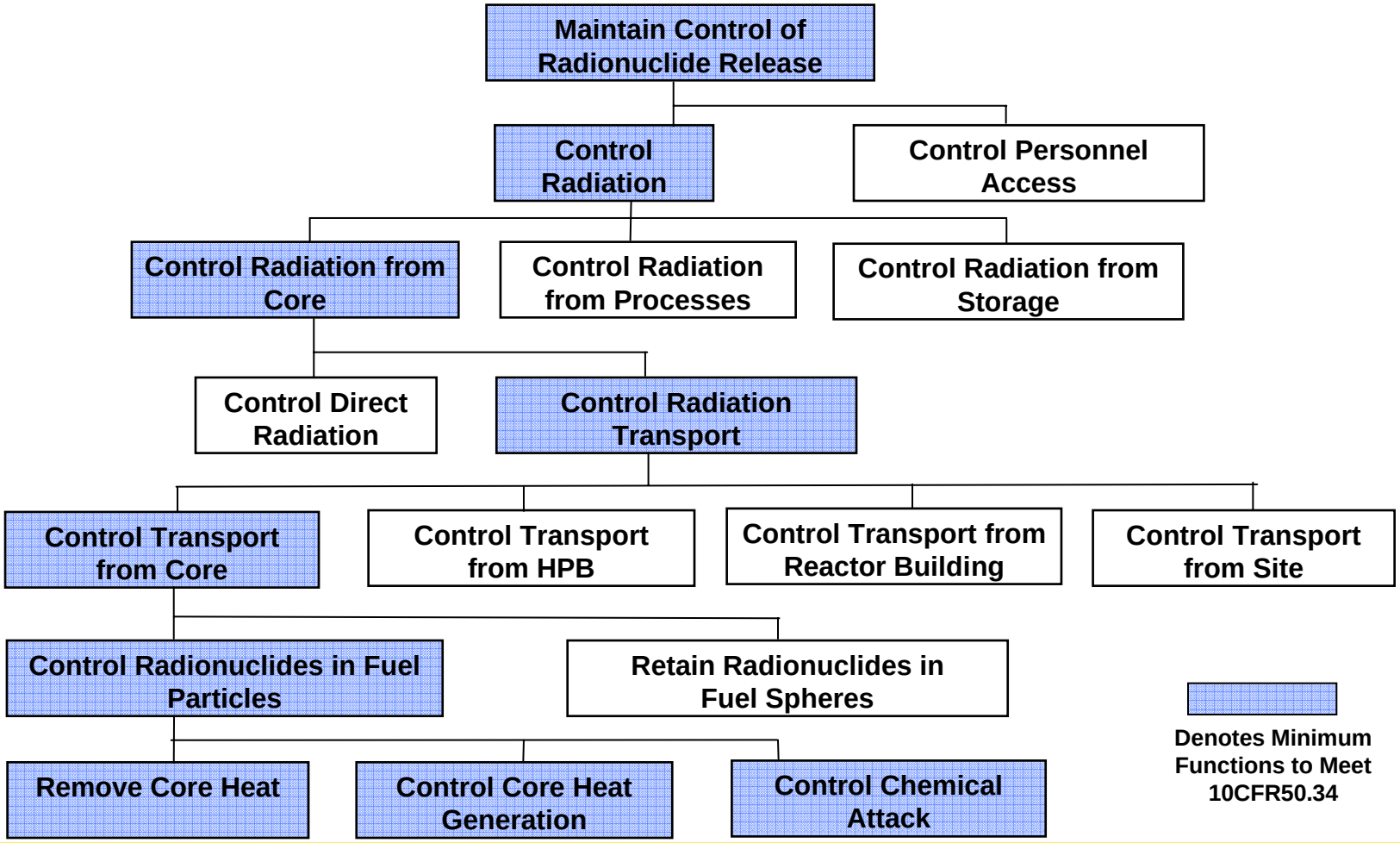

Inherent Characteristics of PBMR Fuel-Moderator-Coolant

- **Ceramic-coated Pebble Fuel**
  - High temperature capabilities
  - Chemical compatibility with moderator and coolant
- **Graphite Moderator**
  - High temperature capabilities
  - High heat capacity
  - Chemical compatibility with fuel and coolant
  - Large neutron migration length for neutron stability
- **Helium Coolant**
  - Single phase
  - Chemically and neutronically inert
  - Low stored thermal energy

Role of Engineered Design Features

- Additional engineered design features provided to:
  - Meet plant reliability, availability and investment protection requirements
  - Provide prevention and mitigation as part of the design defense-in-depth
  - Use of passive features preferred

SSCs Supporting Core Heat Removal

- **Inherent and passive capabilities**
  - Low power density
  - Large thermal heat capacity of core
  - Long, slender annular core, annular geometry
  - Uninsulated reactor vessel and reactor cavity configuration

- **Engineered systems**
  - Power Conversion System (PCS)
  - Core Conditioning System (CCS)
  - Reactor Cavity Cooling System (RCCS)
    - Active mode
    - Passive mode

P B M R

SSCs Supporting Control of Heat Generation

- **Inherent and passive capabilities**
  - Large negative temperature coefficient of reactivity
  - Less excess reactivity due to on-line fueling
  - Self-regulating behavior due to close temperature-neutronic coupling
  - Gravity insertion of control rods and small absorber spheres (SAS)

- **Engineered systems**
  - Control and protection systems
    - Operational Control System (OCS)
    - Equipment Protection System (EPS)
    - Reactor Protection System (RPS)
  - Reactivity control systems
    - Reactivity Control System (RCS) trip release of control rods
    - Reserve Shutdown System (RSS) release of small absorber spheres (SAS)

P B M R

SSCs Supporting Control of Chemical Attack

- Inherent and passive capabilities
  - High purity inert helium coolant
  - HPB high reliability piping and pressure vessels
  - Minimum of large penetrations in top of reactor vessel
  - Interfacing systems at lower pressure than HPB during operation
- Engineered systems
  - Isolation valves in HPB interfacing water systems
  - Reactor building PRS relief blowout panels and exhaust duct dampers limit air ingress

P B M R

Risk-Informed Performance-Based Licensing Approach

Elements of Approach	Purpose
• Top Level Regulatory Criteria (TLRC)	• Establish what level of safety must be achieved in terms of the frequencies and radiological doses of event sequences
• Licensing Basis Events (LBEs)	• Define when and under what conditions the TLRC must be met based on event sequences selected from the PRA
• Required Reactor Specific Safety Functions • Regulatory Design Criteria (RDC) • Safety Classification of SSCs • Plant Capability Defense-in-Depth	• Establish how it will be assured that the TLRC are met
• Design Basis Accident (DBA) Conditions • Special Treatment Requirements • Programmatic Defense-in-Depth	• Provide assurance as to how well the TLRC are met by satisfying deterministic requirements to reduce uncertainties in the probabilistic results

Comparison of PBMR DPP LBEs to TLRC

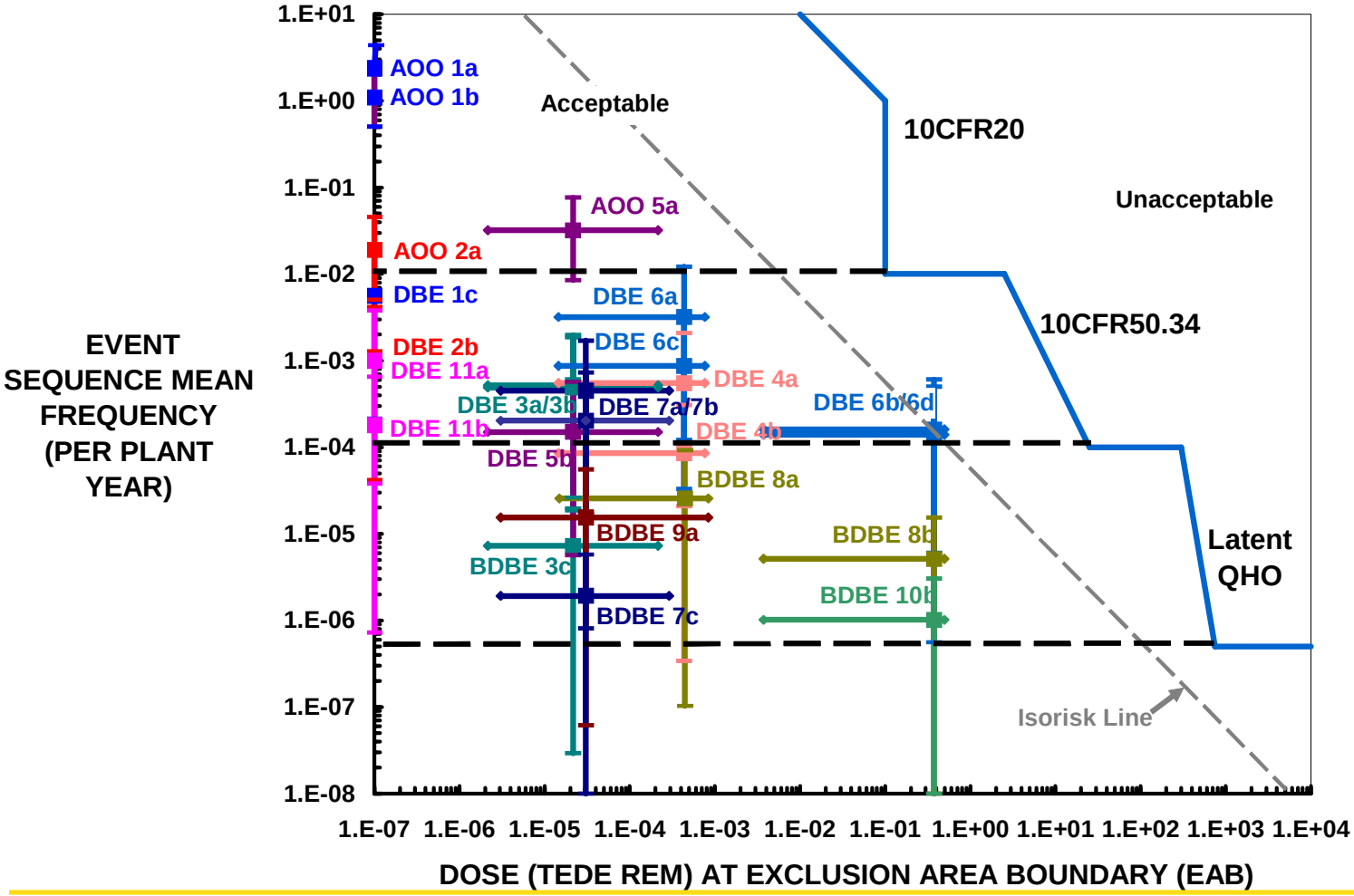

Safety Assessment Approach for HPF

Objective: Provide an integrated and balanced assessment of all internal and external hazards through the systematic application of risk assessments

- Performance of a Process Hazards Assessment to support the design of the HPF which includes the Hydrogen Production System (HPS) and buildings
- Preliminary screening evaluation of event sequences associated with HPS process hazards
- Detailed risk analysis of event sequences associated with HPS process hazards and the impact of HPF operations on the NHSS

Expected Outcomes:

- If warranted some licensing basis events may be identified with initiating events and event sequences involving HPS hazards;
- safety related SSCs will be designed to perform their safety functions in light of possible HPS hazards
- Design specifications may be identified that preclude risk significant event sequences associated with hydrogen production

Safety Summary

- PBMR Safety Design Approach
  - Radionuclide Retention within the Fuel
  - Additional HPB and RB for Defense-in-Depth
  - Use of Intrinsic Characteristics of Compatible Materials for Fuel-Moderator-Coolant
  - Primary Reliance on Passive Design Features for Safety Functions
  - Active Engineered Safety Features for Defense-in-Depth
- Risk-Informed, Performance-Based Licensing Approach
- Hydrogen hazards analysis planned within the same integrated approach

NGNP-15-RPT-001 **May 2007**
Revision 0

NGNP and Hydrogen Production Preconceptual Design Report

SECTION 15: SAFEGUARDS AND SECURITY

Revision 0

APPROVALS

Function	Printed Name and Signature	Date
Author	James W. Winters Westinghouse Electric Company, LLC	May 18, 2007
Reviewer	Kenneth R. Balkey Westinghouse Electric Company, LLC	May 18, 2007
Approval	Sten A. Caspersson Westinghouse Electric Company, LLC	May 18, 2007

Westinghouse Electric Company LLC
Nuclear Power Plants
Post Office Box 355
Pittsburgh, PA 15230-0355

©2007 Westinghouse Electric Company LLC
All Rights Reserved

LIST OF CONTRIBUTORS

Name and Organization	Date
James W. Winters Westinghouse Electric Company	May 2007
Sten A. Caspersson Westinghouse Electric Company	May 2007
Johan Slabber PBMR (Pty) Ltd.	May 2007

BACKGROUND INTELLECTUAL PROPERTY

Section	Title	Description
NONE		NONE

REVISION HISTORY

RECORD OF CHANGES

Revision No.	Revision Made by	Description	Date
0	James W. Winters Westinghouse Electric Company	Initial Issue	May 18, 2007

DOCUMENT TRACEABILITY

Created to support the following Document(s)	Document Number	Revision
NGNP and Hydrogen Production Preconceptual Design Report	NGNP-01-RPT-001	0

TABLE OF CONTENTS

LIST OF TABLES **15-6**

LIST OF FIGURES **15-7**

15 SAFEGUARDS AND SECURITY DESCRIPTION FOR THE PBMR NGNP **15-8**

SUMMARY AND CONCLUSIONS **15-8**

INTRODUCTION **15-9**

15.1 SAFEGUARDS INTEGRATION **15-11**

15.1.1 FUEL SECURITY INTRODUCTION **15-11**

15.1.1.1 Fuel Type and Form 15-11
15.1.1.2 Fuel Transport 15-14
15.1.1.3 Fuel Receipt 15-15
15.1.1.4 On-Site Fuel Handling Facility 15-18
15.1.1.4.1 Governing Portions of Title 10 of the Code of Federal Regulations 15-24
15.1.1.4.2 Overall Security Acceptance Criteria 15-24
15.1.1.4.3 Relationship to Reactor and Hydrogen Plant 15-24
15.1.1.4.4 General Security Design Guidelines for PBMR Fuel Handling Facility 15-24
15.1.1.5 International Security Background 15-25

15.1.2 NUCLEAR HEAT SUPPLY FACILITY SECURITY **15-28**

15.1.2.1 Governing Portions of Title 10 of the Code of Federal Regulations 15-28
15.1.2.2 Overall Security Acceptance Criteria 15-30
15.1.2.3 General Description of Protected and Vital Areas 15-30
15.1.2.4 General Descriptions of Design Basis Threats 15-31
15.1.2.5 Relationship of Reactor Plant to Fuel and Hydrogen Facilities 15-31
15.1.2.6 General Security Design Guidelines 15-32

15.1.3 OVERALL FACILITY BEYOND DESIGN BASIS SECURITY CONSIDERATIONS **15-32**

15.1.3.1 Governing Portions of Title 10 of the Code of Federal Regulations 15-33
15.1.3.2 Overall Beyond Design Basis Security Acceptance Criteria 15-33
15.1.3.3 General Beyond Design Basis Threat Descriptions 15-33
15.1.3.4 General Design Guidelines for Beyond Design Basis Security Threats 15-33
15.1.3.5 Cyber Security 15-34

15.2 SECURITY DESIGN INTEGRATION **15-35**

15.3 COMPLEXITY, RISK AND FUTURE STUDIES **15-36**

15.3.1 COMPLEXITY AND RISKS **15-36**

15.3.2 FUTURE STUDIES **15-36**

REFERENCES **15-37**

LIST OF ASSUMPTIONS **15-38**
APPENDICES **15-39**
APPENDIX 15A FINAL DESIGN REVIEW PRESENTATION TO BEA **15-39**

LIST OF TABLES

NONE

LIST OF FIGURES

Figure 15.1-1: Fuel Sphere Design 15-12
Figure 15.1-2: Initial Approach to Criticality Loading 15-18
Figure 15.1-3: Transition to Core Containing Only Fuel 15-19
Figure 15.1-4: Transition to Equilibrium Core 15-20
Figure 15.1-5: Fuel Handling During Normal Operation 15-21
Figure 15.1-6: Core Unloading and Backfilling with Graphite 15-22
Figure 15.1-7: Core Reloading and Unloading of Graphite 15-23
Figure 15.1-8: Schematic of Proposed IAEA Support Measures for the Application of Fuel Safeguards at PBMR 15-27

15 SAFEGUARDS AND SECURITY DESCRIPTION FOR THE PBMR NGNP

SUMMARY AND CONCLUSIONS

Safeguards and security for the PBMR NGNP must be considered from the very beginning of the preconceptual design. In today's world, protection of the public from hazards that could be created or exacerbated by threats to our society must be placed high in the designers' priorities.

By its very nature, the PBMR design is inherently more resistant to attacks than light water reactor designs currently deployed and being licensed. Accordingly, it is envisioned that the current NRC rules and regulations for LWR-based security can be amended in the future to account for the relative inherent robustness of the PBMR design.

At this preconceptual stage, general design guidelines and design features can be addressed to enhance security for the plant. This effort, in conjunction with investigation of necessary and reasonable changes to the NRC rules and regulations, will allow for detailed design of a facility that is safe and secure without relying solely on a human guard force. A desirable feature of the PBMR is its relative low operating cost. This feature will be diminished if a large guard force is required to protect the plant.

The preconceptual design of the PBMR NGNP was reviewed against current security practice for current operating reactors in the United States. Initial design decisions were made based upon this review. Obviously, the design will be reviewed as details are developed to ensure the implementation of complete and reasonable design features for security. This will include taking advantage of the PBMR inherent resistance to attacks.

PBMR (Pty) Ltd. has developed a Safeguards Implementation Plan. This Plan was submitted to and accepted by the IAEA which have used it to generate their PBMR Safeguards Approach. PBMR fuel safeguards implementation will be based on containment and surveillance measures, supplemented by fuel flow verification measurements to and from difficult-to-access fuel strata locations such as the core fuel.

In summary, the PBMR has inherent design features that offer safeguards and security protection. The guidelines in this Section will be used to ensure that these features will be recognized for the development and implementation of PBMR-specific regulations.

INTRODUCTION

This Section describes the various aspects of Safeguards and Security related to the PBMR NGNP and integrates the design requirements and features for security into the preconceptual design of the plant. It is based upon the lessons learned while developing the Combined License Application for AP1000. Many aspects of security are now included in various rules of Title 10 of the Code of Federal Regulations (CFR). Other details and expectations are embedded in documentation that is classified as Safeguards Information and Confidential. The efforts for this preconceptual phase of NGNP are unclassified. The results of these efforts are guidance and recommendations for layout to enhance the design's potential to pass a rigorous security assessment. This section covers plant design features rather than operational programs and responses to threats. All acronyms are defined in Appendix A of the PCDR.

The NRC has mandated that licensees must establish and maintain physical protection systems that protect against radiological sabotage and theft and diversion of special nuclear materials. This mandate is included in the rules of Title 10 and in subsequent NRC regulations and orders. As a result of the attacks of September 11, 2001, the NRC issued a number of Interim Compensatory Measures (ICMs) related to security that had the force of rule in advance of the revised rules being processed. Since that time, operating plants have made revisions to their physical and operational security features and programs. NRC has audited these modifications and has performed Force-on-Force exercises to evaluate their effectiveness. Both the NRC and the nuclear industry, with the lead of the Nuclear Energy Institute (NEI), have established lessons learned programs and industry templates for compliance with the current expectation of the NRC.

Security, as defined by 10CFR73 [15-2], is the protection from radiological sabotage or theft and diversion of special nuclear materials, and must be provided throughout the life cycle of the nuclear power plant and its fuel. 10CFR73 covers both power plant security and the identification and handing of safeguards information. Current industry practice is to use these terms together. 10CFR74 [15-5] covers the control and accounting for special nuclear materials. The small portion of this required for a PBMR power plant will be administered within the security and safeguards provisions of 10CFR73.

This Section provides insights and guidelines to the designers and reviewers of the PBMR NGNP related to the physical security of the fuel and the power plant itself. The focus of this Section is on physical design, since operational programs, such as security force makeup, training, fitness for duty, etc., will be established at the time of plant licensing and are not directly dependent upon the physical design. It is an abbreviated compilation of primary requirements, criteria, NRC guidance and industry practice. It will be updated and maintained in conceptual design.

Subsection 15.1.1 discusses safeguards of the fuel including its transport and handling at site. Subsection 15.1.2 covers Nuclear Heat Supply Facility security related to the Design Basis Threat (DBT). Subsection 15.1.3 discusses some aspects of the beyond DBT features currently implemented by operating and new nuclear power plant designs in response to the attacks of September 11.

Since this Section is Unclassified, many such details of the NRC rules and regulations cannot be specified. Following preconceptual design, designers and reviewers will be required to obtain clearance from the NRC to review and handle Safeguards Information (SGI).

All acronyms are defined in PCDR Appendix A.

15.1 SAFEGUARDS INTEGRATION

Section 15.1 provides assurance that the overall safeguards approach for NGNP and its fuel is seamless, robust and achievable.

15.1.1 Fuel Security Introduction

This section identifies a preconceptual fuel safeguards plan for the NGNP PBMR type fuel consistent with current practice for LWR fuel in the United States and the security plan for PBMR fuel in South Africa [15-1]. It is consistent with Westinghouse practice and covers the fuel from its factory to its receipt and handling at NGNP, resulting in a preconceptual safeguards plan for fuel between its factory and receipt at NGNP.

15.1.1.1 Fuel Type and Form

The PBMR core consists of fuel elements containing uranium dioxide coated particles that generate heat by means of fission reactions. The fuel pebble consists of uranium dioxide coated fuel particles and matrix graphite pressed into a spherical shape. A fuel sphere is divided into two regions. The inner spherical region is known as the fuel region, while the outer shell surrounding the fuel region is known as the fuel-free region. The fuel region of each fuel sphere contains a large number of evenly dispersed spherical particles known as coated particles in which the fuel is contained while there are no coated particles in the fuel-free region.

The design of the coated particles and fuel sphere is summarized in Figure 15.1-1.

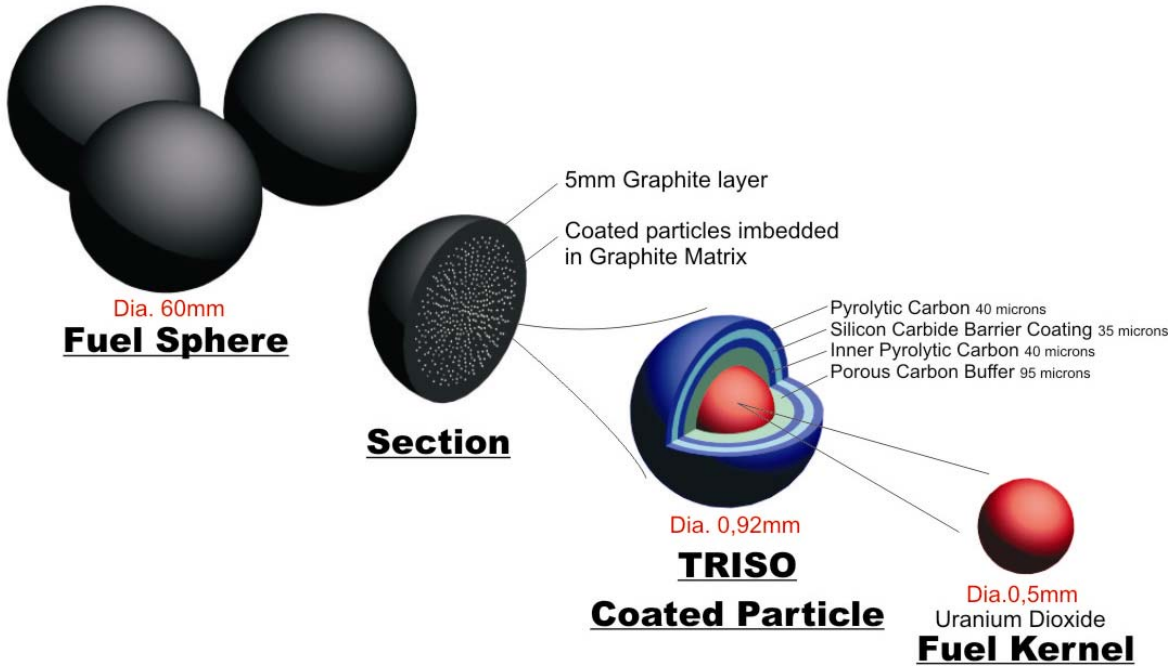

Figure 15.1-1: Fuel Sphere Design

Particle Design

The properties of LEU-TRISO coated particles are among the most important factors determining the radiological safety of the PBMR. This safety feature is a result of fission product retention in the fuel spheres, and fuel temperatures that can be tolerated in the reactor core, as determined by coated particle properties.

Kernel: The spherical fuel kernel consists of stoichiometric uranium dioxide (UO_2). There is no consideration of mixed oxide (MOX) for an NGNP PBMR.

Buffer Layer: The first layer in contact with the kernel is known as the buffer layer; it is deposited from acetylene (C_2H_2) in a heated fluidized-bed. The purpose of the buffer layer is to provide void volume for gaseous fission products in order to limit pressure build-up within the coated particle. It also serves to decouple the kernel from the inner pyrocarbon layer to accommodate kernel swelling, thereby reducing the build-up of stress in the outer coating layers during irradiation. The buffer layer also absorbs energetic fission products recoiling from the kernel surface, thus protecting the inner pyrocarbon layers of the coated particle.

Inner Pyrocarbon Layer: The inner high-density, isotropic layer of pyrolytic carbon is also referred to as the Inner Low Temperature Isotropic (ILTI) pyrocarbon layer. It is deposited from a mixture of acetylene and propylene in a heated fluidized-bed. The ILTI layer forms the first load-bearing barrier against the pressure exerted by fission products within the fuel kernel

and buffer layer, thereby reducing the pressure on the next layer, which consists of silicon carbide (SiC). During irradiation, the ILTI and Outer Low Temperature Isotropic (OLTI) layers shrink at first, expanding again as higher fast neutron dose levels are reached. The interaction between the ILTI and OLTI high-density pyrocarbon layers and the SiC layer sandwiched between them plays an important part in keeping the SiC layer under compressive stress as long as possible during irradiation.

Silicon Carbide Layer: When SiC is deposited from methyltrichlorsilane under the correct conditions, a layer of nearly 100% theoretical density is obtained. At high temperatures, the ILTI and OLTI layers partially lose their ability to contain cesium, silver and strontium. The purpose of the SiC layer is to prevent the release of these fission products into the graphite matrix, and then into the reactor helium stream. The SiC layer thus acts as the principal pressure and fission product retention barrier in the coated particle. The coated particle structure results in the SiC layer being kept under compression as long as possible by its interaction with the ILTI and OLTI pyrocarbon layers as described above. The production of fuel spheres having coated particles with intact SiC layers and the assurance that these layers will remain intact under all foreseeable reactor core conditions form the primary barrier to the release of radiation from PBMR.

Outer Pyrocarbon Layer: The OLTI pyrolytic carbon layer is deposited in the same way as the ILTI layer. The function of this layer is to protect the SiC layer against damage in the fuel manufacturing processes following the coating process. It also provides pre-stress on the outside of the SiC layer, due to its interaction with the ILTI layer under fast neutron irradiation during the fuel lifetime in the reactor core, thereby reducing the tensile stress in the SiC layer.

Fuel Element Design

A fuel sphere is formed by pressing “matrix graphite” into a 50 mm inner sphere, each of which contains approximately 14,500 coated particles. The inner fuel sphere is then coated with a protective 5 mm-thick layer of graphite.

Matrix Graphite: The function of the matrix graphite is to contain the coated particles in a fuel sphere, protect them from mechanical damage, and provide a heat conduction path between the coated particles and the reactor coolant, helium. The carbon in the matrix also acts as the moderator for neutrons in the PBMR core.

Pressing: Fuel spheres are pressed at high pressure, without application of external heat, to obtain the required density that ensures adequate structural stability and heat conduction.

Currently, there are no plans to use MOX fuel for PBMR. If and when MOX is contemplated, the additional security requirements for special nuclear materials will be applied to the entire fuel cycle.

In summary, the PBMR fuel form is inherently resistant to being used for radiological sabotage, due to the hundreds of thousands of individual spheres, the coated particles, and the chemically stable fuel. Licensing of the fuel fabrication facility and its attendant security is assumed to not be part of the NGNP efforts. Security of the fuel while at NGNP will be as described in Subsection 15.1.1.4 for the nuclear facility.

15.1.1.2 Fuel Transport

Fuel spheres will be transported by licensed carriers in the same manner as light water reactor fuel is transported today. The fuel spheres will be in approved/licensed containers – expected to be 1000 spheres each.

The following key safety objectives underlie the fundamental safety philosophy for the design and manufacture of the PBMR Fresh Fuel Transport Container (FFTC).

- Take all reasonable practicable measures throughout the entire lifespan of the FFTC.
  - Equal to national and international safety norms
  - Minimize the number and severity of potential transport related incidents posing a threat to man or environment or involving loss of product or equipment
  - Mitigate the consequences of transport incidents should they occur
  - Ensure that for possible accidents taken into account in the transport strategy, the consequences of the associated radiological and/or chemical hazards will be less than the prescribed limits.

- Identify emergency systems in order to minimize the extent of potential damage caused by any incident.

The above-mentioned safety objectives will be achieved by:

- Demonstrating that the safety design, manufacture and transport of the FFTC are within adequate safety margins. This goal implies that:
  - The transport procedures have been analyzed and evaluated to ensure that for normal and identified potential accident conditions adequate provision has been made for safety issues.
  - The defense-in-depth principle is applied in the transport strategy.
  - The procedures make provision that for all pathways the radiation and/or chemical doses received by the operators and public, and the releases to the environment from normal operations and from accident conditions, not only meet all regulatory limits and constraints, but are also As Low As Reasonably Achievable.
  - Test Programs will demonstrate that equipment utilized will comply with regulatory requirements.

- Operate inside a series of defined programs throughout its lifespan. These include:
  - Operational procedures
  - Radiation protection programs
  - Maintenance programs
  - In-service inspection programs
  - Security plan
  - Emergency plan

The world-wide safety of the transport of radioactive materials is based on the IAEA Transport Regulations. The provisions of these regulations are not based on quantitative risk assessments, and they do not require such assessments to be undertaken. The excellent world-wide safety record of the transport of radioactive material over almost 40 years under the regulations endorses their effectiveness.

A licensing strategy is being outlined for the PBMR FFTC in South Africa. When the FFTC is approved by the South African Regulator, it shall be utilized to transport fresh fuel spheres from the Pelindaba fuel plant to the PBMR DPP.

For approval for use outside South Africa, this strategy will require a separate revalidation of the license by all those competent authorities through whose jurisdiction the containers transit, including territorial waters and airspace.

15.1.1.3 Fuel Receipt

The following procedure for fresh fuel receipt is based on draft PBMR DPP guidance. The steps guide the safety analysis, the design of the access to the NHSS Building, as well as the handling equipment to offload and replenish fresh fuel canisters. The processes and systems applied are resistant to sabotage.

The steps describe the activities to replenish fresh fuel at the NGNP, from when the cargo truck transporting a 6 M ISO container arrives at the NGNP site, up to the point where the Fresh Fuel Canister (FFC) is placed in the Container Storage Matrix (CSM). The steps further describe the activities to remove the empty FFC's from the NGNP, up to the point where the cargo truck departs from the site.

Major steps are highlighted.

Truck and Security Escort Arrive at Site

A cargo truck with the 6 M ISO container loaded with full Fresh Fuel Containers (FFC's) travels to the NGNP site with the required security escort. The cargo truck and security escort

arrive at INL and access the NGNP site via the main Security Gate according to the access control procedure.

The cargo truck moves from the NGNP main security gate to the Nuclear Heat Supply Facility (NHSF) Building Loading Bay. The Loading Bay doors are opened and the truck drives into the bay. The 6 M ISO freight container containing the FFC's is offloaded onto the loading bay floor.

Unlock and Open ISO Container

The receiving clerk unlocks and breaks the seals on the ISO container and opens the doors. All activities involving off-loading and replenishment of FFC's are done under surveillance of the Security Surveillance System video cameras as well as IAEA Safeguard System video cameras.

The receiving clerk conducts a visual inspection of the FFC's on the pallets inside the ISO container. The receiving clerk may require a leadlight or a flashlight to enable him/her to see better inside the container, to determine whether there are signs that the FFC's may have been damaged during transport and record any visible damage to the FFC's on the delivery note. The receiving clerk signs off the delivery.

Unload 4 Pallets with FCC's from ISO Container

The 4 pallets containing full FFC's are unloaded from the ISO Container. The pallets with full FFC's are placed on the floor outside the ISO container to facilitate scanning of the digital tags on the FFC lids.

The digital tags fitted to the FFC lids are scanned with a portable hand-held reader to record the required data off the tag. The data from the reader is later transferred to the Operation Control System (OCS) inventory control system.

Open the Outer Fuel Delivery Door of the NHSS Building. This door shall be interlocked with the Inner Fuel Delivery Door, so when the outer door is open the inner door will not open and vice versa.

The pallet with full FFC's shall be lifted from the floor and presented to the FFC Transfer Mechanism. When the Pallet with full FFC's has been presented to the FFC Transfer Mechanism, the NHSS Building Outer Fuel Delivery Door is closed.

Open the Inner Fuel Delivery Door of the NHSS Building. This door shall be interlocked with the Outer Fuel Delivery Door, so when the inner door is open, the outer door will not open and vice versa.

Transfer Pallet with FCC's into NHSS Building

The pallet with the full FFC's is transferred into the NHSS Building by the Transfer Mechanism. If there is a pallet with empty FFC's inside the NHSS Building, it may be transferred to the position between the Inner and Outer Fuel Delivery Doors at this point. When a pallet with empty FFC's is placed in the Transfer Mechanism, the NHSS Building Inner Fuel Delivery Door is closed. If there are no pallets with empty FFC's to move to the Loading Bay, the NHSS Building Inner Fuel Delivery Door is closed with the cavity in-between empty.

Move the Pallet with full FFC's to the Entry Point of the Canister Storage Unit (CSU). When there is a pallet in the entry point of the CSU already, move the pallet containing full FFC's to an intermediate position inside the Fresh Fuel Storage Area. When the canister manipulator (CM) has unloaded the pallet in the entry point and filled it with empty FFC's, the pallet is swapped with a pallet containing full FFC's.

Move Container Manipulator to FCC Position

Move the Canister Manipulator (CM) to the position over the pallet in the entry point where the full FFC must be collected. Lower the CM clamp and engage the clamp into the annular ring on the full FFC lid. After the CM clamp is engaged, lift the full FFC from the pallet and transfer it to an open storage position in the Canister Storage Matrix (CSM). Lower the full FFC into the empty storage position until the base of the FFC stands on the CSM. Release the CM Clamp and lift the manipulator clear of the FFC. If the CSM is full with FFC's, stop the fresh fuel replenishment process. If there are still open spaces in the CSM, the CM collects an empty FFC and returns to the pallet in the entry point to collect another FFC.

Move the FFC manipulator to the position where an empty FFC is standing on the CSM. Lower the FFC manipulator and engage the clamp into the annular ring on the empty FFC lid. After the clamp is engaged, lift the empty FFC from the CSM. The CM then moves to an open storage position in the FFC Pallet at the CSU entry point. If the Pallet is full of empty FFC's, the Pallet is removed and a Pallet with full FFC's is placed in the CSU entry point. The empty FFC is then placed in the open position in the CSM. The empty FFC is placed in an open position of the Pallet. The CM clamp is released when the empty FFC is standing with its base on the pallet inside the support ring. The manipulator arm lifts clear of the FFC.

Pallets with empty FFC's are transferred out of the NHSS Building into the Loading Bay. Load the Pallet with empty FFC's into the 6 M ISO Container and lash them down for transport.

Close and Lock ISO Container

The doors of the ISO Container are closed and locked by the receiving clerk. The 6 M ISO container is loaded onto the cargo truck. The cargo truck with the 6 M ISO Container departs from the NGNP with its security escort.

15.1.1.4 On-Site Fuel Handling Facility

The Fuel Handling and Storage System (FHSS) is used to do all the fuel handling operations within the PBMR plant. Figure 15.1-2, Figure 15.1-3, Figure 15.1-4, Figure 15.1-5, Figure 15.1-6 and Figure 15.1-7 show in a schematic format the Fuel Handling and Storage System operation during all modes of operation.

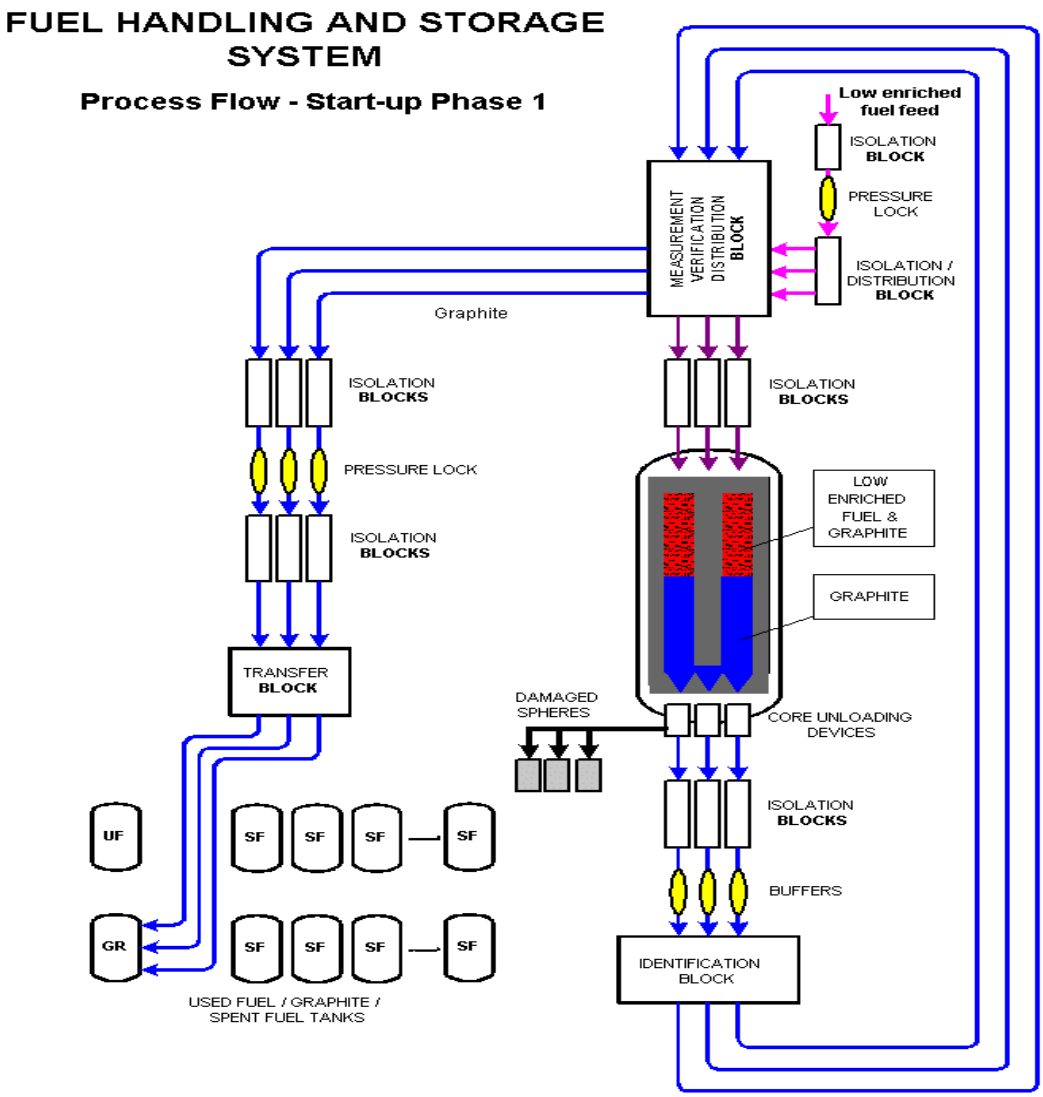

Figure 15.1-2: Initial Approach to Criticality Loading

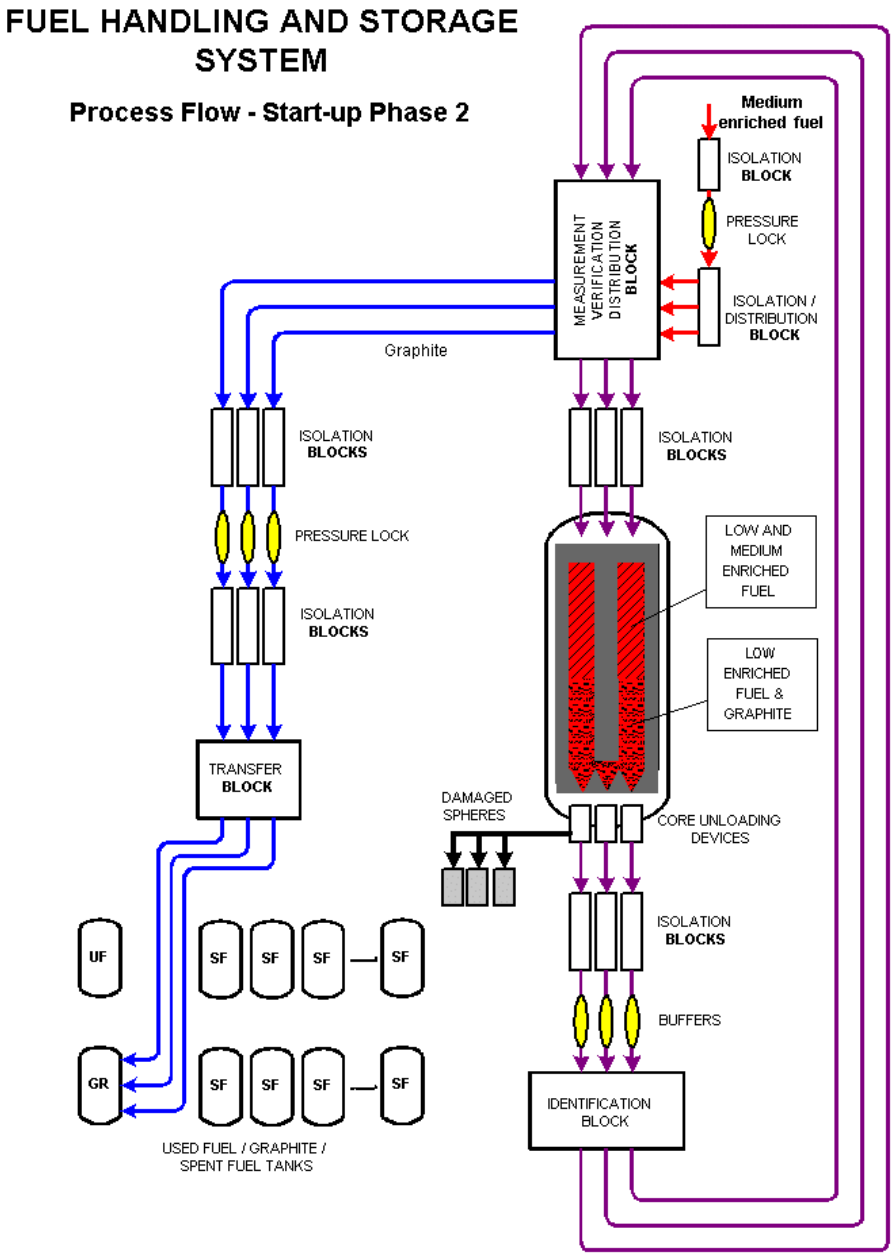

Figure 15.1-3: Transition to Core Containing Only Fuel

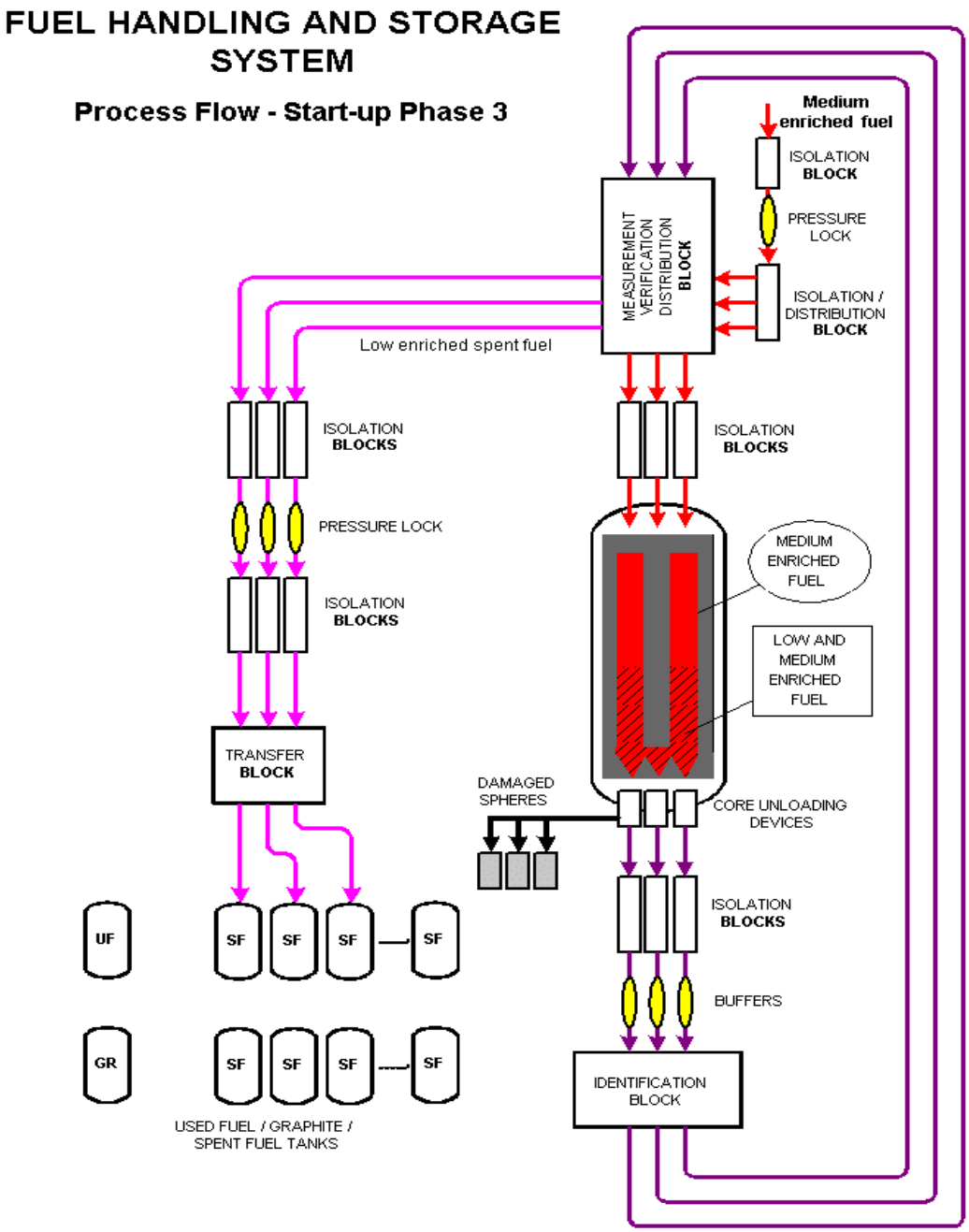

Figure 15.1-4: Transition to Equilibrium Core

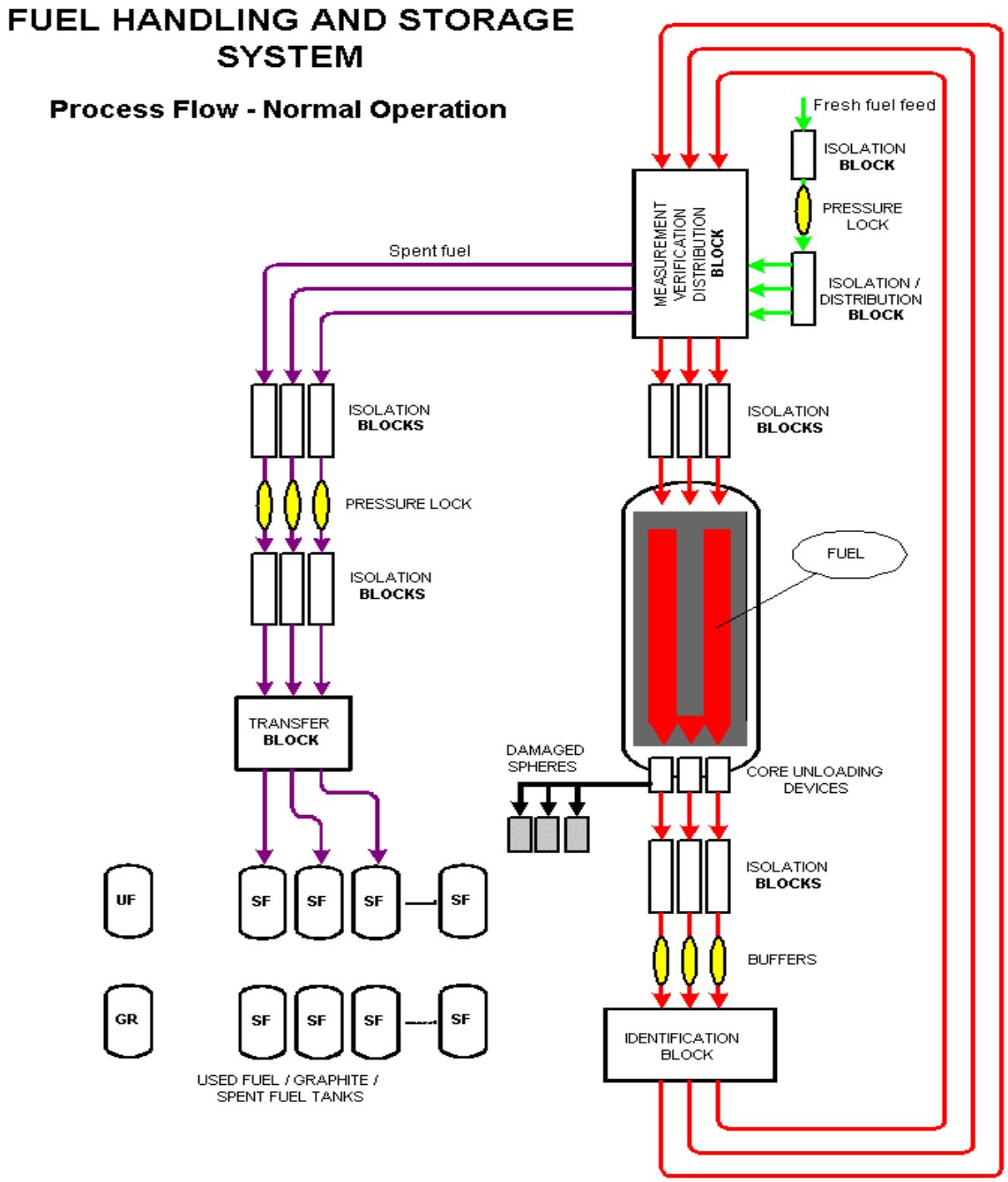

Figure 15.1-5: Fuel Handling During Normal Operation

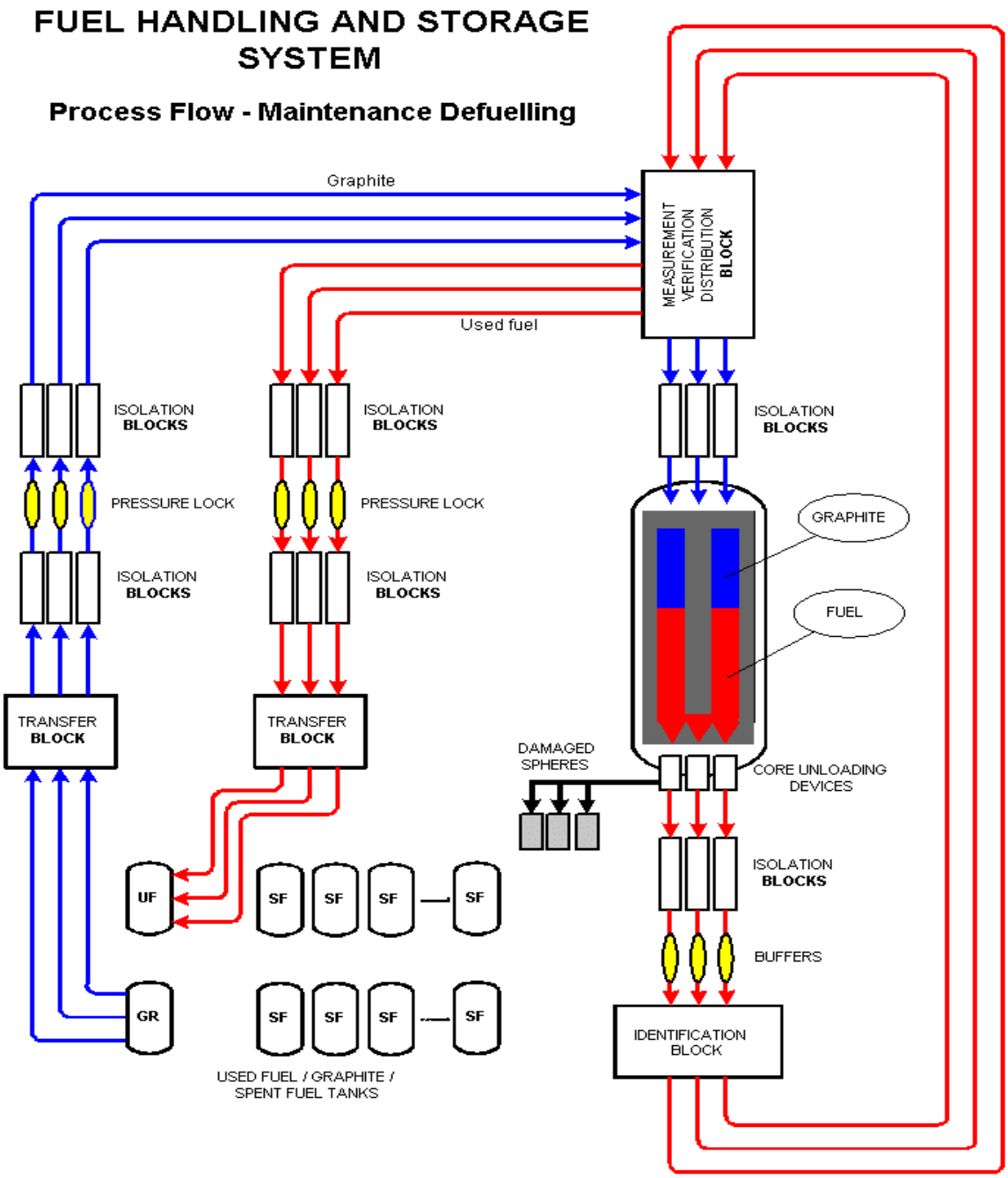

Figure 15.1-6: Core Unloading and Backfilling with Graphite

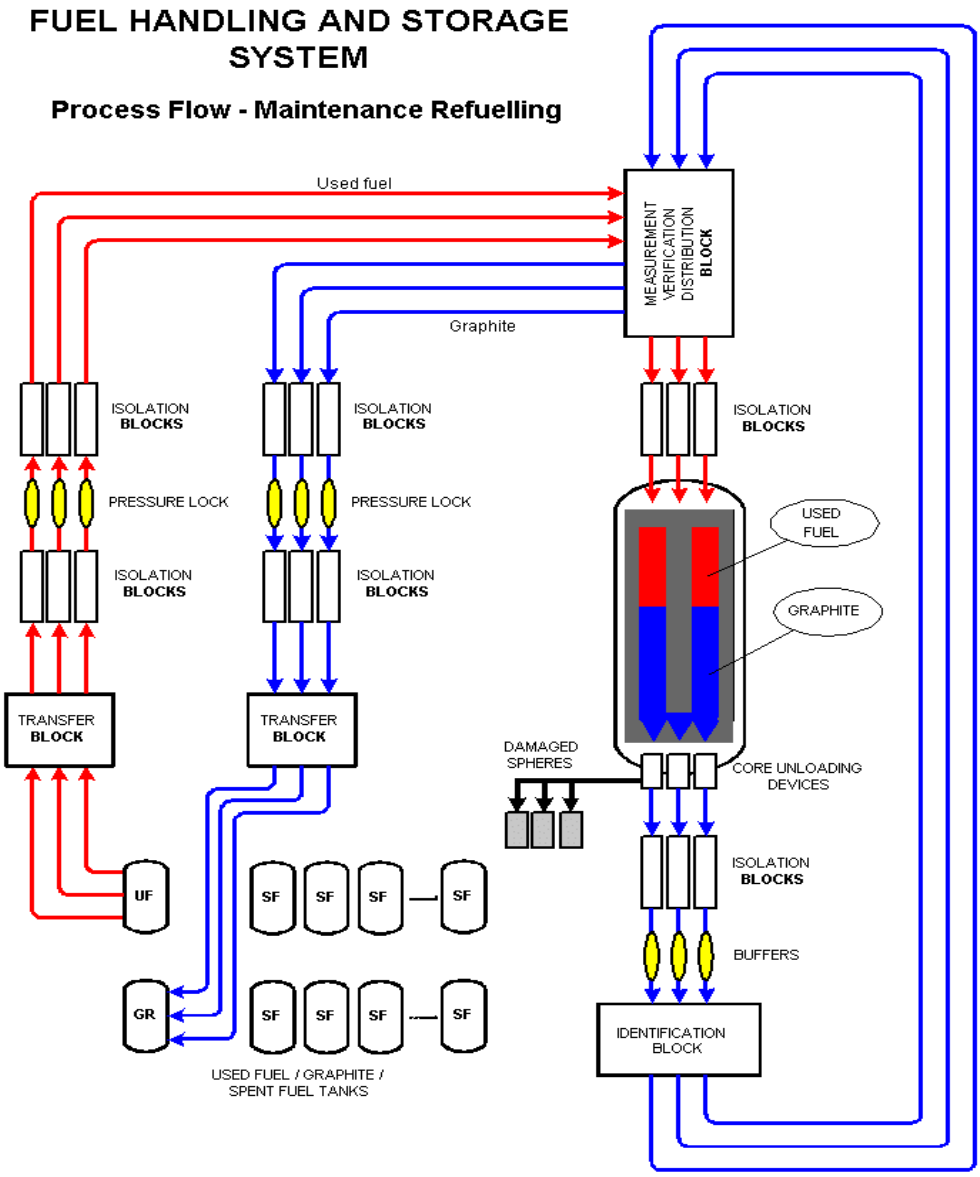

Figure 15.1-7: Core Reloading and Unloading of Graphite

15.1.1.4.1 Governing Portions of Title 10 of the Code of Federal Regulations

Following receipt, the fuel is handled, loaded, sorted, reloaded and unloaded by systems within the boundary of the reactor plant. As such, security for the fuel after receipt is governed by the same Rules as the reactor plant itself. That is, Parts 50 [15-3], 52 [15-4] and 73 of Title 10 of the Code of Federal Regulations apply to security of the fuel after receipt. Release or theft of fuel spheres, especially irradiated spheres, could directly or indirectly endanger the public health or safety by exposure to radiation. This release or theft of spheres could also lead to radiological sabotage.

15.1.1.4.2 Overall Security Acceptance Criteria

Both the transport and the handling and storage of fuel on site are governed by the appropriate portions of 10CFR. This regulation requires that following receipt of fuel on site, it will be handled and stored in a Vital Area. There are a number of rules that apply to the protection of Vital Areas, including (1) the number of boundaries one would have to cross to gain access, (2) the design robustness of the boundary itself to withstand a Design Basis Threat and the (3) assessment of its features against beyond design basis threats. Since the fuel handling and storage facilities are part of the power plant complex, they must have features similar to those addressed below for the Reactor Plant (Subsection 15.2).

15.1.1.4.3 Relationship to Reactor and Hydrogen Plant

There are two security aspects to the relationship of the fuel handling and storage facility to the hydrogen plant. The first aspect is the protection of the fuel facility from an intentional explosion of the hydrogen plant. The fuel facility must be able to withstand the expected pressure loading from the explosion and the resultant missiles. The second aspect is the access of personnel to the fuel handing facility from the hydrogen facility. The current PBMR NGNP philosophy for personnel separation is that special access must be granted for the fuel facility. That is, general worker access will be granted to those in the hydrogen facilities, but additional nuclear worker access must be granted for one to enter the fuel facility.

15.1.1.4.4 General Security Design Guidelines for PBMR Fuel Handling Facility

Rules of thumb and guidelines that, if followed, will make the fuel handling facility more secure are:

1. Treat the fuel handing facility as a Vital Area.
2. Consistent with life safety requirements, limit the number of access paths into the facility.

3. Provide for protection of response personnel.
4. Provide for access controls specific to the fuel handing facility.
5. Make the facility resistant to a large fire or explosion.
6. Ensure that spent fuel cooling is adequate following a beyond design basis threat event.

15.1.1.5 International Security Background

PBMR has developed a Safeguards Implementation Plan. This Plan was submitted to and accepted by the IAEA that has used it to generate their PBMR Safeguards Approach.

PBMR fuel safeguards implementation will be based on containment and surveillance measures, supplemented by fuel flow verification measurements, to and from difficult-to-access fuel strata locations such as the core fuel. The spent fuel strata will be verified using installed verification tubes alongside the tanks for insertion of gamma spectrometry. Temperature sensors will also be used to confirm the spent fuel height as well as the presence of fission products.

The verification of nuclear material at a nuclear facility is to provide confirmation of the inventory declaration by the PBMR operator by independent means. This verification will involve actions such as the physical counting of items and the confirmation that the items contain nuclear material as declared. Obviously, even in small facilities, the number of items could be large, and the above-mentioned activities could be time-consuming. To avoid this, sampling is done in a prescribed way with a certain detection probability. Then the required item identification and nuclear characterization are carried out on the selected samples.

The above-mentioned activities, in the case of the PBMR, are only possible for the verification of the fresh fuel. Once the fuel is loaded into the core and fission products are produced, direct access to the fuel, due to the design of the core, becomes impossible. Other methods will therefore have to be employed. It is anticipated that the core will possibly be designated by the IAEA as Difficult-to-Access, in which case the access routes or openings to or from the core have to be sealed, in conjunction with surveillance cameras providing a dual function. Most probably, an authenticated IAEA fuel counting system (fuel flow measurements), will also be acceptable, instead of the sealing system.

To some extent, the same is true for the spent fuel. However, this system is presently designed to provide an IAEA authenticated fuel counting system (fuel flow measurements) for the spent fuel discharged into the spent fuel tanks. In addition, a facility is provided, by means of which any of the tanks could be verified for the presence of plutonium via a multi-channel detector system inserted into a special access tube. Three tubes are provided for each tank, and when not in use, these tubes will be sealed with an IAEA sealing system.

From a nuclear material safeguards perspective, the flow of fuel and or graphite spheres to and from the core and the net removal of graphite spheres and loading them into the graphite storage tanks shall be monitored with flow monitoring at specific points in the system.

Physical Inventory Verification (PIV) will be carried out at yearly intervals, and the verification activities will be as follows:

Fresh fuel: For the fresh fuel, the containers will be counted and some containers will be selected on a random basis with a medium detection probability for Non Destructive Assay (NDA) measurements to confirm the presence of nuclear material.

Core fuel: For the core fuel, possibly designated by the IAEA as Difficult-to-Access, verification will be by evaluation of the seals, and fuel flow measurements and surveillance measures will also be employed.

Spent fuel: For the spent fuel, it may be more appropriate to use the access tubes for NDA verification as described above. In this case, tank(s) will then be selected on a random basis with medium detection probability for verification by NDA measurements to confirm that no unrecorded removal of nuclear material took place.

Damaged fuel spheres: Damaged fuel spheres will be separated in the Core Unloading Device (CUD) and stored in a cavity specially designed for this purpose and provided in the CUD. This material will be removed from this storage during a reactor outage and moved to a more permanent high-level storage specially designed for this purpose. Access to this storage is sealed with IAEA seals and the access is under surveillance. In addition, access tubes are provided for the insertion of NDA equipment similar to the methodology proposed for the spent fuel tanks.

Fuel spheres removed for research purposes: A facility is provided where fuel spheres can be removed from the FHSS for non-destructive and destructive research. These fuel spheres will be unloaded from the FHSS into a shielded container in a specially designed cell. Access to this cell will be sealed with IAEA seals and the cell will be under IAEA surveillance.

Schematic Diagram of Safeguards Support Measures

Figure 15.1-8 is a schematic diagram, which provides an integrated presentation of the fuel safeguards support measures to be employed in the PBMR DPP.

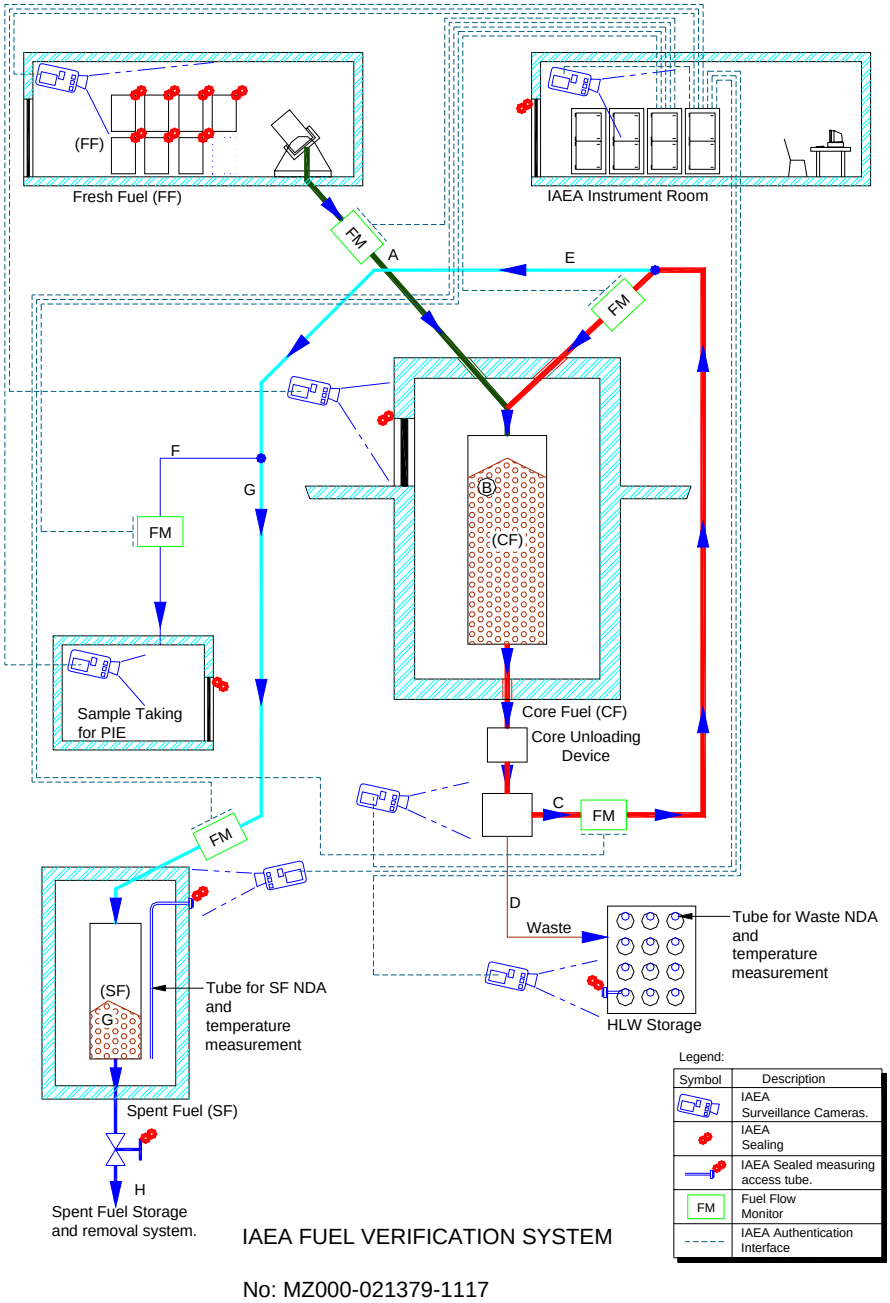

Figure 15.1-8: Schematic of Proposed IAEA Support Measures for the Application of Fuel Safeguards at PBMR

15.1.2 Nuclear Heat Supply Facility Security

From a security and safeguards perspective, the PBMR NGNP is unique in the United States for a power reactor. The site includes a continuous fuel handling process in addition to the power reactor itself and a hydrogen generation facility. The integration and melding of nuclear security with industrial security presents a new challenge and opportunity. However, the PBMR is inherently resistant to external threats due to the robust monolith citadel around the reactor, is passively safe and is a relatively small target. Today, it is subject to NRC security rules and regulations that were generated around light water reactors that are deployed or undergoing licensing at this time. Due to the inherent passive safety and robustness to external threat of the PBMR, Rule changes are envisioned that are more aligned with the capabilities of the PBMR. The decision of how to pursue Rule changes will be an outgrowth of conceptual design work to implement design features required to meet current requirements. In some cases, it will not make sense to implement a requirement established for light water reactors.

The final design deliverable in security is a physical security plan that is integrated with the physical design of the facility. The physical security plan is submitted by the plant owner/operator/licensee to the NRC. It is Safeguards Information and is a completion of the Security Plan template developed in cooperation between the Nuclear Energy Institute (NEI) and the NRC. This template is NEI 03-12 and is the basis for all Security Plans used in operating plants and those currently obtaining licenses. This Subsection is based upon the premise that the PBMR reactor, its fuel handing facility and the hydrogen generation facility are collocated, but are such that they can have different access controls for different areas of the total facility.

This Subsection describes general features of the PBMR based NGNP that make it resistant to the NRC and Rule defined Design Basis Threats (DBT). Although the DBT is safeguards, general good practice design features can be described. The security review process for AP1000 and operating plants provides the background for determining general good practice.

15.1.2.1 Governing Portions of Title 10 of the Code of Federal Regulations

Security for the NHS facility reactor plant is governed by Parts 50, 52 and 73 of Title 10 of the Code of Federal Regulations. Release or theft of fuel spheres, especially irradiated spheres, could directly or indirectly endanger the public health or safety by exposure to radiation. This release or theft of spheres could also lead to radiological sabotage.

Security, as defined by 10CFR73 [15-2], is the protection from radiological sabotage or protection from theft and diversion of special nuclear materials. It must be provided throughout the life cycle of nuclear power plant fuel. Additional, more detailed requirements are in 10CFR73:

"*Vital area* means any area which contains vital equipment.

> *Vital equipment* means any equipment, system, device, or material, the failure, destruction, or release of which could directly or indirectly endanger the public health or safety by exposure to radiation. Equipment or systems which would be required to function to protect public health and safety following such failure, destruction or release are also considered vital.
>
> [V]ital equipment must be located only within a vital area, and strategic special nuclear material must be stored or processed only in a material access area. Both vital areas and material access areas must be located within a protected area so that access to vital equipment and to strategic special nuclear material requires passage through at least three physical barriers. The perimeter of the protected area must be provided with two separated physical barriers with an intrusion detection system placed between the two. The inner barrier must be positioned and constructed to enhance assessment of penetration attempts and to delay attempts at unauthorized exit from the protected area. The perimeter of the protected area must also incorporate features and structures that prevent forcible vehicle entry. More than one vital area or material access area may be located within a single protected area.
>
> The physical barriers at the perimeter of the protected area shall be separated from any other barrier designated as a physical barrier for a vital area or material access area within the protected area.
>
> Unescorted access to vital areas . . . shall be limited to individuals who are authorized access to the material and equipment in such areas and who require such access to perform their duties.
>
> The licensee shall control all points of personnel and vehicle access into a protected area. Identification and search of all individuals for firearms, explosives, and incendiary devices must be made . . .”

The current working definition of “directly or indirectly endanger the public health or safety by exposure to radiation” includes releases from the site in excess of 10CFR100 [15-6] allowables, radiological sabotage and theft or diversion of formula quantities of special nuclear materials. Documented evidence of adequate protection is required during the licensing process. It must include description of design features to deny or delay unauthorized access of the Design Basis Threat (DBT) and the resistance to and mitigation of damage caused by beyond DBT. The DBT is enforced and defined in 10CFR73. The configuration of perimeter fencing and intrusion detection and the interior barriers will be developed in the conceptual design phase.

Beyond DBT requirements and guidelines are evolving as a result of the terrorist attacks of September 11, 2001. They include threats defined in the NRC’s Interim Compensatory Measures (ICMs) and refined in NRC audits and force-on force exercises of licensed plants and table top exercises of soon to be licensed plants. By the time PBMR NGNP is ready to be

licensed, the rules for beyond DBT, including resistance requirements for airplane crash will be codified.

15.1.2.2 Overall Security Acceptance Criteria

The plant design and defensive strategy will be reviewed against the DBT as required by 10CFR73. This review will include threat definitions, attack scenarios, target set definitions, defensive positions, delay features and access paths. Target sets are those sets of systems, structures or equipment that if compromised or used improperly will lead to radiological sabotage or theft or diversion of special nuclear materials. This means that, for PBMR, target sets may be found in the reactor building, the fuel handling facility and the control building. Fault tree analysis and probabilistic review of potential target sets is conducted to determine if they need to be considered. This review is a preliminary task for the conceptual design phase. The acceptance criterion is that no member of the DBT disables any target set to the point of release or sabotage.

The review is conducted by security professionals with a table top exercise. This effort is a virtual exercise in which the DBT is deployed against the plant security force and design features. A variety of assaults are conceived to ensure that there are no weak spots in the defensive strategy. From these table top exercises, as well as live force on force exercises at operating plants, many general guidelines have been developed. Some are delineated below.

15.1.2.3 General Description of Protected and Vital Areas

General practice has a number of barriers between the general public and vital equipment. From the outside in, they are: the Owner Controlled Area boundary, the Protected Area (PA) boundary, the delay fence, and the Vital Area (VA) boundary. Each has a level of increasing access control requirements. As each barrier is crossed, different access permission is required and personal searching is performed. Each barrier will have defined access ports for both pedestrian and vehicular traffic.

The Owner Controlled boundary is established by the licensee. Its requirements are established by the licensee to be consistent with general industrial or property security requirements. It may or may not have manned portals for access to the site. This boundary is beyond PBMR NGNP design scope.

The PA boundary has a variety of NRC requirements. Concurrent Homeland Security and good industrial practice requirements exist to have an access controlled boundary around the plant. The PA boundary is the first line of real detection and delay against the DBT. By current Rule, it must have intrusion detection and a vehicle barrier, but they need not be coincident. The intrusion detection system usually has at least two types of detection equipment. The barrier usually includes a nuisance fence to minimize intrusion alarms created by animals and debris. It has closed circuit television coverage. It has manned portals that are required to provide

controlled access, confirm access permissions and provide searches for weapons and explosives. This boundary must be beyond the blast distance of the DBT bomb(s) to the VA boundary with margin. For the PBMR NGNP, this boundary will deny access except to those with reason and clearance to be on the site. This provision includes workers with nuclear access permission and those without. It is anticipated that the hydrogen generation facility will be between the PA boundary and the delay fence.

The delay fence is simply a fence or other structure between the PA and VA boundaries designed to delay adversaries in their approach to the VA. In general, it is a fence with self actuated portals controlled by access control cards or the equivalent. All portions of the delay fence must be visible to the security force. For the PMBR NGNP, this boundary is also the demarcation between nuclear cleared workers and non-nuclear workers. The type of access control features required for this boundary can be determined by the licensee.

The Vital Area boundary is a limited access, hardened boundary that forms the final barrier to vital equipment or areas. For PBMR NGNP, the final determination of the extent of the boundary will be made after some conceptual design to determine preliminary target sets. Access control includes automatic, as well as, security officer features. The boundary includes security officer protection and response features. Current NRC practice is to require VA boundaries around vital equipment, the security central alarm station, the security secondary alarm station and the control room. The NGNP approach is to justify to NRC that the control room need not be within a Vital Area. The VA boundary must be resistant to the DBT definition inside the vehicle barrier.

15.1.2.4 General Descriptions of Design Basis Threats

The Design Basis Threat is imposed by 10CFR73 and is Safeguards Information. It is a definition of the team and its equipment for use in evaluating the threat resistance of a nuclear power plant. It defines the number and type of personnel within the DBT, both from inside and outside the facility. It defines the transportation equipment, weapons, explosives and other equipment that are part of the DBT. It defines allowable deployment of the DBT for evaluation.

The security assessment uses reasonable response parameters to determine the success of the design's defensive strategy, including the physical design's delay, denial and mitigation features.

15.1.2.5 Relationship of Reactor Plant to Fuel and Hydrogen Facilities

As stated above, the fuel handling facility is assumed to be within the same boundaries as the reactor plant. Preliminary details of the extent and location of the VA boundary will be established in conceptual design.

The hydrogen facility is envisioned to be within the PA boundary, but outside the delay fence. This arrangement will allow segregation of workers between the nuclear portion of the facility and the non-nuclear portion.

The security review will also include the evaluation of the effects of an intentional explosion and fire of the hydrogen facility on the reactor or fuel handling facilities.

15.1.2.6 General Security Design Guidelines

Rules of thumb and guidelines that, if followed, will make the reactor plant more secure are:

1. Define all Vital Areas.
2. Limit the number of access paths into the facility and the VA, consistent with life safety requirements.
3. Harden the VA boundary consistent with the DBT and table top results.
4. Provide for protection of response personnel.
5. Provide for access controls specific to the defense level of the area.
6. Make the facility resistant to a large fire or explosion.
7. Have clear fields of fire from areas inside the delay fence to the delay fence.
8. Ensure that spent fuel cooling is adequate following a to-be-determined beyond design basis threat event.
9. Establish a preliminary guard force that meets requirements of alarm station monitoring and threat response.

15.1.3 Overall Facility Beyond Design Basis Security Considerations

Following the attack of September 11, 2001, the NRC issued a number of Interim Compensatory Measures (ICMs) to better define the security requirements for operating nuclear plants. The bulk of these ICMs are Safeguards Information. The requirements in the ICMs cover a variety of security topics including plant physical design, access controls, guard force management and fitness-for-duty. The ICMs were developed to be consistent with the overall response to potential threats as coordinated by the United States Department of Homeland Security. This overall response strategy assigned different parts of the overall threat spectrum to different agencies such as the Department of Defense, the Department of Homeland Security, the Federal Bureau of Investigation, the NRC and others. The resultant DBT for nuclear power plants is discussed above in Subsection 15.1.2. To ensure a more comprehensive approach to security at nuclear power plants, the NRC asked licensees to assess their response and mitigation design features and response strategies to threats and consequences beyond the DBT. Examples of these scenarios are large fires and explosions and the loss of all spent fuel cooling.

The intent is to codify the ICMs into appropriate rules within Title 10 and associated regulations. At this time, the rule changes are still being refined and are evolving. In addition,

more specific requirements, like a defined airplane crash, are being developed. By the time PMBR NGNP is being licensed, a more definitive rule set for beyond DBT assessments will be issued. For now, the design team must assess the design against beyond DBT scenarios similar to those used in the evaluations of operating plants.

15.1.3.1 Governing Portions of Title 10 of the Code of Federal Regulations

At this time there are very few beyond DBT assessments required by Title 10. The industry assessments have been based upon the requirements in the post-9/11 ICMs.

15.1.3.2 Overall Beyond Design Basis Security Acceptance Criteria

The current beyond DBT assessments involve showing that inherent design or mitigation features in the design provide a reasonable best estimate assurance of no immediate release in excess of 10CFR100 limits for large fires or explosions or for loss of all spent fuel cooling. These scenarios are not deterministic.

15.1.3.3 General Beyond Design Basis Threat Descriptions

Large fires are defined as those greater than those established in a proper fire hazards analysis. These large fires can affect large portions of the plant, well in excess of those having their origin from on-site sources. No explicit mechanism is assumed for loss of all spent fuel cooling. The assumed starting point (for LWRs) is instantaneous loss of spent fuel pool water. [Note that the PBMR does not have spent fuel cooling water.]

Success is based upon an educated engineering judgment that the health and safety of the public are protected.

There is no defined airplane crash to be used for assessment in the United States today. There are defined airplane crash scenarios for plants in Europe. There were airplane crash assessments performed for operating plants in the United States by both EPRI and NRC. These assessments used different planes at different speeds. It is anticipated that NRC will define a standard plane and speed for beyond DBT assessments prior to licensing of a PBMR NGNP.

A feature of the PBMR NGNP that may result in additional beyond DBT assessments is the proximity of the hydrogen facility. This facility has some explosive potential and there may be assumptions of a threat scenario that exacerbates this explosive threat. The affect of the large hydrogen explosion will need to be assessed.

15.1.3.4 General Design Guidelines for Beyond Design Basis Security Threats

Rules of thumb and guidelines that, if followed, will make the reactor plant more resistant to beyond DBT are:

1. Maximize the inherent and passive safety of the plant.
2. Maximize separation of safety and defense-in-depth systems.
3. Ensure that alternate means of spent fuel cooling are available following a to-be-determined beyond design basis threat event.

15.1.3.5 Cyber Security

The requirements related to cyber security are contained in the Design Basis Threat (DBT) definition identified in Part 73 of Title 10 of the Code of Federal Regulations (10 CFR 73). The DBT itself is classified as Safeguards Information (SGI). The design of the NGNP will meet DBT cyber security requirements by proper computer system architecture design and spatial arrangement of the various computer network servers and workstations. This high level architecture and layout work will be included in conceptual design. The requirements are to design in separation of the protection, control, "business", security, maintenance, and other computer networks, as is done today for operating plants and for AP1000. Separation of the design for plant protection from external networks is also required and can be implemented at conceptual or detailed design.

15.2 SECURITY DESIGN INTEGRATION

Security Design Integration continues throughout conceptual, preliminary and final design. Nuclear power plant security professionals will review and comment on plant layout and operating philosophy to better position the design to pass a rigorous security assessment. The review will be based upon lessons learned in establishing proper security design features in operating plants and in the AP1000.

Inputs to the Security Design Integration task are:

1. Overall site layout of the entire facility
2. Placement of the PA and VA boundaries and the delay fence
3. Designation of all entry points to all buildings
4. Evaluation of the attack resistance of the VA boundary
5. Elevation views of buildings important to preventing radiological sabotage and controlling radiation release
6. Review of Vital Equipment, that is, the equipment required to maintain keff <0.95, maintain temperatures less than what would cause release, and maintain levels of defense against radiological sabotage or radiation release to the public.
7. Review of potential target sets
8. Review of defensive strategies
9. Review of the placement of security Alarm Stations and defensive positions

15.3 COMPLEXITY, RISK AND FUTURE STUDIES

15.3.1 Complexity and Risks

Inputs for Complexity and Risks:

1. PBMR specific safeguards and security criteria need to be developed to account for the relative inherent robustness of the PBMR design.
2. Consistent with the separation study identified in PCDR Section 10, the effect of a potential hydrogen explosion on the capability of the security system will need to be assessed.
3. Not including the Control Room within a Vital Area will need to be justified to the NRC.

15.3.2 Future Studies

Inputs for Future Studies:

1. Draft a Physical Security Plan
2. Draft a preliminary security assessment to evaluate the NGNP design against the DBT and against current beyond DBT.
3. Assess the current NRC rules, regulations and practices for security for amendment in the future to account for the relative inherent robustness of the NGNP design.
4. A limited number of designers and reviewers will be required to obtain clearances from the NRC to review and handle Safeguards Information (SGI).
5. The effect of a potential hydrogen explosion will need to be assessed in the context of Security implications.

REFERENCES

[15-1] Johan Slabber (PBMR), "PBMR Nuclear Material Safeguards", Presented at 2nd International Topical Meeting on High Temperature Reactor Technology (HTR 2004), Beijing, China, September 22-24, 2004.
[15-2] 10CFR73, "Physical Protection of Plants and Materials"; 20CFR73.55, "Requirements for Physical Protection of Licensed Activities in Nuclear Power Reactors Against Radiological Sabotage".
[15-3] 10CFR50, "Domestic Licensing of Production and Utilization Facilities".
[15-4] 10CFR52, "Early Site Permits; Standard Design Certifications; and Combined Licenses for Nuclear Power Plants".
[15-5] 10CFR74, "Material Control and Accounting of Special Nuclear Material".
[15-6] 10CFR100, "Reactor Site Criteria".

LIST OF ASSUMPTIONS

15.1 A white paper, "Physical Security Protection by Design," is planned for submittal to the NRC during the ongoing PBMR Design Certification Pre-application phase to explain the inherent resistance to attack of the PBMR design. It is assumed that this paper will serve to engage the NRC on the acceptance of PBMR-specific regulations regarding security.

APPENDICES

APPENDIX 15A FINAL DESIGN REVIEW PRESENTATION TO BEA

Section 15
Safeguards and Security

Sten Caspersson

Preconceptual Design Report
90% Design Review

May 8-10, 2007

P B M R

Westinghouse NGNP Team

Safeguards of the Fuel

- Reviewed pebble fuel transport and handling at the site.
- The fuel spheres are inherently resistant to being used for radiological sabotage (individual spheres, coated particles, chemically stable)
- Spheres will be transported by licensed carriers in the same manner as LWR fuel is transported today, in approved/licensed containers – expected to be 1000 spheres each.
- The procedure for fresh fuel receipt is based on draft PBMR DPP guidance. The steps guide the safety analysis, the design of the access to the NHSS Building, as well as the handling equipment to offload and replenish fresh fuel canisters. The processes and systems applied are resistant to sabotage.

Fuel Handling Safeguards

- The Fuel Handling and Storage System (FHSS) is used to do all the fuel handling operations within the PBMR plant (closed system).
- PBMR has developed a Safeguards Implementation plan. This plan was submitted to and accepted by the IAEA which have used it to generate their PBMR Safeguards Approach.
- PBMR pebble fuel safeguards implementation will be based on containment and surveillance measures, supplemented by fuel flow verification measurements, to and from difficult-to-access fuel strata locations such as the core fuel.

IAEA Measures for Fuel Safeguards

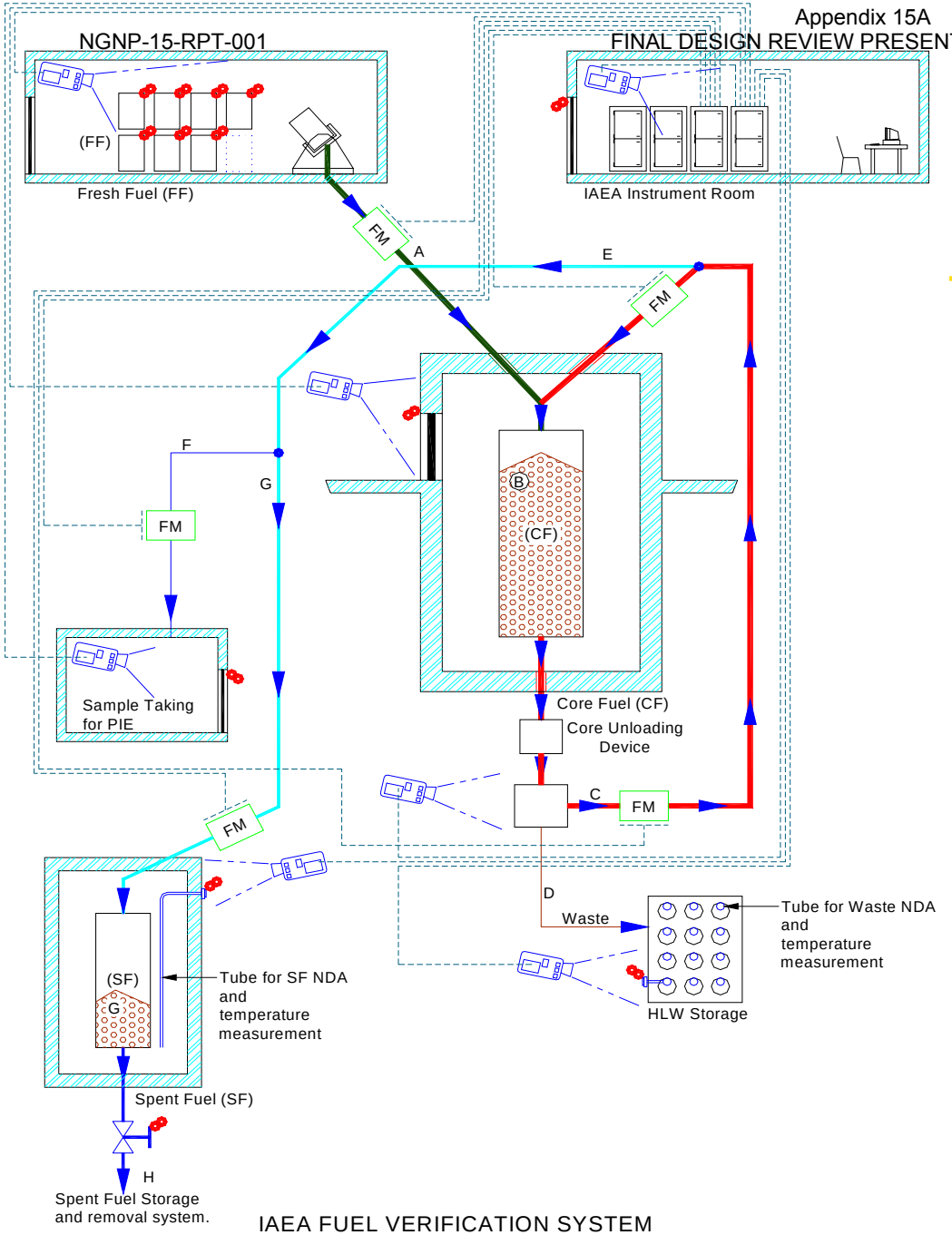

IAEA FUEL VERIFICATION SYSTEM

No: MZ000-021379-1117

Legend:

Symbol	Description
	IAEA Surveillance Cameras.
	IAEA Sealing
	IAEA Sealed measuring access tube.
FM	Fuel Flow Monitor
	IAEA Authentication Interface

Westinghouse NGNP Team

NHSF Safeguards and Security

- From a security and safeguards perspective, the NGNP is unique in the United States for a power reactor.
- The site includes a continuous PBMR fuel handling process in addition to the power reactor itself and a hydrogen generation facility.
- The integration and melding of nuclear security with industrial security presents a new challenge and opportunity.
- The PBMR is inherently resistant to external threats. It has a robust monolith around the reactor, is passively safe and is a relatively small target.

NHSF Safeguards and Security

- Today, PBMR NGNP is subject to NRC security rules and regulations that were generated around LWRs that are deployed or undergoing licensing at this time. Due to the inherent passive safety and robustness to external threat of the PBMR, rule changes that are more aligned with the capabilities of the PBMR will be pursued.
- PBMR NGNP site security is described in the Plant Layout, based on this initial assessment.

P B M R

Summary

- The PBMR NGNP was reviewed against current practice for operating reactors in the United States and the lessons learned while developing the Combined License Application for AP1000
- The PBMR design is inherently more resistant to attacks than light water reactor designs currently deployed and being licensed
- Current NRC rules and regulations and implementation guidance for security should be amended in the future to account for the inherent robustness of the PBMR design

NGNP-16-RPT-001 **May 2007**
Revision 0

NGNP and Hydrogen Production Preconceptual Design Report

SECTION 16: TECHNOLOGY DEVELOPMENT

Revision 0

APPROVALS

Function	Printed Name and Signature	Date
Author	Andrew C. Kadak Kadak Associates, Inc.	May 18, 2007
Reviewer	Scott Penfield Technology Insights, Inc.	May 18, 2007
Approval	Edward Brabazon Shaw Group	May 18, 2007

Westinghouse Electric Company LLC
Nuclear Power Plants
Post Office Box 355
Pittsburgh, PA 15230-0355

©2007 Westinghouse Electric Company LLC
All Rights Reserved

LIST OF CONTRIBUTORS

Name and Organization	Date
Peter Wells Shaw Group	May 2007
Scott Penfield Technology Insights	May 2007
Michael Correia PBMR	May 2007
Charles Bolthrunis Shaw Group	May 2007

BACKGROUND INTELLECTUAL PROPERTY

Section	Title	Description
NONE		NONE

REVISION HISTORY

RECORD OF CHANGES

Revision No.	Revision Made by	Description	Date
0	Andrew C. Kadak Kadak Associates, Inc.	Initial Issue	May 18, 2007

DOCUMENT TRACEABILITY

Created to support the following Document(s)	Document Number	Revision
NGNP and Hydrogen Production Preconceptual Design Report	NGNP-01-RPT-001	0

TABLE OF CONTENTS

LIST OF TABLES **16-8**

LIST OF FIGURES **16-9**

16 TECHNOLOGY DEVELOPMENT **16-10**

SUMMARY AND CONCLUSIONS **16-10**

INTRODUCTION **16-16**

16.1 OVERVIEW OF R&D APPROACH **16-17**

16.2 NUCLEAR HEAT SUPPLY SYSTEM **16-18**

16.2.1 TECHNOLOGY DEVELOPMENT FOR PBMR DPP PROJECT **16-18**

16.2.1.1 Test Facilities Utilized by PBMR 16-18
16.2.1.1.1 Pebble Bed Micro Model 16-18
16.2.1.1.2 Heat Transfer Test Facility (HTTF) 16-20
16.2.1.1.3 HELIUM TEST FACILITY 16-22
16.2.1.1.4 ASTRA 16-23
16.2.1.1.5 EXPERIMENTAL PLATE-OUT TEST FACILITY 16-24
16.2.1.1.6 NACOK 16-26
16.2.1.1.7 SANA 16-28
16.2.1.2 Neutronics Design Tools 16-29
16.2.1.3 Materials 16-30
16.2.1.4 16-30
16.2.1.5 Fuel Qualification 16-30
16.2.1.6 Core Structural Ceramics Qualification 16-30
16.2.1.7 Plant Control Design 16-31
16.2.1.8 FOAKE Design 16-32
16.2.1.9 Balance of Plant 16-33
16.2.1.10 Engineering Design Tools 16-33
16.2.1.11 Safety Analysis 16-34

16.2.2 DESIGN DATA NEEDS **16-35**

16.2.3 FUEL QUALIFICATION R&D PLAN **16-36**

16.2.3.1 Scope 16-36
16.2.3.2 Schedule 16-39
16.2.3.3 Manpower and Cost 16-41

16.2.4 CORE STRUCTURE CERAMICS – REFLECTOR GRAPHITE R&D **16-42**

16.2.4.1 Scope 16-42
16.2.4.2 Schedule 16-43
16.2.4.3 Manpower and Cost: 16-43
16.2.4.4 NHSS R&D Cost and Schedule Summary 16-45

16.3 HEAT TRANSPORT FACILITY **16-48**

16.3.1 DESIGN DATA NEEDS 16-48

16.3.2 INTERMEDIATE HEAT EXCHANGER (METALLIC) R&D PLAN 16-50
16.3.2.1 Scope 16-50
16.3.2.2 Schedule 16-52
16.3.2.3 Manpower and Cost 16-55

16.3.3 INTERMEDIATE HEAT EXCHANGER (CERAMIC/COMPOSITE) R&D PLAN 16-56
16.3.3.1 Scope 16-56
16.3.3.2 Schedule 16-58
16.3.3.3 Cost 16-58

16.3.4 SECONDARY HEAT TRANSPORT SYSTEM HELIUM MIXING CHAMBER R&D PLAN 16-59
16.3.4.1 Scope 16-59
16.3.4.2 Schedule 16-60
16.3.4.3 Cost 16-60

16.3.5 HIGH-TEMPERATURE DUCTS AND INSULATION 16-61
16.3.5.1 Scope 16-61
16.3.5.2 Schedule 16-62
16.3.5.3 Cost 16-62

16.3.6 SUMMARY R&D COST AND SCHEDULE FOR HEAT TRANSPORT FACILITY 16-63

16.4 HYDROGEN PRODUCTION FACILITY 16-65

16.4.1 DESIGN DATA NEEDS 16-65

16.4.2 BASIC DATA R&D PLAN 16-67
16.4.2.1 Scope 16-67
16.4.2.2 Schedule 16-67
16.4.2.3 Manpower and Cost 16-70

16.4.3 SUPPLEMENTARY MATERIALS R&D PLAN 16-71
16.4.3.1 Scope 16-71
16.4.3.2 Schedule 16-71
16.4.3.3 Manpower and Cost 16-71

16.4.4 FEED PURIFICATION R&D PLAN 16-74
16.4.4.1 Scope 16-74
16.4.4.2 Schedule 16-74
16.4.4.3 Manpower and Cost 16-74

16.4.5 DECOMPOSER R&D PLAN 16-77
16.4.5.1 Scope 16-77
16.4.5.2 Schedule 16-78
16.4.5.3 Manpower and Cost 16-78

16.4.6 SULFURIC ACID CONCENTRATOR AND SULFUR DIOXIDE ABSORBERS R&D PLAN 16-82
16.4.6.1 Scope 16-82

16.4.6.2 Schedule 16-82
16.4.6.3 Manpower and Cost....16-82

16.4.7 ELECTROLYZER R&D PLAN 16-85
16.4.7.1 Scope 16-85
16.4.7.2 Schedule 16-86
16.4.7.3 Manpower and Cost....16-86

16.4.8 PRODUCT PURIFICATION AND INSTRUMENT AND CONTROLS R&D PLAN 16-89
16.4.8.1 Scope 16-89
16.4.8.2 Schedule 16-89
16.4.8.3 Manpower and Cost....16-89

16.4.9 SUMMARY R&D COST AND SCHEDULE FOR HYDROGEN FACILITY ...16-93

16.5 POWER CONVERSION FACILITY 16-94

16.5.1 DESIGN DATA NEEDS FOR THE POWER CONVERSION FACILITY 16-94

16.5.2 STEAM GENERATOR R&D SCOPE 16-96

16.5.3 COST AND SCHEDULE SUMMARY 16-97

16.5.4 SUMMARY TECHNOLOGY DEVELOPMENT COST AND SCHEDULE FOR POWER CONVERSION FACILITY 16-99

16.6 PLANT LEVEL 16-100

16.6.1 DESIGN DEVELOPMENT NEEDS....16-100

16.6.2 TECHNOLOGY DEVELOPMENT PLANS 16-100

16.7 REGULATORY RESEARCH PLAN....16-100

16.8 INTEGRATED TECHNOLOGY DEVELOPMENT PLAN - COST & SCHEDULE ..16-101

16.8.1 COSTS 16-101

16.8.2 SCHEDULE 16-101

16.9 ENHANCING R&D SCOPE 16-103

16.9.1 ADVANCED FUEL DEVELOPMENT....16-103

16.9.2 ADVANCED FUEL MANUFACTURING 16-103

16.9.3 ADVANCED FUEL CYCLE INVESTIGATIONS 16-104

16.9.4 DESIGN AND EVALUATION MODEL VERIFICATION AND VALIDATION 16-104

16.9.5 FUNDAMENTAL PROPERTIES OF NUCLEAR GRAPHITE 16-105

16.9.6 HIGH TEMPERATURE HEAT TRANSPORT VIA LIQUID SALT 16-106

REFERENCES....16-107

LIST OF ASSUMPTIONS....16-108

APPENDICES 16-109

APPENDIX 16A BIBLIOGRAPHY 16-109

APPENDIX 16B FINAL DESIGN REVIEW PRESENTATION TO BEA.....16-112

LIST OF TABLES

Table 16.2-1: R&D Supporting Neutronics Design Tools 16-29
Table 16.2-2: Materials R&D 16-30
Table 16.2-3: Core Structural Ceramics R&D 16-31
Table 16.2-4: Plant Control R&D 16-32
Table 16.2-5: First-of-a-Kind Components R&D 16-32
Table 16.2-6: Balance of Plant R&D 16-33
Table 16.2-7: Engineering Design Tools R&D 16-34
Table 16.2-8: Safety Analysis R&D 16-34
Table 16.2-9: Nuclear Heat Supply System DDNs 16-36
Table 16.2-10: Normal Operation Irradiation Requirements for NGNP Fuel 16-37
Table 16.2-11: Fuel R&D Cost 16-41
Table 16.2-12: Reflector Graphite R&D Cost 16-45
Table 16.3-1: Heat Transport System DDNs 16-49
Table 16.3-2: Metallic IHX R&D Cost 16-55
Table 16.3-3: Ceramic/Composite IHX R&D Cost 16-59
Table 16.3-4: SHTS Helium Mixing Chamber R&D Cost 16-60
Table 16.3-5: HTS Ducts and Insulation R&D Cost 16-63
Table 16.4-1: Hydrogen Production System DDNs 16-66
Table 16.4-2: Basic Data Costs 16-70
Table 16.4-3: Supplementary Materials R&D Cost 16-72
Table 16.4-4: Feed Purification R&D Cost 16-75
Table 16.4-5: Decomposer R&D Cost 16-79
Table 16.4-6: Concentrator and Absorber R&D Cost 16-83
Table 16.4-7: Electrolyzer R&D Costs 16-87
Table 16.4-8: Product Purification and Instrument and Controls R&D Costs 16-90
Table 16.5-1: Steam Generator Design Data Needs 16-95
Table 16.5-2: Major R&D Tasks to Satisfy Data Needs 16-96
Table 16.5-3: Steam Generator DDN Cost Summary 16-98
Table 16.8-1: Integrated NGNP R&D Cost by Year 16-101

LIST OF FIGURES

Figure 16.2-1: Solid model of the PBMM 16-19
Figure 16.2-2: PBMM 16-19
Figure 16.2-3: High Pressure Test Unit 16-21
Figure 16.2-4: High-temperature Test Unit 16-21
Figure 16.2-5: Pictures of the Helium Test Facility (HTF) 16-23
Figure 16.2-6: ASTRA Critical Facility 16-24
Figure 16.2-7: Main Components of the Experimental Plate-out Loop 16-25
Figure 16.2-8: Main Components of the Isopiestic Plate-out Facility 16-26
Figure 16.2-9: Layout of NACOK Experiment 16-27
Figure 16.2-10: Layout of the NACOK Experiment 16-27
Figure 16.2-11: Layout of the SANA Experiment 16-28
Figure 16.2-12: R&D Schedule – Fuel 16-40
Figure 16.2-13: R&D Schedule – Reflector Graphite 16-44
Figure 16.2-14: Summary NHSS Development Schedule and Cost 16-47
Figure 16.3-1: R&D Schedule – Metallic IHX 16-54
Figure 16.3-2: R&D Schedule - Ceramic IHX 16-57
Figure 16.3-3: R&D Schedule – Mixing Chamber 16-60
Figure 16.3-4: R&D Schedule – Ducts and Insulation 16-62
Figure 16.3-5: Integrated R&D Schedule and Cost for HTS 16-64
Figure 16.4-1: R&D Schedule - Basic Data 16-69
Figure 16.4-2: R&D Schedule - Supplementary Materials 16-73
Figure 16.4-3: R&D Schedule - Feed Purification 16-76
Figure 16.4-4: R&D Schedule - Decomposer 16-81
Figure 16.4-5: R&D Schedule - Sulfuric Acid Concentrator and Sulfur Dioxide Absorbers 16-84
Figure 16.4-6: R&D Schedule - Electrolyzer 16-88
Figure 16.4-7: R&D Schedule - Product Purification and Instrumentation and Controls 16-92
Figure 16.4-8: Integrated R&D Schedule and Cost for Hydrogen Plant 16-93
Figure 16.5-1: Steam Generator Development R&D Schedule 16-99
Figure 16.5-2: Integrated Schedule and Cost for the Power Conversion System 16-100
Figure 16.8-1: Integrated NGNP R&D Schedule 16-102

16 TECHNOLOGY DEVELOPMENT

This section summarizes the Technology Development (Research and Development (R&D)) Plan for the PBMR NGNP. Included in this Plan is the highest-priority enabling technology development activities, which are incremental to the PBMR Demonstration Power Plant (DPP) Project and required for the design, licensing, construction and operation of the NGNP. In developing this Plan, the approach was to challenge the lead engineers of the major facilities – Nuclear Heat Supply System, Heat Transport System, Power Conversion System and Hydrogen Production System - to identify Design Data Needs (DDNs) for the "enabling" technologies, as noted in previous sections. Drawing from related technology development resources, the lead engineers then developed R&D plans that respond to the DDNs with appropriate scope, schedule and estimated costs. Presented in this section are the integrated results of these R&D plans.

SUMMARY AND CONCLUSIONS

The PBMR NGNP technology development plans have been developed in response to DDNs that were identified in the course of developing the NGNP preconceptual design. The technology development plans are based on a 2018 operational date for the NGNP. Many of these plans are driven by the procurement requirements for the respective components and require significant early R&D as a basis for completing the design of these components, since some have yet to be built and tested. The critical path components include the Intermediate Heat Exchanger (IHX), several components in the Hybrid Sulfur-based Hydrogen Production System, including the electrolyzer and decomposer, and the high-temperature Steam Generator (SG) of the Power Conversion System (PCS). Confirmatory testing of the fuel and graphite must be started as soon as possible, since demonstration that the fuel and graphite are capable of the extended operating envelope of the NGNP compared to the PBMR DPP is critical for early licensing acceptance. Most critical is the fuel. Early fuel spheres from a production-scale coater will be available from Pebble Bed Modular Reactor (Pty) Ltd. in early 2008 for characterization and pre-qualification testing and full production spheres will be available by 2012 for qualification testing.

It is noted that the technology development plans for the PBMR NGNP have focused on the "enabling" technologies which are considered essential in order to meet the NGNP schedules and hence the highest priority for funding. Further, these enabling technologies are incremental to the extensive past and ongoing R&D effort by PBMR (Pty) Ltd. in South Africa and at other research institutions around the globe to support the design and licensing of the PBMR DPP and the PBMR Pilot Fuel Plant. The differences in the design have been identified in the NHSS and Fuel sections and the corresponding enabling DDNs are focused on addressing those differences.

To date, over $500 M has been invested in the overall DPP Project. Preliminary estimates of the past and forward investments related to the PBMR NHSS and fuel development and tests related to the fuel production facilities that serve to offset costs otherwise required for the PBMR NGNP are in the range of $750 M. The incremental enabling technology development for the NHSS and Fuel are addressed in this section and the other incremental costs are addressed in Section 19.

The total incremental enabling Technology Development effort foreseen for the PBMR NGNP is in the range of $ 184 M (2007$) and will take about 8 years to complete. The overall summary schedule and cost for Technology Development is shown in Figure ES-19 and Table ES-3. Enhancing technology development candidates are also identified that need to be considered for product improvements and/or risk reduction.

As elaborated in Section 19, the cost estimates presented in this PDCR are considered "mean" or "expected" values whereby there is a 50% weighted probability of the actual costs being a higher or lower. As appropriate, contingencies are included to achieve the expected value. Further, a percent range of high-to-low confidence is provided at the summary level in Section 19 to represent the relative degree of uncertainties.

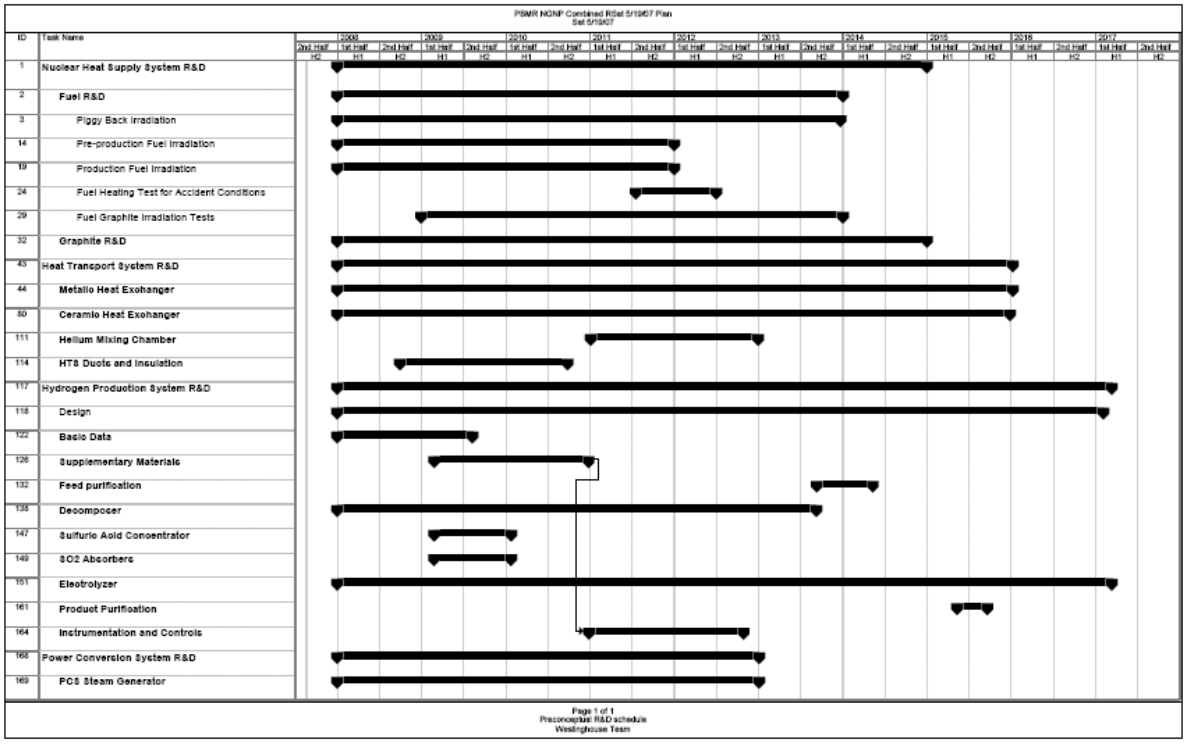

Figure 1: Overall Technology Development Schedule

Table 1: Technology Development Cost

	FY2008	FY2009	FY2010	FY2011	FY2012	FY2013	FY2014	FY2015	FY2016	FY2017	TOTAL
Nuclear Heat Supply System											
Fuel	0.5	4.5	6.5	6.5	6.5	5.5	3.5	3.5	3.5	4.5	45.0
Reflector Graphite	0.5	0.6	0.8	0.8	0.7	0.9	0.7				5.0
Subtotal	1.0	5.1	7.3	7.3	7.2	6.4	4.2	3.5	3.5	4.5	50.0
Heat Transport System											
Metallic IHX	3.9	6.9	6.0	2.0	0.3						19.0
Ceramic IHX	3.6	6.6	5.2	4.5	4.3	4.3	0.6	0.6			29.6
HTS Other	0.4	1.1	0.8	1.1	1.1						4.5
Subtotal	7.8	14.6	11.9	7.6	5.7	4.3	0.6	0.6			53.1
Hydrogen Facility											
Basic Data	1.0	0.3									1.3
Materials		3.3	2.7								6.0
Feed Purification				0.8							0.8
Decomposer	2.9	3.0	2.2	2.1	5.2	3.1					18.4
Concentrator and Absorber		1.1									1.1
Electrolyzer	1.6	2.6	2.8	3.4	4.4	3.2	8.1	2.8			29.0
Product Purification + Sensing and Control				1.3	0.14			0.2			1.7
Subtotal	5.5	10.3	7.8	7.6	9.7	6.3	8.1	3.1			58.4
Power Conversion Facility											
Steam Generator R&D	0.6	4.1	7.3	7.7	2.8						22.5
Total Technology Development	**14.9**	**34.1**	**34.3**	**30.2**	**25.5**	**16.9**	**13.0**	**7.2**	**3.5**	**4.5**	**184.0**

Table 2
Summary of Technology Development Costs

	Cost	Start	Finish
Nuclear Heat Supply System			
• *Fuel Development - Additional Irradiation Tests*	*$ 45 M*	*08*	*17*
• *Graphite - covers higher fluence temperature*	*$ 5 M*	*08*	*11*
	$ 50 M		
Heat Transport System			
• *Intermediate Heat Exchanger Metallic*	*$ 19 M*	*08*	*12*
• *Ceramic Heat Exchanger*	*$ 29.6 M*	*08*	*15*
• *HTS Other*	*$ 4.5 M*	*08*	*12*
	$ 53.1 M		
Hydrogen Facility			
• *Hydrogen Plant Components*	*$ 48.6 M*	*08*	*15*
• *Product Purification*	*$ 0.8 M*	*11*	*13*
• *Sensing and Control*	*$ 1.7 M*	*11*	*15*
• *Other materials*	*$ 7.3 M*	*09*	*10*
	$ 58.4 M		
Power Conversion Facility			
• *Steam Generator R&D*	*$ 22.5 M*	*08*	*12*
Total Technology Development	***$ 184 M***		

Nuclear Heat Supply System

Fuel Irradiation

DDNs have identified the need for additional fuel irradiation capsules that will provide confirmation of meeting the extended performance envelope of the NGNP and assure an adequate statistical database for the design and licensing efforts. It will require additional data covering the increased fluence and burnup, plus the operating and limiting accident temperatures of the reference UO_2 fuel. Burnups as high as 109 MWD/Mt are to be tested at peak operating temperatures of 1300 C, with peak temperatures during transients of 1800 C. Budget estimates are subject to irradiation facility plans and overall cooperative arrangements. The PBMR baseline plans assume continued use of the Russian IVV-2M test reactor. In the near-term, process qualification fuel particles and spheres made with prototypical production equipment need to be characterized, including unirradiated fuel data and initial irradiated fuel data to confirm production specifications. This fuel will be available in 2008, and presents a mutual opportunity for INL and PBMR (Pty) Ltd. to collaborate on such efforts that will help develop needed experience at INL/ATR and perhaps other facilities. Assuming a collaborative INL/PBMR fuel qualification program, a preliminary budget allowance for incremental fuel development is $45 M. Pilot plant production fuel for such capsules is projected to be available in the 2012 timeframe, and the baseline schedule for supplemental testing requires about 6 years.

Graphite

DDNs for the incremental graphite qualification program for the NGNP address gaps in data covering the fluence-temperature operating range at both low and high temperatures. In order to take mutual advantage of PBMR's ongoing program to qualify SGL graphite, plus INL's and PBMR's mutual interests to cooperate on graphite qualification with SGL and Graftek, efforts are underway to develop a collaborative INL/PBMR program. Priority activities in FY2008 include continued planning and preparation for the initiation of capsule irradiation tests at INL/ATR. Assuming, a collaborative INL/PBMR graphite qualification program, a preliminary allowance for the budget is $5 M.

Heat Transport System

Intermediate Heat Exchanger

The IHX is a critical component of the NGNP and a fundamental enabling technology for high-temperature process heat applications in general. The IHX requires a significant development effort, largely in the materials area, to demonstrate that a design can be developed for the high temperatures, pressures and transients expected for the NGNP. Parallel efforts are recommended that address the most promising metallic and ceramic materials. The results will support an ASME code case and a final design for the IHX that will need to be prototyped and tested. The total cost for IHX development is estimated to be $53 Million, which includes

$10.25 M for an IHX test facility at INL. The IHX technology development is projected to take about 8 years to complete.

Hydrogen Production Plant

The Hybrid Sulfur (HyS) process has been selected as the initial reference hydrogen production technology for the NGNP preconceptual design, on the basis that it has the best chance of early commercial deployment. However, the HyS technology poses significant research and development challenges. While the process has been demonstrated on a laboratory scale, converting the laboratory performance into a production plant requires significant R&D in the areas of basic thermo-chemical reaction and kinetic data and the development of key components, including the decomposer and electrolyzer, followed closely by the sulfuric acid concentrator and SO_2 absorber. The total technology development cost is $58 M which includes a pilot plant to test individual components, system dynamics and the effect of low levels of impurities on sensitive components. The scope of the R&D effort described herein is only a rough first estimate. With additional design, research, and study work, the scope may change in important ways. Development related to materials of construction appears at this point to be the most important source of risk.

Power Conversion System

The power conversion cycle chosen for the NGNP is a Rankine cycle, requiring a steam generator. While helium-to-steam generators have been previously built, the NGNP Steam Generator requires incremental development, due to its larger size and the increased helium temperatures that would be present under some operating conditions. Since the Steam Generator is a long lead time procurement component, key elements of the Steam Generator Technology Development Program need to be started no later than FY 2009. Significant prototype testing is also included in the technology development plans. The total cost of the Steam Generator technology development is $22.5 M, and will take 5 years to complete.

Enhancing Technology Development Opportunities

As previously noted, the NGNP Technology Development Plan, described herein, is incremental to the presently ongoing PBMR DPP R&D effort and includes enabling technology development only. In this context, the term “enabling technology development” refers to the minimum required to design license and operate the NGNP. Although not specifically scoped, scheduled or estimated in this plan, “enhancing technology” development opportunities were identified that would be useful for long term research to enhance the performance of the PBMR NGNP and/or further reduce cost and risk, particularly in follow-on commercial applications. Areas in which enhancing technology development opportunities were identified include:

1. Advanced Fuel Development
2. Advanced Fuel Manufacturing
3. Advanced Fuel Cycle Investigations

4. Design Code Verification & Validation Collaboration
5. Graphite Development and Characterization
6. Liquid Salt Heat Transport Media

It should be noted that the Technology Development needs for other process heat applications have not been included and will be the subject of future special studies.

INTRODUCTION

This section summarizes the Technology Development Plan for the Next Generation Nuclear Plant (NGNP). This NGNP Technology Development Plan identifies the highest-priority enabling research and development (R&D) activities that will enable the NGNP, as conceived by the Westinghouse Team, to be designed, licensed, constructed and operated. In addition, enhancing technology development activities have been identified and described herein, but are not included in the present Technology Development Plan.

The structure of the NGNP Technology Development Plan is centered on the major facilities needed for the production of hydrogen and electricity. In this context, a facility includes a major system and the associated buildings and structures. Each facility's technology development activities are addressed in the relevant section. The reason for structuring the plan on the basis of the facilities is to identify focused R&D that would support the ability to actually design and build the facilities in question, as opposed to general groupings, such as materials, which would cover many needs over many facilities. The facilities for which high-priority enabling technology development tasks have been identified are:

- Nuclear Heat Supply System Facility, including Fuel
- Heat Transport Facility
- Hydrogen Production Facility
- Power Conversion Facility

The overall NGNP Technology Development Plan is based on inputs from cognizant engineers engaged in developing key elements of the above facilities. For each of the respective facilities, DDNs have been defined by the lead engineers and documented in the respective design sections of this Preconceptual Design Report (PCDR). Drawing from the related resources, the lead engineers have also developed the respective facility-level Technology Development Plans, including a high level scope definition, cost and schedule. These inputs have been incorporated within the overall NGNP Technology Development Plan documented in this Section.

16.1 OVERVIEW OF R&D APPROACH

Technology Development (R&D) for the NGNP is summarized in this section. This NGNP Technology Development Plan was developed concurrently with the process of developing the pre-conceptual design. The engineers working on the various facilities identified DDNs which required research and development to successfully accomplish the objectives of the facility they were conceptualizing. These DDNs took full advantage of technology development and research currently underway in the US, South Africa and other nations to the extent that such information was available. The best source of current R&D was provided by the PBMR Demonstration Power Plant (DPP) Project, which is now in active design and licensing within South Africa. Credit was taken for much of their R&D to limit the Technology Development needs of the NGNP. Note that the R&D defined herein is the minimum high-priority enabling R&D, incremental to that of the PBMR DPP, that will support the design, licensing, construction and operation of the PBMR NGNP. Once the DDNs were established, the engineers were asked to develop high level scope, cost and schedules for research responding to each of the DDNs

In order to effectively manage the breadth of the Technology Development needs and focus those to assess the impacts on key elements of the NGNP, it was decided to bin the needs by "facilities" or generically topical areas. In this context, facilities include major systems, plus related buildings and structures. This list of facilities is:

- Nuclear Heat Supply System Facility - the basic heat source
- Heat Transport Facility - the means to transfer the heat to the point of use
- Hydrogen Production Facility – the means for producing hydrogen, using energy from the reactor, including the Process Coupling Heat Exchanger
- Power Conversion Facility - the electric generating plant including the Steam Generator
- Site and Balance of Plant
- Fuel Manufacturing Plant

Of the above facilities, high-priority enabling R&D was identified in support of the first four and addressed herein. Enhancing R&D has been identified for all of the above categories, with the exception of the Site and Balance of Plant.

During Conceptual Design, a Regulatory Technology Development Plan is envisioned that will focus on the related R&D under the purview of the NRC. The content will be a subset of the overall Technology Plan as initiated herein.

16.2 NUCLEAR HEAT SUPPLY SYSTEM

16.2.1 Technology Development for PBMR DPP project

This section provides a brief overview of the completed, ongoing and future research and development activities performed for the PBMR DPP to be built at Koeberg, South Africa. The technology development work performed in support of the PBMR DPP is taken into account in the Technology Development Plan for the NGNP.

16.2.1.1 Test Facilities Utilized by PBMR

This section provides information regarding experimental tests planned and/or completed for the PBMR DPP.

16.2.1.1.1 Pebble Bed Micro Model

16.2.1.1.1.1 Purpose

The purpose of the Pebble Bed Micro Model (PBMM) was to demonstrate the concept and controllability of the PBMR three-shaft recuperated closed Brayton Cycle. The PBMM was also utilized to demonstrate the Flownex computer code's ability to accurately predict the dynamic behavior of the system.

The first phase of the PBMM project was to prove the feasibility of a three-shaft recuperative Brayton cycle. The next phase in the PBMM project was to gather experimental data for the verification and validation (V&V) of Flownex. During this phase, all instrumentation was calibrated to traceable standards to ensure reliable experimental data.

16.2.1.1.1.2 Description

The PBMM is a fully functional model of the earlier three-shaft Power Conversion Unit (PCU) of the PBMR, a predecessor of that currently under development in South Africa. Flownex was used extensively in the design of the PBMM and the prediction of its performance.

The PBMM is based on the Brayton power cycle (as used in aircraft engines) but with the following distinguishing features:

- It uses nitrogen as the working fluid.
- The gas moves around in a closed circuit, which implies that no nitrogen is consumed in the power generation process – it merely acts as an energy carrier.
- The PBMM uses single stage centrifugal compressors and turbines. It makes use of three separate shafts, one for the high-pressure (HP) compressor/turbine pair, one for

the low-pressure (LP) compressor/turbine pair and one for the power turbine (PT) and generator. This allows the HP and LP compressor/turbine pairs to run at high speeds thereby reducing the size and therefore also the cost of the machines.

- It makes use of a recuperator to recover heat that would otherwise have been rejected to atmosphere. The recovered heat is transferred elsewhere in the system thereby reducing the heat required from the heat source and ultimately increasing thermal efficiency.
- The generator is emulated by a load compressor connected to a power dissipation loop consisting of a flow control valve and a heat exchanger. Variations in load are effected by increasing or decreasing the pressure level in the load rejection loop.

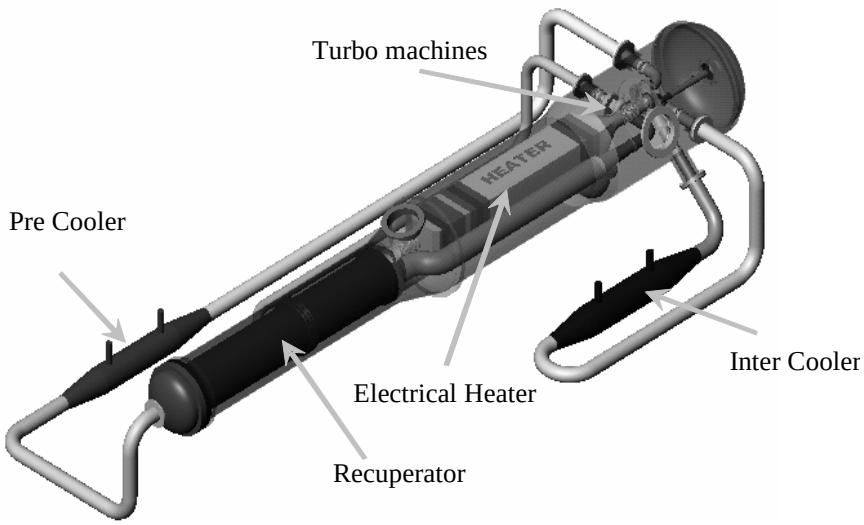

Figure 16.2-1: Solid model of the PBMM

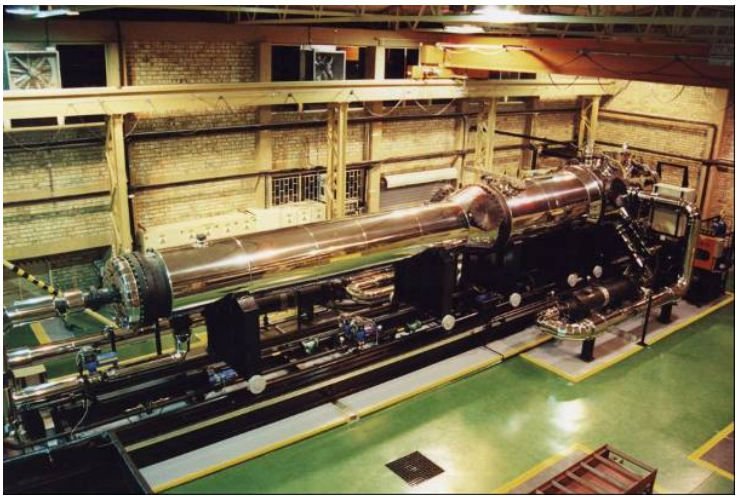

Figure 16.2-2: PBMM

16.2.1.1.2 Heat Transfer Test Facility (HTTF)

16.2.1.1.2.1 Purpose

The purposes of the Heat Transfer Test Facility (HTTF) are:

- To validate the correlations that are currently used to model the relevant heat transfer and fluid flow phenomena required for the integrated simulation of the pebble bed core, via a comprehensive set of separate effects tests.
- To generate results that may be used to validate the different simulation methodologies applied in integrated models that represent the entire pebble bed core, via a comprehensive set of integrated effects tests.

16.2.1.1.2.2 Description

The HTTF facility will consist of a number of smaller test sections that will be used for separate effects tests and a main test section that will be used to perform integrated effects tests. The smaller test sections will consist of a scaled down pebble bed and a number of duct-type sections packed with pebbles to represent pebble bed sections with predetermined homogeneous porosities. The main test section will represent an annular pebble bed and it will have the capability to heat the pebble bed (made up of graphite pebbles) and to characterize the heat transfer behavior of such a pebble bed.

It is envisaged that the HTTF shall fulfill the needs for tests to characterize the following main phenomena required for simulating heat transfer in a pebble bed:

- Pebble bed effective conductivity, which is a combined coefficient representing conductive and radiation heat transfer, required at the pebble bed centre region and wall regions respectively.
- Convection heat transfer coefficient required at the pebble bed centre region and wall regions respectively.
- Pebble bed pressure drop correlation.
- Braiding effect correlation, which defines the mixing effect of gas flowing through a pebble bed.
- Natural convection heat transfer coefficient.

The test facility will consist of two units: the High Pressure Test Unit (HPTU), and the High Temperature Test Unit (HTTU).

Figure 16.2-3: High Pressure Test Unit

Figure 16.2-4: High-temperature Test Unit

16.2.1.1.3 HELIUM TEST FACILITY

16.2.1.1.3.1 Purpose

The Helium Test Facility (HTF) was designed to develop and test components and sub-systems of the PBMR Main Support Systems (MSS) and other PBMR Components. It is a risk mitigation initiative for testing these components and systems in a helium environment at high pressure and high temperature but without nuclear radiation.

16.2.1.1.3.2 Description

The HTF is situated at the Pelindaba site close to Centurion. It consists of blowers, valves, heaters, coolers, recuperator and other components that allow articles to be tested at pressures up to 9 MPa and temperatures to 1100°C. The facility consists of a totally enclosed 40m high (8 levels) test tower with a 10m x 13m footprint and a 20 ton overhead crane with a passenger lift (ground - level 6). The facility is designed to accommodate 5 independent process streams, with each able to operate at up to 9MPa, 50ºC - 580ºC (1100ºC local) and up to 2kg/s.

The facility features a main loop with major components including a Helium Blower, 4 Main Electrical heaters, 1 Filter, 3 Air coolers, 1 Recuperator, 1 Helium purification system and 1 Helium compressor. The following test setups are to be performed in support of the PBMR DPP:

a. Reserve Shutdown System (RSS) test setup
b. Reactivity Control System (RCS) test setup
c. Fuel Handling System (FHS) test setup
d. Blow down test setup
e. Laboratory

The Main Loop, HICBS (Helium Inventory Control and Blow down System) and Auxiliaries have been successfully constructed, installed and commissioned up to 9 MPa and 280°C. The RSS, RCS and FHS have been successfully constructed and installed. Installation was done in just over 7 months and the facility is currently running 24 hours/day.

Figure 16.2-5: Pictures of the Helium Test Facility (HTF)

16.2.1.1.4 ASTRA

16.2.1.1.4.1 Purpose

The purpose of tests done in the ASTRA facility is experimental investigation of neutronics characteristics of a reactor with geometrical characteristics similar to the PBMR reactor.

16.2.1.1.4.2 Description

The ASTRA critical facility Figure 16.2-6 represents a cylindrical side reflector consisting of graphite blocks with an octagon shaped core in the centre and a solid cylindrical centre column. The core is filled with fuel spheres and absorber spheres. Control rods, shutdown rods and a single regulating rod are situated in the first set of blocks closest to the core in the side reflector. This allows different critical configurations to check single control rod reactivity worth's or different combinations to look at interference (or shadowing) effects and permits better V&V of control rod models and methods used in the analysis tools.

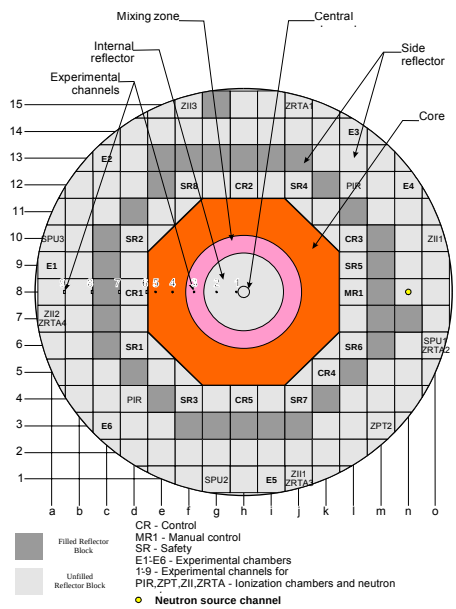

Figure 16.2-6: ASTRA Critical Facility

16.2.1.1.5 EXPERIMENTAL PLATE-OUT TEST FACILITY

16.2.1.1.5.1 Purpose

The purpose of tests done in the Experimental Plate-out Test Facility (POTF) is to obtain representative PBMR material plate-out parameters and, if possible (to be determined by a second feasibility study), to obtain graphite dust and fission product interaction data.

16.2.1.1.5.2 Description

a. Experimental Plate-out Loop

The Experimental Plate-out Loop (EPOL) is based on the design of the German Laminar Loop. Figure 16.2-7 shows the main components of the facility. A radioactive source will deliver fission products into a warm gas stream of helium at 9 bars. The stream will then pass

through a tube of a material under investigation. The tube will be heated in axial section to determine the effect of temperature on fission product deposition. The gas stream will leave the tube to be cooled and filtered where after it starts with the route again.

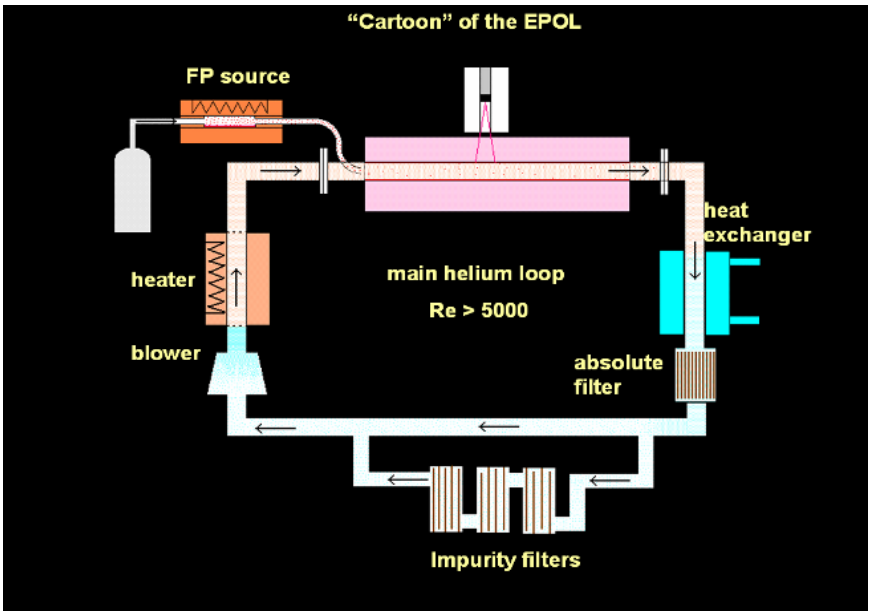

Figure 16.2-7: Main Components of the Experimental Plate-out Loop

b. Isopiestic Plate-out Facility

The Isopiestic Plate-out Facility (IPOF) is a laboratory type set-up for the investigation of plate-out parameters in a static environment.

Figure 16.2-8 shows the main components of the facility. A radioactive source will be placed within a container filled with helium. A vacuum is created and the subsequent deposition of fission products on a required material specimen is monitored.

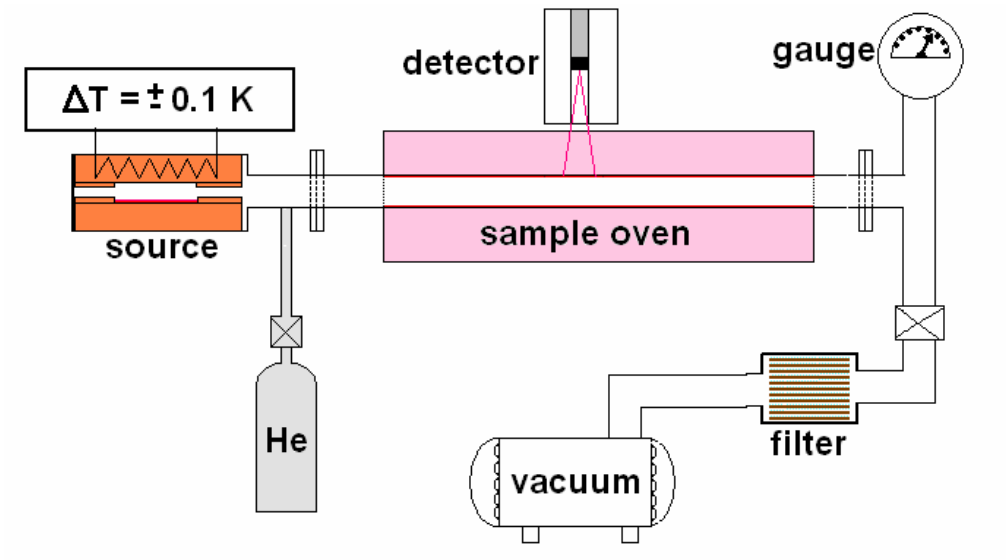

Figure 16.2-8: Main Components of the Isopiestic Plate-out Facility

16.2.1.1.6 NACOK

NACOK stands for Natural Convection with Corrosion. The main section of this facility is made up of a vertical channel of 300 mm x 300 mm and 7.5 m tall. The experimental channel is composed of sections representing a bottom reflector, sphere packing (pebble bed) and a top reflector. The experimental set-up was designed to be able to represent different breaks in pipes connecting to the reactor. Breaks can be created that simulate the coaxial duct (reactor outlet pipe), the defueling chute at the bottom of the reactor and the fuelling line at the top of the reflector. By a sectional design, different core heights can also be simulated. All sections of the experimental channel and of the return pipe can be heated to accident-relevant temperatures. At different positions, the local gas compositions can be measured.

The layout of the experiment is shown in Figure 16.2-9 and Figure 16.2-10.

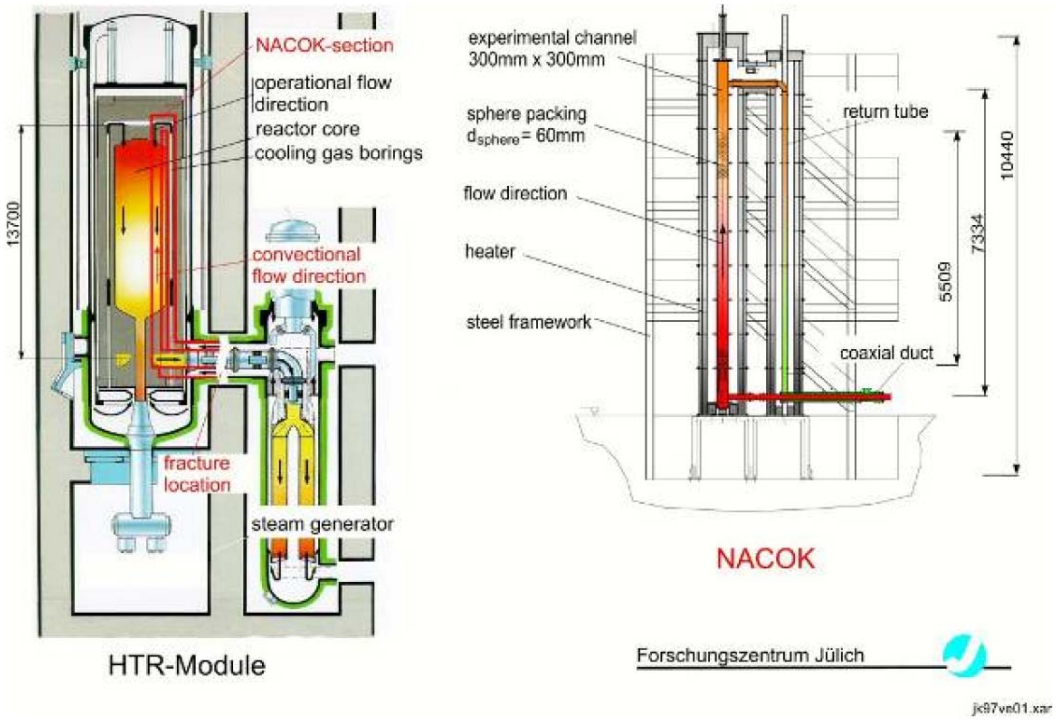

Figure 16.2-9: Layout of NACOK Experiment

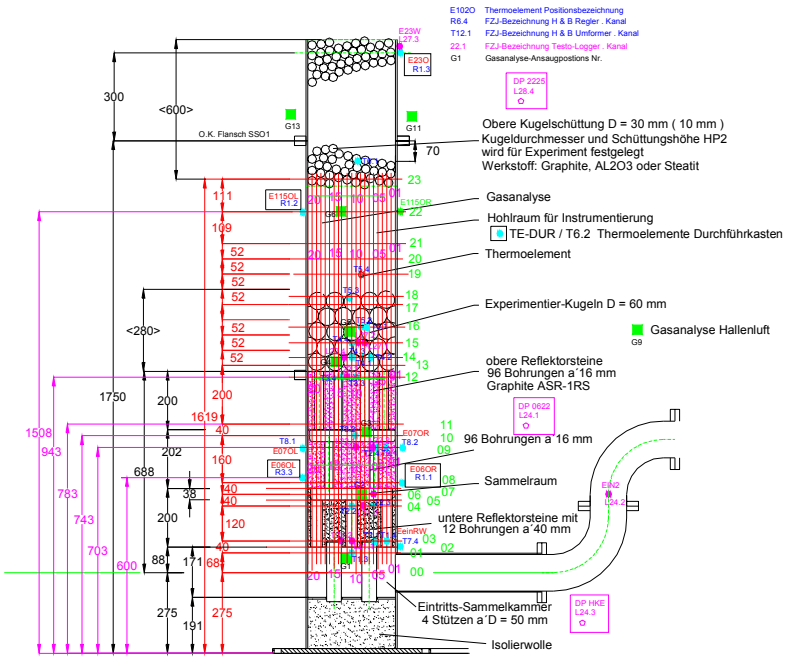

Figure 16.2-10: Layout of the NACOK Experiment

16.2.1.1.7 SANA

The SANA test facility consists of a heated pebble bed inside a furnace to simulate the thermal conditions of an HTGR-core. Different heater configurations are possible but Figure 16.2-11 shows a schematic of the test facility with a single central heating element. The diameter of the pebble bed is 1.5 m and the height is 1.0 m. The overall height of the facility is 3.2 m and the maximum heating capacity of the single central heating element is 35 kW. The top and bottom of the facility are well-insulated while the outside of the furnace is open to atmosphere. More than 50 steady-state as well as some transient tests were carried out in the facility. In these experiments all the main parameters of a pebble bed were varied, such as pebble material, pebble diameter, gas type, heating power and heating geometry.

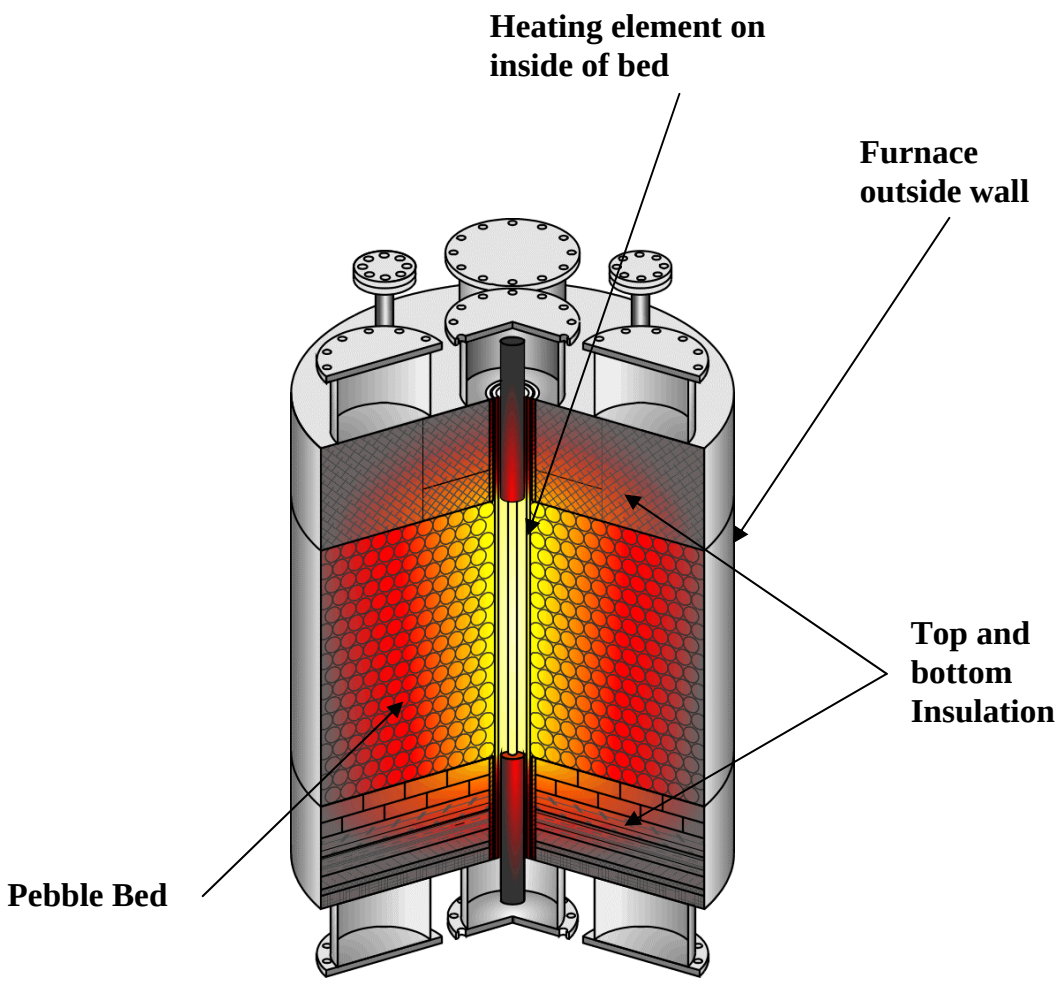

Figure 16.2-11: Layout of the SANA Experiment

16.2.1.2 Neutronics Design Tools

The R&D activities performed for the PBMR DPP in support of the neutronics design tools are listed in Table 16.2-1.

Table 16.2-1: R&D Supporting Neutronics Design Tools

R&D Item	Progress	Item Description
Detailed core neutronic design and shutdown system analysis	Completed	Establish the core layout, control system, neutronic behavior in steady state and transients as well as safety and fuel performance analysis; Needed for licensing and design
Initial criticality, startup and run-in phase concept	In Progress	Establish the know-how of loading to criticality, increasing power and temperature and the run-in phase till equilibrium core; Needed for licensing and design
Reverse engineering and V&V of legacy codes (GETTER, NOBLEG, VSOP99, RADAX, TINTE)	In Progress	Understanding knowledge base of current methods and codes, correlations (this is required for licensing); This also serves as a basis for new methods and codes development and V&V
Engineering and Training Simulator	In Progress	Fulfill licensing and operational requirement to train plant staff; establish know-how of engineering simulator models in support of operations
Integrated core neutronic/radiation/fuel performance code development	Future	Future knowledge and expert base as the product of core competency established; important for plant optimization, licensing in other markets, client support, reducing of calculational margins
Establishment of analysis capability for reactivity transients	In progress	Establish the know-how of performing control rod withdrawal, xenon oscillations, SSE, thermal transients, etc.
Verified high temperature cross section libraries and measurements	Future	Important to establish state of the art high temperature cross section data; needed for new methods and codes; reduction of margins and uncertainty

16.2.1.3 Materials

Materials-related R&D activities supporting the DPP are listed in Table 16.2-2.

Table 16.2-2: Materials R&D

R&D Item	Progress	Item Description
Materials R&D	In progress	These tests primarily provide material property data for design input and verification of the effects of the anticipated operating environment. Testing include: Self-welding in a Helium atmosphere on a range of material combinations (coatings included), various temperatures and dynamic loading conditions. Emissivity testing of various surface treatments and coatings on low alloy ferritic materials (SA 533 Grade 3) and austenitic stainless steels (Type 316). High Temperature oxidation, creep and fatigue testing in a Helium atmosphere on Ni-base alloys (Inconel 738) and Stainless steels (Type 410). Irradiation and Post Irradiation Testing on pressure vessel material (SA 533 Grade 3) at a range of temperatures and fluencies.

16.2.1.4

16.2.1.5 Fuel Qualification

PBMR (Pty) Ltd has embarked on an intensive fuel qualification programmed to ensure that the quality of their manufactured fuel is similar to the German LEU-TRISO fuel. This program is currently underway and will qualify the fuel in terms of physical properties, maximum fuel temperatures, percentage burn-up and fission product release for both normal operating and accident conditions. Statistical requirements of tests and qualification samples will also be investigated to ensure confident and safe application thereof for design and further operational specification refinements. Part of the qualification program will consist of irradiating a number of fuel spheres, containing a statistically significant number of coated particles, to full PBMR irradiation requirements in a material testing reactor.

16.2.1.6 Core Structural Ceramics Qualification

For the PBMR DPP, Core Structural Ceramics include the Reflector Graphite that establishes the core geometry, Carbon Fiber Reinforced Carbon (CFRC) components associated with the core lateral restraints and tie rods supporting the upper reflector, and ceramic components used to provide thermal insulation below the core. A summary of the Core Structural Ceramics R&D supporting the PBMR DPP is provided in Table 16.2-3.

Table 16.2-3: Core Structural Ceramics R&D

R&D Item	Progress	Item Description
Reflector Graphite Specification	Complete	Establish the specification for procurement of NBG-18 graphite
Reflector Graphite Manufacturing Process	Complete	Establish and qualify manufacturing processes to provide NBG-18 graphite with consistent
Reflector Graphite Quality Assurance Processes	Complete	Establish and qualify the Quality Assurance methods and procedures associated with the procurement of NBG-18 graphite.
Reflector Graphite Unirradiated Properties	Complete	Characterize the unirradiated properties of NBG-18 graphite
PBMR-Specific Materials Test Reactor Program (PSMP)	In Preparation	Conduct supplemental irradiations of NBG-18 to verify consistency with the established database for similar graphite's.
Characterization of CFRC Components	Future	Component-specific tests to establish the properties of and to qualify CFRC components.
Characterization of Insulation	Future	Characterization of insulating materials, including irradiation to modest fluence levels, where appropriate.

The most demanding Core Structural Ceramics R&D activities supporting the PBMR DPP center upon the Reflector Graphite. The Reflector Graphite components, and specifically the replaceable reflector components immediately adjacent to the core, are the only Core Structural Ceramic components for which fluence-related life limits must be established. The PBMR-Specific Materials Test Reactor Program (PSMP) is structured to provide data supporting startup and initial operation of the PBMR to the first planned outage period (6 years) as input to the licensing process. Completion of the PSMP is planned for the timeframe of plant startup in 2012. The results of the PSMP will be confirmed through surveillance, testing, inspection and maintenance activities over the plant operating lifetime.

Other PBMR DPP Core Structural Components will see modest or negligible radiation levels, and R&D principally relates to confirmation of properties used in design.

16.2.1.7 Plant Control Design

Plant Control R&D activities supporting the DPP are listed in Table 16.2-4.

Table 16.2-4: Plant Control R&D

R&D Item	Progress	Item Description
Control of Reactor	In progress	Understanding of the correct methods to control the flux and Reactor Outlet Temperature, as well as estimating the reactivity and the shutdown margin
Control of Brayton Cycle	In progress	Understanding of the correct methods to control the Brayton cycle using the different control valves.

16.2.1.8 FOAKE Design

The R&D activities related to first-of-a-kind engineering of components for the DPP are listed in Table 16.2-5.

Table 16.2-5: First-of-a-Kind Components R&D

R&D Item	Progress	Item Description
Dry Gas Seals	In progress	Performance and leak quantification
Brayton Turbo generator-set	In progress	Testing of seals, leak flow verification and material development
Blowers	In progress	Performance and bearing testing
Static Frequency Converter	Planned	Performance testing
Hot Gas Duct	In progress	Vibration and stratification testing
Core Connection	Planned	Performance testing
Heat Exchanger	In progress	Manufacturability and performance verification
Recuperator	In progress	Manufacturability and performance verification
Core Conditioning System Design	Planned	Manufacturability and performance verification
Valves	In progress	Manufacturability and performance verification in Helium
Main Shut-off Disk	In progress	Manufacturability and performance verification
Reactivity Control System	In progress	Manufacturability and performance verification
Reserve Shutdown System	In progress	Manufacturability and performance verification
Barrel Bearing	In progress	Surface coating development
Graphite	In progress	Material development

R&D Item	Progress	Item Description
Fuel Handling & Storage	In progress	Manufacturability and performance verification
Weld tests	Planned	Construction verification
Helium Inventory Control System Capacitance	In progress	Performance verification
Pipe Break Analysis Design	In progress	Applicability of LLB in Helium environment
Reactor Cavity Cooling System	In progress	Manufacturability and performance verification

16.2.1.9 Balance of Plant

The R&D activities performed on Balance of Plant items for the DPP are listed in Table 16.2-6.

Table 16.2-6: Balance of Plant R&D

R&D Item	Progress	Item Description
Seismic soil structure interaction modeling	In progress	Seismic soil structure interaction modeling
Burn-up measurement system design and validation	In progress	Develop concept and prototype for burn-up measurement and validate concept; testing underway
Helium Flow Measurement in Power Conversion Unit	In progress	Develop and validate Helium flow sensors; request for design concepts being issued to potential suppliers
Passive Mode Analysis	In progress	Verification of the RCCS system's passive mode operation via analysis. The RCCS will not be qualified by testing and for this reason require two independent analysis to be done. The analysis codes selected are RELAP and SPECTRA. The configuration of the RCCS is such that is not equivalent to the normal LWR scenarios and require some research in order to model the system correctly.
Filter Medium Characterization	Commence 2007	Determine PRS filter medium characteristics (efficiency) required to model dose rate and vent route
Rupture Panel Characterization	Commence 2007	Customize rupture panel design for PBMR requirement to achieve optimal free area to footprint ratio

16.2.1.10 Engineering Design Tools

The R&D activities on Engineering Design Tools for the DPP are listed in Table 16.2-7.

Table 16.2-7: Engineering Design Tools R&D

R&D Item	Progress	Item Description
Systems CFD software for Thermo-Fluids design of VHTR system	Completed	Development of M-Tech Industrial's Flownet network Thermo-Hydraulics code into the commercial Flownex software product. Includes component and reactor models to facilitate simulation of thermo-hydraulic steady state and transient behavior of indirect and direct power conversion cycles. R&D included V&V of the code to nuclear industry standards.
CFD Models for Thermo-Fluids behavior of Pebble Bed CFD	In progress	Implementation of models for flow and heat transfer in pebble beds for use in detailed CFD reactor models used for reactor design. Includes coding and V&V of these models as User Defined Functions (UDFs) in commercial CFD codes.
Corrosion/Oxidation Models for CFD (Air Ingress analysis)	Planned	Implementation of chemical reactions in commercial CFD codes for analysis of air ingress consequences during postulated accident conditions. Will include validation against NACOK experimental results.
Irradiated Graphite material behavior models	In progress	Implementation of non-linear material behavior models for use with commercial FEA codes in predicting distortion and material properties of graphite blocks under irradiation. Includes implementation of graphite failure models.
Block structure behavior models	In progress	Application of Discrete Element Modeling, based on contact between elastic bodies, to simulate interaction within block reflector structures and interaction between these structures and fuel spheres.

16.2.1.11 Safety Analysis

Safety Analysis R&D activities for the DPP are listed in Table 16.2-8.

Table 16.2-8: Safety Analysis R&D

R&D Item	Progress	Item Description
Identification of licensing basis events; and required analysis; and V&V	In progress	Identification of initiating events from FMECA/HAZOP processes; identification of postulated initiating events and establishment of accident scenarios and required analysis and assumptions
Establishment of conservative analysis methodology for licensing	Completed	Establishment of adequate conservative assumptions, analysis methodologies and processes to address all uncertainties to provide a justifiable safety case
Establishment of best estimate (plus uncertainty) analysis methodology for licensing	In progress	Establishment of a best estimate methodology including integrated accident analysis codes, assumptions, V&V, acquisition of plant data and licensing processes.
Establishment of confinement modeling capability	In progress	Contracting analysis work, confinement modeling assumptions, methodology; selection, purchasing and application of codes

R&D Item	Progress	Item Description
Source term analysis	In progress	Establishment of core release rates; activation of dust, contaminants and erosion products; selection and distribution of radionuclide's in reactor and power conversion unit; activity release mechanisms and radio nuclide transport; establishment of activity and release mechanisms of solid and liquid waste systems;
V&V of commercial codes	Mostly completed	V&V of commercial codes as per regulatory requirements to nuclear industry standards; these V&V include comparison with benchmark calculations and/or test results

16.2.2 Design Data Needs

Design Data Needs (DDNs) related to the Nuclear Heat Supply System (NHSS) is found in Section 4.3 as can be seen from Table 16.2-9, DDNs have been identified in support of the Fuel and Core Structure Ceramics.

Three DDNs have been identified pertaining to the NGNP Fuel. The first of these DDNs (NHSS-01-01) identifies the need for data to extend the irradiated fuels qualification database from the temperature-burnup envelope of the PBMR Demonstration Power Plant (DPP) to that of the PBMR NGNP. The second DDN (NHSS-01-02) specifies data to correspondingly extend the heat up data pertaining to accident conditions. The third DDN (NHSS-01-03) provides for an extension of the temperature-fluence envelope of the Fuel Graphite to that required by the NGNP. In all three cases, the extension of PBMR DPP data is required due to the broader operating envelope of the PBMR NGNP, which has an increased power level, a lower reactor inlet temperature and higher reactor outlet temperature.

The corresponding R&D for the fuel itself comprises irradiation of fuel samples at the higher temperature applicable to the NGNP, post irradiation examination and subsequent heat up of some samples to simulate accident conditions, plus corresponding modeling and analysis. For the Fuel Graphite, the R&D comprises the irradiation of graphite spheres at a temperature and to a fluence level applicable to the NGNP, plus post-irradiation examination and analysis.

Two DDNs (NHSS-02-01 and NHSS-02-02) have been identified to extend the irradiated materials qualification database for Reflector Graphite from the temperature-fluence envelope of the PBMR DPP to that of the PBMR NGNP. The extension of PBMR DPP data is required due to the broader operating envelope of the PBMR NGNP, which has an increased power level, a lower reactor inlet temperature and higher reactor outlet temperature. The corresponding R&D comprises irradiation of graphite samples at low and high temperatures, plus post-irradiation examination and analysis.

Table 16.2-9: Nuclear Heat Supply System DDNs

DDN	Title	Section Ref.
NHSS-01	**FUEL**	**5.3.1**
NHSS-01-01	Fuel irradiation test for normal operational conditions	
NHSS-01-02	Fuel heating tests for accident conditions	
NHSS-01-03	Fuel Graphite irradiation tests	
NHSS -02	**CORE STRUCTURE CERAMICS**	**4.3.1**
NHSS-02-01	Extended Properties of Irradiated Graphite at Low Temperatures	
NHSS-02-02	Extended Properties of Irradiated Graphite at High Temperatures	

16.2.3 Fuel Qualification R&D Plan

This section summarizes research and development (R&D) plans for the NGNP Fuel in response to DDNs that are identified in Section 5 and detailed in Section 5.3. For the NGNP Fuel, these DDNs address the fuel itself, as well as the Fuel Graphite.

The starting point for R&D supporting the PBMR NGNP Fuel is the corresponding R&D work presently underway for the PBMR DPP On this basis, the R&D defined herein is incremental to that for the PBMR DPP. Further, the R&D defined herein is limited to "Enabling Technology", that is, it is the minimum incremental R&D required to support the PBMR NGNP preconceptual design, as defined within this Preconceptual Design Report. Additional R&D, designated as "Enhancing Technology" may prove to be advantageous in terms of enhancing performance, improving economics or further reducing risk.

In the near-term, "pre-production" coated particles and spheres made with prototypical production equipment need to be characterized, including unirradiated fuel data and initial irradiated fuel data to confirm production specs. This fuel will be available in 2008 and presents a mutual opportunity for INL and Pebble Bed Modular Reactor (Pty) Ltd. to collaborate on such efforts that will help develop needed experience at INL/ATR and perhaps other facilities. Priority activities in FY08 include the overall planning and specifications preparation plus the conduct of the unirradiated fuel characterization. Production fuel will become available in mid-2012 and characterization of fuel in support of licensing and plant startup will be based on that fuel.

16.2.3.1 Scope

Two supplemental irradiation tests are planned for the PBMR NGNP to extend the database supporting the fuel for the PBMR DPP. The first of these irradiation tests, which is

proposed to start in FY2009 will use pre-production fuel. The second, proposed to start in 2012 will use actual production fuel.

A further possibility exists namely piggy-back irradiation of compacts loaded with PBMR pre-production coated particles in AGR-2 and coated particles simulating damaged coated particles in AGR-3. The latter would contain coated particles with only a buffer layer in order to study fission product release from failed coated particles. Post-irradiation tests on irradiated compacts in the TRIGA reactor in the hot cells at INL offer a unique opportunity to study iodine and tellurium release, which is not possible during a normal irradiation test using fuel spheres requiring a long decay time after irradiation during which short-lived iodine and tellurium isotopes decay to such an extent that they can no longer be measured.

Fuel irradiation tests for normal operational conditions

Similar to the PBMR DPP Proof Test, it is proposed that at least 12 fuel spheres are irradiated to irradiation targets the shown in Table 16.2-10. The Fuel qualification DDNs (NHSS-01-01) refer to a maximum fuel temperature of 1270°C, but that was rounded to 1300°C for the irradiation tests. It is also recommended to extend the irradiation test up to 11.3% FIMA, which corresponds to about 109,000 MWD/tU. This would ensure a sample size that would allow a statistically meaningful measurement of the expected coated particle failure fraction.

Table 16.2-10: Normal Operation Irradiation Requirements for NGNP Fuel

Irradiation Parameter	Unit	Value
Maximum Fuel Temperature	°C	1 300
Burn-up	MWD/tU	109,000
Fast Neutron Dose	cm^2	2.7×10^{21}

Post-irradiation Examination (PIE) will need to be performed on all irradiated fuel spheres, including:

- Appearance
- Mass
- Diameter
- Burn-up
- Fission product inventory

In addition, one irradiated fuel sphere will be deconsolidated and the following PIE performed:

- Fission product distribution in fuel sphere
- Optical ceramography of coated particles

- IMGA on coated particles
- Fission product distribution in coated particles

Fuel heating tests for accident conditions

The remaining 11 fuel spheres, after the irradiation testing, will be subjected to heating tests simulating DLOFC transient temperatures, nominally 1800°C (rounded to nearest hundred degrees from DDN NHSS-01-02). Following heating tests, all heated fuel spheres will be visually examined again and their fission product inventories measured. One heated fuel sphere will be deconsolidated to provide coated particles for ceramography and fission product distribution measurements.

Fuel Graphite irradiation tests

In response to DDN NHSS-01-03, pressed graphite samples will be irradiated up to a fast neutron dose of 4.0 x 10^{21} cm-2. The temperature range will be finalized as the NGNP design progresses.

Samples for investigation and irradiation will be cut from pressed graphite spheres provided for the test. These samples will be cut parallel and perpendicular to the extrusion direction. Following irradiation, the following characteristics will be measured:

- Geometrical size
- Mass
- Calculation of sample density
- Measurement of sample density
- Sample porosity
- Thermal conductivity in the range 20 up to Irradiation Temperature
- Electric conductivity in the range 20 up to Irradiation Temperature
- Thermal coefficient of linear expansion in the range 20 up to Irradiation Temperature
- Dynamic Young's modulus
- Compression strength
- Ultimate bending strength
- Optical ceramography
- Uranium and thorium content

The above measured characteristics will be compared to values obtained during pre-irradiation characterization.

16.2.3.2 Schedule

As shown in the schedule, Figure 16.2-12, planning for the initial irradiation of pre-production fuel and the preparation of samples and capsules is to be completed in FY2008. The initial irradiation will take place starting in FY2009, with post-irradiation examination (PIE) completed by end-FY2011. This schedule will support the Safety Review in conjunction with the COL that starts in FY2012. All but one of the irradiated samples will be utilized in fuel heating tests and examination in the latter part of FY2011.

Preparation for the more extended irradiation will be initiated in FY2011, with the irradiation being started in mid-FY2012. The irradiation, PIE, and heating tests will be completed by the middle of FY2015. As before, all but one of the samples will be utilized in heat-up tests. This schedule will support the initial startup of the PBMR NGNP in FY2018.

The Fuel Graphite irradiation tests will be initiated with preparation and planning in FY2009. Actual irradiations will begin in FY2010 and completed, along with post-irradiation examinations by the end of FY2013.

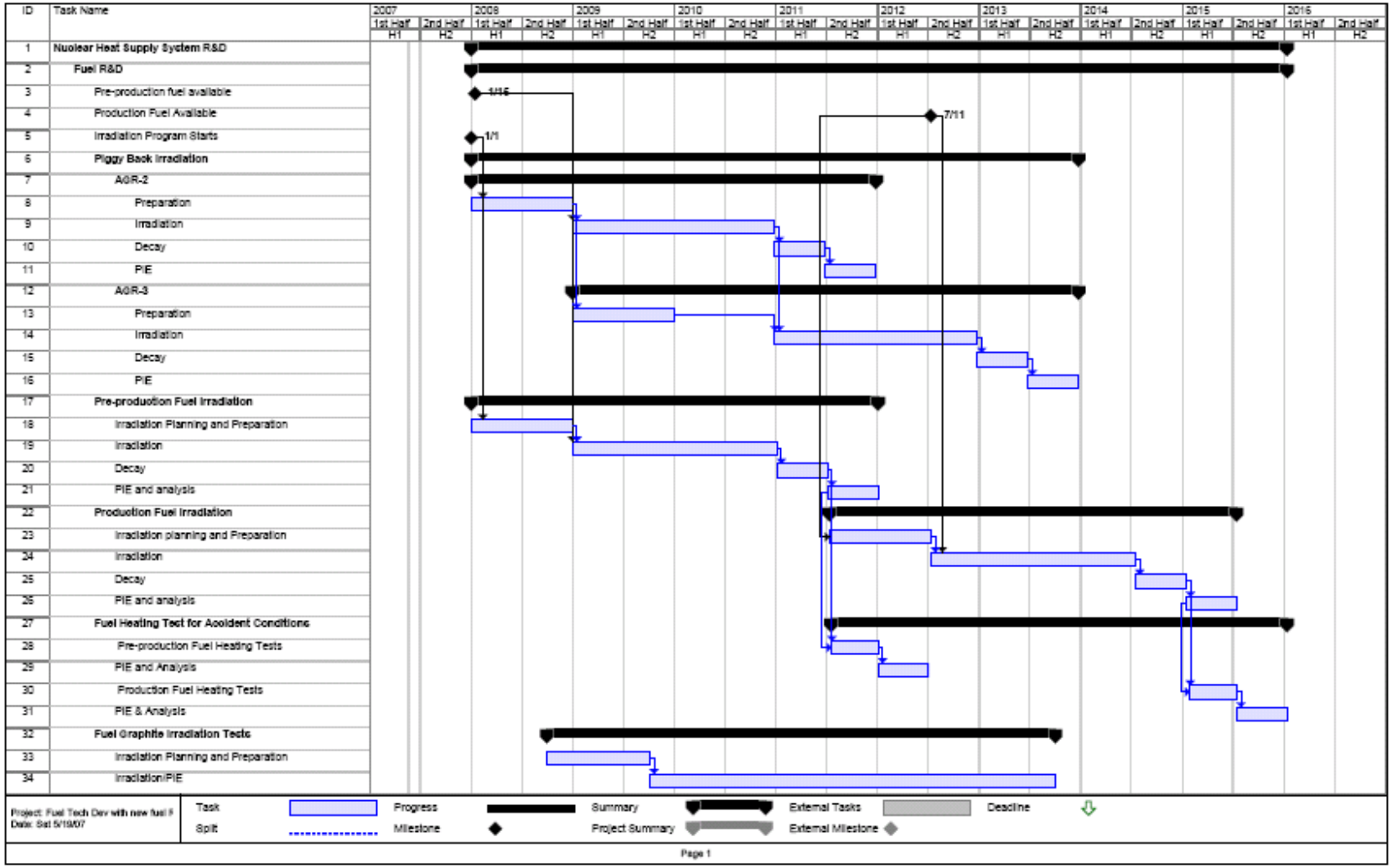

Figure 16.2-12: R&D Schedule – Fuel

Table 16.2-11: Fuel R&D Cost

Item	FY08	FY09	FY10	FY11	FY12	FY13	FY14	FY15	FY16	FY17	Total
Labor (MY)											
Materials Development	1.3	8.0	9.6	9.6	9.6	8.0	4.8	4.8	4.8	8.0	68.5
Methods V&V											
Total	1.3	8.0	9.6	9.6	9.6	8.0	4.8	4.8	4.8	8.0	68.5
Labor Cost (K$ @ $150/hr and 2080hr/MY)											
Materials Development	400	2500	3000	3000	3000	2500	1500	1500	1500	2500	21400
Methods V&V											
Subtotal	400	2500	3000	3000	3000	2500	1500	1500	1500	2500	21400
Materials & Other (K$)											
Materials Development	100	2000	3500	3500	3500	3000	2000	2000	2000	2000	23600
Methods V&V											
Subtotal	100	2000	3500	3500	3500	3000	2000	2000	2000	2000	23600
Total Cost (K$)											
Materials Development	500	4500	6500	6500	6500	5500	3500	3500	3500	4500	45000
Methods V&V											
Total	500	4500	6500	6500	6500	5500	3500	3500	3500	4500	45000

16.2.3.3 Manpower and Cost

The estimated costs of the R&D activities supporting the Fuel and Fuel Graphite qualification program are shown in Table 16.2-11: Estimates are provided in terms of the labor man-years over time and the total labor and non-labor costs in 2007 dollars. An average labor rate of [$150/hour] has been applied, which is judged to be representative of a U.S. National Laboratory when considering a composite of technicians, engineers/scientists and managers. An average of 2080 man-hours/man-year (MY) has been assumed for the development of MY estimates. These estimates are presently based on judgment and are acknowledged to have significant uncertainties. The total cost of the incremental R&D for the PBMR NGNP is $45M ($21.4M for Labor/$23.6M for Materials & Other) over the period FY2008 through FY2017.

16.2.4 Core Structure Ceramics – Reflector Graphite R&D

This section describes the minimum incremental R&D to support the enabling technology needs of the PBMR NGNP. Consistent with the NHSS DDNs, the R&D plan is organized to provide data extending the qualified operating envelope of the Reflector Graphite at low and high temperatures, respectively.

It is noted that Graphite R&D is an area in which there is significant potential for collaboration between the PBMR DPP and the PBMR NGNP projects. The PBMR DPP project is presently underway with the qualification of NBG-18 graphite, a product of SGL Carbon. Significant progress has been made in establishing the manufacturing process base and associated QA programs. Several lots of graphite have already been procured and the initial characterization of unirradiated properties is nearing completion. PBMR is presently preparing to implement their PBMR-Specific Materials Test Reactor Program (PSMP) to qualify the NBG-18 graphite for the temperature-fluence envelope of the PBMR DPP.

In parallel, the NGNP Program at INL is embarking on a graphite development effort that addresses multiple product forms (including NBG-18) and applications (including the PBMR). The INL program places particular emphasis on the understanding of fundamental graphite characteristics that would, ideally, allow the characterization of new coke and/or graphite sources without the need for an extensive irradiation program. To the extent that the INL program addresses NBG-18 and that manufacturing and QA systems development are generic, there is a potential to accelerate the INL effort and reduce its cost by utilizing applicable results of the PBMR DPP development work that would otherwise be duplicated.

From the PBMR perspective, there is a potential to expand the database supporting NBG-18 and, potentially, to reduce the scope of surveillance, testing, inspection and maintenance (STIM) required as a basis for operation of the PBMR DPP. Further potential benefits are access to multiple qualified vendors for follow-on PBMR commercial deployments and easing the burden associated with qualification of new graphite sources.

In order to take mutual advantage of PBMR's ongoing program to qualify SGL graphite plus INL's and PBMR's mutual interests to cooperate on graphite qualification with SGL and Graftek, efforts are underway to develop a collaborative program. In the interim, a preliminary scope, cost and schedule for R&D activities addressing the Reflector Graphite DDNs for the PBMR NGNP have been developed. Details are provided in the following subsections.

16.2.4.1 Scope

Two supplemental irradiation series are planned for the PBMR NGNP to extend the database supporting the PBMR DPP. One, corresponding to DDN NHSS-02-01, is at low temperature, nominally proposed at 350ºC. The other, corresponding to DDN NHSS-02-02, is at high-temperature, nominally proposed at 950ºC.

For both of these series, the initial step is planning for the irradiation test program and preparation of the graphite samples and capsules. An initial irradiation is proposed at both temperatures to an intermediate fluence level that corresponds, as a minimum, to the maintenance outage interval of the PBMR NGNP, 5 years. The data provided by this irradiation will be sufficient to support initial operation of the PBMR NGNP and is planned in support of the construction and operating license application. A more extended irradiation is planned at both temperatures to confirm or establish the target design life for the replaceable reflector. The latter is planned for completion prior to initial startup activities.

16.2.4.2 Schedule

Shown on Figure 16.2-13 is the schedule for research and development of the reflector graphite. Planning for the initial irradiations at both temperature levels and the preparation of samples and capsules is to be completed in FY2008. The initial irradiations at both temperatures will take place starting in FY2009, with post-irradiation examination (PIE) completed by mid-FY2011. This schedule will support the Safety Review in conjunction with the COL that starts in FY2012.

Preparation for the more extended irradiation will be initiated in FY2010, with the irradiation being started in FY2011. The irradiation and PIE will be completed by the end of FY2014. This schedule will support the initial pre-commissioning operations that begin in FY2016 with about one year of margin to accommodate uncertainties.

16.2.4.3 Manpower and Cost:

The estimated costs of the R&D activities supporting the Reflector Graphite qualification program are shown in Table 16.2-12: Estimates are provided in terms of the labor man-years over time and the total labor and non-labor costs in 2007 dollars. An average labor rate of [$150/hour] has been applied, which is judged to be representative of a U.S. National Laboratory when considering a composite of technicians, engineers/scientists and managers. An average of 2080 man-hours/man-year (MY) has been assumed for the development of MY estimates. These estimates are presently based on judgment and are acknowledged to have significant uncertainties. The total cost of the extension to the PBMR DPP PSMP is $5M ($2.05M for Labor/$2.95M for Materials & Other) over the period 2008 through 2014.

ID	Task Name	DDN	Duration	Start	Finish
1	**Extended Properties of Irradiated Graphite at Low Temperatures**	**NHSS-02-01**	**1827 days**	**Mon 07/10/01**	**Tue 14/09/30**
2	Irradiation Planning and Preparation		260 days	Mon 07/10/01	Fri 08/09/26
3	Irradiation/PIE Supporting COL		655 days	Mon 08/09/29	Fri 11/04/01
4	Irradiation Planning and Preparation		265 days	Mon 09/09/28	Fri 10/10/01
5	Irradiation/PIE Supporting Plant Startup		1042 days	Mon 10/10/04	Tue 14/09/30
6	**Extended Properties of Irradiated Graphite at High Temperatures**	**NHSS-02-02**	**1827 days**	**Mon 07/10/01**	**Tue 14/09/30**
7	Irradiation Planning and Preparation		260 days	Mon 07/10/01	Fri 08/09/26
8	Irradiation/PIE Supporting COL		655 days	Mon 08/09/29	Fri 11/04/01
9	Irradiation Planning and Preparation		265 days	Mon 09/09/28	Fri 10/10/01
10	Irradiation/PIE Supporting Plant Startup		1042 days	Mon 10/10/04	Tue 14/09/30

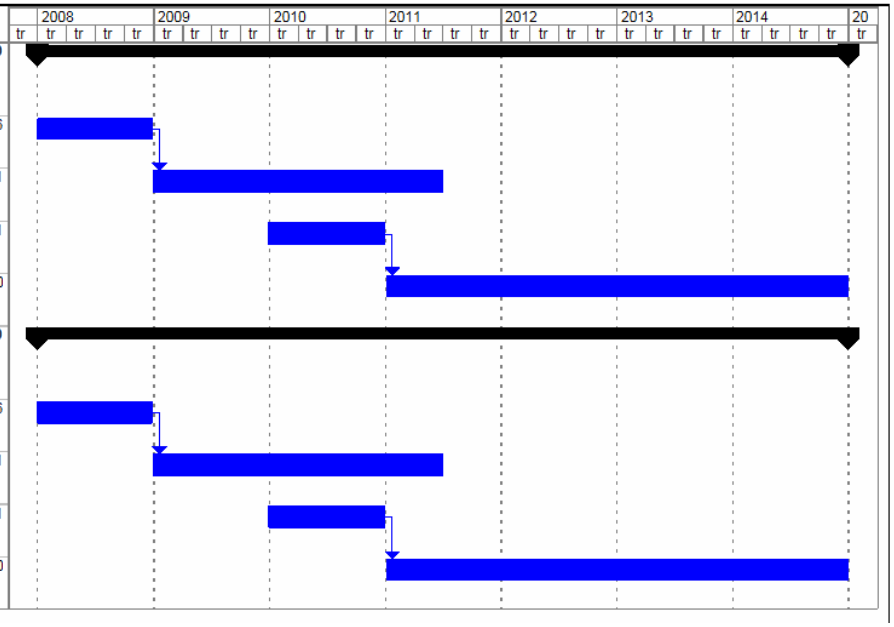

Figure 16.2-13: R&D Schedule – Reflector Graphite

Table 16.2-12: Reflector Graphite R&D Cost

Item	FY08	FY09	FY10	FY11	FY12	FY13	FY14	Total
Labor (MY)								
Materials Development	1.1	0.8	1.0	0.6	0.6	1.3	1.1	6.5
Methods V&V								
Total	1.1	0.8	1.0	0.6	0.6	1.3	1.1	6.5
Labor Cost (K$ @ $150/hr and 2080hr/MY)								
Materials Development	350	250	300	200	200	400	350	2050
Methods V&V								
Subtotal	350	250	300	200	200	400	350	2050
Materials & Other (K$)								
Materials Development	150	350	500	600	500	500	350	2950
Methods V&V								
Subtotal	150	350	500	600	500	500	350	2950
Total Cost (K$)								
Materials Development	500	600	800	800	700	900	700	5000
Methods V&V								
Total	500	600	800	800	700	900	700	5000

16.2.4.4 NHSS R&D Cost and Schedule Summary

The overall technology development schedule for the NHSS is shown in Figure 16.2-14. As can be seen from the schedule, activities are organized to support the completion of Final Design in FY2012 and Plant Start in FY2018.

Fuel Irradiation

DDNs have identified the need for additional fuel irradiation capsules that will provide confirmation of meeting the extended performance envelope of the NGNP and assure an adequate statistical database for the design and licensing efforts. It will require additional data covering the increased fluence and burnup, plus the operating and limiting accident temperatures of the reference UO2 fuel. Burnups as high as 109 MWD/MT are to be tested at peak operating temperatures of 1300°C with peak temperatures with transients at 1800°C. Budget estimates are subject to irradiation facility plans and overall cooperative arrangements. The PBMR baseline estimate assumes continued use of the Russian IVV-2M test reactor.

In the near-term, process qualification fuel particles and spheres made with prototypical production equipment need to be characterized, including unirradiated fuel data and initial irradiated fuel data to confirm production specs. This fuel will be available in 2008 and presents a mutual opportunity for INL and PBMR (Pty) Ltd. to collaborate on such efforts that will help develop needed experience at INL/ATR and perhaps other facilities. Assuming a collaborative INL/PBMR fuel qualification program, a preliminary allowance for the budget is $45 M. Pilot plant production fuel for such capsules is projected in the 2012 timeframe and the baseline schedule requires about 6 years.

Graphite

DDNs for the incremental graphite qualification program for the NGNP address gaps in data covering the fluence-temperature operating range at both low and high temperatures. The PBMR baseline estimate for this incremental effort is about $2 M.

In order to take mutual advantage of PBMR's ongoing program to qualify SGL graphite plus INL's and PBMR's mutual interests to cooperate on graphite qualification with SGL and Graftek, efforts are underway to develop a collaborative INL/PBMR program. Priority activities in FY08 include continued planning and the initiation of capsule tests at INL/ATR. Assuming, a collaborative INL/PBMR graphite qualification program, a preliminary allowance for the budget is $5 M.

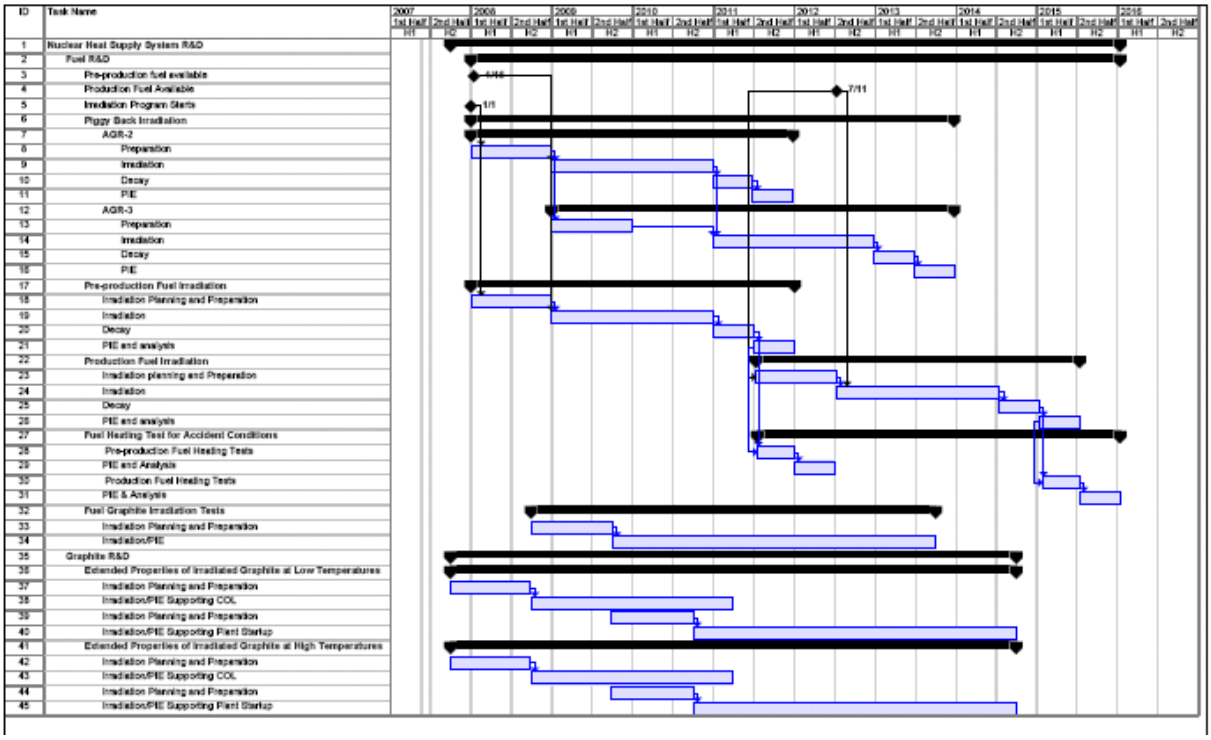

	FY2008	FY2009	FY2010	FY2011	FY2012	FY2013	FY2014	FY2015	FY2016	FY2017	TOTAL
Nuclear Heat Supply System											
Fuel	$0.5	$4.5	$6.5	$6.5	$6.5	$5.5	$3.5	$3.5	$3.5	$4.5	$45.0
Reflector Graphite	$0.5	$0.6	$0.8	$0.8	$0.7	$0.9	$0.7				$5.0
Subtotal	$1.0	$5.1	$7.3	$7.3	$7.2	$6.4	$4.2	$3.5	$3.5	$4.5	$50.0

Figure 16.2-14: Summary NHSS Development Schedule and Cost

16.3 HEAT TRANSPORT FACILITY

This section summarizes research and development (R&D) plans for Heat Transport Systems (HTS) in response to DDNs that are identified in Section 16.3.1 and detailed in Section 6.3. The most challenging requirements relate to the Intermediate Heat Exchanger (IHX), which transfers thermal energy from the Primary Heat Transport System (PHTS) to the Secondary Heat Transport System (SHTS). Given the technology challenges associated with this heat exchanger, a two-technology approach has been identified. The first is based upon metallic heat exchanger technology, and is summarized in Section 16.3.2. Ceramic heat exchangers have been identified as a promising alternative and are potentially enabling for high-temperature applications, such as the NGNP. The associated R&D program is described in Section 16.3.3. Two additional R&D topics have been identified for the HTS. These relate to the SHTS Helium Mixing Chamber (Section 16.3.4) and high-temperature ducts and insulation (Section 16.3.5).

16.3.1 Design Data Needs

DDNs pertaining to the Heat Transport System (HTS) are listed in Table 16.3-1. As can be seen from Table 16.3-1, DDNs have been identified in support of three HTS subsystems or components. These are the Intermediate Heat Exchanger (IHX), the high-temperature Secondary Heat Transport System (SHTS) Helium Mixing Chamber, which rejoins the helium stream exiting the PCHX with the main helium flow from the IHX to the steam generator, plus high temperature internal ducts and insulation within both the PHTS and SHTS. In the case of the IHX, two design paths have been identified that are to be pursued in parallel. These are metallic IHXs and ceramic/composite IHXs. Due to fundamental differences in these technologies, they have been separately classified for the purposes of R&D planning.

For the metallic heat exchanger, DDNs provide for the characterization and qualification of materials (HTS-01-01 through HTS-01-12), the development of methods for design and analysis (HTS-01-13 through HTS-01-16), plus performance verification (HTS-01-17). Note that two reference materials have been identified for the IHX, Alloy 617 and Alloy 230. Pending down selection, it is recommended that qualification of both materials be undertaken in parallel.

Table 16.3-1: Heat Transport System DDNs

DDN	Title	Section Ref.
HTS-01	**Intermediate Heat Exchanger - Metallic**	**6.3.1**
HTS-01-01	Establish Reference Specifications for Alloy 617	
HTS-01-02	Thermal/Physical and Mechanical Properties of Alloy 617	
HTS-01-03	Welding and As-Welded Properties of Materials of Alloy 617for Compact Heat Exchangers	
HTS-01-04	Aging Effects of Alloy 617	
HTS-01-05	Environmental Effects of Impure Helium on Alloy 617	
HTS-01-06	Influence of Grain Size on Materials Properties on Alloy 617	
HTS-01-07	Establish Reference Specifications for Alloy 230	
HTS-01-08	Thermal/Physical and Mechanical Properties of Alloy 230	
HTS-01-09	Welding and As-Welded Properties of Materials of Alloy 230for Compact Heat Exchangers	
HTS-01-10	Aging Effects of Alloy 230	
HTS-01-11	Environmental Effects of Impure Helium on Alloy 230	
HTS-01-12	Influence of Grain Size on Materials Properties on Alloy 230	
HTS-01-13	Methods for Thermal/Fluid Modeling of Plate-Type Compact Heat Exchangers	
HTS-01-14	Methods for Stress/Strain Modeling of Plate-Type Compact Heat Exchangers	
HTS-01-15	Criteria for Structural Adequacy of Plate-Type Compact Heat Exchangers at Very High Temperatures	
HTS-01-16	Methods for Performance Modeling of Plate-Type Compact Heat Exchangers	
HTS-01-17	IHX Performance Verification	
HTS-01-18	Data Supporting Materials Code Case	
HTS-01-19	Data Supporting Design Code Case	
HTS-02	**Intermediate Heat Exchanger - Ceramic**	**6.3.2**
HTS-02-01	Review Existing Technology	
HTS-02-02	Materials Property Database	
HTS-02-03	Design Methods	
HTS-02-04	Performance Verification	
HTS-02-05	Manufacturing Technology	
HTS-02-06	Codes and Standards	
HTS-03	**SHTS Helium Mixing Chamber**	**6.3.3**
HTS-03-01	Mixing Chamber Performance Test	
HTS-04	**High Temperature Ducts and Insulation**	**6.3.4**
HTS-04-01	Evaluation of High Temperature Ducts and Insulation Systems	

The final DDNs supporting the metallic IHX, HTS-01-18 and HTS-01-19, are established to provide the underlying database supporting NGNP-specific code cases for the IHX material and design, respectively. There is a potential that such code cases would also be applicable to early commercial plants, pending formal implementation within the ASME Code.

For ceramic/composite IHXs, six placeholder DDNs (HTS-02-01 through HTS-02-06) have been identified, as both the DDN's and the associated R&D activities will need further development during conceptual design. The first DDN provides for a review of existing technology that is potentially applicable to the development of a ceramic IHX. The anticipated result of the corresponding R&D effort will be the selection of one or more materials and/or heat exchanger technologies for further development. The second DDN specifies the need for a materials property database for the selected materials. The third DDN addresses the need for design methods, while the fourth identifies requirements for performance verification. The fifth and sixth DDNs address manufacturing technology and the development of codes and standards.

For the SHTS Helium Mixing Chamber, one DDN (HTS-03-01) has been developed that specifies the need for verification of mixing chamber performance. The design of the mixing chamber is viewed as potentially challenging, based upon the significant temperature differences of the two helium streams to be joined.

One DDN (HTS-04-01) has been developed for the high temperature internal ducts and insulation systems. These components channel the highest temperature helium from the reactor to the process and serve to protect both the IHX vessels and the HTS pressure boundary piping. A special study has been identified for these components (Section 6.4) during conceptual design and there is a potential that this R&D area may be expanded as results are obtained.

16.3.2 Intermediate Heat Exchanger (Metallic) R&D Plan

The scope and schedule of R&D activities supporting the metallic IHX and fulfilling the requirements of DDNs HTS-01-01 through HTS-01-19 are depicted in Table 16.3-1. The schedule is organized within the two major subcategories of Materials Development and Qualification and Methods Development, Verification and Validation.

16.3.2.1 Scope

The scope of the R&D plan supporting the metallic IHX provides for materials qualification, design and analysis methods development, performance verification and the development of NGNP-specific code cases for materials and design. The latter is intended as an interim step, leading to formal inclusion of those elements in the ASME Code. This interim step in code development is judged to be necessary, based on the schedule defined for the NGNP. There is a potential that these code cases may be applied to initial commercial plants as well, depending upon the timing of those plants relative to code development.

Materials Development and Qualification

The R&D activities pertaining to DDNs HTS-01-01 through HTS-01-06 provide for the extended qualification of the current reference IHX material, Alloy 617. This extended qualification is required due to the demanding operating conditions that will be seen by the IHX, plus the small grain size that is expected to be required for compact heat exchangers as they are characterized by very thin heat transfer surface cross-sections. As described in DDN HTS-01-01 (Section 6.3.1), an initial effort is required to further develop the specification for Alloy 617 and to establish a reference for characterization. Included in this effort, is a review of the current database for this material, consultation with material vendors and consideration of a controlled specification variant, Alloy 617CCA, that potentially decreases the range of uncertainties with respect to properties. The conclusion of this effort will be procurement of materials to be used for subsequent testing.

The remaining materials R&D activities responding to the DDNs in this series provide for testing of Alloy 617 samples to determine thermal physical and mechanical characteristics, weldability characteristics, response to thermal aging, the effects of anticipated impurities in the operating environment and the influence of grain size on material properties.

An alternate metallic material, Alloy 230, has been identified for the IHX. The R&D activities in response to DDNs HTS-01-07 through HTS-01-12 are analogous to those described above for the reference material, Alloy 617. As a result of these parallel activities, one or the other of these alloys will be selected as the reference for further design and development.

Methods Development, Verification and Validation

Thermal structural modeling and stress strain structural modeling (DDNs HTS-01-13 and DDN HTS-01-14) are required to provide a predictive basis for operation and performance characteristics of a plate type IHX. The predictive output from these models will be compared and modified as appropriate based on the results of prototype IHX testing and verification and validation activities. These results will form the basis for development of the ASME Code Case for the alloy and IHX design selected. Some type of simplified modeling techniques or the development of specific modeling test specimens may be required due to the complexity of the model required. The analytical modeling effort will also support the design of a prototype IHX that is to be tested in conjunction with DDN HTS-01-017 (see below).

The criteria for acceptable stresses and strains and the development of acceptable safety factors are required for ASME Code Case development and to establish the operational boundaries of the IHX prototype testing activities (DDN HTS-01-015). These criteria will be developed from a review of appropriate ASME Code documentation, discussion with appropriate ASME Code committee personnel and interaction during the development of the stress strain model.

Performance modeling methods (DDN HTS-01-016) are required to adequately evaluate the results of DDNs HTS-01-13 and HTS-01-14, provide guidance to testing performed in DDN HTS-01-017 and to support the development of materials and design code cases (DDNs HTS-01-18 and HTS-01-19).

IHX performance verification (DDN HTS-01-017) is required to empirically validate the IHX design and resolve issues noted regarding the design and assist the validation and verification process of the modeling performed. IHX performance verification includes design and construction of a helium heat transfer test facility that is presently based on a 2MWt design developed for INL in 2006 (Ref. 16.3-1). It further includes prototype IHX test module fabrication, IHX life prediction, IHX durability testing, IHX performance testing, IHX materials testing and interface with the models developed.

The reference R&D plan includes the development of ASME Section III materials and design code cases. Note that the appropriate classification of the IHX heat transfer surface is at present an unresolved issue that will be further addressed through a special study during conceptual design (see Section 6.4.2). Unlike other parts of the PHTS pressure boundary, the IHX heat transfer surface interfaces with the SHTS, which itself is a closed loop. Note that the two candidate IHX materials (Alloys 617 and 230) are not presently listed in ASME Section II for ASME Section III service.

16.3.2.2 Schedule

As shown in the schedule, Table 16.3-1, the selection and qualification of materials establishes the critical path during the first three years, through 2010. Key drivers in the materials qualification effort are the procurement of materials for testing and the aging of specimens. The time required for procurement of materials has an element of uncertainty that will be dependent upon supplier motivation and prior commitments.

The facility required for verification testing of models representative of the IHX core is also a potential critical path item, as such a facility does not presently exist. Options are modification of an existing facility (such as the Helium Test Facility in South Africa) or the construction of a new facility in South Africa, at INL or other appropriate location. As noted above, the reference basis for this plan is the construction of a new 2MWt facility at INL. The schedule shown in Table 16.3-1 suggests that initial activities to define and implement the facility should be started in FY 2008, in parallel with materials qualification. The actual schedule and influence on the overall critical path will be confirmed during the first half of FY2008. The resulting facility is expected also to be applicable to the verification testing of ceramic IHXs (Section 16.3.3).

The performance verification tests, along with the materials qualification activities provide the basis for developing and seeking approval of code cases for materials and design. The metallic IHX R&D activities will be completed in early-FY2012, which supports the

scheduled procurement date in the same year and the NGNP target operation date at the end of 2018.

ID	Task Name	DDN	Duration	Start	Finish
1	**Materials Development and Qualification**		**785 days**	**Mon 10/1/07**	**Fri 10/1/10**
2	**Alloy 617 Specification and Testing**		**785 days**	**Mon 10/1/07**	**Fri 10/1/10**
3	**Define Ref. Alloy 617 Specification**	**HTS-01-01**	45 days	Mon 10/1/07	Fri 11/30/07
4	Procure 3 Heats of Alloy 617 for Testing		305 days	Mon 12/3/07	Fri 1/30/09
5	**Thermal Physical and Mechanical Testing for Alloy 617**	**HTS-01-02**	195 days	Mon 2/2/09	Fri 10/30/09
6	**Weldability Assessment for Alloy 617**	**HTS-01-03**	195 days	Mon 2/2/09	Fri 10/30/09
7	**Aging Assessment for Alloy 617**	**HTS-01-04**	350 days	Mon 6/1/09	Fri 10/1/10
8	**Alloy 617 Environmental Effects Assessment**	**HTS-01-05**	350 days	Mon 6/1/09	Fri 10/1/10
9	**Grain Size Assessment for Alloy 617**	**HTS-01-06**	130 days	Mon 6/1/09	Fri 11/27/09
10	**Alloy 230 Specification and Testing**		**785 days**	**Mon 10/1/07**	**Fri 10/1/10**
11	**Define Reference Alloy 230 Specification**	**HTS-01-07**	45 days	Mon 10/1/07	Fri 11/30/07
12	Procure 3 Heats of Alloy 230 for Testing		305 days	Mon 12/3/07	Fri 1/30/09
13	**Thermal Physical and Mechanical Testing for Alloy 230**	**HTS-01-08**	195 days	Mon 2/2/09	Fri 10/30/09
14	**Weldability Assessment for Alloy 230**	**HTS-01-09**	195 days	Mon 2/2/09	Fri 10/30/09
15	**Aging Assessment for Alloy 230**	**HTS-01-10**	350 days	Mon 6/1/09	Fri 10/1/10
16	**Alloy 230 Environmental Effects Assessment**	**HTS-01-11**	350 days	Mon 6/1/09	Fri 10/1/10
17	**Grain Size Assessment for Alloy 230**	**HTS-01-12**	120 days	Mon 6/1/09	Fri 11/13/09
18	**Methods Development, Verification and Validation**		**1110 days**	**Mon 10/1/07**	**Fri 12/30/11**
19	**IHX Design Methods and Criteria**		**483 days**	**Wed 4/1/09**	**Fri 2/4/11**
20	General Model Development		393 days	Wed 4/1/09	Fri 10/1/10
21	**Thermal Structural Modeling**	**HTS-01-13**	90 days	Mon 10/4/10	Fri 2/4/11
22	**Stress/Strain Modeling**	**HTS-01-14**	90 days	Mon 10/4/10	Fri 2/4/11
23	**Criteria for Acceptable Stress/Strain**	**HTS-01-15**	90 days	Mon 10/4/10	Fri 2/4/11
24	**Performance Modeling Methods**	**HTS-01-16**	90 days	Mon 10/4/10	Fri 2/4/11
25	**IHX Performance Verification**	**HTS-01-17**	**980 days**	**Mon 10/1/07**	**Fri 7/1/11**
26	Facility Definition		130 days	Mon 10/1/07	Fri 3/28/08
27	Facility Modification/Construction		655 days	Mon 3/31/08	Fri 10/1/10
28	Prototype IHX Fabrication		215 days	Mon 4/5/10	Fri 1/28/11
29	IHX Life Prediction		105 days	Mon 2/7/11	Fri 7/1/11
30	IHX Durability Testing		105 days	Mon 2/7/11	Fri 7/1/11
31	IHX Performance Testing		105 days	Mon 2/7/11	Fri 7/1/11
32	IHX Materials Testing		105 days	Mon 2/7/11	Fri 7/1/11
33	**IHX Code Case**		**585 days**	**Mon 10/5/09**	**Fri 12/30/11**
34	**Materials Code Case**	**HTS-01-18**	585 days	Mon 10/5/09	Fri 12/30/11
35	**Design Code Case**	**HTS-01-19**	585 days	Mon 10/5/09	Fri 12/30/11

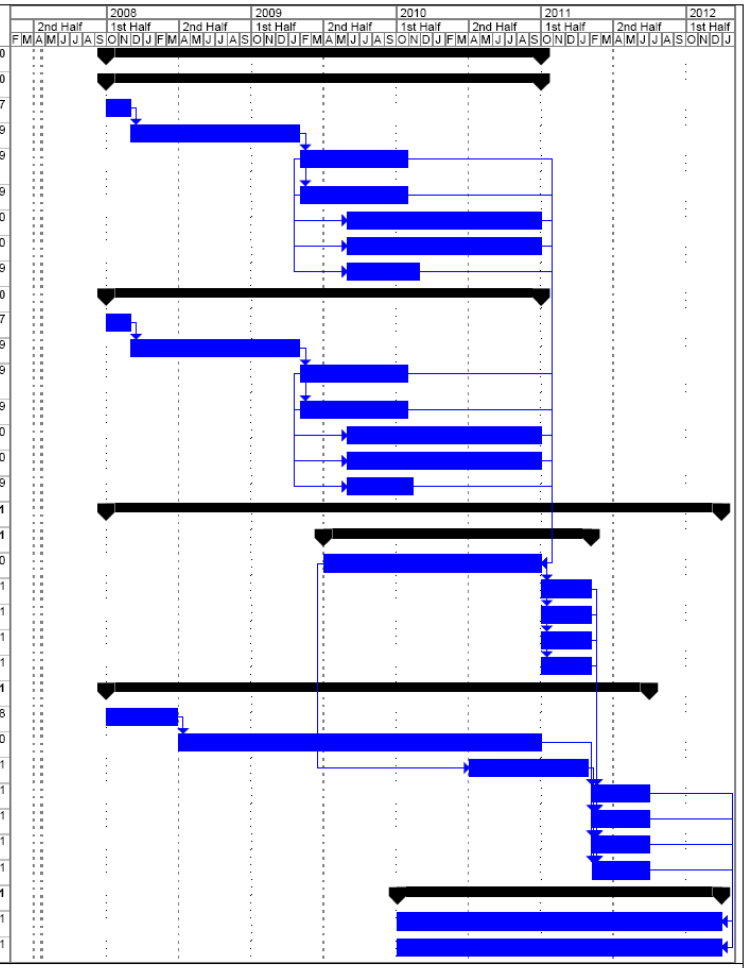

Project: Metallic IHX R+D
Date: Thu 4/19/07

Task | Progress | Milestone | Summary | Rolled Up Task | Rolled Up Milestone | Rolled Up Progress | Split | External Tasks | Project Summary | Group By Summary | Deadline

Page 1

Figure 16.3-1: R&D Schedule – Metallic IHX

16.3.2.3 Manpower and Cost

The estimated costs of the R&D activities supporting the metallic IHX are shown in Figure 16.3-2. Estimates are provided in terms of the labor man-years over time and the total labor and non-labor costs in 2007 dollars. An average labor rate of [$150/hour] has been applied, which is judged to be representative of a U.S. National Laboratory when considering a composite of technicians, engineers/scientists and managers. An average of 2080 man-hours/man-year (MY) has been assumed for the development of MY estimates. These estimates are presently based on judgment and are acknowledged to have significant uncertainties at this early stage of development. The new heat transfer test facility, noted above, accounts for $10.25M of the total cost ($2.25M Labor/$8M for Materials & Other) over the period 2008 through 2010.

Table 16.3-2: Metallic IHX R&D Cost

Item	FY08	FY09	FY10	FY11	FY12	Total
Labor (MY)						
Materials Development	0.2	4.5	4.5	0	0	9
Methods V&V	5.6	5.7	5.7	5.7	.4	23
Total	5.8	10.2	10.2	5.7	.4	32
Labor Cost (K$ @ $150/hr and 2080hr/MY)						
Materials Development	46	1404	1404	0	0	2854
Methods V&V	1740	1768	1768	1768	130	7174
Subtotal	1746	3172	3172	1768	130	10028
Materials & Other (K$)						
Materials Development	126	200	300	0	0	626
Methods V&V	2000	3500	2500	185	184	8369
Subtotal	2126	3700	2800	185	184	8995
Total Cost (K$)						
Materials Development	172	1604	1704	0	0	3480
Methods V&V	3740	5268	4268	1953	314	15543
Total	3912	6872	5972	1953	314	19024

16.3.3 Intermediate Heat Exchanger (Ceramic/Composite) R&D Plan

The scope and schedule of R&D activities supporting the ceramic/composite IHX and fulfilling the requirements of DDNs HTS-02-01 through HTS-02-06 are depicted in Figure 16.3-2. The approach to planning is based on two premises. First, there is a non-trivial risk that an acceptable metallic heat exchanger will not result from the R&D activities outlined in Section 16.3.2. For that reason, it is proposed that development of the ceramic/composite alternative be conducted in parallel with the metallic development. This provides a fallback position for the NGNP IHX if the reference path is not successful. Secondly, even if the reference metallic path is successful, the ceramic/composite option is viewed as a basis for enhancing the performance and economics of follow-on commercial NGNP variants. In particular, it is envisioned that the high-temperature section of the prototype NGNP IHX (IHX A) would be replaced with a ceramic core at the end of its useful life (currently specified as a minimum of 10 years).

16.3.3.1 Scope

Materials Development and Qualification

The R&D plan supporting the ceramic/composite IHX option begins with a review of candidate technologies (DDN HTS-02-01). The result of this step is identification of the reference material and technology that will be the basis for further development. Based on this selection, the R&D associated with DDNs HTS-02-02 provides for characterization of the selected material(s). Characterization, as a minimum includes strength, physical properties (thermal conductivity, thermal expansion coefficient, modulus, etc), fracture toughness and the effects of the PHTS and SHTS helium environment.

Methods Development, Verification and Validation

Methods development, verification and validation begin with the further development of design and analysis methods (HTS-02-03). The relatively lower ductility and fracture-toughness of ceramic materials relative to metals poses incremental challenges for both design and analysis. Existing methods will need to be extended to thin-section microchannel heat exchangers and new methods may be required. A portion of the design and analysis methods development can be undertaken in parallel with materials characterization.

The adequacy of the design and analysis methods developed in response to HTS-02-03 will be verified through performance verification testing, initially at the unit cell and stack level and, subsequently, at the module level (DDN HTS-02-04).

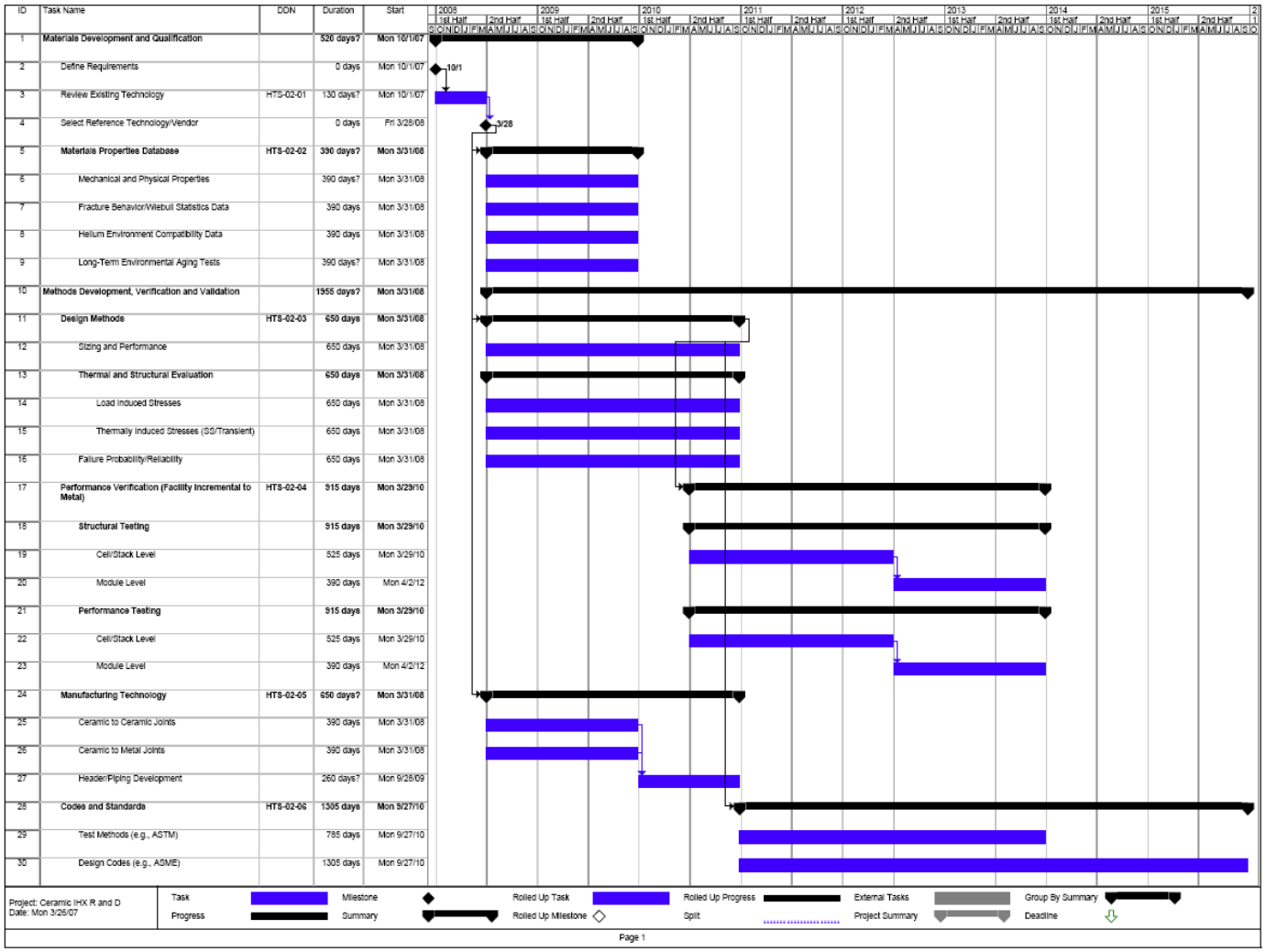

Figure 16.3-2: R&D Schedule - Ceramic IHX

A particular challenge with compact ceramic heat exchangers is the transition from ceramic microchannel cells to meter-size metallic ducts. The initial transitions from cells to stacks and, perhaps, to modules will involve the joining of ceramic components. At some point, there will be a necessary transition from ceramic to metal, while maintaining helium leak tight joints in materials that have significantly different thermal expansion characteristics. The manufacturing technologies associated with these transitions will be addressed by R&D in response to DDN HTS-02-05.

Finally, analogous to the metallic option, the reference R&D plan includes provisions for the development of NGNP-specific code cases for materials and design (HTS-02-06). As before, these code cases would be intended as an interim step, leading to formal inclusion of those materials in the ASME Code. Also, as before, the specific classification of the IHX heat exchanger surface is an issue that will be further addressed during conceptual design.

16.3.3.2 Schedule

Referring to Figure 16.3-2, the initial critical path is the evaluation of candidate technologies and the selection of a reference material and technology for the IHX (HTS-02-01). Thereafter, the characterization of materials, the initial development of design and analysis methods and R&D associated with manufacturing methods may proceed in parallel for some period of time. The results of these activities will be the basis for performance verification testing, which is initially at the cell/stack level and, later, at the larger module scale. The methods development verification and validation process concludes with the development of codes and standards, which relies on input from all of the preceding activities.

16.3.3.3 Cost

The projected costs for the ceramic/composite IHX development effort are summarized in Table 16.3-3. The economic ground rules and assumptions underlying Table 16.3-3 are the same as those elaborated in Section 16.3.2.3. Note that an underlying assumption for methods development, verification and validation is that the facility utilized for verifying the performance of the metallic heat exchanger components described in Section 16.3.2 would also be utilized for verifying the performance of the ceramic IHX components.

Table 16.3-3: Ceramic/Composite IHX R&D Cost

Item	FY08	FY09	FY10	FY11	FY12	FY13	FY14	FY15	Total
Labor (MY)									
Materials Development	5.0	8.0							13.0
Methods V&V	5.0	10.0	15.0	12.0	12.0	12.0	2.0	2.0	70.0
Total	10.0	18.0	15.0	12.0	12.0	12.0	2.0	2.0	83.0
Labor Cost (k$ @ $150/hr and 2080hr/MY)									
Materials Development	1560	2496							4056
Methods V&V	1560	3120	4680	3744	3744	3744	624	624	21840
Subtotal	3120	5616	4680	3744	3744	3744	624	624	25896
Materials & Other (K$)									
Materials Development	210	300							510
Methods V&V	220	640	490	770	520	520	20	20	3200
Subtotal	430	940	490	770	520	520	20	20	3710
Total Cost (K$)									
Materials Development	1770	2796							4566
Methods V&V	1780	3760	5170	4514	4264	4264	644	644	25040
Total	3550	6556	5170	4514	4264	4264	644	644	29606

16.3.4 Secondary Heat Transport System Helium Mixing Chamber R&D Plan

A mixing chamber fabricated from a high temperature metallic alloy and/or other suitable materials is required in the Secondary Heat Transport System circuit to minimize the thermal effects associated with the mixing of two helium streams that are joined together at significantly different temperatures. A mixing chamber is required in the NGNP (but not in follow-on commercial plants) because in the NGNP only a portion (~1/4) of the IHX outlet flow will be routed directly to the PCHX, with the remainder being sent directly to the steam generator. The stream exiting the PCHX is to be remixed with the higher temperature main stream before it reaches the steam generator. A single DDN (HTS-03-01) has been identified for this component.

16.3.4.1 Scope

Materials Development and Qualification

Materials development, if required for this component, is expected to be enveloped by the metallic IHX development activities described in Section 16.3.2. R&D specific to the mixing chamber is limited to performance testing.

Methods Development, Verification and Validation

The R&D program required to validate the performance of the mixing chamber comprises a performance test that will subject a prototype mixing chamber to the conditions projected for the NGNP.

16.3.4.2 Schedule

The schedule for the mixing chamber performance test is shown in Figure 16.3-3. The duration of the schedule is two years, and is based upon supporting the milestone for ordering of materials for construction start.

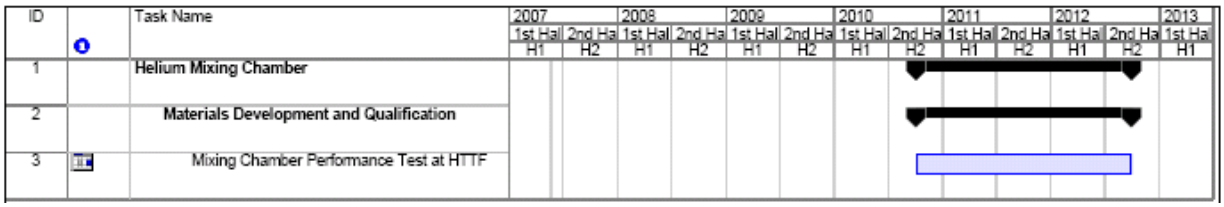

Figure 16.3-3: R&D Schedule – Mixing Chamber

16.3.4.3 Cost

The cost for mixing chamber performance verification testing, summarized in Table 16.3-4 includes materials and labor, using the same ground rules as described in Section 16.3.2.3. An underlying assumption is that the testing will be performed in the metallic alloy prototype IHX performance verification facility noted in DDN-HTS-01-17, or other existing facility.

Table 16.3-4: SHTS Helium Mixing Chamber R&D Cost

Item	FY08	FY09	FY10	FY11	FY12	FY13	Total
Labor (MY)							
Materials Development							
Methods V&V				2.0	2.0		4.0
Total				2.0	2.0		4.0
Labor Cost (k$ @ $150/hr and 2080hr/MY)							
Materials Development							
Methods V&V				624	624		1248

Subtotal				**624**	**624**		**1248**
Materials & Other (K$)							
Materials Development							
Methods V&V				**500**	**500**		**1000**
Subtotal				**500**	**500**		**1000**
Total Cost (K$)							
Materials Development							
Methods V&V				**1124**	**1124**		**2248**
Total				**1124**	**1124**		**2248**

16.3.5 High-Temperature Ducts and Insulation

High-temperature ducts and/or insulation are required within the HTS pressure boundary components (IHX vessels and piping) because the helium flows from the reactor to the IHX and, thence, to the PCHX are at high temperatures (950ºC from the reactor to the IHX and 900ºC from the IHX to the PCHX, respectively). The PHTS pressure boundary (with the possible exception of the IHX heat transfer surface) is defined ASME Section III Class 1 pressure boundary and utilizes conventional SA508/SA533 low-alloy steel materials. These pressure boundary components must remain at 371ºC or less for normal operational service conditions. The current design is to provide active cooling of the pressure boundary for the highest temperature sections of the PHTS. These include the piping from the reactor to IHX A and from IHX A to IHX B, plus the IHX A vessel. A less complex passively insulated piping system will also be evaluated during conceptual design. Other high temperature piping systems include the secondary piping connecting the IHX and PCHX and the secondary piping connecting the IHX and steam generator. These piping systems will be evaluated with insulation systems only with no active cooling. Verification testing of these components is specified in DDN HTS-04-01. Other piping components, plus the IHX B vessel will operate at 660ºC or less and are not included in the scope of this DDN.

16.3.5.1 Scope

Materials Development and Qualification

Materials development is not presently anticipated for the high-temperature ducts and insulation. Requirements for metallic materials are expected to be enveloped by the metallic IHX development activities described in Section 16.3.2. Insulation will be adapted from the PBMR-DPP and/or prior German experience. This assumption regarding materials development will be revisited during conceptual design in conjunction with the ducts and insulation special study outlined in Section 6.4.2.

Methods Development, Verification and Validation

The R&D program required to validate the performance of the high-temperature ducts and insulation comprises a series of performance and environmental tests that will subject prototypical duct and insulation components, or parts thereof, to conditions representative of those found in the HTS. The principal objective of these tests is to verify the adequacy of thermal insulation and its stability under HTS environmental conditions. Examples of envisioned tests include determining effective thermal conductivity of representative assemblies in helium, environmental and aging tests in helium and the effects of vibration. At this point, large-scale flow tests are not envisioned, since the NGNP will obtain input from the PBMR-DPP, which utilizes an actively cooled design in the high-temperature sections. The latter will facilitate validation of analysis methods to be applied.

The scope of the ducts and insulation R&D activities will be revisited during conceptual design in conjunction with the ducts and insulation special study outlined in Section 6.4.2.

16.3.5.2 Schedule

The schedule for the high-temperature ducts and insulation R&D effort is also shown on Figure 16.3-4. The duration of the schedule is two years, and is based upon providing input to the Final Integrated Safety Analysis in 2010. An underlying assumption is that the testing is to take place in the PBMR High-Temperature Test Facility (HTTF) or other existing facility. If a new facility is to be used, the schedule would have to be adjusted accordingly.

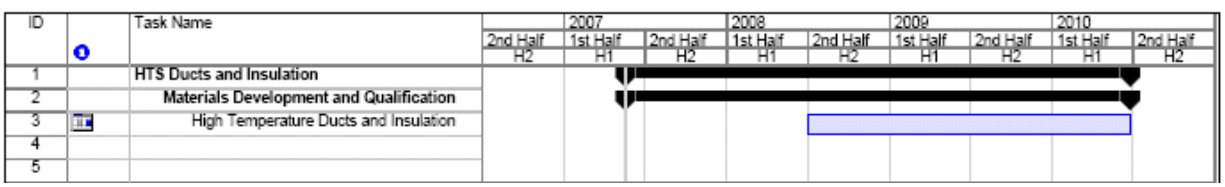

Figure 16.3-4: R&D Schedule – Ducts and Insulation

16.3.5.3 Cost

The cost for high-temperature ducts and insulation verification testing, summarized in Table 16.3-5 includes materials and labor, using the same ground rules as described in Section 16.3.2.3. As noted in Section 16.3.5.1, above, it is assumed that the need for large-scale flow tests will be avoided by extrapolation from PBMR-DPP development. As further noted in Section 0, an underlying assumption is that the testing will be performed in the HTTF, or other existing facility. Again, these assumptions will be revisited in conjunction with the conceptual design special study addressing high-temperature ducts and insulation that is outlined in Section 6.4.2.

Table 16.3-5: HTS Ducts and Insulation R&D Cost

Item	FY08	FY09	FY10	FY11	FY12	FY13	Total
Labor (MY)							
Materials Development							
Methods V&V	0.5	2.0	1.5				4.0
Total	0.5	2.0	1.5				4.0
Labor Cost (k$ @ $150/hr and 2080hr/MY)							
Materials Development							
Methods V&V	156	624	468				1248
Subtotal	156	624	468				1248
Materials & Other (K$)							
Materials Development							
Methods V&V	200	500	300				1000
Subtotal	200	500	300				1000
Total Cost (K$)							
Materials Development							
Methods V&V	356	1124	768				2248
Total	356	1124	768				2248

16.3.6 Summary R&D Cost and Schedule for Heat Transport Facility

The Heat Transport Facility is a critical NGNP facility which requires significant development effort, largely in the materials area, to demonstrate that a design can be developed for the high temperatures, pressures and transients expected in the NGNP. Most critical is development related to the IHX, which is enabling not only for the NGNP, but for process heat applications, in general. Given the high technical risk associated with this component, parallel efforts are recommended that address the most promising metallic and ceramic materials. Further, two of the most promising metallic materials are to be developed in parallel until characterization efforts provide a clearer path to selection. The results will support design- and materials-specific ASME code cases for the NGNP and, perhaps, for early commercial plants. Based on these efforts, a final design for the IHX will be developed and the R&D Plan includes manufacturing and testing one or more suitable prototypes. The total cost for IHX development is estimated to be $53 M which includes $10.25 M for an IHX test facility at INL. The IHX Technology Development is projected to take about 8 years to complete.

The remaining components supported by the Heat Transport Facility R&D Plan are the Helium Mixing Chamber and High-Temperature Ducts and Insulation. While the data needs for these components is highly important, the level of risk is evaluated to be overall lower than in the case of the IHX. The cost for developing the Helium Mixing Chamber is about $2.2M and expected to take about 2 years to complete. For the High-Temperature Ducts and Insulation, the estimated cost is the same, about $2.2M, with about 3 years to completion.

Overall, the development supporting the Heat Transport Facility is expected to cost approximately $53M over a period of 8 years.

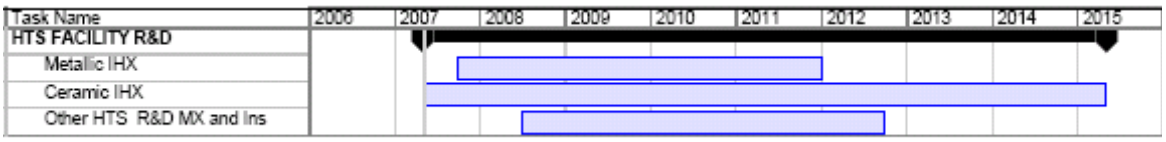

Heat Transport System	FY08	FY09	FY10	FY11	FY12	FY13	FY14	FY15	TOTAL
Metallic IHX	$3.9	$6.9	$6.0	$2.0	$0.3				$19.0
Ceramic IHX	$3.6	$6.6	$5.2	$4.5	$4.3	$4.3	$0.6	$0.6	$29.6
HTS Other (Mx & Ins)	$0.4	$1.1	$0.8	$1.1	$1.1				$4.5
Subtotal	**$7.8**	**$14.6**	**$11.9**	**$7.6**	**$5.7**	**$4.3**	**$0.6**	**$0.6**	**$53.1**

Figure 16.3-5: Integrated R&D Schedule and Cost for HTS

16.4 HYDROGEN PRODUCTION FACILITY

16.4.1 Design Data Needs

This section provides an overview of design data needs pertaining to the Hydrogen Production Facility and, specifically, the Hydrogen Production System (HPS). In a few of the areas addressed by these DDNs, not enough work has been done to fully specify a Design Data Need. It is; for example, clear that for a HyS plant, appropriate materials will have to be identified for each of the demanding services in the acid loop. Neither the specific services nor candidate materials have as yet been identified. Some of these areas may generate additional DDNs. Feed purification may not be adequate to control the impurities in the acid loop to the required levels. Additional purification technology may have to be identified and tested. Design Data Needs (DDNs) related to the HPS are listed in Table 16.4-1 and are discussed in more detail in Section 7.4. As can be seen from this table, DDNs have been identified in support of nine areas. Two of these (HPS-01 Basic Data and HPS-02 Supplementary Materials) are general areas that support the entire system. The other seven support specific HPS subsystems or components. These are the Sulfuric Acid Decomposer (Decomposer), Sulfuric Acid Concentrator (Concentrator), Electrolyzer, Feed Purification, Sulfur Dioxide Absorbers, Product Purification and Controls and Instrumentation. In the case of the Decomposer and Concentrator, the design path forward is not yet clear. Additional conceptual design work is required. Nevertheless, the DDNs will be similar for these systems regardless of the design. The R&D plan has been prepared to accommodate this uncertainty.

For Basic Data, DDNs provide for the confirmation of previously estimated thermodynamic data for the sulfuric acid/ sulfur dioxide/ sulfur trioxide/ oxygen/ water system, gathering adequate reaction kinetics data for sulfuric acid decomposition and analyzing and incorporating these data into an improved process simulation (HPS-01-01 through HPS-01-03). The Supplementary Materials category includes the characterization and qualification of materials and, in some cases, for the development of methods for design and analysis of secondary materials of construction such as gasketing, seals, welding materials, cladding and coating, and piping (HPS-02-01 through HPS-02-5). Feed Purification (HPS-03-1 through HPS-03-4) provides for testing the Decomposer and Electrolyzers for tolerance to impurities likely to be found in the system and for the testing of methods of feed purification to avoid the accumulation of these impurities. The Decomposer DDNs (HPS-04-01 through 07) include catalyst development, materials development, pilot testing and code case support. Note that two reference materials have been identified for the IHX, Alloy 617 and Alloy 230. These same materials will be tested for the PCHX design. In addition to the aging testing called for in DDNs HTS-01-04 and HTS-01-10, DDN-04-03 calls for additional testing in appropriate environments for the PCHX Pending down selection, qualification of both materials will be undertaken in parallel. Likewise HPS-04-07 is intended to supplement the work done in HTS-01-18 and HTS-01-19 to support a code case for the PCHX.

DDNs HPS-05-01 and HPS-06-1 are expected to specify tests run in a packing vendor's laboratory or supervised by a packing vendor to measure the interphase mass transfer characteristics of the Concentrator and SO_2 Absorbers. DDNs HPS-07-01 through HPS-07-06 specify the stages of development and scale-up for the electrolyzers. Identifying product impurities in the pilot plant and testing commercial technologies for product purification are called for in HPS-08-01 and HPS-08-02. HPS-09-01 through HPS-09-03 specify the activities needed to develop the sensing and control elements required to successfully monitor and control this process.

Table 16.4-1: Hydrogen Production System DDNs

DDN	Title	Section Ref.
HPS-01	**Basic Data**	**7.4.1**
HPS-01-01	Confirm Thermodynamic Data for the HyS Process	
HPS-01-02	Gather Reaction Kinetics Data	
HPS-01-03	Analyze Data and Improve Simulation	
HPS-02	**Supplementary Materials**	**7.4.2**
HPS-02-01	Develop Gasket Materials and Design	
HPS-02-02	Develop Seal Materials and Design	
HPS-02-03	Develop Welding Materials	
HPS-02-04	Develop Cladding and Coating Materials	
HPS-02-05	Develop Piping Materials and Design Methods	
HPS-03	**Feed Purification**	**7.4.3**
HPS-03-01	Determine Decomposer Tolerance for Impurities	
HPS-03-02	Determine Electrolyzer Tolerance for Impurities	
HPS-03-03	Test Sulfuric Acid Decomposition Methods	
HPS-03-04	Test Feed Water Purification Methods	
HPS-04	**Decomposer**	**7.4.4**
HPS-04-01	Develop a Commercial Sulfuric Acid Decomposition Catalyst	
HPS-04-02	Test Silicon Carbide and other Ceramic Material in Decomposition Service	
HPS-04-03	Test Alloy 230 and Alloy 617 in a High Temperature Sulfuric Acid, Sulfur Dioxide and Oxygen Atmosphere	
HPS-04-04	Develop a Method to Bond Alloy 230 or Alloy 617 or Similar Materials to Silicon Carbide and other Ceramics	
HPS-04-05	Develop Materials to Seal the Joints between Ceramic Decomposer Elements and the Metallic Tubesheet or Vessel	
HPS-04-06	Test a Pilot-scale Decomposer	
HPS-04-07	Data Supporting Design Code Case	
HPS-05	**Sulfuric Acid Concentrator**	**7.4.5**
HPS-05-01	Measure the Height Equivalent to a Theoretical Plate (HETP) for the Concentrator	

DDN	Title	Section Ref.
HPS-06	**SO2 Absorbers**	**7.4.6**
HPS-06-01	Measure the Height Equivalent to a Theoretical Plate (HETP) for the SO_2 Absorbers	
HPS-07	**Electrolyzers**	**7.4.7**
HPS-07-01	Optimize Catalyst Loading in the Electrodes	
HPS-07-02	Develop a Cell Membrane	
HPS-07-03	Develop a Cell Configuration and Materials	
HPS-07-04	Build and Test a Prototype Cell	
HPS-07-05	Build and Test a Pilot-scale Cell	
HPS-07-06	Build and Test a Stack of Cells in a Pilot Plant	
HPS-08	**Product Purification**	**7.4.8**
HPS-08-01	Identify Product Impurities	
HPS-08-02	Test Product Purification Methods	
HPS-09	**Instrumentation and Controls**	**7.4.9**
HPS-09-01	Test Sensors in the Pilot Plant	
HPS-09-02	Develop valves for High-Temperature Acid Service	
HPS-09-03	Test Valves in the Pilot Plant	

16.4.2 Basic Data R&D Plan

The scope and schedule of R&D activities supporting the gathering and analysis of basic data and fulfilling the requirements of DDNs HPS-01-01 through HPS-01-03 are shown in Figure 16.4-1.

16.4.2.1 Scope

The scope of the R&D plan supporting the gathering and analysis of basic data provides for bench-scale laboratory activities gathering thermodynamic and phase equilibrium data as detailed in DDN HPS-01-01 (Section 7.4.1). A separate series of bench-scale laboratory work will gather data on the reaction kinetics of the sulfuric acid decomposition reaction. The requirements of these data are described in DDN HPS-01-02. Once these data are collected, data will be analyzed and used in the development of equilibrium and reaction kinetic models suitable for inclusion into a process simulation model.

16.4.2.2 Schedule

As shown in Figure 16.4-1, the basic data gathering and analysis run concurrently with the Conceptual Design activities. Ideally, the data model would be complete before the Conceptual Design begins. It must be ready before the beginning of the Preliminary Design. The beginning of the Conceptual Design has not been delayed for the lack of this data because

the confidence level in the existing data models is moderately high. Major revisions to the process based on this data are not expected. On the other hand, the possibility of developing additional DDNs that are necessary for Preliminary Design in the course of the Conceptual Design is quite high. The risk to the schedule is greater due to R&D for these DDNs than for adjustments due to changes in basic data.

ID	Task Name	DDN	Duration	Start	Finish
1	Conceptual Design		15 mons	Mon 10/1/07	Fri 11/21/08
2	Preliminary Design		18 mons	Mon 9/23/13	Fri 2/6/15
3	Final Design		18 mons	Fri 6/19/15	Thu 11/3/16
4	**Basic Data**	**HPS-01**	**420 days**	**Mon 10/1/07**	**Fri 5/8/09**
5	Thermodynamic data	HPS-01-01	12 mons	Mon 10/1/07	Fri 8/29/08
6	Reaction kinetics data	HPS-01-02	12 mons	Mon 10/1/07	Fri 8/29/08
7	Data analysis and model	HPS-01-03	9 mons	Mon 9/1/08	Fri 5/8/09
8	**Supplementary Materials**	**HPS-02**	**480 days**	**Mon 11/24/08**	**Fri 9/24/10**
14	**Feed purification**	**HPS-03**	**175 days**	**Mon 6/10/13**	**Fri 2/7/14**
20	**Decomposer**	**HPS-04**	**1485 days**	**Mon 10/1/07**	**Fri 6/7/13**
29	**Sulfuric Acid Concentrator**	**HPS-05**	**240 days**	**Mon 11/24/08**	**Fri 10/23/09**
31	**SO2 Absorbers**	**HPS-06**	**240 days**	**Mon 11/24/08**	**Fri 10/23/09**
33	**Electrolyzer**	**HPS-07**	**2400 days**	**Mon 10/1/07**	**Fri 12/9/16**
43	**Product Purification**	**HPS-08**	**94 days**	**Mon 2/9/15**	**Thu 6/18/15**
46	**Instrumentation and Controls**	**HPS-09**	**480 days**	**Mon 9/27/10**	**Fri 7/27/12**

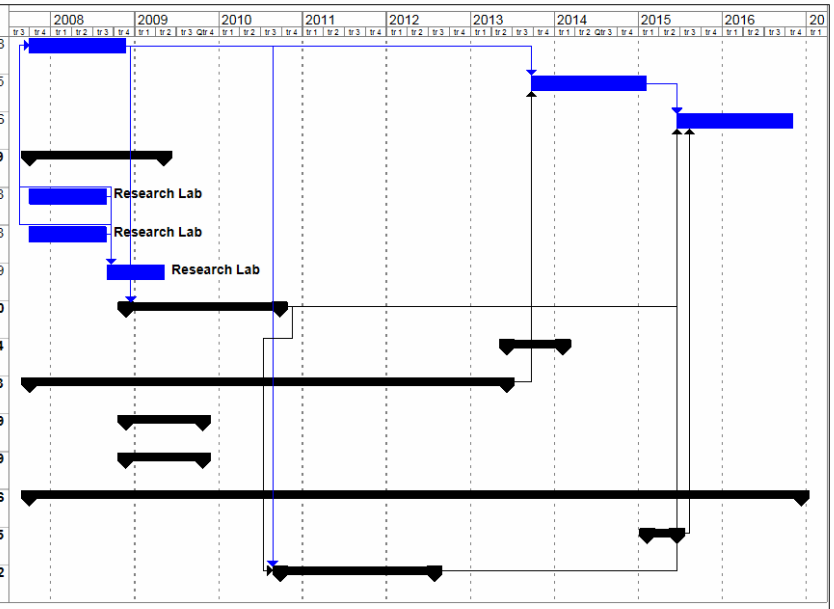

Project: Hydrogen RMon 4/9/07 Plan
HPS-01 Basic Data
Date: Mon 4/9/07

Task | Progress | Summary | External Tasks | Deadline
Split | Milestone | Project Summary | External Milestone

Page 1

Figure 16.4-1: **R&D Schedule - Basic Data**

16.4.2.3 Manpower and Cost

The estimated costs of the R&D activities supporting the basic data gathering and analysis are shown in Table 16.4-2. Estimates are provided in labor man-years and the total labor and non-labor costs in 2007 dollars. An average labor rate of $154/hour has been applied, which is judged to be representative of a U.S. National Laboratory or comparable facility when considering a composite of technicians, engineers/scientists and managers. The labor rate from task to task varies depending upon the proportion of professional to non-professional labor. An average of 2000 man-hours/man-year (MY) has been assumed for the development of MY estimates. These estimates are based on judgment and have significant uncertainties at this early stage of development. Note that rounding errors may cause the column totals to be slightly different than what is shown.

Table 16.4-2: Basic Data Costs

Item	FY08	FY09	FY10	FY11	FY12	Total
Labor (MY)						
Thermodynamic data	1.3	0	0	0	0	1.3
Reaction kinetics data	1.3	0	0	0	0	1.3
Data analysis and model	0	0.8	0	0	0	.8
Total	2.5	0.8	0	0	0	3.3
Labor Cost (K$ @ $154/hr and 167h/MM)						
Thermodynamic data	350	0	0	0	0	350
Reaction kinetics data	350	0	0	0	0	350
Data analysis and model	0	300	0	0	0	300
Subtotal	700	300	0	0	0	1000
Materials & Other (K$)						
Thermodynamic data	100	0	0	0	0	100
Reaction kinetics data	200	0	0	0	0	200
Data analysis and model	0	0	0	0	0	0
Subtotal	300	0	0	0	0	300
Total Cost (K$)						
Thermodynamic data	450	0	0	0	0	450
Reaction kinetics data	550	0	0	0	0	550
Data analysis and model	0	300	0	0	0	300
Total	1000	300	0	0	0	1300

16.4.3 Supplementary Materials R&D Plan

The scope and schedule of R&D activities supporting the gathering and analysis of basic data and fulfilling the requirements of DDNs HPS-02-01 through HPS-02-05 are shown in Figure 16.4-2.

16.4.3.1 Scope

The scope of the R&D plan supporting the Supplementary Materials DDNs is currently little more than a placeholder for tasks that are anticipated to be required to reach commercialization of HyS technology. the environments anticipated in this process are extremely aggressive and although selection of primary materials of construction have been addressed in a preliminary fashion for parts of the process, many of the supplementary materials as are listed here have not been. Some R&D work will be required in this area, but the details of this work have not yet been identified. This is expected to take place during Conceptual Design. Some of these materials may require a materials and/or design code case to be developed.

16.4.3.2 Schedule

The development of supplementary materials may be on the critical path to construction and startup of the NGNP HPS. Appropriate materials must be developed before valve development can progress. The required selection of all supplementary materials should be made prior to the start of the Preliminary Design and these materials must be available for testing and validation during pilot plant operations. Testing of existing materials in the anticipated environments can begin immediately, but success of such testing is not expected.

16.4.3.3 Manpower and Cost

The estimated costs of the R&D activities supporting the development of supplementary materials are shown in Table 16.3-3. Estimates are provided in labor man-years and the total labor and non-labor costs in 2007 dollars. An average labor rate of $147/hour has been applied, which is judged to be representative of a U.S. National Laboratory or comparable facility when considering a composite of technicians, engineers/scientists and managers. The labor rate from task to task varies depending upon the proportion of professional to non-professional labor. An average of 2000 man-hours/man-year (MY) has been assumed for the development of MY estimates. These estimates are based on judgment and have significant uncertainties at this early stage of development. Note that rounding errors may cause the column totals to be slightly different than what is shown.

Table 16.4-3: Supplementary Materials R&D Cost

Item	FY08	FY09	FY10	FY11	FY12	Total
Labor (MY)						
Gaskets	0	1.4	1.4	0	0	2.9
Seals	0	1.4	1.4	0	0	2.9
Welding Materials	0	1.4	1.4	0	0	2.9
Cladding and Coatings	0	1.4	1.4	0	0	2.9
Piping	0	1.4	1.4	0	0	2.9
Total	0	7.1	7.1	0	0	14.3
Labor Cost (K$ @ $147/hr and 167h/MM)						
Gaskets	0	420	420	0	0	840
Seals	0	420	420	0	0	840
Welding Materials	0	420	420	0	0	840
Cladding and Coatings	0	420	420	0	0	840
Piping	0	420	420	0	0	840
Subtotal	0	2100	2100	0	0	4200
Materials & Other (K$)						
Gaskets	0	240	120	0	0	360
Seals	0	240	120	0	0	360
Welding Materials	0	240	120	0	0	360
Cladding and Coatings	0	240	120	0	0	360
Piping	0	240	120	0	0	360
Subtotal	0	1200	600	0	0	1800
Total Cost (K$)						
Gaskets	0	660	540	0	0	1200
Seals	0	660	540	0	0	1200
Welding Materials	0	660	540	0	0	1200
Cladding and Coatings	0	660	540	0	0	1200
Piping	0	660	540	0	0	1200
Total	0	3300	2700	0	0	6000

ID	Task Name	DDN	Duration	Start	Finish
1	Conceptual Design		15 mons	Mon 10/1/07	Fri 11/21/08
2	Preliminary Design		18 mons	Mon 9/23/13	Fri 2/6/15
3	Final Design		18 mons	Fri 6/19/15	Thu 11/3/16
4	**Basic Data**	**HPS-01**	**420 days**	**Mon 10/1/07**	**Fri 5/8/09**
8	**Supplementary Materials**	**HPS-02**	**480 days**	**Mon 11/24/08**	**Fri 9/24/10**
9	Gaskets	HPS-02-01	24 mons	Mon 11/24/08	Fri 9/24/10
10	Seals	HPS-02-02	24 mons	Mon 11/24/08	Fri 9/24/10
11	Welding materials	HPS-02-03	24 mons	Mon 11/24/08	Fri 9/24/10
12	Cladding and coatings	HPS-02-04	24 mons	Mon 11/24/08	Fri 9/24/10
13	Piping	HPS-02-05	24 mons	Mon 11/24/08	Fri 9/24/10
14	**Feed purification**	**HPS-03**	**175 days**	**Mon 6/10/13**	**Fri 2/7/14**
20	**Decomposer**	**HPS-04**	**1485 days**	**Mon 10/1/07**	**Fri 6/7/13**
29	**Sulfuric Acid Concentrator**	**HPS-05**	**240 days**	**Mon 11/24/08**	**Fri 10/23/09**
31	**SO2 Absorbers**	**HPS-06**	**240 days**	**Mon 11/24/08**	**Fri 10/23/09**
33	**Electrolyzer**	**HPS-07**	**2400 days**	**Mon 10/1/07**	**Fri 12/9/16**
43	**Product Purification**	**HPS-08**	**94 days**	**Mon 2/9/15**	**Thu 6/18/15**
46	**Instrumentation and Controls**	**HPS-09**	**480 days**	**Mon 9/27/10**	**Fri 7/27/12**

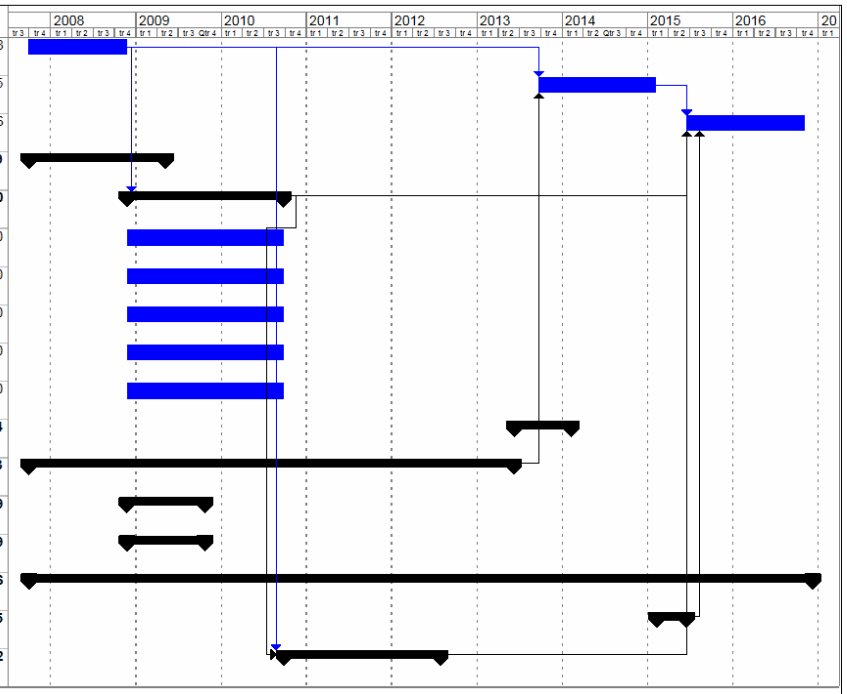

Project: Hydrogen RMon 4/9/07 Plan
HPS-01 Basic Data
Date: Mon 4/9/07

Task | Split | Progress | Milestone | Summary | Project Summary | External Tasks | External Milestone | Deadline

Page 1

Figure 16.4-2: R&D Schedule - Supplementary Materials

16.4.4 Feed Purification R&D Plan

The scope and schedule of R&D activities supporting the determination of the tolerance of HyS process components to impurities in the process fluids and the development of steps to prevent the accumulation of such impurities are shown in Figure 16.4-3. This scope and schedule meets the requirements of DDNs HPS-03-01 through HPS-03-04.

16.4.4.1 Scope

The scope of the R&D plan setting the feed purification requirements for the NGNP HPS includes the determination of the tolerance of the sensitive components of the system to impurities in the process fluids. All feeds enter the system as liquids and all products leave as gases. This means an inevitable accumulation of dissolved impurities. The Decomposer catalyst and the Electrolyzer membranes may be particularly susceptible to deterioration due to impurities. This susceptibility is best tested during pilot plant operations where the equipment is constructed of commercial materials and corrosion products will approach those present in commercial operations. Once the tolerance is determined, a strategy can be devised to operate below the threshold. This strategy is expected to include purification of the feed water and possibly the make-up sulfuric acid or sulfur dioxide. The scope and schedule assume that existing commercial methods can be used and that these require only confirmatory testing in a vendor's laboratory.

16.4.4.2 Schedule

As shown in Figure 16.4-3, impurity tolerance determinations are carried out at the end of pilot plant operations and during Preliminary Design. This is because the best test of impurity tolerance occurs only after equipment has been in operation for an extended period of time. This causes an added risk to the schedule because it leaves very little time before a design selection must be made. This will not impact the hydrogen plant design, construction and startup schedule only if the assumption that impurity levels can be controlled adequately with existing commercial technology holds true. This assumption should be confirmed during Conceptual Design and the schedule adjusted accordingly. It may be possible to carry out tolerance testing earlier in pilot plant operations and thus gain more time for feed purification testing and possibly process development.

16.4.4.3 Manpower and Cost

The estimated costs of the R&D activities supporting the development feed purification and impurity control methods are shown in Table 16.4-4. Estimates are provided in labor man-years and the total labor and non-labor costs in 2007 dollars. An average labor rate of $147/hour has been applied, which is judged to be representative of a U.S. National Laboratory or comparable facility when considering a composite of technicians, engineers/scientists and managers. The labor rate from task to task varies depending upon the proportion of professional to non-professional labor. An average of 2000 man-hours/man-year (MY) has been assumed for the development of MY estimates. These estimates are based on judgment and have significant uncertainties at this early stage of development. Note that rounding errors may cause the column totals to be slightly different than what is shown.

Table 16.4-4: Feed Purification R&D Cost

Item	FY10	FY11	FY12	FY13	FY14	Total
Labor (MY)						
Decomposer impurity tolerance testing	0	0	0	0.4	0	0.4
Electrolyzer impurity tolerance testing	0	0	0	0.4	0	0.4
Sulfuric acid purification testing	0	0	0	0.4	0	0.4
Water purification testing	0	0	0	0.3	0	0.3
Total	0	0	0	1.4	0	1.4
Labor Cost (K$ @ $147/hr and 167h/MM)						
Decomposer impurity tolerance testing	0	0	0	108	0	108
Electrolyzer impurity tolerance testing	0	0	0	108	0	108
Sulfuric acid purification testing	0	0	0	112	0	112
Water purification testing	0	0	0	88	0	88
Subtotal	0	0	0	416	0	416
Materials & Other (K$)						
Decomposer impurity tolerance testing	0	0	0	20	0	20
Electrolyzer impurity tolerance testing	0	0	0	20	0	20
Sulfuric acid purification testing	0	0	0	300	0	300
Water purification testing	0	0	0	30	0	30
Subtotal	0	0	0	370	0	370
Total Cost (K$)						
Decomposer impurity tolerance testing	0	0	0	128	0	128
Electrolyzer impurity tolerance testing	0	0	0	128	0	128
Sulfuric acid purification testing	0	0	0	412	0	412
Water purification testing	0	0	0	118	0	118
Total	0	0	0	786	0	786

ID	Task Name	DDN	Duration	Start	Finish
1	Conceptual Design		15 mons	Mon 10/1/07	Fri 11/21/08
2	Preliminary Design		18 mons	Mon 9/23/13	Fri 2/6/15
3	Final Design		18 mons	Fri 6/19/15	Thu 11/3/16
4	**Basic Data**	**HPS-01**	**420 days**	**Mon 10/1/07**	**Fri 5/8/09**
8	**Supplementary Materials**	**HPS-02**	**480 days**	**Mon 11/24/08**	**Fri 9/24/10**
14	**Feed purification**	**HPS-03**	**175 days**	**Mon 6/10/13**	**Fri 2/7/14**
15	**System tolerance for impurities**		**115 days**	**Mon 6/10/13**	**Fri 11/15/13**
16	Decomposer	HPS-03-01	2 mons	Mon 6/10/13	Fri 8/2/13
17	Electrolyzer	HPS-03-02	2 mons	Mon 9/23/13	Fri 11/15/13
18	Sulfuric acid purification testing	HPS-03-03	3 mons	Mon 11/18/13	Fri 2/7/14
19	Water purification testing	HPS-03-04	3 mons	Mon 11/18/13	Fri 2/7/14
20	**Decomposer**	**HPS-04**	**1485 days**	**Mon 10/1/07**	**Fri 6/7/13**
29	**Sulfuric Acid Concentrator**	**HPS-05**	**240 days**	**Mon 11/24/08**	**Fri 10/23/09**
31	**SO2 Absorbers**	**HPS-06**	**240 days**	**Mon 11/24/08**	**Fri 10/23/09**
33	**Electrolyzer**	**HPS-07**	**2400 days**	**Mon 10/1/07**	**Fri 12/9/16**
43	**Product Purification**	**HPS-08**	**94 days**	**Mon 2/9/15**	**Thu 6/18/15**
46	**Instrumentation and Controls**	**HPS-09**	**480 days**	**Mon 9/27/10**	**Fri 7/27/12**

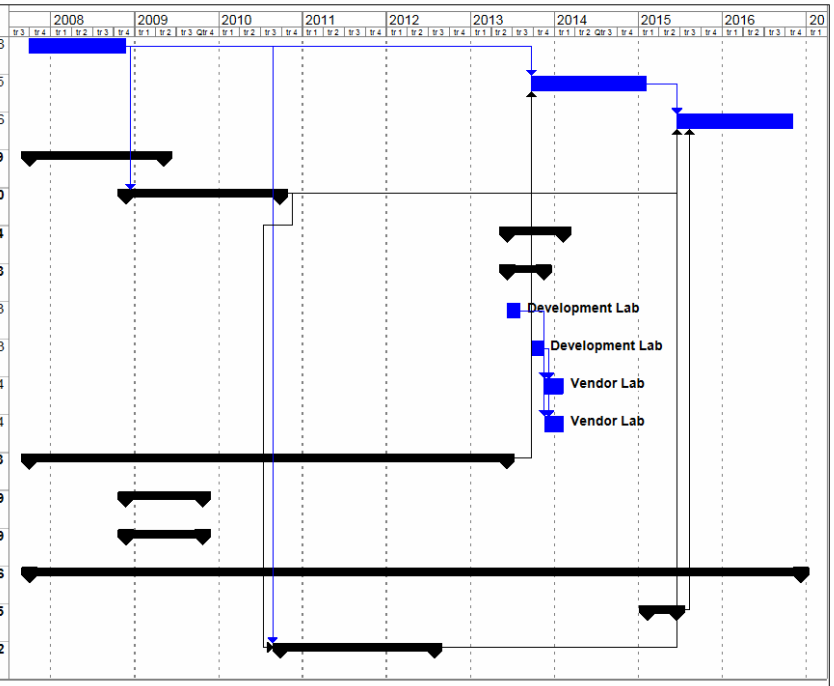

Project: Hydrogen RMon 4/9/07 Plan
HPS-01 Basic Data
Date: Mon 4/9/07

Task | Progress | Summary | External Tasks | Deadline
Split | Milestone | Project Summary | External Milestone

Page 1

Figure 16.4-3: R&D Schedule - Feed Purification

16.4.5 Decomposer R&D Plan

The scope and schedule of R&D activities supporting the design and fabrication of the Decomposer are shown in Figure 16.4-4. This scope and schedule meets the requirements of DDNs HPS-04-01 through HPS-04-07.

16.4.5.1 Scope

The scope of the R&D plan supporting the design and fabrication of the NGNP HPS Decomposer includes the development of a robust commercial sulfur trioxide decomposition catalyst with a life of about 20,000 hours. Catalyst studies would include screening of potential active ingredients in conjunction with the determination of reaction kinetics discussed in Section 16.4.2.1, above. Attractive options developed in this screening will be further screened as prepared on various support materials. The selected catalyst and support combination will then be subjected to long-term life testing. Selection of the catalyst fulfills HPS-04-01.

Silicon carbide is currently the material of choice for use in containing the reactants in the reaction zone of the Decomposer. The activity addressing HPS-04-02 is intended to be supplementary to the ceramic materials development and qualification tasks discussed in Sections 6.3.2 and 16.4.3. This task adds long-term testing in the aggressive sulfuric acid/ sulfur dioxide/ oxygen/ sulfur trioxide/ steam environment.

Current decomposer designs require that hot gas mixtures of sulfuric acid/ sulfur dioxide/ oxygen/ sulfur trioxide/ steam be conveyed from the Decomposer to the Sulfuric Acid Concentrator. This function will require metallic materials that have as yet to be qualified under these conditions. This task, addressing HPS-04-03 is also envisioned as being supplementary to the aging tests on Alloy 617 and Alloy 230 as discussed in Sections 6.3.1 and 16.4.2. It is assumed that any high temperature (> about 750ºC) metallic components of the Decomposer, Concentrator and associated piping will be made from Alloy 617, Alloy 230, or a similar material.

This plan assumes that the Decomposer will be configured similarly to the current Sandia design and that the acid Concentrator will not be incorporated into the Decomposer. Certain advances on this design will significantly reduce the scope, schedule and budget of this plan. On the other hand, if such consolidation is not successful, an exotic metallic material will be required at the process outlet of the Decomposer. Unless an already existing material such as Alloy 617 or Alloy 230 is suitable for this environment, the Decomposer design will probably not be sufficiently developed in time for the NGNP design and construction schedule.

Use of both ceramic and metallic elements in the Decomposer design will require sealing or bonding of the ceramics to metallic materials. Tasks to develop and test such sealing and bonding methods will address DDNs HPS-04-04 and HPS-04-05. These tasks include both development of materials and methods as well as qualification of these methods.

Final testing and verification of the vessel design and fabrication methods as well as the heat transfer and catalytic characteristics of the Decomposer are included in the pilot testing. Testing of valves, sensors, supplementary materials and impurity tolerance discussed elsewhere in this section are carried out in conjunction with Decomposer pilot testing addressing DDN HPS-04-06.

Any data-gathering in addition to that developed in the preceding tasks to support a design code case for the Decomposer and Concentrator are included in the task addressing DDN HPS-04-07. In this case too, it is expected that the efforts will build on those supporting the IHX design.

16.4.5.2 Schedule

As shown in Figure 16.4-4, an R&D schedule for the Decomposer that does not impact the construction and startup dates depends upon activities running concurrently that ideally would not do so. This means that any delay in reaching a successful conclusion in any one of a number of activities could seriously affect the cost and schedule of several others.

Catalyst development can be delayed somewhat without affecting the end date, but materials development for the Decomposer cannot. It is also possible that some of these activities may be rendered superfluous by an improved design of the Decomposer. This however, is outside the scope of the R&D effort.

Ceramic and especially metallic materials testing and qualification efforts are scheduled to run concurrently with similar efforts for the IHX.

16.4.5.3 Manpower and Cost

The estimated costs of the R&D activities supporting the design development of the Decomposer are shown in Table 16.4-5. Estimates are provided in labor man-years and the total labor and non-labor costs in 2007 dollars. An average labor rate of $146 /hour has been applied, which is judged to be representative of a U.S. National Laboratory or comparable facility when considering a composite of technicians, engineers/scientists and managers. The labor rate from task to task varies depending upon the proportion of professional to non-professional labor. An average of 2000 man-hours/man-year (MY) has been assumed for the development of MY estimates. These estimates are based on judgment and have significant uncertainties at this early stage of development. Note that rounding errors may cause the column totals to be slightly different than what is shown.

Table 16.4-5: Decomposer R&D Cost

Item	FY08	FY09	FY10	FY11	FY12	FY13	Total
Labor (MY)							
Develop a commercial sulfur trioxide catalyst	1.5	1.5	0	0	0	0	3.0
Long-term testing of silicon carbide at reactor conditions	1.5	0	0	0	0	0	1.5
Long-term testing of metals at reactor conditions	0	0.8	0.8	0	0	0	1.5
Develop ceramic to metals bonding methods	0	1.4	2.9	2.9	0	0	7.1
Develop metal to ceramic sealing materials and methods	2.9	2.9	1.4	0	0	0	7.1
Construct and Test a Decomposer Pilot Plant	0	0	0	0.8	5.0	4.2	10.0
Gather data supporting a design code case	0	0	0.7	0.9	0	0	1.6
Total	5.9	6.5	5.7	4.5	5.0	4.2	31.8
Labor Cost (K$ @ $146/hr and 167h/MM)							
Develop a commercial sulfur trioxide catalyst	450	450	0	0	0	0	900
Long-term testing of silicon carbide at reactor conditions	450	0	0	0	0	0	450
Long-term testing of metals at reactor conditions	0	225	225	0	0	0	450
Develop ceramic to metals bonding methods	0	420	840	840	0	0	2100
Develop metal to ceramic sealing materials and methods	840	840	420	0	0	0	2100
Construct and Test a Decomposer Pilot Plant	0	0	0	224	1400	1176	2800
Gather data supporting a design code case	0	0	215	262	0	0	477
Subtotal	1740	1935	1700	1326	1400	1176	9277
Materials & Other (K$)							
Develop a commercial sulfur trioxide catalyst	200	100	0	0	0	0	300
Long-term testing of silicon carbide at reactor conditions	360	0	0	0	0	0	360
Long-term testing of metals at	0	260	100	0	0	0	360

Item	FY08	FY09	FY10	FY11	FY12	FY13	Total
reactor conditions							
Develop ceramic to metals bonding methods	0	500	300	100	0	0	900
Develop metal to ceramic sealing materials and methods	600	200	100	0	0	0	900
Construct and Test a Decomposer Pilot Plant	0	0	0	625	3750	1875	6250
Gather data supporting a design code case	0	0	32	21	0	0	53
Subtotal	1160	1060	532	746	3750	1875	9123
Total Cost (K$)							
Develop a commercial sulfur trioxide catalyst	650	550	0	0	0	0	1200
Long-term testing of silicon carbide at reactor conditions	810	0	0	0	0	0	810
Long-term testing of metals at reactor conditions	0	485	325	0	0	0	810
Develop ceramic to metals bonding methods	0	920	1140	940	0	0	3000
Develop metal to ceramic sealing materials and methods	1440	1040	520	0	0	0	3000
Construct and Test a Decomposer Pilot Plant	0	0	0	849	5150	3051	9050
Gather data supporting a design code case	0	0	246	284	0	0	530
Total	2900	2995	2231	2073	5150	3051	18400

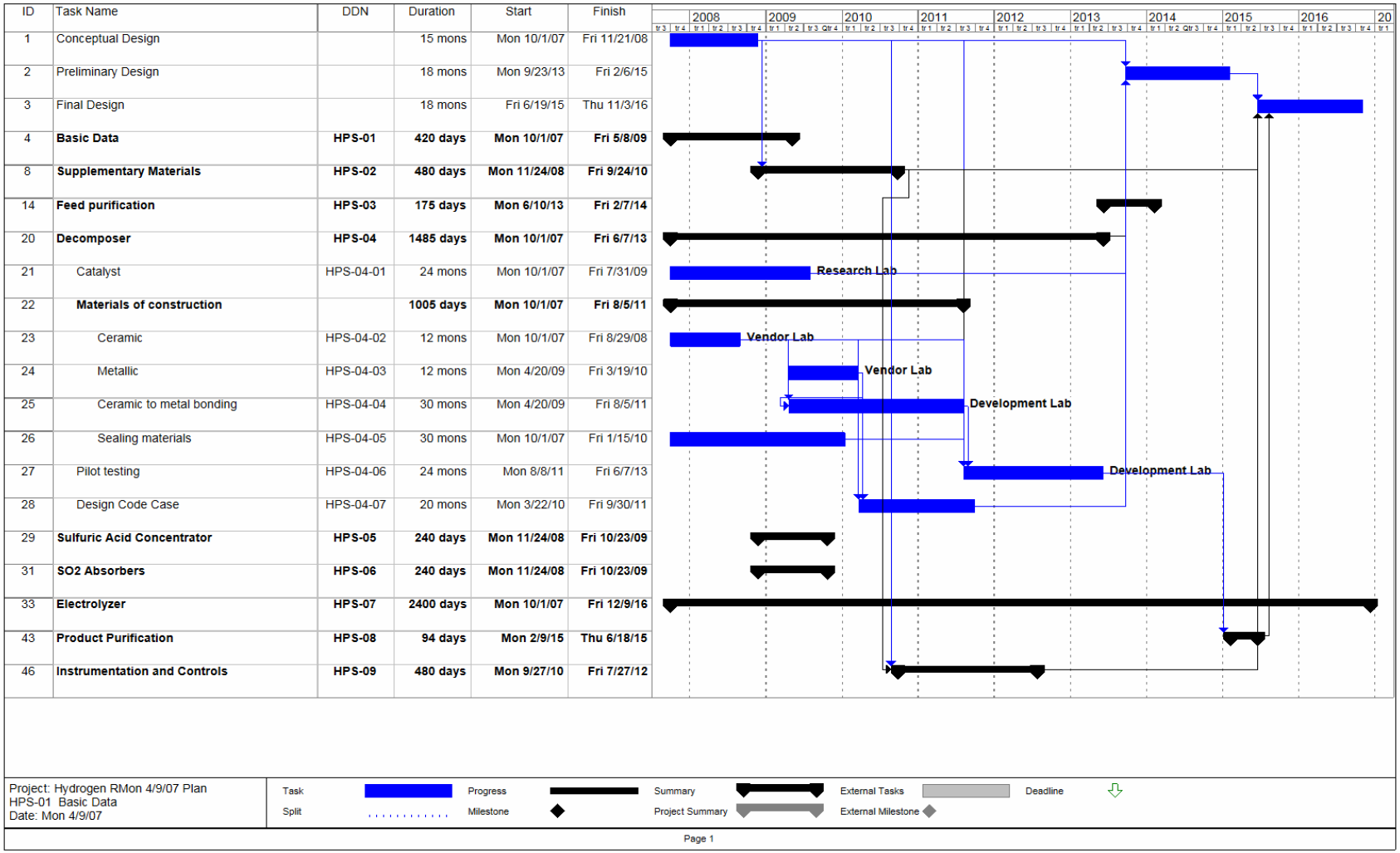

Figure 16.4-4: R&D Schedule - Decomposer

16.4.6 Sulfuric Acid Concentrator and Sulfur Dioxide Absorbers R&D Plan

The scope and schedule of R&D activities supporting the design of the Sulfuric Acid Concentrator (Concentrator) and the Sulfur Dioxide Absorbers (Absorbers) are shown in Figure 16.4-5. This scope and schedule meets the requirements of DDNs HPS-05-01 and HPS-06-01.

16.4.6.1 Scope

The scope of the R&D plan supporting the process design of these components of the NGNP HPS includes measuring the height equivalent to a theoretical plate (HETP) or height of a transfer unit (HTU) for these packed towers. These are measures of the effectiveness of mass transfer for absorbers, strippers, and distillation columns. These pieces of equipment are expected to be packed towers and HETPs or HTUs will have to be measured at the expected operating conditions. If vendor's laboratories are adequately equipped for the expected operating conditions, then this measurement will be straightforward. Appropriate samples can be sent to a packing vendor's laboratory. If the vendors are not so equipped, these measurements can be taken in the pilot plant. Materials of construction and mechanical design of these components are covered by separate DDNs. Decomposer R&D tasks should also cover the Concentrator; Electrolyzer tasks should cover the Absorbers.

16.4.6.2 Schedule

As shown in Figure 16.4-5, it has been assumed that the measurements are carried out in the vendor's laboratory. It is also clear that there is no overall schedule impact if they are measured in the pilot plant.

16.4.6.3 Manpower and Cost

The estimated costs of the R&D activities supporting the development feed purification and impurity control methods are shown in Table 16.4-6. Estimates are provided in labor man-years and the total labor and non-labor costs in 2007 dollars. An average labor rate of $146 /hour has been applied, which is judged to be representative of packing vendor charges when considering a composite of technicians, engineers/scientists and managers. The labor rate from task to task varies depending upon the proportion of professional to non-professional labor. An average of 2000 man-hours/man-year (MY) has been assumed for the development of MY estimates. These estimates are based on judgment and have significant uncertainties at this early stage of development. Note that rounding errors may cause the column totals to be slightly different than what is shown.

Table 16.4-6: Concentrator and Absorber R&D Cost

Item	FY08	FY09	FY10	FY11	FY12	FY13	Total
Labor (MY)							
Measure HETP of Concentrator	0	1.3	0	0	0	0	1.3
Measure HETP of Absorber	0	1.3	0	0	0	0	1.3
Total	0	2.5	0	0	0	0	2.5
Labor Cost (K$ @ $146/hr and 167h/MM)							
Measure HETP of Concentrator	0	350	0	0	0	0	350
Measure HETP of Absorber	0	350	0	0	0	0	350
Subtotal	0	700	0	0	0	0	700
Materials & Other (K$)							
Measure HETP of Concentrator	0	320	0	0	0	0	320
Measure HETP of Absorber	0	120	0	0	0	0	120
Subtotal	0	440	0	0	0	0	440
Total Cost (K$)							
Measure HETP of Concentrator	0	670	0	0	0	0	670
Measure HETP of Absorber	0	470	0	0	0	0	470
Total	0	1140	0	0	0	0	1140

ID	Task Name	DDN	Duration	Start	Finish
1	Conceptual Design		15 mons	Mon 10/1/07	Fri 11/21/08
2	Preliminary Design		18 mons	Mon 9/23/13	Fri 2/6/15
3	Final Design		18 mons	Fri 6/19/15	Thu 11/3/16
4	**Basic Data**	**HPS-01**	**420 days**	**Mon 10/1/07**	**Fri 5/8/09**
8	**Supplementary Materials**	**HPS-02**	**480 days**	**Mon 11/24/08**	**Fri 9/24/10**
14	**Feed purification**	**HPS-03**	**175 days**	**Mon 6/10/13**	**Fri 2/7/14**
20	**Decomposer**	**HPS-04**	**1485 days**	**Mon 10/1/07**	**Fri 6/7/13**
29	**Sulfuric Acid Concentrator**	**HPS-05**	**240 days**	**Mon 11/24/08**	**Fri 10/23/09**
30	HETP tests	HPS-05-01	12 mons	Mon 11/24/08	Fri 10/23/09
31	**SO2 Absorbers**	**HPS-06**	**240 days**	**Mon 11/24/08**	**Fri 10/23/09**
32	HETP	HPS-06-01	12 mons	Mon 11/24/08	Fri 10/23/09
33	**Electrolyzer**	**HPS-07**	**2400 days**	**Mon 10/1/07**	**Fri 12/9/16**
43	**Product Purification**	**HPS-08**	**94 days**	**Mon 2/9/15**	**Thu 6/18/15**
46	**Instrumentation and Controls**	**HPS-09**	**480 days**	**Mon 9/27/10**	**Fri 7/27/12**

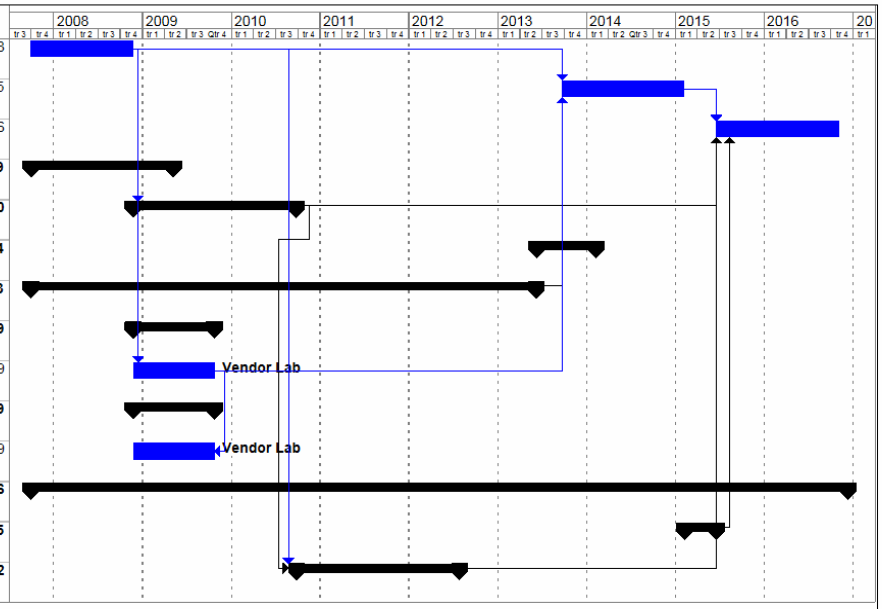

Project: Hydrogen RMon 4/9/07 Plan
HPS-01 Basic Data
Date: Mon 4/9/07

Task | Progress | Summary | External Tasks | Deadline
Split | Milestone | Project Summary | External Milestone

Page 1

Figure 16.4-5: R&D Schedule - Sulfuric Acid Concentrator and Sulfur Dioxide Absorbers

16.4.7 Electrolyzer R&D Plan

The scope and schedule of R&D activities supporting the development of HyS electrolyzers are shown in Figure 16.4-6. This scope and schedule meets the requirements of DDNs HPS-07-01 through HPS-07-06.

16.4.7.1 Scope

The R&D plan supporting the design of the Electrolyzer is arranged in five phases including six tasks. Each task is intended to address a DDN from HPS-07-01 through HPS-07-06.

Phase 1, Task 1, HPS-07-01, Catalyst Loading

One of the key economic drivers of the electrolysis cell is the electrode catalyst loading. Bench-scale optimization tests are required to optimize the amount of platinum catalyst used in the electrolyzers.

Phase 1, Task 2, HPS-07-02, Membrane Development

This task will include screening of various diaphragm and membrane materials. One of the key issues to be addressed is the leakage of sulfur species through the membrane.

Phase 2, HPS-07-03, Cell Development

This task will develop 2 or 3 competitive approaches to constructing a working cell (diaphragm, membrane, or gas diffusion electrode). At the end of this task, a technology selection will be made. This task will also include measurement of conductivity and diffusion coefficient data and preliminary screening of cell materials of construction.

Phase 3, HPS-07-04, Prototype Cell

This task will entail developing and demonstrating a 1/10 scale prototype element (approximately 0.1 – 0.2 m^2 active area per cell with 3 cells cascaded to generate 300 psi, i.e., capable of generating hydrogen pressure. This phase culminates in a demonstration of the working electrolyzer using appropriately sized hardware. The cell is expected to operate approximately 6 months to demonstrate materials of construction, operating efficiency and capacity. By the end of this phase the problem of sulfur species migrating to the cathode will have been solved. The prototype cell is intended to demonstrate corrosion resistance of the intended commercial materials of construction. Optimization of cell operating conditions begins during this phase.

Phase 4, HPS-07-05, Pilot Cell

The objective of this task will be to develop and demonstrate a single element electrolyzer at full scale (~ 3 m^2) active area as an expansion of that tested in the previous phase. Again the cell would be expected to be operated for a period of approximately 6 months demonstrating materials of construction, operating efficiencies, operation at pressure, and capacity. By the end of this phase the mechanical design of the individual cell will have been determined and the materials of construction selected. Further optimization of operating conditions including product hydrogen delivery conditions is carried out and the effect of cell area is taken into account.

Phase 5, HPS-07-06, Pilot Plant

This task will develop and demonstrate a 10 to 100 element pilot plant electrolyzer (approximately 30 to 300 m^2 active area) as an expansion of the Phase 4 pilot cell. It would be built for operation in an industrial environment at a sulfuric acid production facility or at the NGNP site to demonstrate the long term performance characteristics.

16.4.7.2 Schedule

As shown in Figure 16.4-6, if the Electrolyzer development schedule holds, construction of the full scale unit can begin at the NGNP plant site as early as 2015. This schedule also allows a generous amount of time for Phase 1 before hand-off from research to a development laboratory.

16.4.7.3 Manpower and Cost

The estimated costs of the R&D activities supporting the development of a sulfuric acid electrolyzer are shown in Table 16.4-7. Estimates are provided in labor man-years and the total labor and non-labor costs in 2007 dollars. An average labor rate of $146 /hour has been applied, which is judged to be representative of either a U.S. National Laboratory, a comparable facility, or a private development laboratory when considering a composite of technicians, engineers/ scientists and managers. The labor rate from task to task varies depending upon the proportion of professional to non-professional labor. An average of 2000 man-hours/man-year (MY) has been assumed for the development of MY estimates. These estimates are based on judgment and have significant uncertainties at this early stage of development. Note that rounding errors may cause the column totals to be slightly different than what is shown.

Table 16.4-7: Electrolyzer R&D Costs

Item	FY08	FY09	FY10	FY11	FY12	FY13	FY14	FY15	Total
Labor (MY)									
Optimize catalyst loading	2.2	2.2	0	0	0	0	0	0	4.4
Select a cell membrane material	2.2	2.2	0	0	0	0	0	0	4.4
Develop a cell configuration	0	1.2	4.6	1.2	0	0	0	0	6.9
Build and test a prototype cell	0	0	0	3.4	3.4	0	0	0	6.9
Build and test a pilot cell	0	0	0	0	2.0	4.0	0	0	6.1
Build and test a pilot electrolyzer	0	0	0	0	0	0	10.1	5.0	15.1
Total	4.4	5.6	4.6	4.6	5.5	4.0	10.1	5.0	43.8
Labor Cost (K$ @ $146/hr and 167h/MM)									
Optimize catalyst loading	700	700	0	0	0	0	0	0	1400
Select a cell membrane material	700	700	0	0	0	0	0	0	1400
Develop a cell configuration	0	385	1540	385	0	0	0	0	2310
Build and test a prototype cell	0	0	0	1090	1090	0	0	0	2180
Build and test a pilot cell	0	0	0	0	658	1316	0	0	1970
Build and test a pilot electrolyzer	0	0	0	0	0	0	3132	1566	4700
Subtotal	1400	1785	1540	1475	1748	1316	3132	1566	13960
Materials & Other (K$)									
Optimize catalyst loading	100	100	0	0	0	0	0	0	200
Select a cell membrane material	100	100	0	0	0	0	0	0	200
Develop a cell configuration	0	600	1300	100	0	0	0	0	2000
Build and test a prototype cell	0	0	0	1800	700	0	0	0	2500
Build and test a pilot cell	0	0	0	0	2000	1900	0	0	3900
Build and test a pilot electrolyzer	0	0	0	0	0	0	5000	1250	6250
Subtotal	200	800	1300	1900	2700	1900	5000	1250	15050
Total Cost (K$)									
Optimize catalyst loading	800	800	0	0	0	0	0	0	1600
Select a cell membrane material	800	800	0	0	0	0	0	0	1600
Develop a cell configuration	0	985	2840	485	0	0	0	0	4310
Build and test a prototype cell	0	0	0	2890	1790	0	0	0	4680
Build and test a pilot cell	0	0	0	0	2658	3216	0	0	5874
Build and test a pilot electrolyzer	0	0	0	0	0	0	8132	2816	10948
Total	1600	2585	2840	3375	4448	3216	8132	2816	29012

ID	Task Name	DDN	Duration	Start	Finish
1	Conceptual Design		15 mons	Mon 10/1/07	Fri 11/21/08
2	Preliminary Design		18 mons	Mon 9/23/13	Fri 2/6/15
3	Final Design		18 mons	Fri 6/19/15	Thu 11/3/16
4	**Basic Data**	**HPS-01**	**420 days**	**Mon 10/1/07**	**Fri 5/8/09**
8	**Supplementary Materials**	**HPS-02**	**480 days**	**Mon 11/24/08**	**Fri 9/24/10**
14	**Feed purification**	**HPS-03**	**175 days**	**Mon 6/10/13**	**Fri 2/7/14**
20	**Decomposer**	**HPS-04**	**1485 days**	**Mon 10/1/07**	**Fri 6/7/13**
29	**Sulfuric Acid Concentrator**	**HPS-05**	**240 days**	**Mon 11/24/08**	**Fri 10/23/09**
31	**SO2 Absorbers**	**HPS-06**	**240 days**	**Mon 11/24/08**	**Fri 10/23/09**
33	**Electrolyzer**	**HPS-07**	**2400 days**	**Mon 10/1/07**	**Fri 12/9/16**
34	Catalyst loading tests	HPS-07-01	24 mons	Mon 10/1/07	Fri 7/31/09
35	Cell membrane development	HPS-07-02	24 mons	Mon 10/1/07	Fri 7/31/09
36	Hand-off: research to development		0 days	Fri 7/31/09	Fri 7/31/09
37	Cell development	HPS-07-03	18 mons	Mon 8/3/09	Fri 12/17/10
38	Prototype cell	HPS-07-04	18 mons	Mon 12/20/10	Fri 5/4/12
39	Pilot Cell	HPS-07-05	18 mons	Mon 5/7/12	Fri 9/20/13
40	Pilot Plant	HPS-07-06	18 mons	Mon 9/23/13	Fri 2/6/15
41	Hand-off: development to vendor		0 days	Fri 2/6/15	Fri 2/6/15
42	Build full-scale demonstration at Idaho		24 mons	Mon 2/9/15	Fri 12/9/16
43	**Product Purification**	**HPS-08**	**94 days**	**Mon 2/9/15**	**Thu 6/18/15**
46	**Instrumentation and Controls**	**HPS-09**	**480 days**	**Mon 9/27/10**	**Fri 7/27/12**

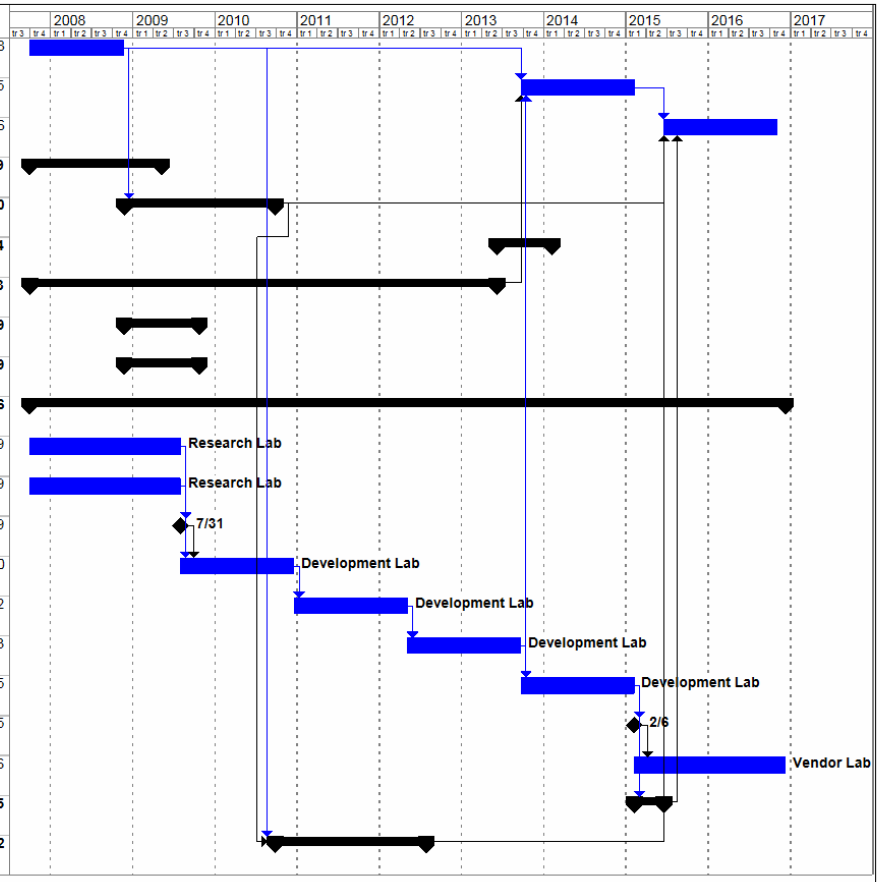

Project: Hydrogen RMon 4/9/07 Plan
HPS-01 Basic Data
Date: Mon 4/9/07

Task | Progress | Summary | External Tasks | Deadline
Split | Milestone | Project Summary | External Milestone

Page 1

Figure 16.4-6: R&D Schedule - Electrolyzer

16.4.8 Product Purification and Instrument and Controls R&D Plan

The scope and schedule of R&D activities supporting the process design of the Product Purification System (DDNs HPS-08-01 and HPS-08-02) and the development of valves and sensors for service in the harsh environments of the HyS process for the Instrumentation and Controls System (DDNs HPS-09-01 through HPS-09-03) are shown in Figure 16.4-7.

16.4.8.1 Scope

The scope of the R&D plan supporting the Product Purification DDNs includes analyzing products produced in the pilot plant and determining product impurities that would affect the salability of the product gases. It is expected that these impurities can be removed by commercially available means and provision is made for testing these means on samples of gases produced in the pilot plant. One exception to this is the removal of sulfur from product hydrogen to levels adequate for use in fuel cells. See Section 7.4.8 for further discussion.

The scope of the R&D plan supporting the Instrument and Controls DDNs includes testing sensors in the appropriate HyS environments and developing and testing valves in high-temperature sulfuric acid service. These activities anticipate that materials suitable for process sensors are commercially available for use in the environments in the HyS process in which sensors are necessary. Valve development, on the other hand, assumes that the activities included in the R&D plan for Supplementary Materials will succeed in developing suitable valve and sealing materials for environments requiring them.

16.4.8.2 Schedule

As can be seen in the schedule of Figure 16.4-7, Product Purification R&D is not expected to be on the critical path for this project unless product hydrogen is expected to be used for fuel cells and the migration of sulfur across the electrolyzer membrane cannot be prevented.

Sensor testing will almost certainly not be on the critical path. Valve development may be on the critical path depending upon the necessity of having valves operate reliably in the harshest HyS process environments. Further process design work in Conceptual Design is required to make that determination.

16.4.8.3 Manpower and Cost

The estimated costs of the R&D activities supporting Product Purification and Instrument and Controls DDNs are shown in Table 16.4-8. Estimates are provided in labor man-years and the total labor and non-labor costs in 2007 dollars. An average labor rate of $146/hour has been applied, which is judged to be representative of a U.S. National Laboratory or comparable facility when considering a composite of technicians, engineers/scientists and managers. The labor rate from task to task varies depending upon the proportion of professional to non-professional labor. An average of 2000 man-hours/man-year (MY) has been assumed for the development of MY estimates. These estimates are based on judgment and have significant

uncertainties at this early stage of development. Note that rounding errors may cause the column totals to be slightly different than what is shown.

Table 16.4-8: Product Purification and Instrument and Controls R&D Costs

Item	FY08	FY09	FY10	FY11	FY12	FY13	FY14	FY15	Total
Labor (MY)									
Identify product impurities	0	0	0	0	0	0	0	0.1	0.1
Test purification methods	0	0	0	0	0	0	0	0.4	0.4
Pilot sensors	0	0	0	0.4	0	0	0	0	0.4
Develop valves for HyS environments	0	0	0	2.5		0	0	0	2.5
Test valves in the pilot plant	0	0	0	0	0.4	0	0	0	0.4
Total	0	0	0	2.9	0.4	0	0	0.5	3.7
Labor Cost (K$ @ $146/hr and 167h/MM)									
Identify product impurities	0	0	0	0	0	0	0	22	22
Test purification methods	0	0	0	0	0	0	0	120	120
Pilot sensors	0	0	0	103	0	0	0	0	103
Develop valves for HyS environments	0	0	0	775	0	0	0	0	775
Test valves in the pilot plant	0	0	0	0	103	0	0	0	103
Subtotal	0	0	0	878	103	0	0	142	1122
Materials & Other (K$)									
Identify product impurities	0	0	0	0	0	0	0	0	0
Test purification methods	0	0	0	0	0	0	0	100	100
Pilot sensors	0	0	0	20	0	0	0	0	20
Develop valves for HyS environments	0	0	0	450	0	0	0	0	450
Test valves in the pilot plant	0	0	0	0	40	0	0	0	40
Subtotal	0	0	0	470	40	0	0	100	610
Total Cost (K$)									
Identify product impurities	0	0	0	0	0	0	0	22	22
Test purification methods	0	0	0	0	0	0	0	220	220
Pilot sensors	0	0	0	123	0	0	0	0	123
Develop valves for HyS environments	0	0	0	1225	0	0	0	0	1225

Item	FY08	FY09	FY10	FY11	FY12	FY13	FY14	FY15	Total
Test valves in the pilot plant	0	0	0	0	143	0	0	0	143
Total	0	0	0	1348	143	0	0	242	1732

ID	Task Name	DDN	Duration	Start	Finish
1	Conceptual Design		15 mons	Mon 10/1/07	Fri 11/21/08
2	Preliminary Design		18 mons	Mon 9/23/13	Fri 2/6/15
3	Final Design		18 mons	Fri 6/19/15	Thu 11/3/16
4	**Basic Data**	**HPS-01**	**420 days**	**Mon 10/1/07**	**Fri 5/8/09**
8	**Supplementary Materials**	**HPS-02**	**480 days**	**Mon 11/24/08**	**Fri 9/24/10**
14	**Feed purification**	**HPS-03**	**175 days**	**Mon 6/10/13**	**Fri 2/7/14**
20	**Decomposer**	**HPS-04**	**1485 days**	**Mon 10/1/07**	**Fri 6/7/13**
29	**Sulfuric Acid Concentrator**	**HPS-05**	**240 days**	**Mon 11/24/08**	**Fri 10/23/09**
31	**SO2 Absorbers**	**HPS-06**	**240 days**	**Mon 11/24/08**	**Fri 10/23/09**
33	**Electrolyzer**	**HPS-07**	**2400 days**	**Mon 10/1/07**	**Fri 12/9/16**
43	**Product Purification**	**HPS-08**	**94 days**	**Mon 2/9/15**	**Thu 6/18/15**
44	Identify impurities	HPS-08-01	14 days	Mon 2/9/15	Thu 2/26/15
45	Test purification methods	HPS-08-02	4 mons	Fri 2/27/15	Thu 6/18/15
46	**Instrumentation and Controls**	**HPS-09**	**480 days**	**Mon 9/27/10**	**Fri 7/27/12**
47	Sensor piloting	HPS-09-01	12 mons	Mon 9/27/10	Fri 8/26/11
48	Valve development	HPS-09-02	12 mons	Mon 9/27/10	Fri 8/26/11
49	Valve piloting	HPS-09-03	12 mons	Mon 8/29/11	Fri 7/27/12

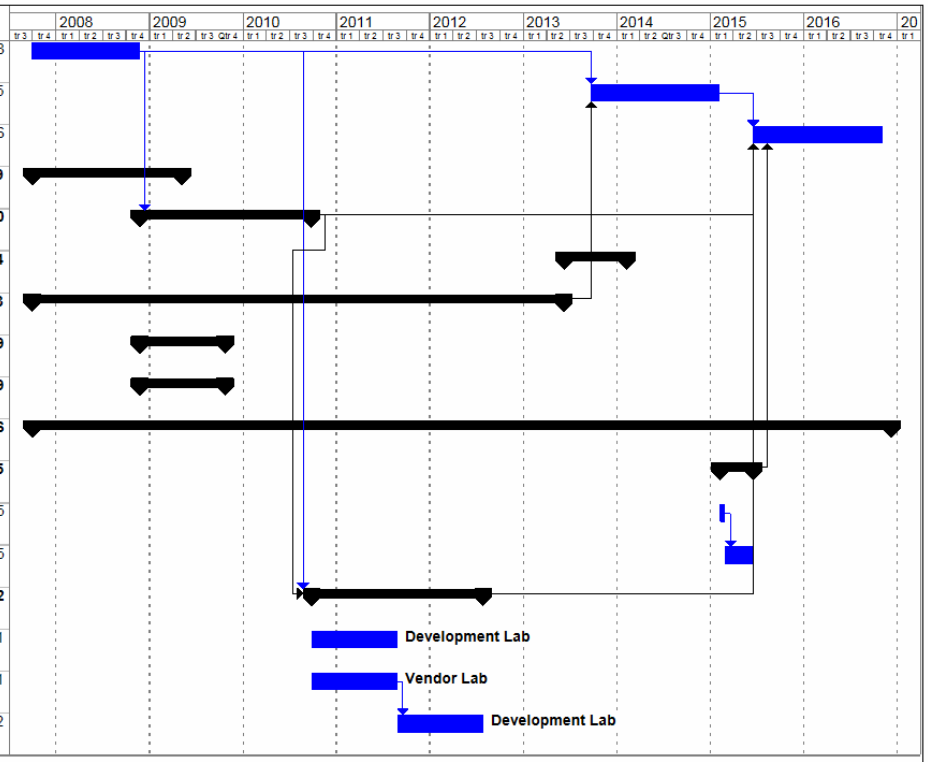

Project: Hydrogen RMon 4/9/07 Plan
HPS-01 Basic Data
Date: Mon 4/9/07

Task | Progress | Summary | External Tasks | Deadline
Split | Milestone | Project Summary | External Milestone

Page 1

Figure 16.4-7: R&D Schedule - Product Purification and Instrumentation and Controls

16.4.9 Summary R&D Cost and Schedule for Hydrogen Facility

The Hybrid Sulfur (HyS) process was selected as the hydrogen production process that had the best chance of early commercial deployment. However, the HyS technology offers significant research and development challenges. While the process has been demonstrated on a laboratory scale, converting the laboratory performance into a production plant requires significant R&D in the areas of basic thermo-reaction and kinetic data, plus component R&D, including the Decomposer and Electrolyzer, followed closely by the Sulfuric Acid Concentrator and SO_2 Absorber. The total technology development cost is $58 M which includes a pilot plant to test individual components, system dynamics and the effect of low levels of impurities on sensitive components. The scope of the R&D effort described herein is only a rough first estimate. With additional design, research, and study work, the scope may change in important ways. Development related to materials of construction appears at this point to be the most important source of risk.

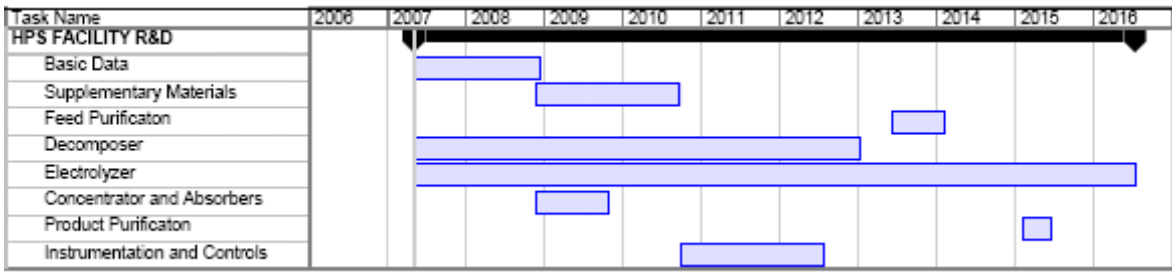

Hydrogen Facility	FY08	FY09	FY10	FY11	FY12	FY13	FY14	FY15	TOTAL
Basic Data	$1.0	$0.3							$1.3
Materials		$3.3	$2.7						$6.0
Feed Purification				$0.8					$0.8
Decomposer	$2.9	$3.0	$2.2	$2.1	$5.2	$3.1			$18.4
Concentrator and Absorber		$1.1							$1.1
Electrolyzer	$1.6	$2.6	$2.8	$3.4	$4.4	$3.2	$8.1	$2.8	$29.0
Product Purification + Sensing and Control				$1.3	$0.1			$0.2	$1.7
Subtotal	$5.5	$10.3	$7.8	$7.6	$9.7	$6.3	$8.1	$3.1	$58.4

Figure 16.4-8: Integrated R&D Schedule and Cost for Hydrogen Plant

16.5 POWER CONVERSION FACILITY

16.5.1 Design Data Needs for the Power Conversion Facility

Design Data Needs (DDNs) related to the Power Conversion Facility and, specifically, the Power Conversion System (PCS) are listed in Table 16.5-1. As can be seen from Table 16.5-1, DDNs have been identified in support of the Steam Generator of the PCS. These DDNs are presented in more detail in Section 8.3

The pre-conceptual design for the steam generator is clearly developmental from the perspective of being a new embodiment of a previously applied technology. The steam generator design is based on technology developed for early gas-cooled reactors such as Ft. Saint Vrain (FSV) and THTR. The steam generators for these plants operated successfully and the essential supporting technology in terms of materials, design methods and fabrication methods was demonstrated. Further design development of the design for MHTGR applications was accomplished under DOE sponsored programs in the 80's and early 90's [Ref 16.5-1]. This includes the compact helical arrangement of heat transfer surface and the once-through configuration. Tubing materials were based on conventional boiler materials (2-1/4 Cr -1Mo) for the lower temperature portions of the once-thru tube circuit and Alloy 800H for the higher temperature portion of the tube circuit.

For the NGNP application, the flow path of the helium is arranged so that the enclosing vessel operates at cold helium conditions. Internal structure materials (tube supports, shrouds) are selected consistent with operating temperatures. For the NGNP application (as with prior MHTGR applications), the steam generator is a scale-up in thermal rating relative to early experience. The impact of this scale-up is reflected in a previously recognized and documented (for example, Reference 16.5-1) set of Design Data Needs:

1. The enclosing vessel is designed and fabricated of low alloy steel and is generally within the current state-of-the-art of light water reactor and petrochemical vessel technology.
2. The overall size and weight of the completed steam generator is within the current technology basis.
3. The feedwater tubesheet penetration through the vessel requires special attention from a detailed design perspective and includes an orifice at the inlet of each tube circuit.
4. The superheated steam outlet tubesheet is an Alloy 800H forging of large size compared to typical practice with this material, which may lead to more than one shell penetration as detailed design proceeds.
5. The relatively large thermal rating compared to the operating base is typically accommodated by adding tube circuits. This introduces uncertainties in performance characteristics on both the helium and water sides of the tubes and the structural design of the tube bundle, as well as with fabrication and assembly techniques.

6. Other configuration-specific needs include consideration of wear protection of tube surfaces at support locations

In Table 16.5-1 the DDNs are categorized as follows:

- Materials - indicates that material related data is needed to support long term operation in the specified helium and secondary environments.
- Methods Development, Verification and Validation (MDV&V) - this grouping is further categorized as:
- Performance- indicates that configuration specific testing is needed to support final design.
- Design - configuration specific testing or mock-ups to support final design of the demonstration unit.
- Fabrication - configuration specific mock-ups to qualify techniques for prototype fabrication.

Table 16.5-1: Steam Generator Design Data Needs

DDN #	Data Need Described in Section 8.3	Category	Sub Category
PCS-01-01	Secondary side Corrosion Characteristics 800H & 2-1/4Cr-1Mo and Weldments	Materials	-
PCS-01-02	Helium Environment Effects on 2-1/4 Cr-1Mo	Materials	-
PCS-01-03	Helium Environment Effects on 800H	Materials	-
PCS-01-04	Acoustic Response of Helical Bundle	MDV&V	Performance
PCS-01-05	Large Helical Coil Fabrication Methods	MDV&V	Fabrication
PCS-01-06	Inlet Flow Distribution	MDV&V	Performance
PCS-01-07	Insulation Verification Test	MDV&V	Design
PCS-01-08	Fretting & Sliding Wear Protection Tests	MDV&V	Materials
PCS-01-09	Tube Wear Protection Device Testing	MDV&V	Design
PCS-01-10	Shroud Seal Test	MDV&V	Design
PCS-01-11	Lead-in/Lead-out/Transition/Expansion Loop Mockups	MDV&V	Fabrication
PCS-01-12	Flow Induced Vibration Testing of Helical Bundle	MDV&V	Performance
PCS-01-13	Orifice Qualification Test	MDV&V	Performance
PCS-01-14	Instrumentation Attachment Test	MDV&V	Design
PCS-01-15	Bi-Metallic Weld Structural Integrity	MDV&V	Design
PCS-01-16	Helical Bundle and Transition Region Heat Transfer Test	MDV&V	Performance
PCS-01-17	Tubing Inspection Methods and Equipment	MDV&V	Design
PCS-01-18	Review and Reassemble Existing SG Development Data Base	All	All

16.5.2 Steam Generator R&D Scope

The DDNs for the Steam Generator (SG) provide the essential inputs for the scope of R&D activities. Table 16.5-2 builds on Table 16.5-1 by adding major tasks relevant to satisfying each data need. DDN SG-01-18 logically should be addressed early and in parallel with conceptual design of the SG so that a sound basis for specific development tasks is available for performing individual task. Each task is assumed to have element of planning, technical aspects such as test model and test loop design, testing, data reporting and integration of results with ongoing SG design, fabrication and operation.

Table 16.5-2: Major R&D Tasks to Satisfy Data Needs

DDN #	Data Need Described in Section 8.3	Category	Sub Category	Major R&D Task to Satisfy Need
PCS-01-01	Secondary side Corrosion Characteristics 800H & 2-1/4Cr-1Mo and Weldments	Materials	-	Long term material testing in appropriate environment
PCS-01-02	Helium Environment Effects on 2-1/4 Cr-1Mo	Materials	-	Long term material testing in appropriate environment
PCS-01-03	Helium Environment Effects on 800H	Materials	-	Long term material testing in appropriate environment
PCS-01-04	Acoustic Loading (sound pressure spectra)	MDV&V	Performance & Design	Acoustic testing to establish configuration specific acoustic fields inside steam generator
PCS-01-05	Large Helical Coil Fabrication Methods	MDV&V	Fabrication	Perform mockup test of full scale coils and support structure
PCS-01-06	Inlet Flow Distribution	MDV&V	Performance	Perform full scale geometry airflow test of inlet region of tube bundle
PCS-01-07	Mechanical Performance of Insulation Components	MDV&V	Design	Perform mockup tests to validate selected configuration
PCS-01-08	Fretting & Sliding Wear Protection Characteristics of Tube Protection Devices	MDV&V	Design	Perform testing to show selected conservative relative to existing wear and wear rate data base.
PCS-01-09	Confirmation of Tube Wear Protection Device Design	MDV&V	Design	Perform mockup testing to demonstrate functional and fabrication aspects of selected design
PCS-01-10	Develop Shroud Seal Design	MDV&V	Design	Perform mockup testing to demonstrate feasibility and functional performance of selected design
PCS-01-11	Confirm mechanical design of Lead-in/Lead-out/Transition/Expansion	MDV&V	Fabrication	Perform 3-D Modeling and Partial Physical Mock-ups of Selected Arrangement

DDN #	Data Need Described in Section 8.3	Category	Sub Category	Major R&D Task to Satisfy Need
	Loop			
PCS-01-12	Flow Induced Vibration Characteristics of Helical Bundle	MDV&V	Performance	Gather vibration data from instrument tubes in the airflow test program (see SG-6)
PCS-01-13	Orifice Qualification Data	MDV&V	Performance	Perform orifice testing to establish pressure drop characteristics of selected design.
PCS-01-14	Instrumentation Attachment Methods Validation	MDV&V	Design	Perform mockup tests to demonstrate attachment and assembly feature of SG instrumentation
PCS-01-15	Confirm Bi-Metallic Weld Structural Integrity	MDV&V	Design	Perform tests to confirm acceptable envelop of high temperature operation.
PCS-01-16	Helical Bundle and Transition Region Heat Transfer Characteristics	MDV&V	Performance	Perform tests in air with prototypic geometry to provide heat transfer and friction characteristics.
PCS-01-17	Confirm inspection capability for steam generator	MDV&V	Design	Perform mockup demonstration delivery and data gathering for steam generator tubes
PCS-01-18	Assure incorporation of existing SG data base in NGNP design process	All	All	Review and Reassemble Existing SG Development Data Base

16.5.3 Cost and Schedule Summary

Costs to support the satisfaction of DDNs of the steam generator are summarized in Table 16.5-3. These costs were updated (increased) to account for escalation and uncertainties from the basis developed during the MHTGR program. Uncertainties include pre-conceptual design status and unknowns regarding performing organization for the various tasks and planning details for the various tasks.

Overall schedule relationships are shown in Figure 16.5-1. This schedule provides a framework for developing a detailed plan.

Table 16.5-3: Steam Generator DDN Cost Summary

DDN	Item	Category	FY08	FY09	FY10	FY11	FY12	FY13	Total
PCS-01-01	Secondary side Corrosion Characteristics 800H & 2-1/4Cr-1Mo	Materials	0	97	1874	2602	663	0	5236
PCS-01-02	Helium Environment Effects 2-1/4 Cr-1Mo	Materials							TBD*
PCS-01-03	Helium Environment Effects 800H	Materials							TBD*
PCS-01-04	Acoustic Response of Helical Bundle	MDV&V	0	0	78	874	78	0	1030
PCS-01-05	Large Helical Coil Fabrication Test	MDV&V	0	0	565	686	0	0	1251
PCS-01-06	Inlet Flow Distribution	MDV&V	0	2477	552	618	0	0	3647
PCS-01-07	Insulation Verification Test	MDV&V	0	64	390	0	0	0	454
PCS-01-08	Fretting & Sliding Wear Protection Tests	MDV&V	0	813	998	0	0	0	1811
PCS-01-09	Tube Wear Protection Device Testing	MDV&V	0	159	443	218	296	0	1117
PCS-01-10	Shroud Seal Test	MDV&V	0	128	42	64	396	0	630
PCS-01-11	Lead-in/Lead-out/ Transition/Expansion Loop Mockups	MDV&V	0	0	0	392	328	0	719
PCS-01-12	Flow-Induced Vibration Testing	MDV&V			744	824	429		
PCS-01-13	Orifice Qualification Test	MDV&V	0	0	632	0	0	0	632
PCS-01-14	Instrumentation Attachment Test	MDV&V	0	0	0	156	156	0	312
PCS-01-15	Bi-Metallic Weld Structural Integrity	MDV&V	0	0	312	468	468	0	1248
PCS-01-16	Helical Bundle and Transition Region Heat Transfer Test	MDV&V	0	0	315	527	0	0	842
PCS-01-17	Tubing Inspection Methods and Equipment	MDV&V	0	354	328	312	0	0	994
PCS-01-18	Review and Reassemble Existing SG Development Data Base	All	624	0	0	0	0	0	624
All	Total SG Development		624	4092	7274	7741	2814	0	22544

* These needs are assumed to be satisfied by NHSS material data programs

ID	Task Name	DCN	Duration	Start
1	Secondary side Corrosion Characteristics 800H & 2-1/4Cr-1Mo and Weldments	PCS-01-01	1044 days	Wed 10/1/08
2	Helium Environment Effects on 2-1/4 Cr-1Mo	PCS-01-02	24 days	Mon 10/1/07
3	Helium Environment Effects on 800H	PCS-01-03	1 day	Mon 10/1/07
4	Acoustic Response of Helical Bundle	PCS-01-04	665 days	Mon 9/28/09
5	Large Helical Coil Fab Test	PCS-01-05	523 days	Thu 10/1/09
6	Inlet Flow Distribution	PCS-01-06	739 days	Wed 10/1/08
7	Insulation Verification Test	PCS-01-07	523 days	Wed 10/1/08
8	Fretting & Sliding Wear Protection Tests	PCS-01-08	523 days	Wed 10/1/08
9	Tube Wear Protection Device Testing	PCS-01-09	978 days	Wed 10/1/08
10	Shroud Seal Test	PCS-01-10	913 days	Wed 10/1/08
11	Lead-in/Lead-out/Transition/Expansion Loop Mockups	PCS-01-11	523 days	Fri 10/1/10
12	Flow Induced Vibration Testing of Helical Bundle	PCS-01-12	600 days	Thu 10/1/09
13	Orifice Qualification Test	PCS-01-13	652 days	Thu 10/1/09
14	Instrumentation Attachment Test	PCS-01-14	400 days	Fri 10/1/10
15	Bi-Metallic Weld Structural Integrity	PCS-01-15	782 days	Thu 10/1/09
16	Helical Bundle and Transition Region Heat Transfer Test	PCS-01-16	522 days	Thu 10/1/09
17	Tubing Inspection Methods and Equipment	PCS-01-17	783 days	Wed 10/1/08
18	Review and Reassemble Existing SG Development Data Base	PCS-01-18	262 days	Mon 10/1/07

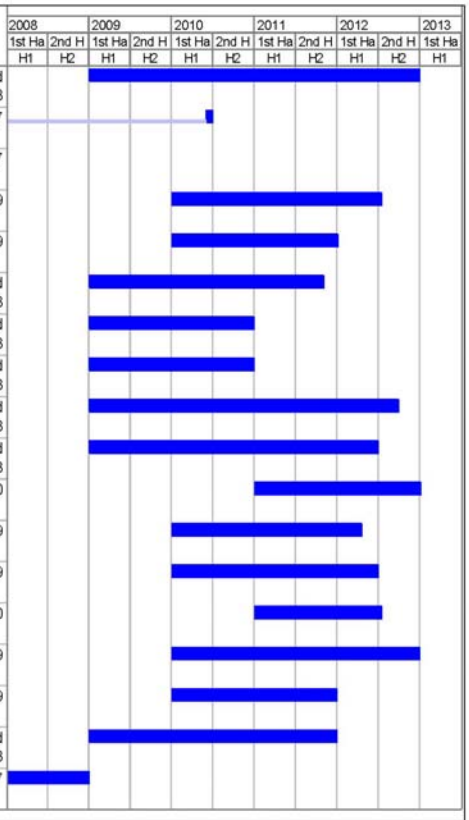

Page 1

Figure 16.5-1: Steam Generator Development R&D Schedule

16.5.4 Summary Technology Development Cost and Schedule for Power Conversion Facility

The power conversion cycle chosen for the NGNP is a Rankine cycle, requiring a steam generator. While helium-to-steam generators have been previously built, the NGNP steam generator requires incremental development, due to its larger size and the increased helium temperatures that would be present under some operating conditions. Since the steam generators are long lead time procurement components, the technology development program on key elements needs to be started in no later than FY 2009. Significant prototype testing is also included in the technology development plans. The total cost of the steam generator technology development is $22.5 M and will take 5 years to complete. Since the steam generators are long lead time procurement components, the technology development program on key elements needs

to be started no later than in FY 2009, with planning efforts beginning in FY 2008. The total cost of the steam generator R&D is $ 22.5 M and will take 5 years to complete

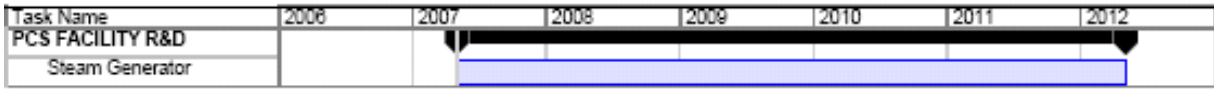

Power Conversion Facility	FY08	FY09	FY10	FY11	FY12	TOTAL
Steam Generator R&D	$0.6	$4.1	$7.3	$7.7	$2.8	**$22.5**

Figure 16.5-2: Integrated Schedule and Cost for the Power Conversion System

16.6 PLANT LEVEL

Plant-Level R&D comprises activities that are cross functional in terms of the overall plant covering the reactor, heat transport system, electric plant and hydrogen plant.

16.6.1 Design Development Needs

Expected DDNs include and integrated safety analysis and verification and validation of computer codes for the integrated systems. No high-priority enabling DDNs incremental to the requirements of the PBMR DPP have been identified in this area as a result of preconceptual design. There is a potential that DDNs will be identified during the Conceptual Design Phase.

16.6.2 Technology Development Plans

Consistent with Section 16.6.1, no technology development plans have resulted in the Plant Level category.

16.7 REGULATORY RESEARCH PLAN

This area has been reserved for the definition of technology development in response to future DDNs related to nuclear regulatory research requirements. DDNs arising from such requirements may evolve as part of the PBMR Preapplication Design Certification Program, or as a result of NGNP-specific licensing activities.

16.8 INTEGRATED TECHNOLOGY DEVELOPMENT PLAN - COST & SCHEDULE

The integrated Technology Development plan is summarized in this section from the perspective of cost and schedule on a top level basis. This summary is intended to provide an overall perspective of the key R&D elements and a basis for further resource planning.

16.8.1 Costs

The costs for the integrated NGNP Technology Development Plan are summarized in Table 16.8-1 on a fiscal year basis. The key to meeting the 2018 operational date for the NGNP is early start of priority technology development areas that are primarily concentrated in the period leading up to completion of Final Design in 2012. Longer term development efforts continue through 2017 in support of plant startup.

Table 16.8-1: Integrated NGNP R&D Cost by Year

	FY2008	FY2009	FY2010	FY2011	FY2012	FY2013	FY2014	FY2015	FY2016	FY2017	TOTAL
Nuclear Heat Supply System											
Fuel	0.5	4.5	6.5	6.5	6.5	5.5	3.5	3.5	3.5	4.5	45.0
Reflector Graphite	0.5	0.6	0.8	0.8	0.7	0.9	0.7				5.0
Subtotal	1.0	5.1	7.3	7.3	7.2	6.4	4.2	3.5	3.5	4.5	50.0
Heat Transport System											
Metallic IHX	3.9	6.9	6.0	2.0	0.3						19.0
Ceramic IHX	3.6	6.6	5.2	4.5	4.3	4.3	0.6	0.6			29.6
HTS Other	0.4	1.1	0.8	1.1	1.1						4.5
Subtotal	7.8	14.6	11.9	7.6	5.7	4.3	0.6	0.6			53.1
Hydrogen Facility											
Basic Data	1.0	0.3									1.3
Materials		3.3	2.7								6.0
Feed Purification				0.8							0.8
Decomposer	2.9	3.0	2.2	2.1	5.2	3.1					18.4
Concentrator and Absorber		1.1									1.1
Electrolyzer	1.6	2.6	2.8	3.4	4.4	3.2	8.1	2.8			29.0
Product Purification + Sensing and Control				1.3	0.14			0.2			1.7
Subtotal	5.5	10.3	7.8	7.6	9.7	6.3	8.1	3.1			58.4
Power Conversion Facility											
Steam Generator R&D	0.6	4.1	7.3	7.7	2.8						22.5
Total Technology Development	**14.9**	**34.1**	**34.3**	**30.2**	**25.5**	**16.9**	**13.0**	**7.2**	**3.5**	**4.5**	**184.0**

16.8.2 Schedule

The integrated Technology Development schedule for the pebble bed NGNP is shown in Figure 16.8-2. As can be seen, much of the needed research and development will be completed by 2012 in support of Final Design and long-lead procurement, which occurs at the start of construction.

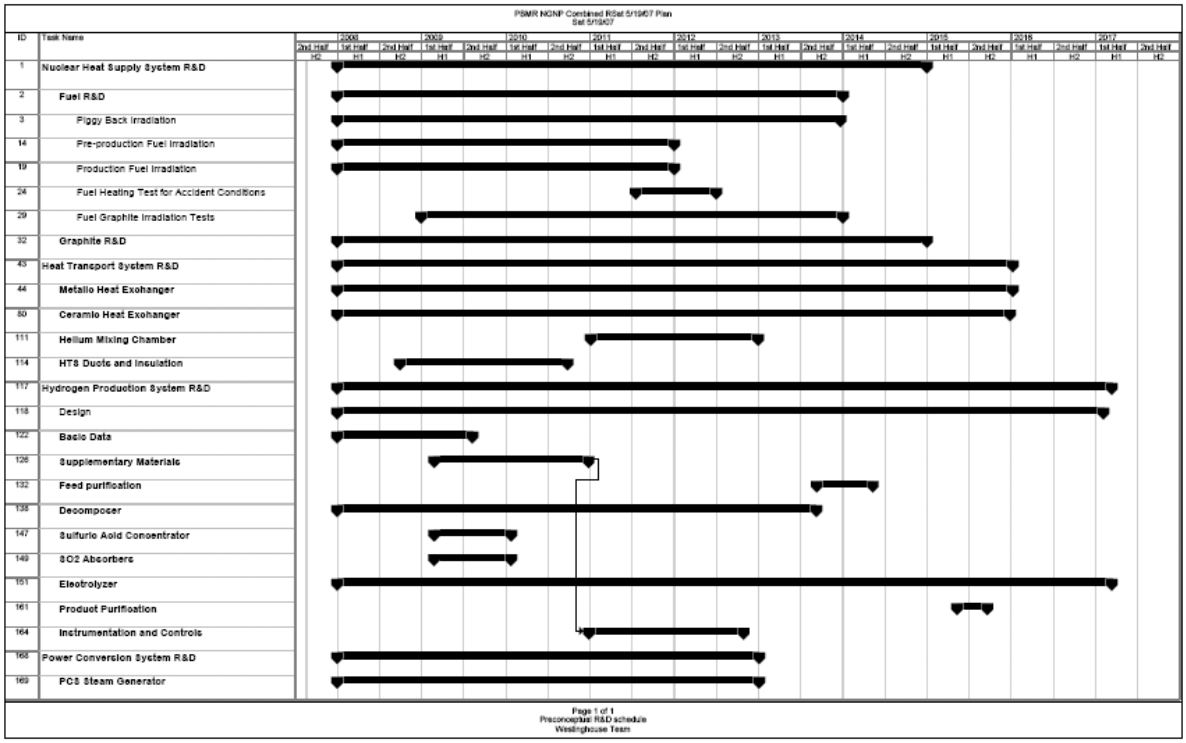

Figure 16.8-1: Integrated NGNP R&D Schedule

16.9 ENHANCING R&D SCOPE

Although not specifically scoped, scheduled or estimated within this NGNP Technology Development Plan, enhanced Research and Development opportunities were identified that would be useful for long term research to enhance the performance and/or further reduce the cost and risk associated with the NGNP. Those identified include:

1. Advanced Fuel Development
2. Advanced Fuel Manufacturing
3. Advanced Fuel cycle investigations
4. Design code verification & validation
5. Fundamental Properties of Nuclear Graphite
6. High Temperature Heat Transport via Liquid Salt

16.9.1 Advanced Fuel Development

Advanced fuel programs will be fostered by early integration with commercial fuel manufacturers. Such enhanced fuels would be fully developed for qualification in the NGNP. Leading examples include ZrC coated or doped coatings and the use of higher enrichments – up to 19%. Another example is the UCO TRISO-coated fuel which would be used for increasing operating temperature regimes within NGNP. There may also be initiatives for the testing of transmutation fuels containing transuranics such as plutonium, neptunium, and americium. Nuclear Fuel Services, Inc. (NFS) would provide the fuel development program through the Advanced Fuel Development Facility (AFDF). This facility would be fully licensed and equipped to handle a variety of enriched uranium fuels. Timely development and continuous improvement of advanced fuels will ensure that NGNP can be operated at increasing efficiencies for the lowest possible fuel cost. The application of PBMR's Advance Coater Facility, an operating full-scale coating prototype, will produce design information and reduce uncertainties associated with coating process scale-up for improved current generation fuel and future advanced fuel types. Ongoing development work should incorporate to the extent possible, mixed uranium fuels for potential NGNP or other AGR implementation.

16.9.2 Advanced Fuel Manufacturing

Advanced fuel process development, e.g. more continuous processing and automation, will lead to improved yields and lower unit costs as well as adapt enhancements needed for the advanced fuel designs. This facility would not only encompass process improvements from the prior generation of fuel plants, but would also have the capability to manufacture more advanced fuel (e.g. UCO) for improving both electrical and hydrogen generation. The Westinghouse Team would provide the advanced fuel manufacturing capability. NFS would manufacture the commercial fuel under a licensing agreement with Westinghouse and PBMR. While uranium fuels would be the initial focus, separate lines could be envisioned for future implementation for manufacturing quantities of mixed uranium fuels.

16.9.3 Advanced Fuel Cycle Investigations

Deep Burning

This enhancing technology would address the pressing issue of deep burning (transmutation) of nuclear waste (plutonium and minor actinides) in a pebble bed reactor. It would investigate the unique ability of pebble bed reactors to burn pure reactor grade plutonium (Rx-Pu) to very deep levels. The use of pure Rx-Pu means that no additional materials are added to contribute to the build-up of associated fission products or actinides. It also means that an effective, economic means is provided to utilize the build-up of Pu stockpiles worldwide which has become a source of major political concern.

Thorium Fuel Cycle

Three times more thorium exists in the crust of the earth than uranium. It is only when one considers the various aspects of neutron physics, economy, technical feasibility, resource depletion, and proliferation resistance together with the flexibility offered by the pebble bed reactor technology that the real advantages are understood. Pebble bed reactors offer the unique flexibility of charging the fuel spheres with a number of coated particles as needed, charging different types of fuel spheres according to a predetermined mixture, and charging or discharging of fuel at rates that would enhance optimal performance.

Due to the resurgence of interest in thorium fuel cycles it is proposed that a thorough techno-economic assessment is performed with the pebble bed reactor. It is suggested that a few closed thorium fuel cycles be investigated in comparison to one another to provide a comparative overview of the characteristics aiding the decision making process in opting for the potentially most promising advanced fuel cycle. Throughout the reactor life the various phases are to be simulated, such as starting up the reactor, run-in, a short term once through phase to allow termination of the out-of-pile delay time of initial discharged batches, transition to recirculation of the fuel subject to available quantities of reprocessed fuel, and subsequently the continuous adjustment of fuel supply to compensate for the buildup of U-234 and U-236. Technological constraints should be observed in all the phases. Margins on the fuel cycle costs should be flexible enough to allow for optimization of the main considerations of the various fuel cycles.

16.9.4 Design and Evaluation Model Verification and Validation

In order to analyze various aspects of the integrated NGNP, the software currently used for the PBMR–DPP design will be enhanced and extended to have an integrated core neutronic/thermal hydraulic analysis tool coupled to the Power Conversion and Hydrogen Production Systems models for simulating normal and off-design conditions. This tool will allow for steady-state and transient analyses of the integrated NGNP plant and will enable operational and control studies.

Various verification and validation activities are required to ensure that this tool provide accurate results. Aspects that will require V&V are:

1. The input data used for these models and calculations will also need to be verified to ensure accurate results. Examples of data required are state of the art cross section data that will reduce uncertainty and calculation margins as well as input data for the Hydrogen Production System and heat transfer correlations used in the evaluation models.

2. Calculation model verification and validation for various phenomena and performance conditions.

Specific aspects that need to be addressed in HTR cores are:

1. Non-local heat generation in HTR cores - An issue that is contributing to uncertainties in the coupled neutronics and thermal-hydraulics of pebble bed reactors design is the treatment of the so-called non-local heat generation contributors. These include:
    a. Heat generation due to γ-radiation and neutron moderation;
    b. Heat redistribution in the reflector regions due to the bypass flows;
    c. Non-local γ-power in the reflector during a depressurized loss of coolant (DLOFC) event.

2. Cold critical experiment – Design techniques and methodologies implemented in the design codes need to be validated. A cold critical experiment will provide the opportunity to measure many parameters that are calculated.

3. Dust modeling and associated impact on plant performance and safety also need to be addressed.

16.9.5 Fundamental Properties of Nuclear Graphite

The properties of nuclear-grade graphite, and the changes in those properties as a function of temperature and fluence, are known to vary, depending upon the source of raw materials and the specific details of the processing steps used in its manufacture.

The graphite R&D program proposed for the PBMR NGNP (Section 16.3) comprises the minimum incremental enabling technology requirements relative to the PBMR DPP. However, a more fundamental understanding of graphite properties as a function of raw material sources and processing would be highly desirable in the context of an expanding commercial market for High-Temperature Gas Cooled Reactors (HTGRs). Through such improved understanding, the need for expensive and time-consuming graphite qualification programs based on irradiation capsules might be avoided or at least reduced in scope. Further, a more fundamental

understanding of graphite properties might provide the basis for enhancing the life span of reflector graphite.

The expanded graphite development program, outlined by INL [Ref 16-4], appears to provide the initial steps toward such an improved fundamental understanding. As already noted in Section 16.2, there is a significant potential for collaboration between INL/NGNP in the PBMR in this area, and steps are underway to affect such collaboration.

16.9.6 High Temperature Heat Transport via Liquid Salt

Helium has been selected as the secondary heat transport fluid for the PBMR NGNP on the basis of available technology, the demanding NGNP schedule and the short coupling distance that is possible by separating the H_2SO_4 decomposition section from the hydrogen production section in the HyS process. For other applications, such as High Temperatures Steam Electrolysis (HTSE) and the Sulfur-Iodide (S-I) thermo-chemical water splitting process, longer distance separation of the hydrogen production process steps may not be practical. In such applications, short SHTS coupling distances may pose incremental licensing challenges. Additionally, there are other applications (e.g., energy parks) in which longer heat transport distances may be necessary or desirable.

If such applications, liquid salt heat transport offers theoretical advantages in terms of the size and cost of heat transport components. This is due to the much higher effective volumetric heat capacity of liquid salt versus helium. However, these theoretical advantages are offset by very significant technical challenges, especially when considered for the secondary loop of a nuclear facility.

With the PBMR NGNP design, there exists a potential for demonstrating high temperature heat transport in a tertiary loop architecture. This would be done by replacing the process coupling heat exchanger (in this case the sulfuric acid decomposer) with a helium-to-liquid salt heat exchanger, a suitable tertiary piping system and liquid salt PCHX. Note that, in the PBMR NGNP preconceptual design, the temperature exiting the PCHX (659ºC) is compatible with leading liquid salt heat transfer media [Ref. 16-5].

REFERENCES

(Used for Background in Technology Development)

[16-1] Kesseli, J.B., et. al., Conceptual Design for a High-temperature Gas Loop Test Facility, INL/EXT-06-11648, August 2006.

[16-2] Hayner, G.O., Bratton R.L., Mizia R.E. and Windes W.E., Next Generation Nuclear Plant Materials Research and Development Plan, Revision 3, INL/EXT-06-11701, Idaho National Laboratory, Idaho Falls, ID, August 2006.

[16-3] Steam Generator Technical Development Status Report, CEGA-002781, 1993.

[16-4] Bratton, R., *NGNP Graphite Qualification Program*, NGNP Materials Workshop, Salt Lake City, Utah, June 21-22, 2006.

[16-5] Williams, D. F., Assessment of Candidate Molten Salt Coolants for the NGNP/NHI Heat-Transfer Loop, ORNL/TM-2006/69, ORNL, Oak Ridge, TN.

LIST OF ASSUMPTIONS

None

APPENDICES

APPENDIX 16A BIBLIOGRAPHY

Listed below are sources that have been collected and consulted during the preparation of the Technology Development plans.

[16-1] Gen IV Nuclear Energy Systems Ten Yr Program Plan Fiscal Year 2005 Vol 1, March 2005, Department of Energy.

[16-2] Nuclear Hydrogen R&D Plan Appendices-Final Draft, March 2004, Department of Energy.

[16-3] Nuclear Hydrogen R&D Plan, March 2004, Department of Energy.

[16-4] Design Features & Technology Uncertainties for the NGNP, Independent Technology Review Group, June 30, 2004, INEEL/EXT -04-018816.

[16-5] Preliminary Assessment of Existing Experimental Data for Validation of Reactor Physics Codes and Data for NGNP Design and Analysis, Taiwo, Park, Khalil, Idaho National Laboratory and Argonne National Laboratory, September 15, 2004.

[16-6] NRC's Advanced Reactor Research Program, SECY-03-0059, April 18, 2003.

[16-7] Future Licensing & Inspection Readiness Assessment, Nuclear Regulatory Commission, September 2001

[16-8] Next Generation Nuclear Plant-Design Methods Development & Validation Research & Development Program Plan, INEEL/EXT 04-02293, September 2004.

[16-9] Key Differences in the Fabrication, Irradiation, & Safety Testing of U.S. & German TRISO-coated Particle Fuel & Their Implications on Fuel Performance, INEEL/EXT-02-00300, Petti, Maki, Buongiorno, Miller, June 2002.

[16-10] Very High Temperature Reactor System Hydrogen Production Project Draft Rev 4, Sulfur Iodine Process, GIF/VHTR Hydrogen Production, Tech Sec/ October 19, 2006.

[16-11] Very High Temperature Reactor System Hydrogen Production Project Draft Rev 4,H2 Process Coupling Collaboration Plan, GIF/VHTR Hydrogen Production, Tech Sec/, October 25, 2006.

[16-12] Very High Temperature Reactor System Hydrogen Production Project Draft Rev 4, Hydrogen Production WP2 HTE, GIF/VHTR Hydrogen Production, Tech Sec/, November 24, 2006

[16-13] Tsanos, C. Analysis of the Applicability of the ANL NSTF Facility for the Simulation of the NGNP RCCS, Thermal Hydraulics: Computational Fluid Dynamics and Heat Transfer, p. 685. Argonne National Laboratory.

[16-14] Scaling Studies and Conceptual Experiment Designs for NGNP CFD Assessment, McEligot, McCreery, INEEL/EXT-04-02502, November 30, 2004.

[16-15] Development Plan for Advanced High Temperature Coated Particle Fuels, General Atomics, PC0 000513, Rev 0, 2003

[16-16] Effect of Use of Zirconium Carbide Coatings on the VHTR Core Nuclear Design, General Atomics, PC-000514, Rev 0, December 19, 2003.

[16-17] Development of an Experiment for Measuring Flow Phenomena Occurring in a Lower Plenum for VHTR CFD Assessment, Conde, McCreery, Mcllory, McEligot, INL/EXT-05-00603, September 21 2005.
[16-18] Flow Regimes in an Idealized Plenum Model, Smith, B.L., Utah State University, August 10, 2005, DOE contract: DE-AC07-05ID14517.
[16-19] The U.S. Gen IV Implementation Strategy, Department of Energy, September 2003.
[16-20] VHTR H2 Production Project Draft Collaboration Plan on Sulfur Iodine Process and Evaluation, GIF/VHTR/Hydrogen Production, Tech Sec/February 16, 2006.
[16-21] Collaboration Plan for Graphite Technology Development Area Rev 0, GIF.
[16-22] Evaluation of High Temperature Gas-Cooled Reactor Physics Experiments as VHTR Benchmark Problems, Taiwo, Kim, Yang, Khalil, ANL-GenIV-059, September 15, 2005.
[16-23] Evaluation of the Initial Critical Configuration of the HTR-10 Pebble Bed Reactor, Terry, W, INL, HTR-10-GCR-RESR-001, CRIT.
[16-24] Materials Development Program, Appendix 9, Generation IV Roadmap, DOE, 2002.
[16-25] NGNP Methods Technical Program Plan, Idaho National Laboratory, INL/EXT-06-11804, September 2006.
[16-26] Reactor Physics Parametric and Depletion Studies in Support of TRISO Particle Fuel Specification for the NGNP, Sterbentz, Phillips, Sant, Chang, Bayless, INEEL/EXT-04-02331, September 2004.
[16-27] NGNP Appendix 1.0, Research and Development Plan, DOE Generation IV Roadmap, 2002.
[16-28] GEN IV System Research Plan for the VHTR Rev 0, Generation International Forum, May 2006.
[16-29] Screening Tests for Selection of VHTR Advanced Fuel, General Atomics, PC-000510 Rev 0, December 10, 2003.
[16-30] Updated GEN IV Integrated Materials Technology Program Plan Rev 2, Corwin et al, Oak Ridge National Laboratory, ORNL/TM-2003/244/R2, December 31, 2005.
[16-31] Initial VHR Accident Scenario Screening Classification: Models and Data – Statu Report, Vilim, Feldman, Pointer, Wei, Argonne National Laboratory, September 2004.
[16-32] NGNP High Level Functions & Requirements, INEEL/EXT-03-01163, Idaho National Laboratory, September 2003.
[16-33] NGNP R&D Program Plan, Idaho National Laboratory, Oak Ridge National Laboratory, Argonne National Laboratory, December 2004.
[16-34] "NGNP Technical Issues Safety Research Needs" - Rubin, S, Nuclear Regulatory Commission presentation, June 7, 2006.
[16-35] GEN IV Nuclear Energy Systems - System Research Plan for the VHTR Rev 0, July 2006.
[16-36] NGNP Preliminary Project Management Plan, INL/EXT-05-00952 Rev. 1, March 2006.
[16-37] "NGNP Project Review Transition Briefing", MacDonald, Petti, Idaho National Laboratory, Presentation, January 6, 2005.
[16-38] NGNP Materials R&D Program Plan, INL/EXT-06-11701 Rev. 3, August 2006.
[16-39] HYTHEC Presentation Hythec Extremat 1st Technical Meeting, December 5, 2006, CEA-Saclay, Presentation.

[16-40] "High Temperature Metallic Materials Selection", Kriel, W. PMBR, Presentation, Pre-Application meeting with NRC. September 21-22, 2005.

[16-41] "Carbon Based and Ceramic High Temperature Materials in the PBMR Core Structures", Kriel, W. PMBR, Presentation, Pre-Application meeting with NRC. September 21-22, 2005.

[16-42] "Computer Code, Data, and Evaluation Model (EM) Verification & Validation (V&V)", Kling, C., Presentation to NRC, August 22, 2005.

[16-43] "Main Raphael Achievements of First One and a Half Year", RAPHAEL Steering Committee Meeting no. 3, Presentation, November 16, 2006.

[16-44] "Integrated PBMR PHP Process Plant", Technology Insights Prepared for PMBR, 2006.

[16-45] China Near Term HTR R&D Plan, Private communication, Sun, Y. Institute of Nuclear Energy Technology, Tsinghua University, 2007.

[16-46] Advanced Reactor Research Infrastructure Assessment – Revision 3, Attachment, Nuclear Regulatory Commission, January 2003.

[16-47] "Key Issues Affecting High Temperature Gas Reactors", Merschoff, E., International Atomic Energy Agency, Division of Nuclear Reactor Safety, Technical Report CGE-2005-01, Rev.2, May 4, 2006.

[16-48] Slides GT-MHR Fuel Plan, May 21 2002, General Atomics, Advanced Fuel Development and Qualification Meeting.

APPENDIX 16B FINAL DESIGN REVIEW PRESENTATION TO BEA

Section 16
Technology Development

Andrew C. Kadak

Preconceptual Design Report
90% Design Review

May 8-10, 2007

P B M R

Westinghouse NGNP Team

Technology Development Plans Cost and Schedule

- Outline:
  - Overall Approach
  - Technology Development Plans, Cost and Schedule
    - Nuclear Heat Supply System
    - Heat Transport Facility
    - Hydrogen Facility
    - Power Conversion Facility
  - Integrated Schedule
  - Estimated Costs
    - Total
    - Annual expenditures

Overall Approach

- Each Engineer in the facility area identifies ***Enabling*** Design Data Needs
  - Recognition of current state of the art
  - Recognition of current research ongoing or planned by ***PBMR*** and others
- Design Data Needs converted into Technology Development plans, cost and schedule in consultation with experts in the field for each facility.
- ***Enhancing*** Technology Development opportunities identified for future research

Ongoing PBMR Research and Development

- Extensive Fuel Qualification work for UO_2 using German data base and new experiments ongoing.
- Graphite irradiations proposed as part of international program
- Materials for high temperature helium environments
- First of a Kind Component R&D
- Extensive test facilities built and planned in South Africa plus others:
  - Heat Transfer Test Facility
  - Helium Test Facility
  - Experimental Plate Out Test Facility
  - ASTRA
  - NACOK
  - SANA
- Extensive Analytical and Verification work on:
  - Neutronics Design Tools
  - Control System Design
  - First of a Kind Engineering
  - Engineering Design Tools
  - Safety Analyses
  - Balance of Plant Design Tools

P B M R

Nuclear Heat Supply System Technology Development Needs

- **Fuel Qualification**
  - Fuel irradiation for normal operating conditions
    - To address higher peak fuel temperature (1300ºC) and higher fluence for normal operating conditions
    - 12 fuel spheres will be irradiated at temperature and burnup
    - PIE performed
  - Fuel heating tests for accident conditions
    - Post irradiation heating up to 1800ºC of 11 fuel spheres
    - Followed by PIE
  - Fuel Graphite Irradiation
    - Pressed Graphite will be irradiated to fast fluence of 4×10^{25} m^{-2}
    - Properties measured - density, mass, dynamic Young's modulus, etc

P B M R

Design Data Needs
Nuclear Heat Supply System

DDN	Title	Section Ref.
NHSS-01	**FUEL**	**5.3.1**
NHSS-01-01	Fuel irradiation test for normal operational conditions	
NHSS-01-02	Fuel heating tests for accident conditions	
NHSS-01-03	Fuel Graphite irradiation tests	
NHSS -02	**CORE STRUCTURE CERAMICS**	**4.3.1**
NHSS-02-01	Extended Properties of Irradiated Graphite at Low Temperatures	
NHSS-02-02	Extended Properties of Irradiated Graphite at High Temperatures	

P B M R

Fuel Qualification Schedule

ID	Task Name	DDN	Duration	Start	Finish
1	**Fuel Irradiation Tests for Normal Operational Conditions**	**NHSS-01-01**	**2350 days**	**Mon 07/10/01**	**Fri 16/09/30**
2	Irradiation Planning and Preparation		260 days	Mon 07/10/01	Fri 08/09/26
3	Irradiation - Pre-Production Fuel		525 days	Mon 08/09/29	Fri 10/10/01
4	PIE and Analysis		130 days	Mon 10/10/04	Fri 11/04/01
5	Irradiation Planning and Preparation		260 days	Mon 11/04/04	Fri 12/03/30
6	Irradiation - Production Fuel		1045 days	Mon 12/04/02	Fri 16/04/01
7	PIE and Analysis		130 days	Mon 16/04/04	Fri 16/09/30
8	**Fuel Heating Tests for Accident Conditions**	**NHSS-01-02**	**1695 days**	**Mon 11/04/04**	**Fri 17/09/29**
9	Fuel Heatup Tests - Pre-Production Fuel		130 days	Mon 11/04/04	Fri 11/09/30
10	PIE and Analysis		130 days	Mon 11/10/03	Fri 12/03/30
11	Fuel Heatup Tests - Production Fuel		130 days	Mon 16/10/03	Fri 17/03/31
12	PIE and Analysis		130 days	Mon 17/04/03	Fri 17/09/29
13	**Fuel Graphite Irradiation Tests**	**NHSS-01-03**	**1307 days**	**Mon 08/09/29**	**Tue 13/10/01**
14	Irradiation Planning and Preparation		265 days	Mon 08/09/29	Fri 09/10/02
15	Irradiation/PIE		1042 days	Mon 09/10/05	Tue 13/10/01

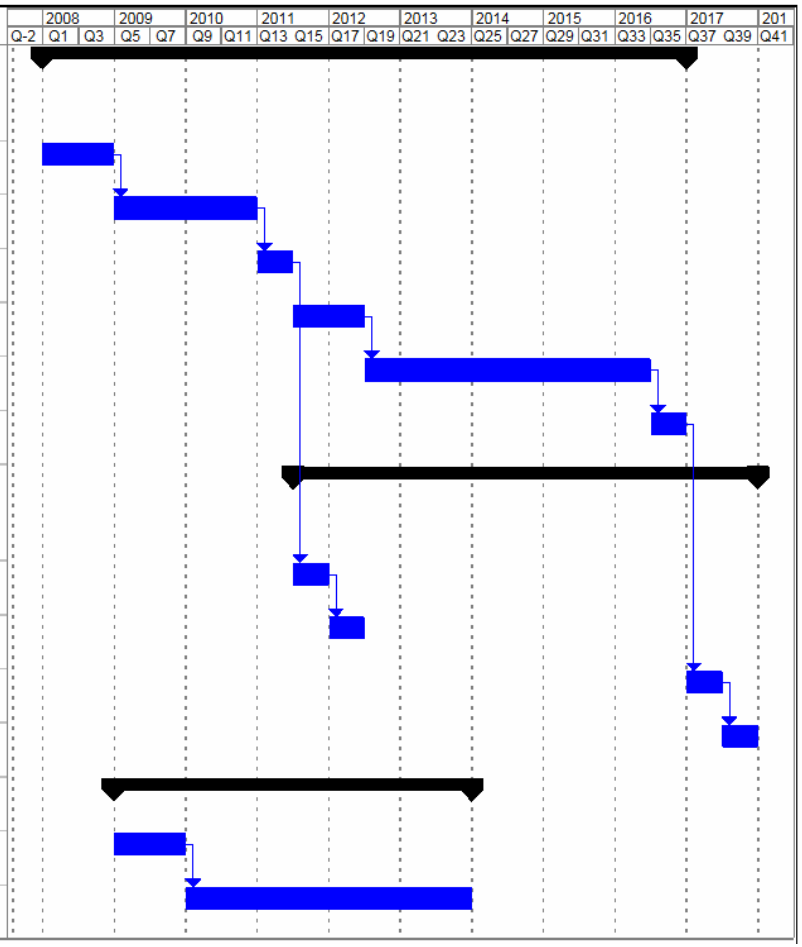

Westinghouse NGNP Team

Reflector Graphite Incremental Irradiation DDNs

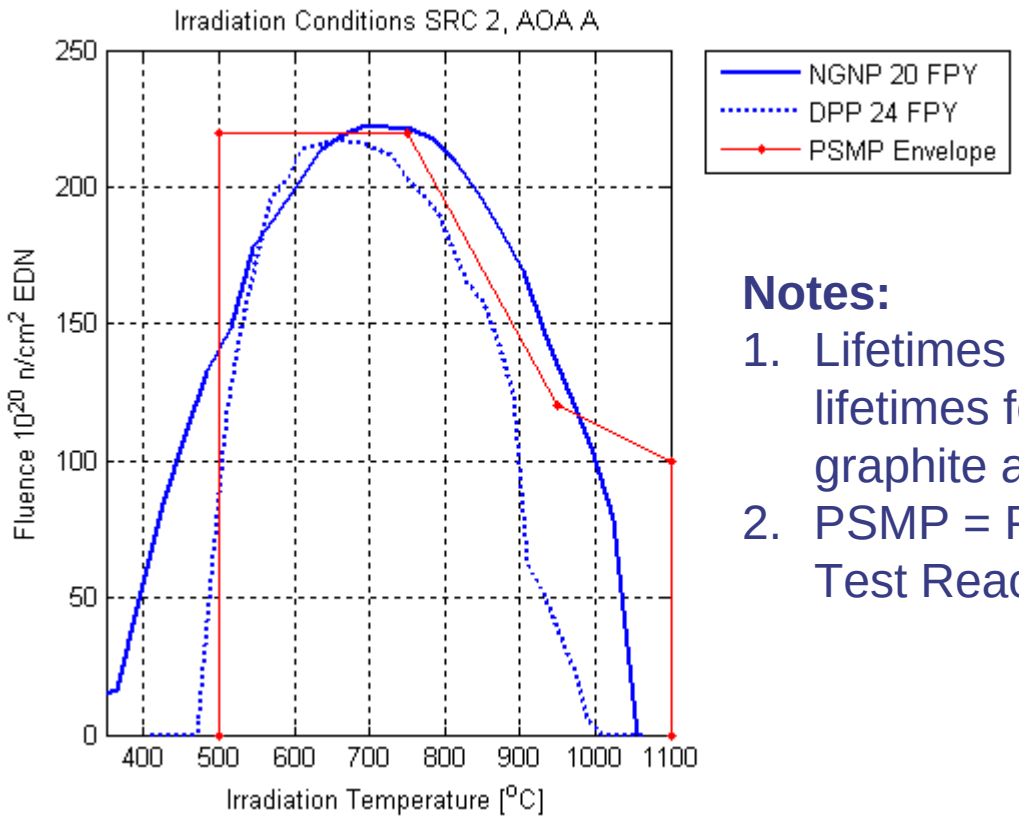

Notes:

1. Lifetimes specified in FPY are target lifetimes for replaceable reflector graphite adjacent to core
2. PSMP = PBMR-Specific Materials Test Reactor Program

P B M R

Reflector Graphite Technology Development Schedule

ID	Task Name	DDN	Duration	Start	Finish
1	**Extended Properties of Irradiated Graphite at Low Temperatures**	**NHSS-02-01**	**1827 days**	**Mon 07/10/01**	**Tue 14/09/30**
2	Irradiation Planning and Preparation		260 days	Mon 07/10/01	Fri 08/09/26
3	Irradiation/PIE Supporting COL		655 days	Mon 08/09/29	Fri 11/04/01
4	Irradiation Planning and Preparation		265 days	Mon 09/09/28	Fri 10/10/01
5	Irradiation/PIE Supporting Plant Startup		1042 days	Mon 10/10/04	Tue 14/09/30
6	**Extended Properties of Irradiated Graphite at High Temperatures**	**NHSS-02-02**	**1827 days**	**Mon 07/10/01**	**Tue 14/09/30**
7	Irradiation Planning and Preparation		260 days	Mon 07/10/01	Fri 08/09/26
8	Irradiation/PIE Supporting COL		655 days	Mon 08/09/29	Fri 11/04/01
9	Irradiation Planning and Preparation		265 days	Mon 09/09/28	Fri 10/10/01
10	Irradiation/PIE Supporting Plant Startup		1042 days	Mon 10/10/04	Tue 14/09/30

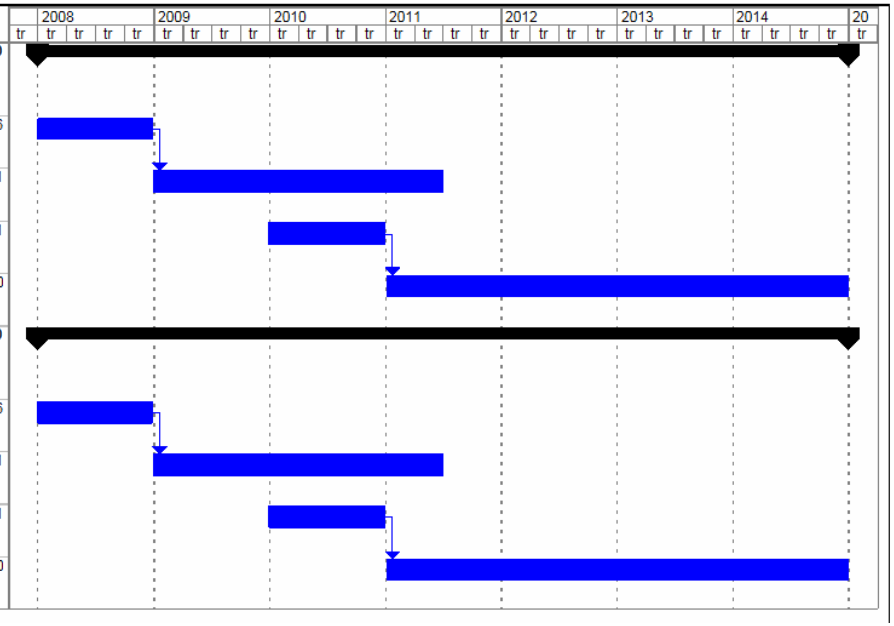

Nuclear Heat Supply System Technology Development Cost and Schedule

	FY2008	FY2009	FY2010	FY2011	FY2012	FY2013	FY2014	FY2015	FY2016	FY2017	TOTAL
Nuclear Heat Supply System											
Fuel	$0.5	$4.5	$6.5	$6.5	$6.5	$5.5	$3.5	$3.5	$3.5	$4.5	**$45.0**
Reflector Graphite	$0.5	$0.6	$0.8	$0.8	$0.7	$0.9	$0.7				**$5.0**
Subtotal	**$1.0**	**$5.1**	**$7.3**	**$7.3**	**$7.2**	**$6.4**	**$4.2**	**$3.5**	**$3.5**	**$4.5**	**$50.0**

Total Cost: $ 50 Million

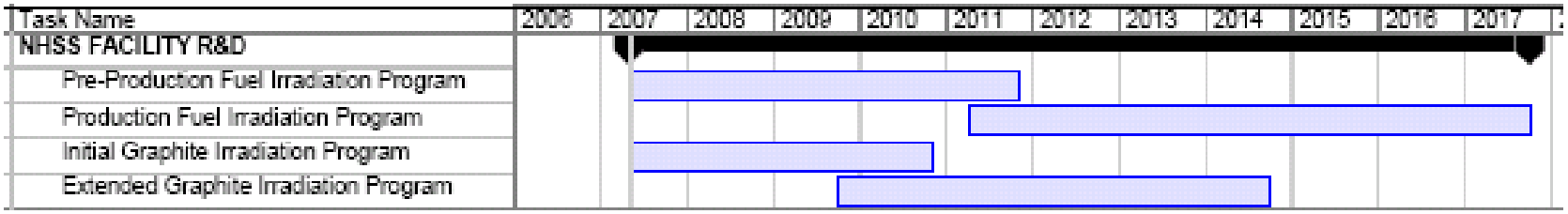

Heat Transport System

- **Intermediate Heat Exchanger**
  - Metallic
    - Materials Development and Qualification
    - Methods Development, Verification and Validation - Code Case
    - Code Case Development
  - Ceramic/Composite
    - Materials, design methods, manufacturing technology, etc.
  - Secondary Heat Transport System Mixing Chamber
    - Mixing Chamber Performance Test
  - High Temperature Ducts and Insulation
    - Evaluation of Alternatives

Design Data Needs Heat Transport System

DDN	Title
HTS-01	**Intermediate Heat Exchanger - Metallic**
HTS-01-01	Establish Reference Specifications for Alloy 617
HTS-01-02	Thermal/Physical and Mechanical Properties of Alloy 617
HTS-01-03	Welding and As-Welded Properties of Materials of Alloy 617for Compact Heat Exchangers
HTS-01-04	Aging Effects of Alloy 617
HTS-01-05	Environmental Effects of Impure Helium on Alloy 617
HTS-01-06	Influence of Grain Size on Materials Properties on Alloy 617
HTS-01-07	Establish Reference Specifications for Alloy 230
HTS-01-08	Thermal/Physical and Mechanical Properties of Alloy 230
HTS-01-09	Welding and As-Welded Properties of Materials of Alloy 230for Compact Heat Exchangers
HTS-01-10	Aging Effects of Alloy 230
HTS-01-11	Environmental Effects of Impure Helium on Alloy 230
HTS-01-12	Influence of Grain Size on Materials Properties on Alloy 230
HTS-01-13	Methods for Thermal/Fluid Modeling of Plate-Type Compact Heat Exchangers
HTS-01-14	Methods for Stress/Strain Modeling of Plate-Type Compact Heat Exchangers
HTS-01-15	Criteria for Structural Adequacy of Plate-Type Compact Heat Exchangers at Very High Temperatures
HTS-01-16	Methods for Performance Modeling of Plate-Type Compact Heat Exchangers
HTS-01-17	IHX Performance Verification
HTS-01-18	Data Supporting Materials Code Case
HTS-01-19	Data Supporting Design Code Case
HTS-02	**Intermediate Heat Exchanger - Ceramic**
HTS-02-01	Review Existing Technology
HTS-02-02	Materials Property Database
HTS-02-03	Design Methods
HTS-02-04	Performance Verification
HTS-02-05	Manufacturing Technology
HTS-02-06	Codes and Standards
HTS-03	**SHTS Helium Mixing Chamber**
HTS-03-01	Mixing Chamber Performance Test
HTS-04	**High Temperature Ducts and Insulation**
HTS-04-01	Evaluation of High Temperature Ducts and Insulation Systems

Slide 12

Westinghouse NGNP Team

Metallic Intermediate Heat Exchanger

ID	Task Name	DDN	Duration	Start	Finish
1	**Materials Development and Qualification**		**785 days**	**Mon 10/1/07**	**Fri 10/1/10**
2	**Alloy 617 Specification and Testing**		**785 days**	**Mon 10/1/07**	**Fri 10/1/10**
3	**Define Ref. Alloy 617 Specification**	**HTS-01-01**	45 days	Mon 10/1/07	Fri 11/30/07
4	Procure 3 Heats of Alloy 617 for Testing		305 days	Mon 12/3/07	Fri 1/30/09
5	**Thermal Physical and Mechanical Testing for Alloy 617**	**HTS-01-02**	195 days	Mon 2/2/09	Fri 10/30/09
6	**Weldability Assessment for Alloy 617**	**HTS-01-03**	195 days	Mon 2/2/09	Fri 10/30/09
7	**Aging Assessment for Alloy 617**	**HTS-01-04**	350 days	Mon 6/1/09	Fri 10/1/10
8	**Alloy 617 Environmental Effects Assessment**	**HTS-01-05**	350 days	Mon 6/1/09	Fri 10/1/10
9	**Grain Size Assessment for Alloy 617**	**HTS-01-06**	130 days	Mon 6/1/09	Fri 11/27/09
10	**Alloy 230 Specification and Testing**		**785 days**	**Mon 10/1/07**	**Fri 10/1/10**
11	**Define Reference Alloy 230 Specification**	**HTS-01-07**	45 days	Mon 10/1/07	Fri 11/30/07
12	Procure 3 Heats of Alloy 230 for Testing		305 days	Mon 12/3/07	Fri 1/30/09
13	**Thermal Physical and Mechanical Testing for Alloy 230**	**HTS-01-08**	195 days	Mon 2/2/09	Fri 10/30/09
14	**Weldability Assessment for Alloy 230**	**HTS-01-09**	195 days	Mon 2/2/09	Fri 10/30/09
15	**Aging Assessment for Alloy 230**	**HTS-01-10**	350 days	Mon 6/1/09	Fri 10/1/10
16	**Alloy 230 Environmental Effects Assessment**	**HTS-01-11**	350 days	Mon 6/1/09	Fri 10/1/10
17	**Grain Size Assessment for Alloy 230**	**HTS-01-12**	120 days	Mon 6/1/09	Fri 11/13/09
18	**Methods Development, Verification and Validation**		**1110 days**	**Mon 10/1/07**	**Fri 12/30/11**
19	**IHX Design Methods and Criteria**		**483 days**	**Wed 4/1/09**	**Fri 2/4/11**
20	General Model Development		393 days	Wed 4/1/09	Fri 10/1/10
21	**Thermal Structural Modeling**	**HTS-01-13**	90 days	Mon 10/4/10	Fri 2/4/11
22	**Stress/Strain Modeling**	**HTS-01-14**	90 days	Mon 10/4/10	Fri 2/4/11
23	**Criteria for Acceptable Stress/Strain**	**HTS-01-15**	90 days	Mon 10/4/10	Fri 2/4/11
24	**Performance Modeling Methods**	**HTS-01-16**	90 days	Mon 10/4/10	Fri 2/4/11
25	**IHX Performance Verification**	**HTS-01-17**	**980 days**	**Mon 10/1/07**	**Fri 7/1/11**
26	Facility Definition		130 days	Mon 10/1/07	Fri 3/28/08
27	Facility Modification/Construction		655 days	Mon 3/31/08	Fri 10/1/10
28	Prototype IHX Fabrication		215 days	Mon 4/5/10	Fri 1/28/11
29	IHX Life Prediction		105 days	Mon 2/7/11	Fri 7/1/11
30	IHX Durability Testing		105 days	Mon 2/7/11	Fri 7/1/11
31	IHX Performance Testing		105 days	Mon 2/7/11	Fri 7/1/11
32	IHX Materials Testing		105 days	Mon 2/7/11	Fri 7/1/11
33	**IHX Code Case**		**585 days**	**Mon 10/5/09**	**Fri 12/30/11**
34	**Materials Code Case**	**HTS-01-18**	585 days	Mon 10/5/09	Fri 12/30/11
35	**Design Code Case**	**HTS-01-19**	585 days	Mon 10/5/09	Fri 12/30/11

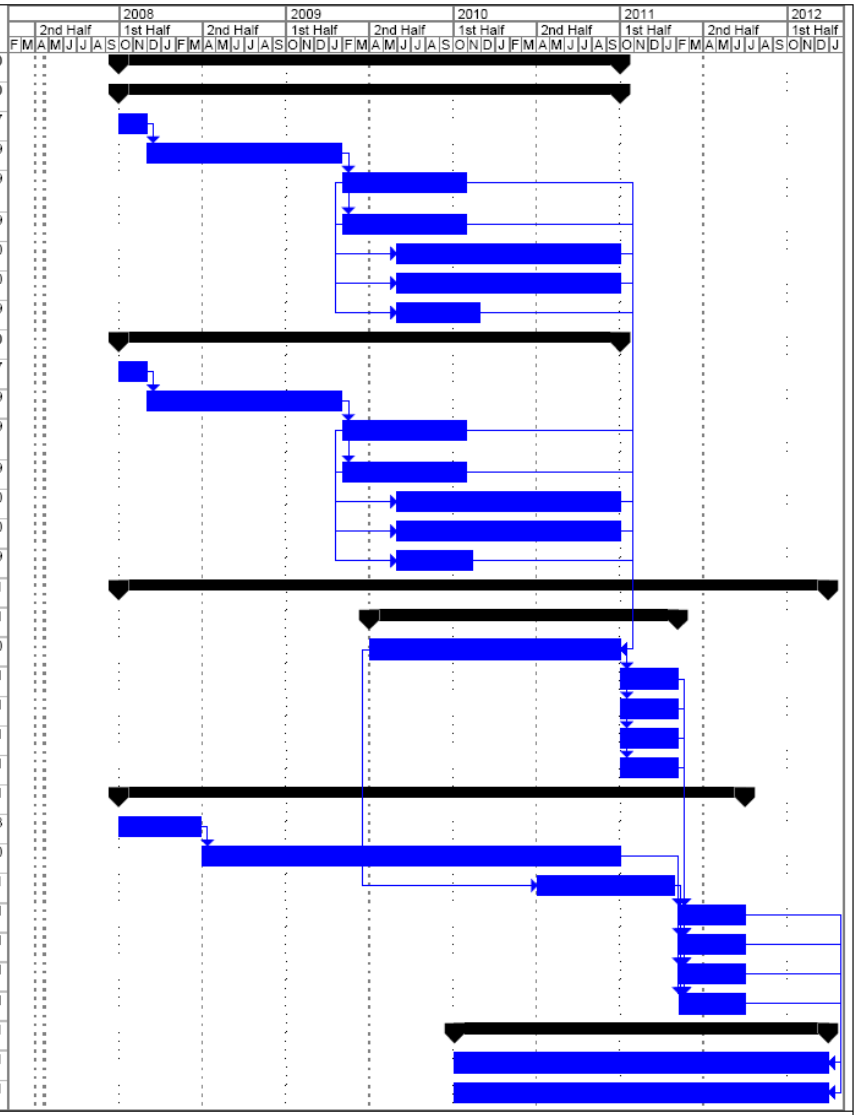

Project: Metallic IHX R+D
Date: Thu 4/19/07

Task | Progress | Milestone | Summary | Rolled Up Task | Rolled Up Milestone | Rolled Up Progress | Split | External Tasks | Project Summary | Group By Summary | Deadline

Page 1

Ceramic Intermediate Heat Exchanger

ID	Task Name	DDN	Duration	Start
1	**Materials Development and Qualification**		**520 days?**	**Mon 10/1/07**
2	Define Requirements		0 days	Mon 10/1/07
3	Review Existing Technology	HTS-02-01	130 days?	Mon 10/1/07
4	Select Reference Technology/Vendor		0 days	Fri 3/28/08
5	**Materials Properties Database**	HTS-02-02	**390 days?**	**Mon 3/31/08**
6	Mechanical and Physical Properties		390 days?	Mon 3/31/08
7	Fracture Behavior/Weibull Statistics Data		390 days	Mon 3/31/08
8	Helium Environment Compatibility Data		390 days	Mon 3/31/08
9	Long-Term Environmental Aging Tests		390 days?	Mon 3/31/08
10	**Methods Development, Verification and Validation**		**1955 days?**	**Mon 3/31/08**
11	**Design Methods**	HTS-02-03	**650 days**	**Mon 3/31/08**
12	Sizing and Performance		650 days	Mon 3/31/08
13	**Thermal and Structural Evaluation**		**650 days**	**Mon 3/31/08**
14	Load Induced Stresses		650 days	Mon 3/31/08
15	Thermally Induced Stresses (SS/Transient)		650 days	Mon 3/31/08
16	Failure Probability/Reliability		650 days	Mon 3/31/08
17	**Performance Verification (Facility Incremental to Metal)**	HTS-02-04	**915 days**	**Mon 3/29/10**
18	**Structural Testing**		**915 days**	**Mon 3/29/10**
19	Cell/Stack Level		525 days	Mon 3/29/10
20	Module Level		390 days	Mon 4/2/12
21	**Performance Testing**		**915 days**	**Mon 3/29/10**
22	Cell/Stack Level		525 days	Mon 3/29/10
23	Module Level		390 days	Mon 4/2/12
24	**Manufacturing Technology**	HTS-02-05	**650 days?**	**Mon 3/31/08**
25	Ceramic to Ceramic Joints		390 days	Mon 3/31/08
26	Ceramic to Metal Joints		390 days	Mon 3/31/08
27	Header/Piping Development		260 days?	Mon 9/28/09
28	**Codes and Standards**	HTS-02-06	**1305 days**	**Mon 9/27/10**
29	Test Methods (e.g., ASTM)		785 days	Mon 9/27/10
30	Design Codes (e.g., ASME)		1305 days	Mon 9/27/10

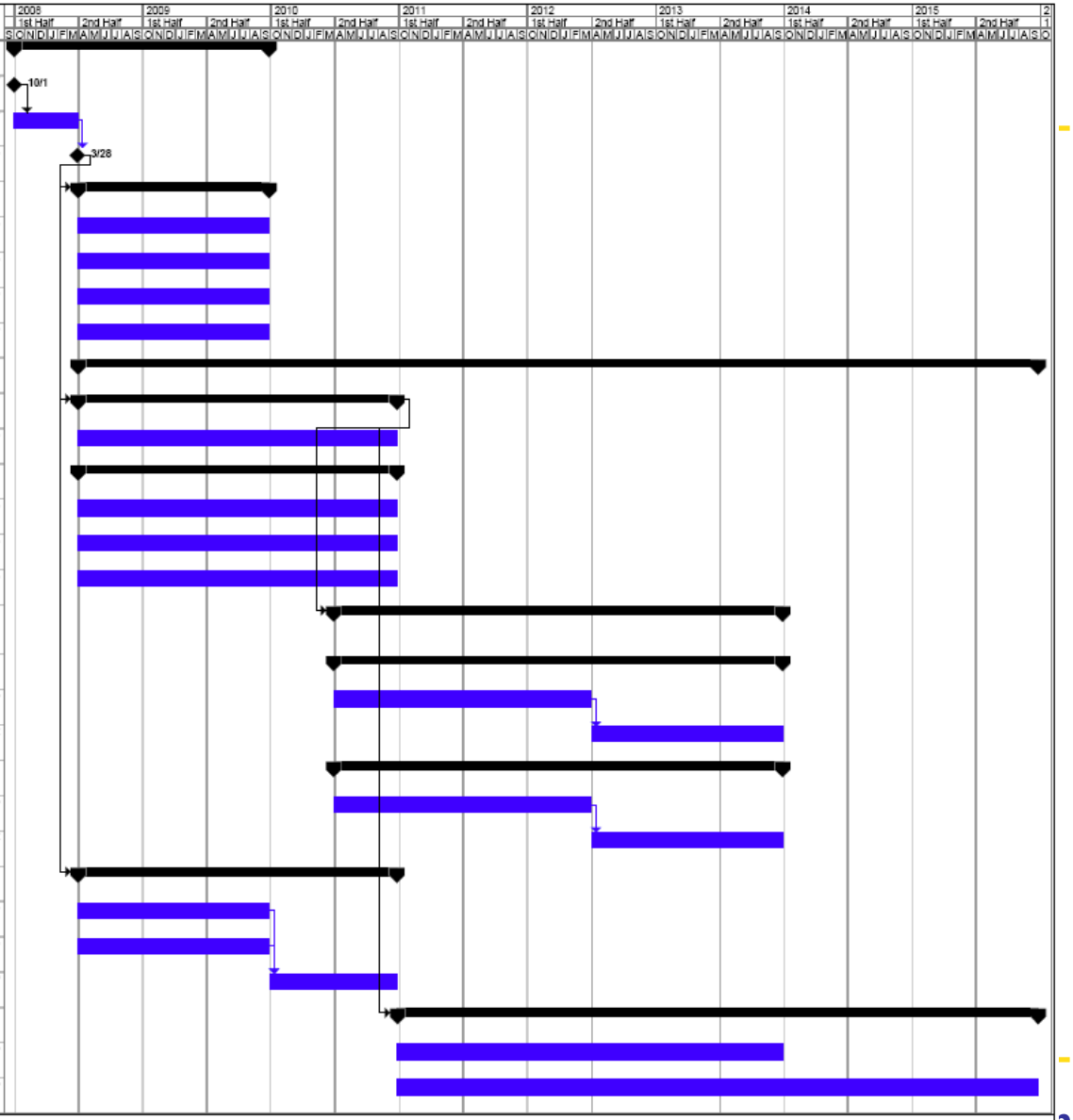

Project: Ceramic IHX R and D
Date: Mon 3/26/07

Task | Progress | Milestone | Summary | Rolled Up Task | Rolled Up Milestone | Rolled Up Progress | Split | External Tasks | Project Summary | Group By Summary | Deadline

Page 1

P B M R

Other Components
Heat Transport System

ID	Task Name	DDN	Duration	Start	Finish
1	**Materials Development and Qualification**		**520 days**	**Mon 10/4/10**	**Fri 9/28/12**
2	Mixing Chamber Performance Test at HTTF	HTS-03-01	520 days	Mon 10/4/10	Fri 9/28/12
3	**Materials Development and Qualification**		**520 days**	**Mon 6/30/08**	**Fri 6/25/10**
4	High Temperature Ducts and Insulation	HTS-04-01	520 days	Mon 6/30/08	Fri 6/25/10

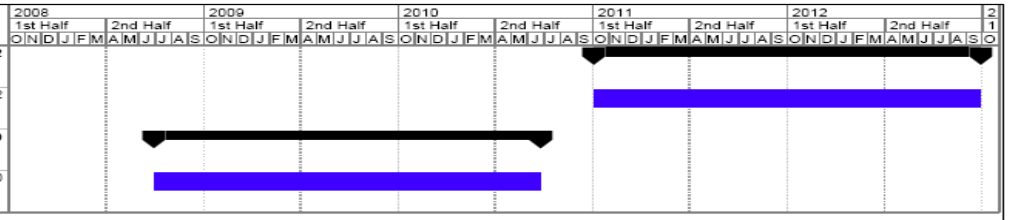

Mixing Chamber
High Temperature Ducts and Insulation

Project: Other HTS R and D
Date: Wed 4/4/07

Task | Progress | Milestone | Summary | Rolled Up Task | Rolled Up Milestone | Rolled Up Progress | Split | External Tasks | Project Summary | Group By Summary | Deadline

Page 1

P B M R

Heat Transport System Costs and Schedule

Heat Transport System	FY08	FY09	FY10	FY11	FY12	FY13	FY14	FY15	TOTAL
Metallic IHX	$3.9	$6.9	$6.0	$2.0	$0.3				$19.0
Ceramic IHX	$3.6	$6.6	$5.2	$4.5	$4.3	$4.3	$0.6	$0.6	$29.6
HTS Other (Mx & Ins)	$0.4	$1.1	$0.8	$1.1	$1.1				$4.5
Subtotal	$7.8	$14.6	$11.9	$7.6	$5.7	$4.3	$0.6	$0.6	$53.1

Total Cost: $ 53.1 Million

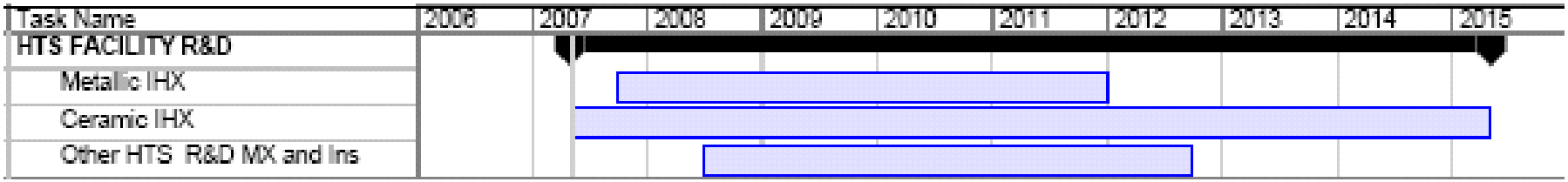

P B M R

Hydrogen Plant

- Basic Thermodynamic and Kinetics Data for Hybrid Sulfur Process
- Materials
  - Gasket, seal, welding, cladding, coating, and piping
- Feed Purification
  - Tolerance for impurities
  - Methods
- Decomposer
  - Catalyst
  - Pilot scale decomposer
  - Design code case
- Sulfuric Acid Concentrator
- SO_2 Absorber
- Electrolyzers
- Product Purification

Hydrogen Plant Design Data Needs

DDN	Title
HPS-01	**Basic Data**
HPS-01-01	Confirm Thermodynamic Data for the HyS Process
HPS-01-02	Gather Reaction Kinetics Data
HPS-01-03	Analyze Data and Improve simulation
HPS-02	**Supplementary Materials**
HPS-02-01	Develop Gasket Materials and Design
HPS-02-02	Develop Seal Materials and Design
HPS-02-03	Develop Welding Materials
HPS-02-04	Develop Cladding and Coating Materials
HPS-02-05	Develop Piping Materials and Design Methods
HPS-03	**Feed Purification**
HPS-03-01	Determine Decomposer Tolerance for Impurities
HPS-03-02	Determine Electrolyzer Tolerance for Impurities
HPS-03-03	Test Sulfuric Acid Decomposition Methods
HPS-03-04	Test Feed Water Purification Methods
HPS-04	**Decomposer**
HPS-04-01	Develop a Commercial Sulfuric Acid Decomposition Catalyst
HPS-04-02	Test Silicon Carbide and other Ceramic Material in Decomposition Service
HPS-04-03	Test Alloy 230 and Alloy 617 in a High Temperature Sulfuric Acid, Sulfur Dioxide and Oxygen Atmosphere
HPS-04-04	Develop a Method to Bond Alloy 230 or Alloy 617 or Similar Materials to Silicon Carbide and other Ceramics
HPS-04-05	Develop Materials to Seal the Joints between Ceramic Decomposer Elements and the Metallic Tubesheet or Vessel
HPS-04-06	Test a Pilot-scale Decomposer
HPS-04-07	Data Supporting Design Code Case
HPS-05	**Sulfuric Acid Concentrator**
HPS-05-01	Measure the Height Equivalent to a Theoretical Plate (HETP) for the Concentrator
HPS-06	**SO2 Absorbers**
HPS-06-01	Measure the Height Equivalent to a Theoretical Plate (HETP) for the SO_2 Absorbers
HPS-07	**Electrolyzers**
HPS-07-01	Optimize Catalyst Loading in the Electrodes
HPS-07-02	Develop a Cell Membrane
HPS-07-03	Develop a Cell Configuration and Materials
HPS-07-04	Build and Test a Prototype Cell
HPS-07-05	Build and Test a Pilot-scale Cell
HPS-07-06	Build and Test a Stack of Cells in a Pilot Plant
HPS-08	**Product Purification**
HPS-08-01	Identify Product Impurities
HPS-08-02	Test Product Purification Methods

Westinghouse NGNP Team

P B M R

Hydrogen Plant Schedule

ID		Task Name
1		Hydrogen Production System R&D
2		Design
3		Conceptual Design
4		Preliminary Design
5		Basic Data
9		Supplementary Materials
15		Feed purification
21		Decomposer
30		Sulfuric Acid Concentrator
32		SO2 Absorbers
34		Electrolyzer
43		Product Purification
46		Instrumentation and Controls

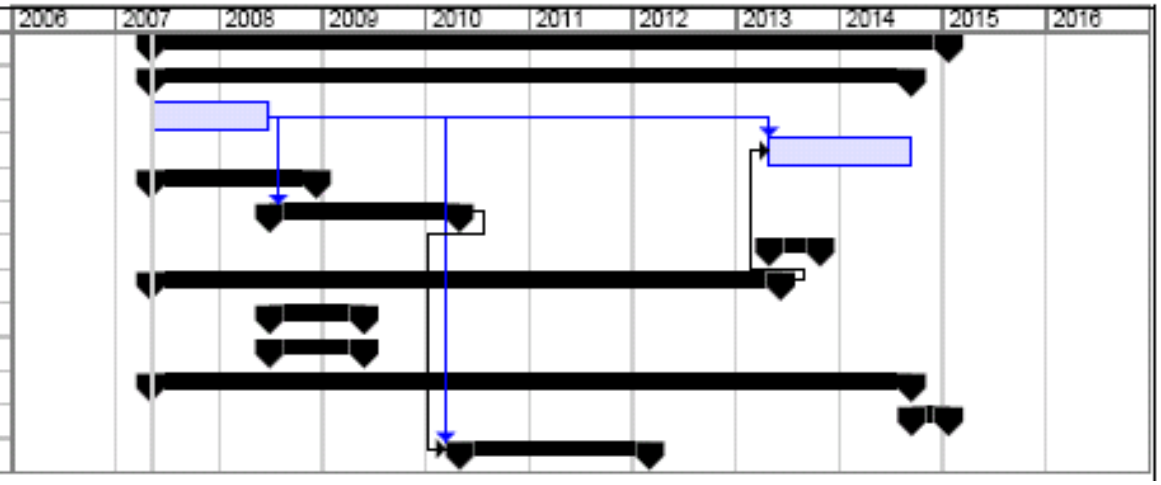

P B M R

Hydrogen Plant Cost

Hydrogen Facility	FY08	FY09	FY10	FY11	FY12	FY13	FY14	FY15	TOTAL
Basic Data	$1.0	$0.3							$1.3
Materials		$3.3	$2.7						$6.0
Feed Purification				$0.8					$0.8
Decomposer	$2.9	$3.0	$2.2	$2.1	$5.2	$3.1			$18.4
Concentrator and Absorber		$1.1							$1.1
Electrolyzer	$1.6	$2.6	$2.8	$3.4	$4.4	$3.2	$8.1	$2.8	$29.0
Product Purification + Sensing and Control				$1.3	$0.1			$0.2	$1.7
Subtotal	$5.5	$10.3	$7.8	$7.6	$9.7	$6.3	$8.1	$3.1	$58.4

Total Cost: $ 58.4 Million

Power Conversion System Technology Development Plan

- Steam Generator
  - Larger thermal rating compared to operating base
  - Uncertainties in performance characteristics of helium and water sides of tubes
  - Structural verification
  - Fabrication and assembly techniques

Design Data Needs Power Conversion System

DDN #	Data Need Described in Section 8.3	Category	Sub Category	Major R&D Task to Satisfy Need
PCS-01-01	Secondary side Corrosion Characteristics 800H & 2-1/4Cr-1Mo and Weldments	Materials	-	Long term material testing in appropriate environment
PCS-01-02	Helium Environment Effects on 2-1/4 Cr-1Mo	Materials	-	Long term material testing in appropriate environment
PCS-01-03	Helium Environment Effects on 800H	Materials	-	Long term material testing in appropriate environment
PCS-01-04	Acoustic Loading (sound pressure spectra)	MDV&V	Performance& Design	Acoustic testing to establish configuration specific acoustic fields inside steam generator
PCS-01-05	Large Helical Coil Fabrication Methods	MDV&V	Fabrication	Perform mockup test of full scale coils and support structure
PCS-01-06	Inlet Flow Distribution	MDV&V	Performance	Perform full scale geometry airflow test of inlet region of tube bundle
PCS-01-07	Mechanical Performance of Insulation Components	MDV&V	Design	Perform mockup tests to validate selected configuration
PCS-01-08	Fretting & Sliding Wear Protection Characteristics of Tube Protection Devices	MDV&V	Design	Perform testing to show selected conservative relative to existing wear and wear rate data base.
PCS-01-09	Confirmation of Tube Wear Protection Device Design	MDV&V	Design	Perform mockup testing to demonstrate functional and fabrication aspects of selected design
PCS-01-10	Develop Shroud Seal Design	MDV&V	Design	Perform mockup testing to demonstrate feasibility and functional performance of selected design
PCS-01-11	Confirm mechanical design of Lead-in/Lead-out/Transition/Expansion Loop	MDV&V	Fabrication	Perform 3-D Modeling and Partial Physical Mock-ups of Selected Arrangement
PCS-01-12	Flow Induced Vibration Characteristics of Helical Bundle	MDV&V	Performance	Gather vibration data from instrument tubes in the airflow testings program (see SG-6)
PCS-01-13	Orifice Qualification Data	MDV&V	Performance	Perform orifice testing to establish pressure drop characteristics of selected design.
PCS-01-14	Instrumentation Attachment Methods Validation	MDV&V	Design	Perform mockup tests to demonstrate attachment and assembly feature of SG instrumentation
PCS-01-15	Confirm Bi-Metallic Weld Structural Integrity	MDV&V	Design	Perform tests to confirm acceptable envelop of high temperature operation.
PCS-01-16	Helical Bundle and Transition Region Heat Transfer Characteristics	MDV&V	Performance	Perform tests in air with prototypic geometry to provide heat transfer and

Westinghouse NGNP Team

P B M R

Power Conversion Schedule

ID	Task Name	DDN	Duration	Start
1	Secondary side Corrosion Characteristics 800H & 2-1/4Cr-1Mo and Weldments	PCS-01-01	1044 days	Wed 10/1/08
2	Helium Environment Effects on 2-1/4 Cr-1Mo	PCS-01-02	24 days	Mon 10/1/07
3	Helium Environment Effects on 800H	PCS-01-03	1 day	Mon 10/1/07
4	Acoustic Response of Helical Bundle	PCS-01-04	665 days	Mon 9/28/09
5	Large Helical Coil Fab Test	PCS-01-05	523 days	Thu 10/1/09
6	Inlet Flow Distribution	PCS-01-06	739 days	Wed 10/1/08
7	Insulation Verification Test	PCS-01-07	523 days	Wed 10/1/08
8	Fretting & Sliding Wear Protection Tests	PCS-01-08	523 days	Wed 10/1/08
9	Tube Wear Protection Device Testing	PCS-01-09	978 days	Wed 10/1/08
10	Shroud Seal Test	PCS-01-10	913 days	Wed 10/1/08
11	Lead-in/Lead-out/Transition/Expansion Loop Mockups	PCS-01-11	523 days	Fri 10/1/10
12	Flow Induced Vibration Testing of Helical Bundle	PCS-01-12	600 days	Thu 10/1/09
13	Orifice Qualification Test	PCS-01-13	652 days	Thu 10/1/09
14	Instrumentation Attachment Test	PCS-01-14	400 days	Fri 10/1/10
15	Bi-Metallic Weld Structural Integrity	PCS-01-15	782 days	Thu 10/1/09
16	Helical Bundle and Transition Region Heat Transfer Test	PCS-01-16	522 days	Thu 10/1/09
17	Tubing Inspection Methods and Equipment	PCS-01-17	783 days	Wed 10/1/08
18	Review and Reassemble Existing SG Development Data Base	PCS-01-18	262 days	Mon 10/1/07

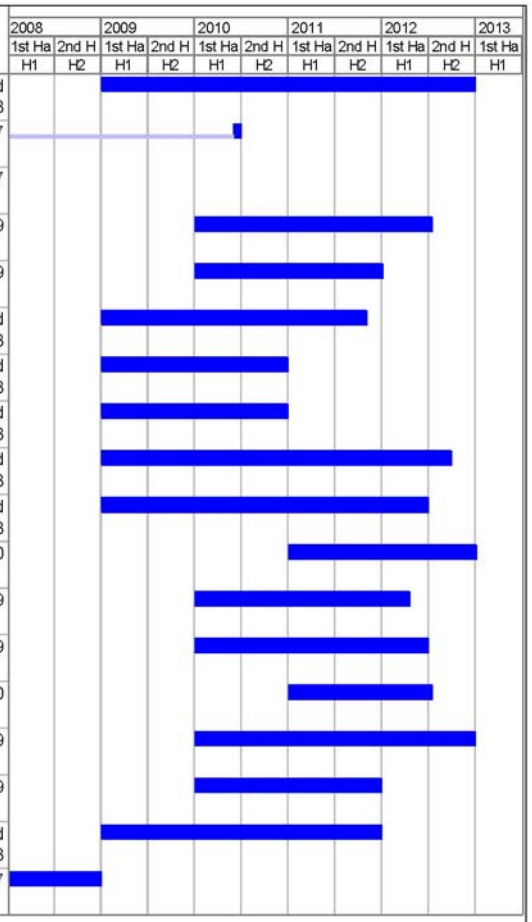

Page 1

Power Conversion Costs

Power Conversion			FY08	FY10	FY11	FY12	FY13	Total
Steam Generator			0.624	4.092	7.274	7.741	2.814	22.545

Total Cost: $ 22.5 Million

P B M R

Summary
Technology Development Needs

Nuclear Heat Supply System	Cost	Start	Finish
Fuel Qualification	$ 45M	08	17
Graphite	5.0	08	11
Heat Transport System			
Intermediate Heat Exchanger Metallic	19.0	08	12
Ceramic Heat Exchanger	26.9	08	15
HTS other	4.5	09	10
Hydrogen Facility			
Decomposer, Electrolyzer, Absorber	48.5	08	15
Other - Purification, etc	9.8	09	15
Power Conversion	22.5	08	12
Total Enabling Technology Development	**$184 M**	**08**	**17**

P B M R

Technology Development Integrated Schedule

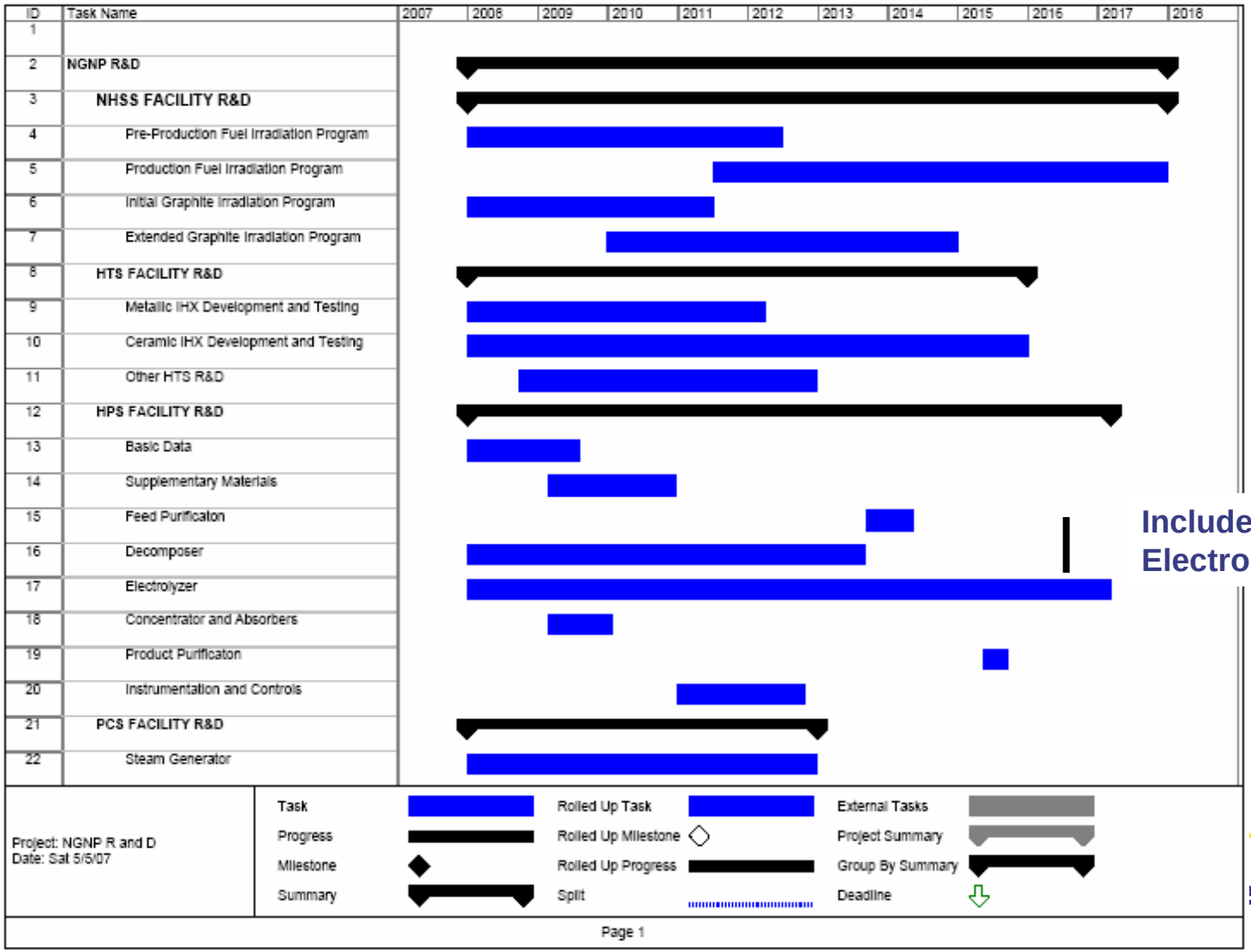

Includes building Electrolyzer for plant

e NGNP Team

Technology Development Costs

	FY2008	FY2009	FY2010	FY2011	FY2012	FY2013	FY2014	FY2015	FY2016	FY2017	TOTAL
Nuclear Heat Supply System											
Fuel	0.5	4.5	6.5	6.5	6.5	5.5	3.5	3.5	3.5	4.5	45.0
Reflector Graphite	0.5	0.6	0.8	0.8	0.7	0.9	0.7				5.0
Subtotal	1.0	5.1	7.3	7.3	7.2	6.4	4.2	3.5	3.5	4.5	50.0
Heat Transport System											
Metallic IHX	3.9	6.9	6.0	2.0	0.3						19.0
Ceramic IHX	3.6	6.6	5.2	4.5	4.3	4.3	0.6	0.6			29.6
HTS Other	0.4	1.1	0.8	1.1	1.1						4.5
Subtotal	7.8	14.6	11.9	7.6	5.7	4.3	0.6	0.6			53.1
Hydrogen Facility											
Basic Data	1.0	0.3									1.3
Materials		3.3	2.7								6.0
Feed Purification				0.8							0.8
Decomposer	2.9	3.0	2.2	2.1	5.2	3.1					18.4
Concentrator and Absorber		1.1									1.1
Electrolyzer	1.6	2.6	2.8	3.4	4.4	3.2	8.1	2.8			29.0
Product Purification + Sensing and Control				1.3	0.14			0.2			1.7
Subtotal	5.5	10.3	7.8	7.6	9.7	6.3	8.1	3.1			58.4
Power Conversion Facility											
Steam Generator R&D	0.6	4.1	7.3	7.7	2.8						22.5
Total Technology Development	**14.9**	**34.1**	**34.3**	**30.2**	**25.5**	**16.9**	**13.0**	**7.2**	**3.5**	**4.5**	**184.0**

P B M R

Possible Enhancing Technology Development Needs

- Advanced Fuel Development
  - Zirconium Carbide/UCO Fuel
- Advanced Fuel Manufacturing
  - Continuous processing and automation
- Advanced Fuel cycle investigations
  - Deep burn
  - Thorium fuel cycle
- Design code verification & validation collaboration
  - Enhanced coupled thermal/neutronics analysis of plant
- Fundamental Properties of Nuclear Graphite
  - Properties for enhanced lifetime
- High Temperature Heat Transport via Liquid Salt
  - Alternative heat transport media

Technology Development Key Issues

- Development of IHX materials for 950ºC and 9 MPa
- Development of Hybrid Sulfur basic components for process – decomposer and electrolyzer
- Confirmation of fuel performance for higher temperatures

NGNP-17-RPT-001 **May 2007**
Revision 0

NGNP and Hydrogen Production Preconceptual Design Report

SECTION 17: LICENSING AND PERMITTING

Revision 0

APPROVALS

Function	Printed Name and Signature	Date
Author	Stanley E. Ritterbusch Westinghouse Electric Company, LLC	May 17, 2007
Reviewer	Edward M. Burns PBMR (Pty) Ltd	May 17, 2007
Approval	Sten A. Caspersson Westinghouse Electric Company, LLC	May 17, 2007

Westinghouse Electric Company LLC
Nuclear Power Plants
Post Office Box 355
Pittsburgh, PA 15230-0355

©2007 Westinghouse Electric Company LLC
All Rights Reserved

LIST OF CONTRIBUTORS

Name and Organization	Date
Edward G. Wallace PBMR (Pty) Ltd	May 2007
Edward M. Burns PBMR (Pty) Ltd	May 2007
Stanley E. Ritterbusch Westinghouse Electric Company	May 2007

BACKGROUND INTELLECTUAL PROPERTY

Section	Title	Description
NONE		NONE

REVISION HISTORY

RECORD OF CHANGES

Revision No.	Revision Made by	Description	Date
0	Stanley E. Ritterbusch Westinghouse Electric Company	Initial Issue	May 17, 2007

DOCUMENT TRACEABILITY

Created to support the following Document(s)	Document Number	Revision
NGNP and Hydrogen Production Preconceptual Design Report	NGNP-01-RPT-001	0

TABLE OF CONTENTS

LIST OF TABLES **17-6**

LIST OF FIGURES **17-6**

17 LICENSING AND PERMITTING **17-7**

SUMMARY AND CONCLUSIONS **17-7**

INTRODUCTION **17-9**

17.1 LICENSING STRATEGY OVERVIEW **17-10**

17.1.1 SUMMARY OF LICENSING STRATEGY **17-10**

17.1.2 CAPITALIZATION ON PBMR PRE-APPLICATION WORK **17-12**

17.2 LICENSE APPLICATION STRATEGY **17-13**

17.2.1 COMMERCIAL UTILIZATION FACILITY – R&D TESTING **17-13**

17.2.2 RECOMMENDED STRATEGY: PRE-APPLICATION + ESP + LWA + COL **17-13**

17.2.3 SCHEDULE IMPACT CONSIDERATIONS **17-14**

17.2.4 NGNP COMMERCIAL PLANT LINKAGES WITH THE NGNP LICENSING STRATEGY **17-15**

17.3 RISK TREATMENT STRATEGY **17-17**

17.4 REGULATORY COMPLIANCE STRATEGY **17-19**

17.4.1 OVERVIEW OF NRC/NGNP PRE-APPLICATION PROGRAM **17-19**

17.4.1.1 Objectives and Scope 17-19

17.4.1.2 Licensing Review Basis Document 17-20

17.4.2 OVERVIEW OF NGNP APPLICATIONS TO THE NRC **17-22**

17.4.2.1 License Application Contents 17-22

17.4.2.1.1 ESP Application 17-22

17.4.2.1.2 COL Application 17-23

17.4.2.2 Regulatory Criteria 17-23

17.4.2.2.1 Regulations 17-23

17.4.2.2.2 Policy Issues 17-24

17.4.2.2.3 Standard Review Plans, Regulatory Guides, and Other Guidance 17-25

17.4.3 OVERVIEW OF STATE AND LOCAL PERMIT STRATEGY **17-26**

17.5 TECHNICAL ISSUES STRATEGY **17-27**

17.5.1 TECHNICAL ISSUES AGENDA WITH NRC STAFF **17-27**

17.5.2 PBMR DESIGN CERTIFICATION PROGRAM SYNERGY 17-27
17.5.3 INDUSTRY COLLABORATION.....17-29
17.6 EXECUTION STRATEGY 17-31
17.7 COMPLEXITY, RISKS, AND FUTURE STUDIES.....17-32
17.7.1 COMPLEXITIES AND RISKS.....17-32
17.7.2 FUTURE STUDIES.....17-33
REFERENCES.....17-34
LIST OF ASSUMPTIONS.....17-36
APPENDICES.....17-37
APPENDIX 17A FINAL DESIGN REVIEW PRESENTATION TO BEA 17-37

LIST OF TABLES

NONE

LIST OF FIGURES

NONE

17 LICENSING AND PERMITTING

SUMMARY AND CONCLUSIONS

Licensing is recognized as a major cost and schedule risk for the NGNP project. This section presents a licensing strategy for the PBMR-based NGNP project that seeks to mitigate such risks. Key elements include (1) a license application strategy, (2) the treatment of risks, (3) regulatory compliance, (4) technical issue resolution, and (5) strategy execution. The influences that could impact the execution of the licensing process and require changes to the schedule of the licensing effort are also addressed. Schedule and cost estimates for executing the NGNP licensing strategy are included in PCDR Sections 18 and 19, respectively. The resultant strategy supports a NGNP operation date of 2018, assuming adequate resources for the overall project plus NRC acceptance of the PBMR's nuclear safety concept. An overview of the strategy follows:

- The PBMR-based NGNP licensing strategy fulfills the requirements in the Energy Policy Act of 2005 for licensing by the NRC and is supportive of the Act's prescribed generic NGNP licensing strategy concurrently being advanced between the DOE/INL and the NRC.
- The PBMR-based NGNP licensing strategy is also consistent with and supportive of the generic NGNP licensing strategy concurrently being advanced by the NGNP Working Group that seeks to establish a Public/Private Partnership between DOE and an end-user based Alliance that can serve as the applicant for the DOE-owned NGNP.
- The PBMR-based NGNP licensing strategy builds upon the ongoing PBMR Design Certification Pre-Application Program with the NRC that is currently addressing generic issues supportive to all the above.
- An integrated NGNP pre-application program (of approximately 56 months duration) should be conducted with NRC.
- The license application strategy for NGNP should be based on the regulations of 10 CFR Part 52, including (1) review and receipt of an Early Site Permit (ESP) within about 21 months, (2) review and receipt of a Combined License (COL, for construction and operation) within about 36 months, and (3) a Limited Work Authorization (LWA) for early site work.
- Implementation of risk-informed, performance-based methods provides a means for logical evaluation and resolution of regulatory compliance issues – especially those related to non-LWR technology.
- Successful collaboration with supporting industry programs is important to the timely resolution of safety issues with the NRC staff, including coordination of R&D with the NRC, national laboratories, and other supporting programs.

- The ESP and COL for the NGNP at INL will establish a precedent for applying Part 52 to a non-LWR design and, specifically, will provide a firm basis for timely Design Certification, licensing, and operation of follow-on NGNP derivative commercial plants.

The proposed licensing strategy should be further developed in the conceptual design phase of the NGNP program including the following major activities:

- Establish an integrated NGNP Licensing Strategy, including a project schedule, acceptable to all stakeholders.
- Establish the NGNP Licensing Review Basis document, including:
  - Contents of the pre-application program plus the ESP, LWA and COL applications, including lessons learned from LWR ESP and COL experience,
  - The leveraging of the PBMR Design Certification Pre-Application Program for resolution of selected regulatory and safety issues and results of the filtering process for determining which regulations are applicable, partly applicable or not-applicable, and the needed exemptions, and
  - The approach to resolution of safety and regulatory issues unique to NGNP.
- Establish an integrated Regulatory Technology Development Plan that will serve as the basis for any independent R&D needs by the NRC.
- Establish an integrated plan for the preparation of environmental permitting applications.

INTRODUCTION

The purpose of the Licensing and Permitting Section is to present an overall licensing strategy for the PBMR-based NGNP project. This effort builds on the earlier NGNP Licensing and Permitting Special Study [17-1] that addressed specific issues.

The licensing strategy is described in the following sections of this report: 17.1 – Licensing Strategy Overview, 17.2 - License Application Strategy, 17.3 – Risk Treatment Strategy, 17.4 – Regulatory Compliance Strategy, 17.5 – Technical Issues Strategy, 17.6 – Execution Strategy, and 17.7 – Complexity, Risks and Future Studies. The breadth of the activities here are important to understand for licensing a new reactor type. Old regulatory frameworks are cumbersome to work within and are focused on LWR technology, new technologies like advanced digital control systems challenge conventional regulatory thinking and design practices, codes and standards need to be created or updated, and the regulators and public must be educated on the new technology in order to accept it. Thus, this strategy goes beyond the relatively narrow issues associated with the application schedule and looks at all of the elements needed for a least-cost, shortest-schedule and least-risk licensing program.

The basic assumptions underlying the licensing strategy are that: (1) the PBMR Design Certification program, including pre-application activities, will be leveraged to reduce the time, effort and risk in establishing the regulatory approach to common or generic modular HTGR requirements, (2) a reliable and high quality supply of the initial fuel will be available from the PBMR (Pty) Ltd. fuel manufacturing plant in South Africa when needed and which will meet US NRC requirements (therefore, review of fuel manufacturing is not addressed further in this licensing strategy), (3) spent fuel will be stored on-site and, therefore, the licensing strategy does not include transportation of spent fuel to an off-site location[1], (4) the new "technology-neutral framework" rule set (i.e., the expected Part 53) will not be in place in time to support the NGNP license application, and (5) the NGNP program and the licensing schedule in particular are supported by adequate resources as required by the work plan.

All acronyms are defined in PCDR Appendix A.

[1] Except for the normal environmental reviews associated with Tables S-3 and S-4 of NRC's regulations in 10 CFR Part 51.

17.1 LICENSING STRATEGY OVERVIEW

This licensing strategy for the NGNP project serves a number of objectives, namely:

- Compliance with the requirement in the Energy Policy Act of 2005 for licensing by the US Nuclear Regulatory Commission (NRC),
- Meeting NRC regulations and satisfying regulatory obligations of the Owner (US Department of Energy, DOE) and the envisioned applicant – a Public/Private Partnership between DOE and an end-user based NGNP Alliance,
- Providing demonstration of ESP and COL processes for a non-LWR that will serve as benchmarks for parallel commercial project initiatives that would follow the NGNP,
- Support of timely construction and startup of the NGNP – targeted for operation by 2018,
- Providing a foundation for regulatory compliance during operation, and
- Providing data and startup experience that supports timely Design Certification of the follow-on commercial plants.

The elements of the licensing strategy that meet the above objectives are described in the subsections below.

17.1.1 Summary of Licensing Strategy

The licensing strategy proposed for the NGNP at INL includes the following basic elements:

- License Application (Section 17.2): The recommended strategy is to apply for (1) an Early Site Permit (ESP), (2) a Limited Work Authorization (LWA) for work on "safety analysis report" structures and (3) a Combined License (COL) under 10 CFR Part 52. Early "non-safety" site preparation work no longer requires NRC authorization according to regulation revisions nearing finalization, but such early site work will continue to be covered by State and Local permits.
- Risk Treatment (Section 17.3): The current LWR-focused, highly prescriptive regulatory framework has evolved from conservative deterministic roots. While familiar, their use would present some serious challenges in design, safety analysis, and licensing of the NGNP. The availability and increasing acceptance of risk-informed, performance-based methods provides an opportunity to comprehensively define design, safety, and licensing requirements within a new, modern safety framework rather than utilizing more rigid, deterministic methods. This approach

will move the PRA focus from being a special purpose tool in current practice to a main stream component of the design and licensing process.

- Regulatory Compliance (Section 17.4): To confirm the NRC review schedule and ensure that the applications will be acceptable to the NRC when submitted, an extensive pre-application review will be conducted. The pre-application review will include the generation of a Licensing Review Basis document to establish understandings on the contents of the license applications (organized according to RG 1.206 guidance), the use of topical reports and technical material from the PBMR Design Certification program, and the methods and approaches to resolve major issues. The strategy for demonstrating compliance by the NGNP with NRC regulations includes (1) the adoption of the results of the PBMR Design Certification filtering process for determining which regulations are applicable, partly applicable or not-applicable, and concurrently, identification of the needed exemptions, and (2) demonstration of compliance through design reviews, safety analyses, and the application of risk-informed, performance-based methods, much of which will be based on the PBMR Design Certification program review.
- Resolution of Technical Issues (Section 17.5): Technical issues will be addressed with the NRC to the maximum extent possible in pre-application discussions in order to prepare high-quality applications. The approach to these issues will be based on (1) resolutions reached with NRC staff during the PBMR Design Certification pre-application program and design review, (2) early agreement on NGNP-specific issues and R&D programs, and (3) other related work including collaboration with national laboratories, determination of NRC R&D requirements, and coordination with standards development groups.
- Execution (Section 17.6): In order to establish nuclear capabilities for non-electricity generation applications and achieve an efficient and effective regulatory process that not only results in a license for the NGNP, but also establishes confidence in the process for industrial commercialization, the execution of the licensing strategy should be a role model for the future. The licensing strategy elements described above will be aggressively prosecuted through (1) commitment in the NGNP conceptual design phase to an aggressive schedule for submittals to the NRC during the NGNP pre-application program, (2) establishing programs and collaborative efforts for resolution of NRC safety issues and R&D data needs, and (3) establishing a clear organization among and actions for the US DOE, the prospective NGNP Alliance, and the NGNP Vendor Team.

17.1.2 Capitalization on PBMR Pre-Application Work

One of the major premises of the NGNP licensing strategy is to capitalize on the work being done in the PBMR Design Certification Pre-Application program, as shown in the chart below. Another is that the initial fuel will be supplied by PBMR (Pty) Ltd. This premise is based on high confidence not only in the design and qualification of the fuel, but also the ability to reliably manufacture and deliver quality fuel on the schedule demanded for the NGNP.

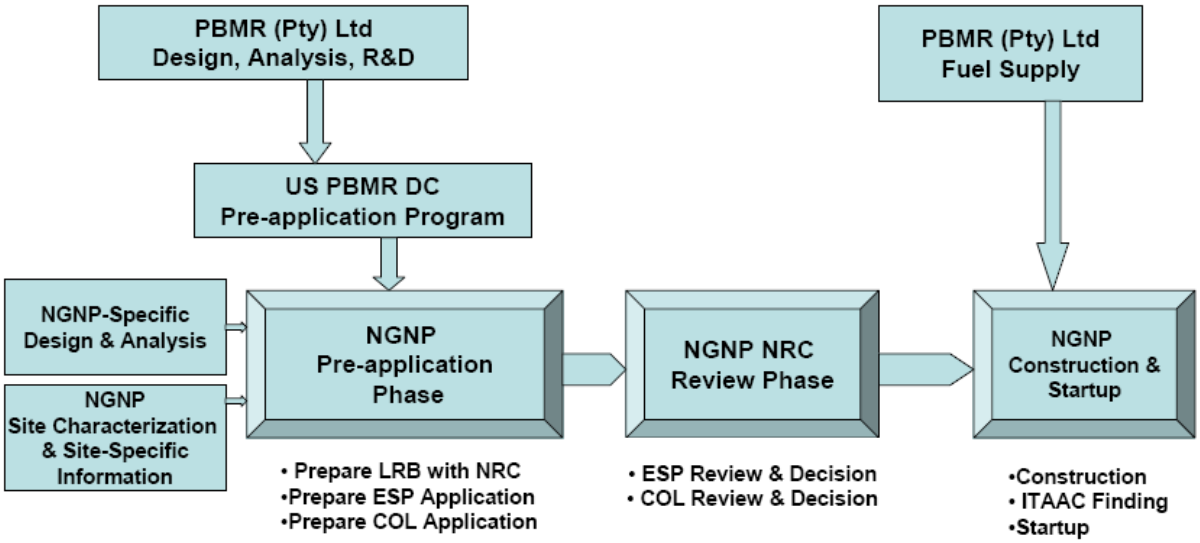

Each of the elements of the licensing strategy outlined in Section 17.1.1 above is discussed individually in the following sections.

17.2 LICENSE APPLICATION STRATEGY

17.2.1 Commercial Utilization Facility – R&D Testing

The NRC is authorized by the Atomic Energy Act to issue licenses for two classes of facilities: (1) medical therapy, research, and development and (2) industrial or commercial, as summarized in Special Study 20.6 [17-1]. As indicated in Section 20.6.1 of that study, the NGNP would be licensed as a commercial facility (i.e., as a facility licensed under Section 103 of the Atomic Energy Act) based on the expected commercial use of its output.

Notwithstanding its licensing as a commercial facility, the NGNP could be used for select R&D related testing if test data needed for a specific component or subsystem are not provided by either the PBMR (Pty) Ltd or the NGNP R&D programs. Therefore, the NGNP may be used for special testing of specific systems or components, but the plant as a whole will not be classified as a "prototype" in the licensing applications.

17.2.2 Recommended Strategy: Pre-Application + ESP + LWA + COL

The NGNP licensing strategy comprises two phases: a pre-application NGNP/NRC interaction phase and the NRC review and approval stage. The benefits of a pre-application phase are well known and are discussed in Section 17.4.1.

As discussed in Special Study 20.6 [17-1], license applications will be submitted for NRC review and approval including an Early Site Permit (ESP) application, a Limited Work Authorization (LWA) request, and a Combined License (COL) application that references the ESP.

Revisions to the regulations are being finalized ("Final Rule to Update 10 CFR Part 52" [17-26] and "Final Rulemaking on Limited Work Authorizations" [17-27]) and, therefore, the licensing strategy discussion in this report is consistent with the new regulations.

Under the new LWA regulations, authorization for early non-safety site preparation work is no longer required by the NRC since such activities were determined to be non-Federal activities and, hence, not subject to National Environmental Policy Act (NEPA) requirements. NRC authorization for early site work (i.e., an LWA) is only required for construction activities on structures, systems, and components (SSCs) that have a nexus to safety (e.g., pile driving, foundation work, concrete placement). Activities specifically excluded from the proposed

definition of construction include most[2] of the "non-safety" activities that previously required LWA-1 authorization, excavation, and fabrication of components. These early activities are no longer covered by NRC LWA regulations, but continue to be covered by State and Local permits.

For the NGNP, early "non-safety" site preparation work will be pursued under State and Local permits. Further, an LWA will be pursued for early site work on SSCs that have a nexus to safety. The LWA will enable the largest amount of early site work to be performed prior to issuance of the COL and, hence, reduce schedule risk.

17.2.3 Schedule Impact Considerations

The NGNP licensing strategy benefits from the expectation of substantial value from the PBMR Design Certification Pre-Application program, including design and analysis information, R&D results, and advance pre-application discussions with NRC staff. These benefits also provide reduced costs and shortened NRC review schedules, as reflected in schedule and cost estimates in Section 18 – Project Schedule – and Section 19 – Economic Assessments – of the PCDR report. Should these benefits not materialize or should design detail not be forthcoming according to the integrated schedule, the licensing strategy includes maintaining a fallback option for a Part 50 strategy for a two-step license following the pre-application interactions.

While the recommended licensing approach of applying for an ESP and LWA followed by a COL application is the best choice for the reasons stated in Special Study 20.6[3], it is realized that a COL application under 10 CFR Part 52 requires a higher level of design detail than a CP application under 10 CFR Part 50. As a result, submittal and review of a COL application may not be best if confirmatory R&D results impacting the critical path schedule are required by the NRC for the COL, but not for a CP, as determined through the NGNP pre-application program.

[2] For example, pile driving was not previously considered to be "construction" but would be under the proposed regulation if the piles were in support of SSCs with a nexus to safety.

[3] As stated in Section 20.6.2.4 of Special Study 20.6, the license application strategy recommendation is based on (1) enabling site work to be started as soon as possible, (2) the NRC's proposed revisions to the regulations which facilitate the use of LWAs and which allow issuance of a COL for a prototype plant, (3) the expectation that substantive reactor and safety system design detail will be available for the NGNP at the time a COL application is prepared, (4) the observation that there would be less schedule risk for the NGNP if a two-step licensing review (CP plus OL) were avoided, (5) the expectation that design information required for DC, and not available from the PBMR (Pty) Ltd program, would be developed as part of the NGNP program, (6) the realization that future detailed studies of the NGNP schedule could demonstrate the need to start construction earlier than could be supported using the COL-only licensing option, and (7) the desire to set standard application requirements and regulatory precedents for follow-on DC applications for NGNP Commercial plants.

If it were decided to exercise an alternate licensing option several licensing application submittal options exist:

- CP followed by an OL,
- ESP, followed by a CP and then an OL,
- ESP with an embedded LWA, followed by a CP and then an OL,
- ESP, followed by a LWA, a CP and then an OL, and
- LWA, followed by a CP and then by an OL.

In summary, a success oriented one-step licensing strategy is recommended with fallback options pending the success of the NGNP pre-application program.

17.2.4 NGNP Commercial Plant Linkages with the NGNP Licensing Strategy

One of the goals of the NGNP project is to establish regulatory precedents for follow-on commercial plants. In regards to the licensing strategy, such precedents include specific design requirements and policies or practices to demonstrate compliance with existing regulations. The following list identifies the links between the current licensing strategy and follow-on commercial plants.

- Obtaining a COL for the NGNP would provide a foundation for Design Certification of the follow-on commercial plants, including:
  - Establishing a precedent for treatment of the Process Heat Plant portion of NGNP,
  - Early resolution of design, safety and policy issues which fosters parallel commercial project initiatives,

- Licensing of a commercial-replicate Nuclear Heat Supply System (NHSS) for the NGNP should resolve all of the regulatory issues that would be raised during the DC process for the commercial plant, for example:
  - R&D testing performed in support of the NGNP would be applicable to the commercial plant and, therefore, the commercial plant should not have to perform prototype testing of its systems and components,
  - NRC review of NGNP fuel design and qualification, radiological source terms, and related safety analysis in support of the NGNP would be applicable to the commercial plant and, therefore, would not have to be expanded or re-reviewed,

- Implementing a risk-informed, performance-based approach for the NGNP should remove the regulatory risks for the commercial plant related to the interface issues

with the balance of plant, and

- The licensing of the NGNP will be performed in such a manner as to better support Design Certification of the commercial plant for different Process Heat Plant (PHP) applications. For example:
  - Establishing and demonstrating the methods of identifying interactions between the PHP and the NHSS,
  - Selecting the design features such as separation distance and system isolation adequate to meet safety requirements, and
  - Identifying the safety and licensing interface requirements (design and operation limits required by NRC) for the portions of the PHP which are outside the bounds of the design to be certified.

In summary, the above list identifies decisions and actions that will be made in support of the commercial plant as the licensing strategy is implemented for the NGNP.

17.3 RISK TREATMENT STRATEGY

One of the key recommendations of Special Study 20.6 is:

"Build on PBMR (Pty) Ltd–NRC pre-application interactions, including risk-informed, performance-based methods."

This recommendation is made based on (1) the NRC and industry trend to incorporate risk-informed, performance-based methods into plant design, licensing, and plant operations, (2) the expanded use of risk-informed, performance based methods to resolve non-LWR safety issues in the PBMR Design Certification program, and (3) the realization that use of rigorous risk-informed, performance-based methods for non-LWR reactors is the primary means of controlling risks related to balancing design features, safety analysis, and compliance with NRC regulations that are based significantly on LWR experience.

The current LWR-focused, highly prescriptive regulatory framework has evolved from conservative deterministic roots. While familiar, their use presents some serious challenges in design, safety analysis and licensing of the NGNP. The availability and increasing acceptance of risk-informed, performance-based methods provides an opportunity to comprehensively define design, safety and licensing requirements within a new, modern safety framework, rather than utilizing more rigid, purely deterministic methods. This approach will move the PRA focus from being a special purpose tool in current practice to a main stream component of the design and licensing processes.

NGNP plant design, safety analysis, and demonstration of compliance with NRC regulations are the result of an iterative process including engineering, risk-informed performance-based analysis, and deterministic safety analysis, as described in Special Study 20.6 [17-1] and four papers submitted to NRC for their review on the PBMR Design Certification pre-application program ([17-10] through [17-13]). These four papers and the methods described in them are directly applicable to the NGNP. PRA analysis is the means of integrating deterministic engineering and safety analysis with overall plant safety and compliance with Top Level Regulatory Criteria PCDR (Section 2.2.2). Specifically, this is accomplished by using the PRA to:

- Select Licensing Basis Events and Design Basis Accidents,
- Specify the safety classification of structures, systems, and components and special treatment commensurate with safety importance, and
- Evaluate and incorporate Defense-in-Depth principles into plant design, manufacturing, construction, testing and operations.

Implementation of rigorous risk-informed, performance-based methods for NGNP is the primary means for controlling licensing risks related to design compliance with regulatory criteria. Without such rigorous methods, many design decisions would be made using conservative deterministic analyses or engineering judgment. Use of risk-informed, performance-based methods, however, provides a comprehensive, logical and consistent approach to the design and licensing processes and, thereby, provides a sound approach that avoids much of the subjective and overly conservative design and special treatment activities of the past. This approach directly responds to the NRC policy for the use of modern risk methods to both simplify plants and to better focus on issues that materially impact safety.

17.4 REGULATORY COMPLIANCE STRATEGY

This section provides an overview of the NGNP strategy for compliance with NRC regulations, which can be viewed as being accomplished in two basic stages: an NRC/NGNP planning phase called a pre-application program (Section 17.4.1) and an NRC staff review phase (Section 17.4.2). In addition, this section provides a summary of compliance with State and Local permits (Section 17.4.3).

17.4.1 Overview of NRC/NGNP Pre-Application Program

NRC regulation 10 CFR 2.101 covers the requirements and procedures for filing applications, including the opportunity for the prospective applicant to meet informally with the NRC staff before filing the application. The Advisory Committee on Reactor Safeguards and the NRC staff have recently indicated the importance of establishing understandings with the NRC prior to submittal of license application and the importance of pre-application meetings ([17-14] and [17-16]).

17.4.1.1 Objectives and Scope

The three basic objectives of the NGNP pre-application program are to (1) develop plans for preparation of the ESP, LWA and COL license applications in order to ensure that, when the applications are prepared, they will be acceptable for docketing, (2) ensure there is a clear path to successful review and approval of the applications, including resolution of policy issues, technical/safety issues, and those issues identified in Regulatory Guide 1.206, Section C.IV.7 [17-18], and (3) help prepare the NRC staff for its detailed review of this advanced technology.

NGNP pre-application meetings and communications with the NRC will cover a wide range of activities including review schedules; documentation and communications; interactions with and applicability of information from the PBMR Design Certification program (including the filtering process for determining which regulations are applicable, partly applicable or not-applicable, and concurrently, identification of the needed exemptions); the format and content of the ESP, LWA and COL applications; and the approach to regulatory compliance and resolution of technical and policy issues including supporting links to the issues in the PBMR program. The understandings reached with NRC staff during the pre-application period and supporting information will be documented in a Licensing Review Basis document.

17.4.1.2 Licensing Review Basis Document

The basic reasons for developing a Licensing Review Basis (LRB) are to resolve and document, with NRC staff prior to the formal NRC review phase, issues judged to be pertinent to the NGNP license applications, including:

- Agreement on the application process to be used and the corresponding review schedule,
- Outline the contents of the ESP, LWA and COL applications, including lessons learned from recent and ongoing LWR experience,
- Leverage the results from the PBMR Design Certification program to the benefit of NGNP licensing,
- Establish the approaches to resolving NGNP-specific safety issues, and
- Establish the content and schedule for the related R&D programs.

The LRB will be developed by the NGNP Team (Vendor, INL, Public/Private Partnership, etc.) with input from the NRC staff and will serve to guide at least the initial stages of NRC staff review[4]. The concept of developing an LRB document to support NRC staff review of a license application dates back to at least the early 1990s, where they were developed to support the review of Advanced LWR applications for Design Certification [17-2]. The need for common understandings with the NRC staff in regards to expectations for applications was identified as one of the "lessons learned" from recent reviews of ESPs [17-14]. In short, an LRB is a document written in order to focus pre-application discussions on plans for preparing acceptable license applications, the level of detail expected and the methods by which unique technical and policy issues will be resolved during the actual NRC review. An LRB can also address any other issues that the applicant and NRC staff deem helpful to a successful review.

For the NGNP, information for the LRB will include:

- Administrative issues:
  - Identification of the specific license applications to be submitted (e.g., ESP, LWA, COL as discussed in Section 17.2.2), outlines of their content following the guidance of RG 1.206 and the schedule for their review,
  - Communication and documentation, including electronic submittals,
- ESP environmental and site issues,
- Limited Work Authorization issues,

[4] The experience of the early 1990s Design Certification programs showed that the LRBs were useful during the early stages of the NRC staff review. Thereafter, the staff started developing its own schedules and technical position statements in the form of SECY reports, thus eliminating the need for the LRBs in those programs.

- Other COL issues:
  - Top Level Regulatory Criteria (PCDR Section 2.2.2), including risk-informed, performance based design and licensing methods,
  - Information and documents from the PBMR Design Certification program that are applicable to NGNP[5]:
    - topical reports,
    - technical resolutions,
    - related R&D results,
    - identification of which regulations are applicable, partly applicable or not-applicable, and the needed exemptions,
  - NGNP-specific safety issue resolutions, and
  - NRC or INL R&D needs, including fuel qualification for the higher temperatures expected for the NGNP relative to the PBMR for which Design Certification is being pursued.

Administrative issues are important because a clear understanding of them will enable realistic planning for labor and budget resources and will, therefore, minimize schedule risk. Communication and documentation methods (including electronic methods), will be discussed during the pre-application review and summarized in the LRB. The experience from LWR ESP and COL reviews will be factored into these methods. In addition, the NGNP Team will identify personnel for communications on detailed technical review issues in a manner that facilitates efficient NRC staff review. For example, design organizations may be organized according to functional groups (e.g., system design) whereas the NRC staff review (e.g., following the Standard Review Plan) is organized according to specific chapters, each of which can cross-cut a number of plant systems. In this situation, it has proven to be efficient to identify a single technical lead, or "chapter-champion,[6]" in the design organization(s) to coordinate NRC review of all matters in a particular chapter of the Standard Review Plan.

As indicated in section 17.1.2, the NGNP licensing strategy will leverage the results of the PBMR Design Certification pre-application program. This program includes a large number of design descriptions, analysis methods, and supporting topical reports suitable for inclusion in the NGNP Safety Analysis Report. In addition, it is expected that (1) a large fraction of the safety issues for the NGNP Nuclear Heat Supply System will be resolved by the NRC review of the same issues in the PBMR Design Certification program, and (2) most PBMR R&D results

[5] See section 17.5 for a discussion on resolution of technical issues, which includes significant use of documents and information developed by PBMR (Pty) Ltd for the Design Certification program.

[6] The chapter-champion concept was developed during the early 1990s design certification of evolutionary advanced light water reactors when it was realized that efficiencies could be gained by assigning a chapter champion to facilitate communications with the NRC counterpart for each specific chapter of the application. This means that a single person within the applicant's organization would be responsible for coordinating all review matters within the specific chapter, regardless of the functional discipline.

will be applicable to NGNP.

The details of the proposed resolutions of all such issues for NGNP will be presented in the ESP and COL license applications and NRC approval of those specific issues will occur during the corresponding NRC review. The contents of the NGNP license applications and their review are discussed in the following sections.

17.4.2 Overview of NGNP Applications to the NRC

This section summarizes the basic elements of the NGNP license applications. All material relevant to the regulatory review of the NGNP will be provided in the license applications (subsection 17.4.2.1) or in referenced topical reports and other technical documents. The NRC regulations, policies, and guidance to be met are summarized in subsection 17.4.2.2.

17.4.2.1 License Application Contents

17.4.2.1.1 ESP Application

The contents of an ESP application are described in 10 CFR Part 52, Section 52.17 and are summarized as follows:

- A site safety analysis report, including:
  - Site description, site boundaries, any egress limitations, and location of facilities,
  - Seismic, meteorological, hydrological, hydro-geological, and geological characteristics,
  - Number, type, and thermal power level of facilities, their cooling systems, and anticipated radiological and thermal effluents,
  - Site safety assessment, including an evaluation of the major structures, systems, and components that bear significantly on site acceptability,
  - Quality Assurance program for future site-related activities,
  - Nearby industrial facilities and projected population profiles,
  - Emergency planning information (some of which is optional), and
- An environmental report per 10 CFR Part 51.

In addition, under the new regulation 10 CFR Part 51 [17-27], the ESP application may contain or be followed by a request for an LWA, including a description of the early work to be performed and the corresponding site redress plan.

The details of the contents of the ESP and LWA applications will determined based on discussions with DOE and will be further discussed with NRC staff during the NGNP pre-application phase, factoring in guidance such as NUREG-1555 [17-19], Review Standard Change Notice #RS002 [17-20], Regulatory Guide 4.2 [17-21], and lessons learned from recent LWR reviews, and presented in the NGNP Licensing Review Basis document.

17.4.2.1.2 COL Application

The contents of a COL application are described in 10 CFR Part 52, Section 52.79 and are summarized as follows for the NGNP case where an ESP application, but not a DC, is referenced:

- Information to demonstrate that the facility falls within the site characteristics and parameters specified in the ESP application and to resolve any other environmental issue not considered in any previous proceeding on the site,
- Demonstration that conditions specified in the ESP will be satisfied by the date of the COL,
- Emergency response plans if not completed in the ESP application, or reference to the emergency response plans in the ESP application,
- Technical information listed in 10 CFR Part 52, Section 52.79 [17-26], and
- Proposed inspections, tests, analyses, and acceptance criteria, including those for emergency planning as well as for the facility design.

As with the ESP application, the details of the contents of the COL application will be determined based on discussions within the NGNP Team and will be further discussed with NRC staff during the NGNP pre-application phase, factoring in guidance such as that in NEI Report #04-01 [17-17], Regulatory Guide 1.206 [17-18], and lessons learned from ongoing LWR experience, and presented in the NGNP Licensing Review Basis document.

17.4.2.2 Regulatory Criteria

17.4.2.2.1 Regulations

The current NRC regulations and guidance are based significantly on LWR experience. However, previous pre-application reviews of the MHTGR ([17-4], [17-5]) and Exelon's PBMR program [17-6] provide confidence that the current set of regulations, with appropriate exemptions, could be used for the licensing of NGNP. Additionally, the PBMR Design Certification program should identify the applicable regulations and guidance for the NGNP.

Special Study 20.6 outlined a two-step method to identify the regulations that would apply to the NGNP design [17-1]. The initial step would be a screening of the existing regulations for applicability and the second step would be to refine the focus of the applicable regulations using available design information and risk-informed, performance-based insights. The result of applying this filtering method would be an identification of the regulations that apply to NGNP, those that do not apply, and those that partially apply along with identification of needed exemptions. The acceptability of this proposed method will be determined with the NRC during the NGNP pre-application review period (or will have been previously determined during the review of the PBMR Design Certification application). The expected outcome would then be used to create early agreements where possible and a greater confidence that the license application will provide the proper information for an efficient and effective regulatory review. Actual compliance with the selected requirements would be demonstrated during NRC staff's technical review.

17.4.2.2.2 Policy Issues

A preliminary list of policy issues that would likely have to be addressed for NGNP was provided in Section 20.6.1.3 of the Special Study report 20.6 [17-1] – based on MHTGR experience, PBMR Design Certification experience, and SECY reports by the NRC. A condensed list of those issues is provided below. However, it is noted that specific policy issues may be either added or subtracted from the list as the NGNP program develops and proceeds through the development of the Licensing Review Basis document during the NGNP pre-application phase meetings with NRC.

- Method for integration of PRA into the design process,
  - Licensing Basis Event selection
  - Establishing the minimum level of safety for new plants and meeting the NRC expectation of enhanced safety in new plants [17-15],
  - Assessing the risk from multiple reactors at the same site [17-15],
  - Safety classification of structures, systems, and components,
  - Qualification of and quality assurance for safety-related structures, systems, and components,
  - Implementing the Defense-in-Depth principle for non-LWR designs,
- Acceptability of the NGNP Team's process for verification & validation of analytical methods and computer codes,
- Qualification of fuel from a foreign supplier,
- Control room design and staffing for an expandable modular plant,
- Licensing jurisdiction and criteria for a hydrogen production plant joined with a

nuclear heat source,
- Determination as to whether core melt or equivalent severe accident must be assumed for the purpose of determining/assessing the adequacy of mitigation measures,
- Containment vs. confinement,
- The method for improvement of plant physical security though design of plant layout, structures, systems and components [17-22],
- Method for implementing Emergency Planning ITAAC for a non-LWR ([17-17], [17-23]), and
- Resolution of legal and financial issues associated with licensing new nuclear power plants [17-24].

17.4.2.2.3 Standard Review Plans, Regulatory Guides, and Other Guidance

During the PBMR Design Certification pre-application review program, sources of NRC review guidance for LWRs will be screened and reviewed for applicability to the PBMR. This work will be applicable to the NGNP. Since the NGNP license applications will include site issues in addition to design issues, additional guidance will have to be reviewed for applicability. The following is an initial list of guidance sources for the NGNP:

- US NRC Standard Review Plan for Review of Safety Analysis Reports for Nuclear Power Plants (NUREG-0800), updated as of 2007 [17-23],
- US NRC Environmental Standard Review Plan (NUREG-1555),
- NRR Review Standard #RS-002, “Processing Applications for Early Site Permits,
- Regulatory Guides, including:
  - Power Reactors (Division 1),
  - Environmental and Siting (Division 4),
  - Materials and Plant Protection (Division 5),
- ITAAC Implementation Guidance
  - Section C.III.7 of Regulatory Guide 1.206 [17-18],
  - Closure of ITAAC per SECY-07-0047 [17-25],
- Unresolved and Generic Safety Issues (NUREG-0933), and
- Nuclear Energy Institute “Industry Guideline for Combined License Applicants” [17-17].

The results of the review of the above guidance will be reflected, as appropriate, in the Licensing Review Basis document developed during the NGNP pre-application phase and in the ESP, LWA and COL applications.

17.4.3 Overview of State and Local Permit Strategy

Special Study 20.6 [17-1] concluded that "EPA, State, and Local permitting are not expected to present any significant licensing impediment for the NGNP." This conclusion remains valid.

Subsequent to Special Study 20.6, the INL "site selection" report for the New Production Reactor (NPR) [17-7] was reviewed. That report provides information which will be useful in the preparation of NGNP environmental permits. For example, the site envelope information in that report appears to be applicable to National Environmental Policy Act (NEPA) requirements.

State and Local permitting "open issues" in Special Study 20.6 were subsequently discussed with INL personnel and the NGNP Environmental Permitting Plan was revised accordingly [17-8]. While not changing the conclusion stated above, the following points of interest were learned:

- The Environmental Protection Agency still has jurisdiction over National Emission Standards for Hazardous Air Pollutants and National Pollutant Discharge Elimination System (NPDES) standards,
- The Idaho Department of Environmental Quality has not granted any permitting authority to INL,
- There is no INL site-wide NPDES Permit,
- There is no INL site-wide Spill Prevention Control and Countermeasures Plan,
- The NGNP will need its own wastewater treatment facility since NGNP cannot be tied into an INL wastewater system,
- The NGNP will need its own wells for domestic water since NGNP cannot be tied into an INL domestic water system,
- There are no wetlands on the NPR site,
- The area is an "attainment" area for air quality so Prevention of Significant Deterioration and non-attainment area New Source Review requirements do not apply to the NGNP project,
- Groundwater is more than 450 feet below the surface, and
- INL waste management infrastructure will be available for all generated waste forms.

The above points, the NPR site selection report [17-7], and the NGNP Environmental Permitting Plan [17-8] will be utilized in the development of the NGNP state and local permits. A detailed planning effort for preparation of environmental permitting applications will be conducted during the NGNP conceptual design phase.

17.5 TECHNICAL ISSUES STRATEGY

The three basic parts of the technical issues strategy are:

- Establish a technical issues agenda with the NRC staff, using the PBMR Design Certification program as a starting point and adding NGNP-unique issues,
- Submit specific topical reports, analyses, and/or position papers during the NGNP pre-application phase to reach agreement with the NRC on the approach and criteria for resolution of issues that have no precedent and gain NRC approval of topical reports on analytical codes that are necessary to complete the various analyses that must be in the COL, and
- Collaborate with industry in resolving NGNP generic issues that require consensus codes and standards and have common data needs.

The above strategy elements are discussed in the following subsections.

17.5.1 Technical Issues Agenda with NRC Staff

The establishment, during the NGNP pre-application phase, of an agreed upon agenda (list) of technical issues to be resolved or for which the approach will be confirmed during the pre-application phase prior to the NGNP COL review phase is critical to maintaining the NGNP licensing schedule. The development of this technical agenda will benefit significantly from PBMR Design Certification program discussions on the approach to safety, related technical issues, and the review of corresponding papers and topical reports. Primarily as the result of this PBMR work, most of the issues related to the pebble-bed reactor technology will be well advanced. Therefore, the NGNP COL review schedule is estimated to take only about 36 months. As discussed in Section 17.4.1.2, it is expected that the development of the NGNP Licensing Review Basis document will be the primary means by which the technical issues agenda will be established and documented during the NGNP pre-application phase.

17.5.2 PBMR Design Certification Program Synergy

The PBMR Design Certification program will be the starting point for resolution of the same or corresponding issue on the NGNP project. During the pre-application phase of the PBMR Design Certification program, topical reports, analyses, and/or position papers will be submitted and discussed with NRC staff to obtain a good mutual understanding of the issue, the related design background, and the approach to resolution. During the NGNP pre-application

phase, a mutual understanding will be established in regards to (1) the applicability of the PBMR topical reports, analyses, and position papers to the NGNP project, and (2) any adjustments to those materials that might be needed to address NGNP-specific characteristics. The following is a list of the major technical issues to be discussed with the NRC staff during the PBMR Design Certification pre-application phase[7]:

- Implementation of PRA and risk-informed, performance based methods,
  - PRA approach,
  - Selection of Licensing Basis Events,
  - Implementation of Defense-in-Depth,
  - Classification of structures, systems and components,
- Material qualification (e.g., graphite, ceramic and metallic components) and corresponding codes and standards,
- Fuel design and qualification,
  - Fuel performance and qualification testing,
  - Fuel manufacturing quality control,
- Verification and validation of evaluation models including the mechanistic radiological source term,
- Multi-module plant vs. single module certification, and
- Designing for plant security

The NGNP program will benefit from the precedents set in the PBMR Design Certification pre-application program (e.g., the submittal and review of papers during the pre-application phase ([17-10] through [17-13]) for the approach to identifying, reviewing, and resolving technical issues and from NRC review of the PBMR Design Certification application. However, due to the differences between the PBMR and NGNP designs, it is recognized that the NGNP Project will require additional effort (e.g., design, analysis, R&D) to address NGNP-specific licensing issues such as higher power and higher helium temperatures, separation of circulating helium from the Process Heat Plant via an Intermediate Heat Transfer Loop and new industrial hazards issues associated with collocation of nuclear and process heat plants for hydrogen generation.

[7] It is recognized that, in addition to the listed issues, other issues will be discussed with the NRC during the PBMR pre-application phase or during the Design Certification review.

17.5.3 Industry Collaboration

Additional benefit will be gained for the NGNP program through collaboration with industry and government entities in resolving generic issues applicable to the NGNP program. The most cost-efficient and timely manner of resolving NGNP issues is the establishment of collaborative programs with industry and government organizations and, in some cases, with NRC, where there is mutual need for design information, codes and standards, and/or related R&D information. Such collaborative efforts could include:

- Cooperation with the PBMR Design Certification program:
  - Use of design documents for the PBMR Demonstration Power Plant (DPP),
  - Use of DPP R&D results,
  - Use of Evaluation Model verification and validation results,
  - Use of component qualification (including I&C) data,
  - Approach to resolution of NRC safety issues,
- Coordination with NRC-sponsored R&D programs:
  - Refinement of current Phenomena Identification and Ranking Tables (PIRTs) for gas reactors,
  - Development of a matrix that identifies R&D needs for NGNP, the means or facilities to provide the needed data, and the basis for any independent NRC-sponsored R&D programs
- Cooperation with ASME and ANS working groups to ensure that standards are being developed to address gas reactors that cover NGNP operating conditions,
- Cooperation with DOE/INL and others, including NRC oversight, on a fuel design and qualification program to address:
  - Higher NGNP fuel temperatures,
  - Advanced fuel designs desired for NGNP commercial plant operation,
  - Verification and validation of fuel performance analytical models,
  - Verification and validation of mechanistic source term analytical models,
- Coordination with Nuclear Energy Institute programs:
  - COL application initiative,
  - PRA risk-informed, performance-based initiative, and
  - Plant security initiatives,
- Collaboration with Generation IV (Gen-IV) International Forum program on Very-High Temperature Reactor development to address:
  - Qualification of the high-temperature heat exchanger materials and design codes,
  - Qualification of graphite and other core ceramic materials,
- Establishment of bi-lateral or multi-lateral cooperative arrangements:
  - Component R&D (e.g., the Intermediate Heat Exchanger),

  - Separate Effects Test facilities development or use,
- Collaboration with Global Nuclear Energy Partnership (GNEP) initiatives:
  - Recycled fuel use,
  - Deep burn fuel cycles
  - Small reactor deployment, and
  - Fuel supply assurance.

It is recommended that detailed planning for collaboration with the above programs be established during the NGNP conceptual design stage.

17.6 EXECUTION STRATEGY

The NGNP licensing strategy will be executed jointly by the prospective NGNP Public/Private Partnership between DOE and the NGNP Alliance, and the NGNP Vendor Team. The actions that are critical to a timely and cost-effective execution of the licensing strategy are:

- Commit to a firm pre-application submittal schedule in the NGNP conceptual design phase to resolve or refine issues before the ESP, LWA and COL applications are written,
- During the NGNP conceptual design phase, establish the prospective NGNP Alliance and Partnership and an Oversight Board comprising management personnel from the DOE, the Alliance, and the NGNP Vendor Team member companies, to ensure a balanced approach to licensing matters, including design, schedule, and funding issues,
- Establish a task force within the NGNP Team to oversee the collection of site characterization data in support of the Early Site Permit application,
- Establish a collaborative NGNP pre-application program and accelerate generic items through NRC,
- Participate in and fund the related ANS and ASME codes and standards development efforts,
- Establish collaborative programs between the PBMR-based team, DOE/INL and others for specific NGNP R&D needs, e.g., graphite qualification, pebble flow model separate effects, high temperature helium loop component qualification, etc., and
- Establish and commit to specific Gen-IV and GNEP programs for projects that are essential to NGNP success and can be completed inside the schedule.

An aggressive execution of the NGNP licensing strategy as summarized above will ensure that the NGNP licensing schedule is met.

17.7 COMPLEXITY, RISKS, AND FUTURE STUDIES

17.7.1 Complexities and Risks

Licensing the NGNP will present a set of unique challenges:

- Licensing a non-LWR with only limited precedents and experienced resources,
- Licensing a passively safe plant that puts considerable emphasis on event prevention over mitigation,
- Coupling a nuclear reactor with a chemical processing plant, and
- Defining the management structure between the NGNP Alliance, Partnership and Vendor Team to perform efficiently.

These challenges make the licensing process more complex and present risks to the corresponding schedule and costs. The NGNP licensing strategy is robust because it anticipates such challenges and addresses them through a combination of detailed planning, extensive pre-application NRC engagement, collaboration with PBMR (Pty) Ltd. on generic issues, coordination with supporting industry organizations' efforts, and aggressive internal execution.

The organization and conduct of the NRC review is a significant challenge for the NGNP licensing program, considering especially the need to clearly define the appropriate regulatory criteria for a non-LWR design. This risk will be addressed by documenting, during the NGNP pre-application phase, understandings with the NRC staff in a Licensing Review Basis document and then pro-actively managing its implementation during the NRC staff review phase to maintain a mutually agreed schedule that is supported by adequate resources as required by the work plan.

Another significant complexity is the need to identify and coordinate a number of R&D programs run by several organizations such as PBMR (Pty) Ltd, the NGNP program, national laboratories, and the NRC. This risk will be managed by detailed planning and execution as the NGNP program is implemented.

In developing the licensing strategy, it is understood that some material for the NGNP will come from foreign sources (e.g., fuel, graphite, and other components) and that corresponding regulatory issues related to design, quality control, and inspections will be addressed during both the pre-application phase and COL review phase. Current LWR experience indicates that the supply of components will not have special difficulties; however, the supply of fuel for a new design and graphite from foreign sources presents some new issues with limited precedents. Such issues will be addressed by leveraging experience from the PBMR

Design Certification program, collaboration with industry groups, and pro-active interaction with NRC staff regarding the level of oversight required for a fuel manufacturing plant for this plant type.

Unanticipated public intervention on either the NGNP ESP, LWA or COL applications will require additional resources and could delay the project. Such intervention will be addressed though increased technical and regulatory counsel support capable of achieving aggressive turnaround schedules for public issues. Additionally, a proactive public outreach program is advantageous for any new reactor project to assure balanced local public views are obtained.

The above risks will be managed jointly by the NGNP Team working closely with NRC staff and management.

17.7.2 Future Studies

Early planning is one of the major tools for mitigating the risks identified above. Therefore, it is recommended that the following activities be conducted during the conceptual design stage of the NGNP program:

- Establish the NGNP project schedule with DOE and NRC,
- Prepare an annotated outline of an NGNP Licensing Review Basis document, including:
  - Contents of the ESP, LWA and COL applications, including lessons learned from LWR ESP and COL experience,
  - Interactions with and leveraging of the PBMR Design Certification program for resolution of safety issues and results of the filtering process for determining which regulations are applicable, partly applicable or not-applicable, and the needed exemptions
  - The approach to resolution of safety issues unique to NGNP, and
  - The definition of and approach to resolution of existing and new policy issues,
- Establish NRC R&D needs in view of the PBMR R&D program, the PBMR fuel qualification program, the PBMR V&V program, and the NGNP R&D program. Also, establish the corresponding relationship to Gen-IV and national laboratory R&D programs, and tie these requirements into a refined NGNP project schedule, and obtain agreement on common objectives, schedules and cost-sharing, and
- Prepare a detailed plan for the generation of environmental permitting applications.

REFERENCES

[17-1] "NGNP and Hydrogen Production Pre-conceptual Design Report – Special Study 20.6: NGNP Licensing and Permitting Study," Revision 0, dated January 2007.

[17-2] Development of Licensing Review Basis for New Plant Designs, SECY-90-0362, dated October 24, 1990.

[17-3] "Pre-application Safety Evaluation Report for the Modular High-Temperature Gas-Cooled Reactor (MHTGR)," NUREG-1338, U.S. Nuclear Regulatory Commission, July 1995.

[17-4] "Exelon Generation Company's Proposed Licensing Approach for PBMR in the United States," Exelon letter dated August 31, 2001, NRC Project No. 713.

[17-5] NRC Staff's Preliminary Findings Regarding Exelon's Proposed Licensing Approach for the PBMR, NRC letter to Exelon, dated March 26, 2002.

[17-6] Submittal of PBMR US Pre-application Review Activities Summary, Exelon letter dated July 22, 2002, NRC Project No. 713.

[17-7] Environmental and Other Evaluations of Alternatives for Siting, Construction, and Operating New Production Reactor Capacity, DOE report #DOE/NO-0014, dated September 1992.

[17-8] Idaho National Laboratory (INL) Next Generation Nuclear Plant (NGNP) Prototype Environmental Permitting Plan (EPP), report produced for INL by Westinghouse/Shaw Group, Revision 4, dated March 2007.

[17-9] NUREG-1860, "Framework for Development of a Risk-Informed, Performance-Based Alternative to 10 CFR Part 50" (Draft Working Report), July 2006.

[17-10] PBMR (Pty) Ltd, "U.S. Design Certification – Probabilistic Risk Assessment Approach for The Pebble Bed Modular Reactor," June 13, 2006 (Submitted to the U.S. Nuclear Regulatory Commission in PBMR (Pty) Ltd Letter USDC20060613-1, Dated June 13, 2006).

[17-11] PBMR (Pty) Ltd, "U.S. Design Certification – Licensing Basis Event Selection For The Pebble Bed Modular Reactor," June 30, 2006 (Submitted to the U.S. Nuclear Regulatory Commission in PBMR (Pty) Ltd Letter USDC20060703-1, Dated July 3, 2006).

[17-12] PBMR (Pty) Ltd, "U.S. Design Certification – Safety Classification Of Structures, Systems, And Components For The Pebble Bed Modular Reactor," August 24, 2006 (Submitted to the U.S. Nuclear Regulatory Commission in PBMR (Pty) Ltd Letter USDC20060828-1, Dated August 28, 2006).

[17-13] PBMR (Pty) Ltd, "U.S. Design Certification – Defense-In-Depth Approach For The Pebble Bed Modular Reactor," December 11, 2006 (Submitted to the U.S. Nuclear Regulatory Commission in PBMR (Pty) Ltd Letter USDC20061213-1, Dated December 13, 2006).

[17-14] "Lessons Learned From the Review of Early Site Permit Applications," ACRS letter #ACRSR-2213, dated September 22, 2006.
[17-15] "Report on Two Policy Issues Related to New Plant Licensing," ACRS letter #ACRSR-2149, dated September 21, 2005.
[17-16] "Pre-Application Siting Interactions for New Reactors," NRC presentation, H. Brent Clayton, dated March 27, 2007.
[17-17] "Industry Guideline for Combined License Applicants Under 10 CFR Part 52," Nuclear Energy Institute report #NEI 04-01, Revision E, dated October 5, 2005.
[17-18] "Combined License Applications for Nuclear Power Plants (LWR Edition)," Regulatory Guide 1.206 (was DG #1145), Federal Register Notice dated February 12, 2007 (Volume 72, Number 28).
[17-19] "Environmental Standard Review Plan," NUREG-1555, dated October, 1999.
[17-20] "Processing Applications for Early Site Permits," NRC Review Standard Change Notice #RS-002, ADAMS Accession No.: ML032340334.
[17-21] "Preparation of Environmental Reports for Nuclear Power Stations," Regulatory Guide 4.2, Revision 2, dated July 1976.
[17-22] "Staff Requirements – SECY-06-0204 Proposed Rulemaking - Security Assessment Requirements for New Nuclear Power Reactor Designs", Staff Requirements Memorandum dated April 24, 2007.
[17-23] "Semi-Annual Update of the Status of New Reactor Licensing Activities and Future Planning for New Reactors," SECY-07-0039, dated February 27, 2007.
[17-24] "Legal and Financial Policy Issues Associated with Licensing New Nuclear Power Plants," SECY-02-0180, dated October 7, 2002.
[17-25] "Staff Approach to Verifying the Closure of Inspections, Tests, Analyses, and Acceptance Criteria Through A Sample-Based Inspection Program," SECY-07-0047, dated March 8, 2007.
[17-26] "Staff Requirements – Affirmation Session", Summary of April 11, 2007 Meeting M070411 on the 'Final Rule to Update 10 CFR Part 52: Licenses, Certifications, and Approvals for Nuclear Power Plants, SECY-06-0220 (October 31, 2006).'
[17-27] "Staff Requirements – Affirmation Session", Summary of April 17, 2007 Meeting M070417B on Final Rulemaking on Limited Work Authorizations, SECY-07-0030 (February 7, 2007).

LIST OF ASSUMPTIONS

The key assumptions related to Licensing and Permitting are:

17.1 The PBMR Design Certification program including pre-application activities will be leveraged to reduce the time, effort and risk in establishing the regulatory approach to common or generic modular HTGR requirements.

17.2 A reliable and high quality supply of fuel will be available when needed and which will meet US NRC requirements; therefore, review of fuel manufacturing is not addressed further in this licensing strategy.

17.3 Spent fuel will be stored on-site; therefore, the licensing strategy does not include transportation of spent fuel to an off-site location (except for the normal environmental reviews associated with Tables S-3 and S-4 of NRC's regulations in 10 CFR Part 51).

17.4 The new "technology-neutral framework" rule set (i.e., the expected 10 CFR Part 53) will not be in place in time to support the NGNP license application.

17.5 The NGNP program and the licensing schedule in particular are supported by adequate resources as required by the work plan.

APPENDICES

Appendix 17A FINAL DESIGN REVIEW Presentation to BEA

Section 17
Licensing and Permitting

Stanley Ritterbusch

Preconceptual Design Report
90% Design Review

May 8-10, 2007

P B M R

Westinghouse NGNP Team

Presentation Outline

- Objective
- Licensing strategy elements
- Summary and conclusions

P B M R

Objective

- Develop a comprehensive licensing strategy, including:
  - License application approach
  - Treatment of regulatory risk
  - Regulatory compliance
  - Resolution of technical issues
  - Execution strategy
- Support an NGNP operation date of 2018

Licensing Strategy Elements

- License application approach:
  - The recommended strategy is to apply for:
    - An Early Site Permit (ESP)
    - A Combined License (COL) under 10 CFR Part 52
  - Bases:
    - Avoid design, schedule, and cost risk of using the Part 50 Construction Permit & Operating License process
    - Set licensing precedents for commercial NGNPs
  - Early site preparation work (non-safety) no longer requires NRC authorization
    - A Limited Work Authorization (LWA) from NRC is required for work on structures that have an impact on safety
    - The NGNP project schedule does not credit an LWA for conservatism, but the licensing strategy maintains an LWA as an option

Licensing Strategy Elements….

- Builds upon the ongoing PBMR Design Certification Pre-Application Program with the NRC

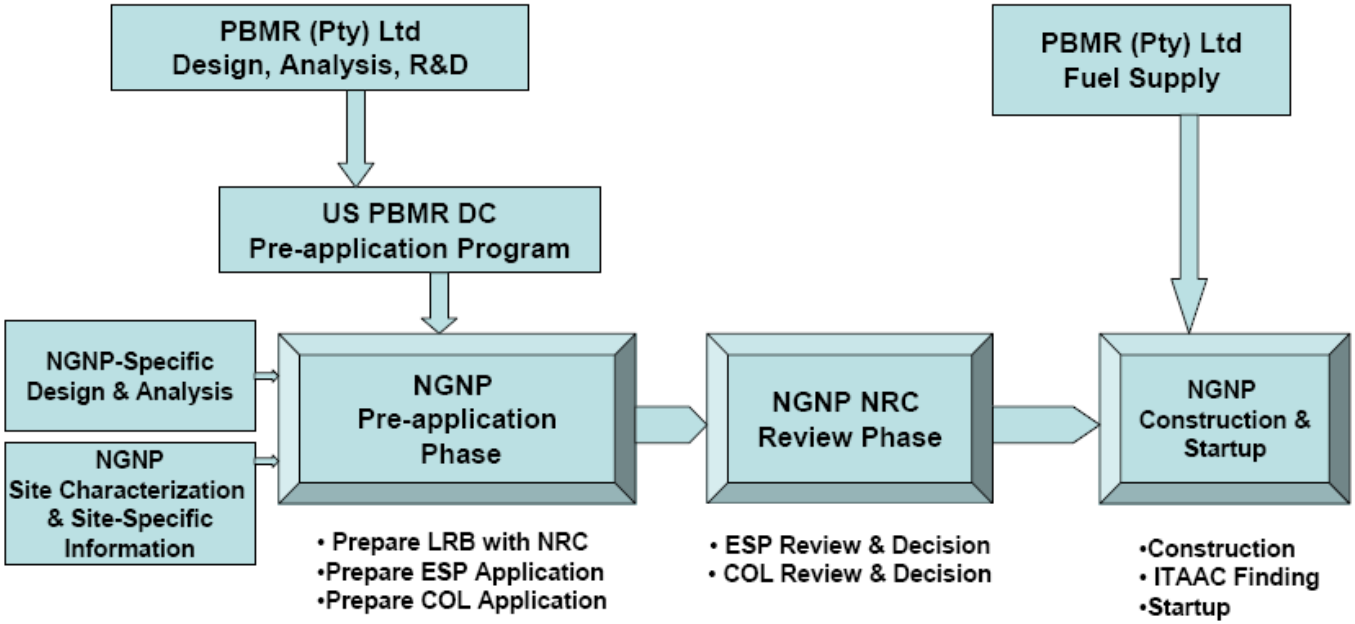

Licensing Strategy Elements….

- Licensing strategy supports an NGNP operation date of 2018

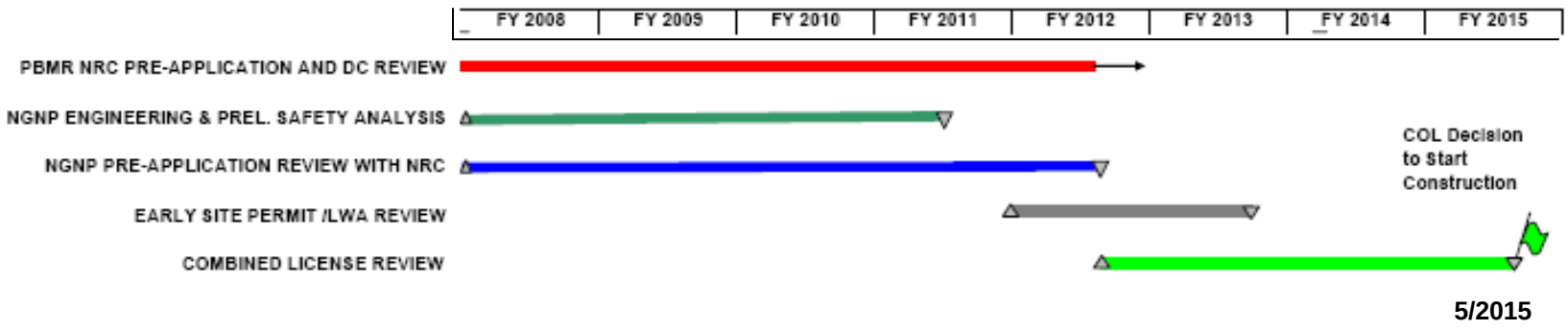

  - Pre-application phase (~56 months duration)
  - Early Site Permit (~21 months review)
  - Combined License (~36 months duration)

Licensing Strategy Elements….

- Treatment of regulatory risk:
  - Current regulatory framework has evolved from LWR experience and conservative, deterministic reviews by NRC staff
    - While familiar, their use would present some serious challenges in design, safety analysis, and licensing of the NGNP
  - NGNP applies modern risk-informed, performance-based methods comprehensively balance design, safety, and licensing requirements within a modern safety framework
    - Four papers submitted in PBMR pre-application program
    - NRC is reviewing

Licensing Strategy Elements….

- Regulatory compliance:
  - An extensive pre-application review will be conducted with NRC to:
    - Confirm the review schedule and ensure that the applications will be acceptable to the NRC when submitted,
    - Generate a Licensing Review Basis document to establish understandings on:
      - the contents of the license applications,
      - the use of topical reports and technical material from the PBMR Design Certification program, and
      - the methods and approaches to resolve major issues.
    - Prepare the license applications accordingly

Licensing Strategy Elements….

- Regulatory compliance:….
  - Demonstrating compliance with NRC regulations
    - Filtering of regulations in PBMR Design Certification program to identify:
      - Applicable regulations,
      - Partly applicable or not-applicable,
      - Needed exemptions
    - Demonstrating NGNP compliance through design reviews, safety analyses, and application of risk-informed, performance-based methods,
      - Using PBMR technical materials and resolutions, R&D results, and technical resolutions from collaborative programs.

Licensing Strategy Elements….

- Resolution of technical issues:
  - Will be addressed with the NRC in NGNP pre-application discussions based on:
    - Resolutions reached with NRC staff during the PBMR Design Certification pre-application program and design review,
    - Early identification of NGNP-specific issues and R&D programs, and
    - Industry collaboration
      - Resolution of generic technical issues
      - Determination of NRC R&D requirements
      - Coordination with standards development groups

Licensing Strategy Elements….

- Execution strategy:
  - Goal is to establish a role model for:
    - An efficient and effective regulatory process that results in a timely license for the NGNP
    - Use of nuclear reactors for non-electricity generation applications
    - Confidence in the process for NGNP commercialization.
  - The licensing strategy will be aggressively prosecuted through:
    - Commitment in the NGNP conceptual design phase to an aggressive schedule for submittals to the NRC during the NGNP pre-application program,
    - Establishing programs and collaborative efforts for resolution of NRC safety issues and R&D data needs, and
    - Establishing a clear organization among the US DOE, the prospective NGNP Alliance, and the NGNP Vendor Team and a public/private partnership to act as the Applicant

Summary and Conclusions

- Early Site Permit and Combined License applications with significant benefit from the PBMR Design Certification pre-application program
- Relies on risk-informed, performance-based methods for a balanced approach to design, safety analysis, and regulatory compliance
- Includes industry collaboration for resolution of generic technical issues
  - Input from PBMR Design Certification program
  - Coordination with NRC, national laboratories, and standards development groups
- Anticipates an effective organization among the US DOE, the prospective NGNP Alliance, and the NGNP Vendor Team and a public /private partnership to act as the Applicant

Summary and Conclusions….

- Establishes a timely precedent for Design Certification, licensing, and operation of follow-on NGNP commercial plants
- NRC approval in 2015 supports NGNP startup in 2018

NGNP-18-RPT-001 May 2007
Revision 0

NGNP and Hydrogen Production Preconceptual Design Report

SECTION 18: NGNP PROJECT SCHEDULE

Revision 0

APPROVALS

Function	Printed Name and Signature	Date
Author	Karl Goff Shaw Environmental & Infrastructure, Inc.	May 24, 2007
Reviewer	Peter Wells Shaw Environmental & Infrastructure, Inc.	May 24, 2007
Approval	Edward Brabazon Shaw Environmental & Infrastructure, Inc.	May 24, 2007

Westinghouse Electric Company LLC
Nuclear Power Plants
Post Office Box 355
Pittsburgh, PA 15230-0355

©2007 Westinghouse Electric Company LLC
All Rights Reserved

LIST OF CONTRIBUTORS

Name and Organization	Date
Ed Brabazon Shaw Environmental & Infrastructure	May, 2007
Peter Wells Shaw Environmental & Infrastructure	May, 2007
Charlie Bolthrunis Shaw Energy & Chemicals	May, 2007
Betsy Westergren Shaw Environmental & Infrastructure	May, 2007
Dan Donaghue Stone & Webster Management Consultants	May, 2007
Sten Caspersson Westinghouse Electric Company LLC	May, 2007
Stanley Ritterbusch Westinghouse Electric Company LLC	May, 2007
Dan Mears Technology Insights	May, 2007
Fred Silady Technology Insights	May, 2007
Scott Penfield Technology Insights	May, 2007
Michael Correia Pebble Bed Modular Reactor (Pty) Ltd	May, 2007

BACKGROUND INTELLECTUAL PROPERTY

Section	Title	Description
NONE		NONE

REVISION HISTORY

RECORD OF CHANGES

Revision No.	Revision Made by	Description	Date
0	Peter Wells Shaw Environmental & Infrastructure, Inc.	Initial Issue	May 24, 2007

DOCUMENT TRACEABILITY

Created to support the following Document(s)	Document Number	Revision
NGNP and Hydrogen Production Preconceptual Design Report	NGNP-01-RPT-001	0

TABLE OF CONTENTS

LIST OF TABLES **18-6**
LIST OF FIGURES **18-7**
18 NGNP PROJECT SCHEDULE **18-8**
SUMMARY AND CONCLUSIONS **18-8**
INTRODUCTION **18-13**
18.1 SCHEDULE BASES AND ASSUMPTIONS **18-21**
18.1.1 ENGINEERING/DESIGN **18-21**
18.1.1.1 Technology Development 18-22
18.1.1.1.1 Nuclear Heat Supply Facility 18-22
18.1.1.1.2 Hydrogen Production Facility 18-22
18.1.1.1.3 Power Conversion Facility 18-23
18.1.1.2 Conceptual, Preliminary, and Final Design 18-23
18.1.1.3 Acquisition Strategies 18-24
18.1.1.4 Licensing and Permitting to Construct the NGNP Facility 18-25
18.1.1.4.1 NRC Licensing 18-25
18.1.1.4.2 Environmental Permitting 18-26
18.1.2 CONSTRUCTION **18-26**
18.1.2.1 License and Permitting to Operate 18-26
18.1.2.2 Overall Site and BOP Construction 18-26
18.1.2.3 Nuclear Heat Supply Facility Construction 18-27
18.1.2.4 Hydrogen Production Facility Construction 18-27
18.1.2.5 Power Conversion Facility Construction 18-28
18.1.2.6 Mockup and Testing 18-29
18.1.2.7 Training 18-29
18.1.3 INITIAL OPERATION **18-29**
18.1.4 COMMERCIAL OPERATION **18-30**
18.2 SCHEDULE DEVELOPMENT **18-31**
18.3 SCHEDULE RESULTS, ANALYSIS AND CRITICAL PATH **18-33**
18.4 NGNP PROJECT RISKS AND APPROACH TO MITIGATION **18-37**
18.5 RECOMMENDATIONS **18-41**
18.6 CONCEPTUAL DESIGN SCHEDULE **18-42**
REFERENCES **18-44**
LIST OF ASSUMPTIONS **18-45**
APPENDICES **18-46**
APPENDIX 18A NGNP PROJECT SCHEDULE **18-46**
APPENDIX 18B NGNP PROJECT CONCEPTUAL DESIGN SCHEDULE **18-46**
APPENDIX 18C DEFINITIONS **18-47**

APPENDIX 18D FINAL DESIGN REVIEW PRESENTATION TO BEA 18-49

LIST OF TABLES

Table 18-1: DOE Project Milestones for Design 18-24
Table 18-2: Long Lead Procurement Items by NGNP Facility 18-25
Table 18-3: NGNP Project Risks and Approach to Mitigation 18-37

LIST OF FIGURES

Figure 18-1: NGNP Project Schedule & Funding Profile Summary 18-11
Figure 18-2: NGNP Conceptual Design Schedule Summary 18-12
Figure 18-3: NGNP Demonstration Project WBS – Top Levels 18-15
Figure 18-4: NGNP Demonstration WBS to Fourth Level - Owners Engineer & Design 18-16
Figure 18-5: NGNP Demonstration WBS to Fourth Level - Construct 18-17
Figure 18-6: NGNP Demonstration WBS to Fourth Level - Initial Ops & Inspection 18-18
Figure 18-7: NGNP Demonstration WBS to Fourth Level - Operate Commercially 18-19
Figure 18-8: NGNP Demonstration WBS to Fourth Level – Post Ops & DD&D 18-20
Figure 18-9: NHSF Engineering / Design, Licensing & Construction Critical Path 18-35
Figure 18-10: IHX Technology Development Critical Path 18-36
Figure 18-11: HyS Technology Development Critical Path 18-36
Figure 18-12: NGNP Conceptual Design Schedule Summary 18-43

18 NGNP PROJECT SCHEDULE

SUMMARY AND CONCLUSIONS

The Pebble Bed Modular Reactor (PBMR) Next Generation Nuclear Plant (NGNP) project schedule establishes a project road map from conceptual design, through construction and startup of the demonstration plant by the end of FY 2018. The schedule identifies various activities and key milestones. Subsequent resource loading of schedule activities provides yearly funding profiles starting at the beginning of the conceptual design in 2008, and through the anticipated plant shutdown for inspection and analysis in 2021.

In general, the activities presented in the schedule are categorized into project level activities and facility level activities. For consistency with other NGNP-related work, project level activities are identified and grouped in accordance with the Work Breakdown Structure (WBS) provided by Battelle Energy Alliance (BEA)/Idaho National Laboratory (INL). The NGNP project schedule integrates the project and facility level activities into a cohesive presentation for the execution of the project.

The schedule of activities for the Nuclear Heat Supply Facility (NHSF) has been developed with the project schedule for the PBMR Demonstration Power Plant (DPP) used as input. All NHSF activities, activity durations, and activity linking have been reviewed by Pebble Bed Modular Reactor (Pty) Ltd. and reflect NGNP project-specific issues. The development schedules for both the Intermediate Heat Exchanger (IHX) and the Hydrogen Production Facility (HPF) represent the best available logic and expectations for achieving critical development targets. The schedules for the Power Conversion Facility (PCF) and BOP facilities represent conventional scheduling experience.

The NGNP project schedule was prepared to be consistent with US Department of Energy (DOE) Order 413.3 project and budget cycle and Critical Decision (CD) points (CD-0, CD-1, CD-2, etc.). The schedule shows two sets of critical decision points for the two plant facilities that will have most significant cost and/or risk impact associated with the NGNP mission; the NHSF and the HPF. Separate CD milestones are shown for the HPF, due to the differences in schedule logic. Preliminary Design and Final Design for the HPF need to wait for technology development to occur.

The overall NGNP schedule from start to full power is 11 years in duration, with an additional 3 years of operation thereafter. At the end of 3 years of operation, there will be a one-month shutdown for inspections. A summary of the NGNP Project Schedule is shown in Figure 18-1. The schedule begins with the start of conceptual design in early October 2007. The final completion date, meaning the completion of startup & testing activities and operation of the facility at full power, is at the end of September 2018.

Licensing activities, whether application preparation activities by the NGNP Project team or NRC review activities, occur during approximately the first 7½ years. The NRC licensing process includes both an Early Site Permit (ESP)/Limited Work Authorization (LWA) and a Combined Construction Operating License (COL) application review process. The anticipated NRC review duration for each is anticipated to be 21 months and 36 months, respectively, and will occur during the latter part of the 7½ year period.

A critical path analysis of the schedule resulted in the identification of three potential critical paths:

1. NHSF engineering/design, safety analysis, licensing, and construction
2. IHX technology development
3. Hybrid Sulfur (HyS) technology development.

The first critical path results from analyzing the scheduled activities and identifying activities through precedent and antecedent links between activities. The second two potential critical paths are derived from an assessment of less tangible risks inherent in the schedule. Specifically, the uncertainties associated with the technology development of the IHX and HyS process.

The approach adopted for the NGNP Project Schedule is one that assumes a balanced risk. Invariably, any risk inherent in the schedule will have an associated risk to the project cost estimate. Therefore, mitigation of schedule risks will not only ensure timely completion of the project, but also reduce the likelihood of significant cost variances from the estimated project cost. In brief, identified risks include:

- Licensing Cost and Schedule Risks,
- Technology Development Costs and Schedule Risks,
- Project Development Costs and Schedule Risks,
- Project Experience Risks,
- Adequate Resource Risks, and
- Commercial Infrastructure Risks.

The following recommendations concerning the NGNP Project Schedule are made in order to address the risks and reduce the uncertainty in meeting the project completion date at the end of fiscal year 2018:

1. Begin implementation of the future studies and conceptual design, as soon as possible.
2. Start NGNP pre-application interactions with the NRC as soon as possible to secure the licensing strategy basis for the schedule.
3. Immediately implement the recommended technology development programs, particularly in the areas of the IHX and HyS process.

4. Begin developing the acquisition strategies and long lead procurement programs for the major equipment identified in the schedule.
5. Develop and implement risk mitigation strategies.

During the course of the preconceptual design effort, the Westinghouse NGNP Team developed more detail for conceptual design activities, as shown in Appendix 18B of this section. It should be noted that no additional analysis has been performed for the conceptual design schedule beyond identifying activities and recommended activity durations. A summary of the conceptual design schedule is shown in Figure 18-2.

The conceptual design schedule is arranged in a similar manner as the NGNP Project schedule, utilizing the BEA WBS as much as practicable. In addition to design activities, the schedule also shows programmatic activities such as program level plan and procedure development and design reviews by BEA at 35 and 90% conceptual design milestones. Other important activities shown include pre-application interactions with the NRC and the immediate start of essential technology development tasks, as recommended by the Team.

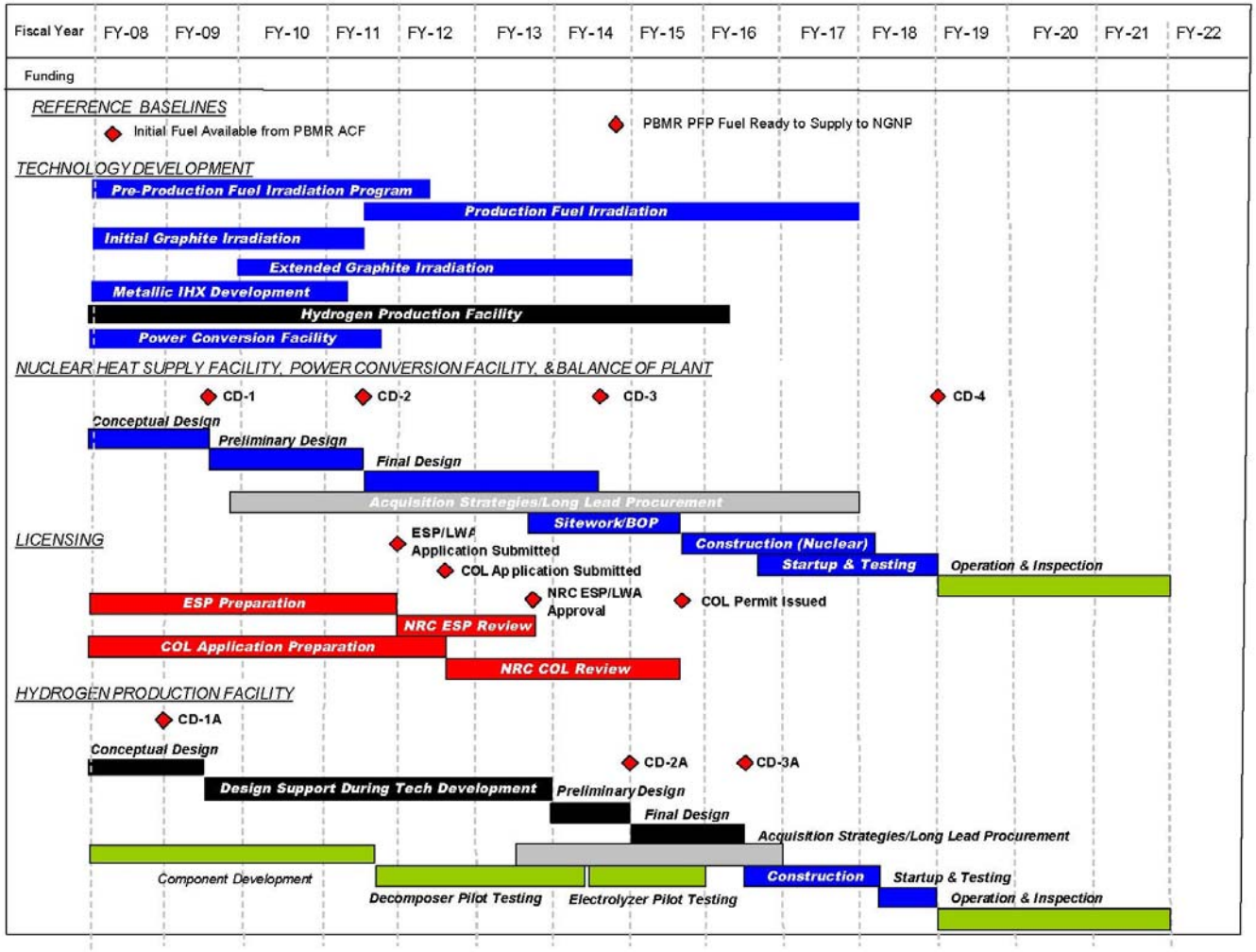

Figure 18-1: NGNP Project Schedule & Funding Profile Summary

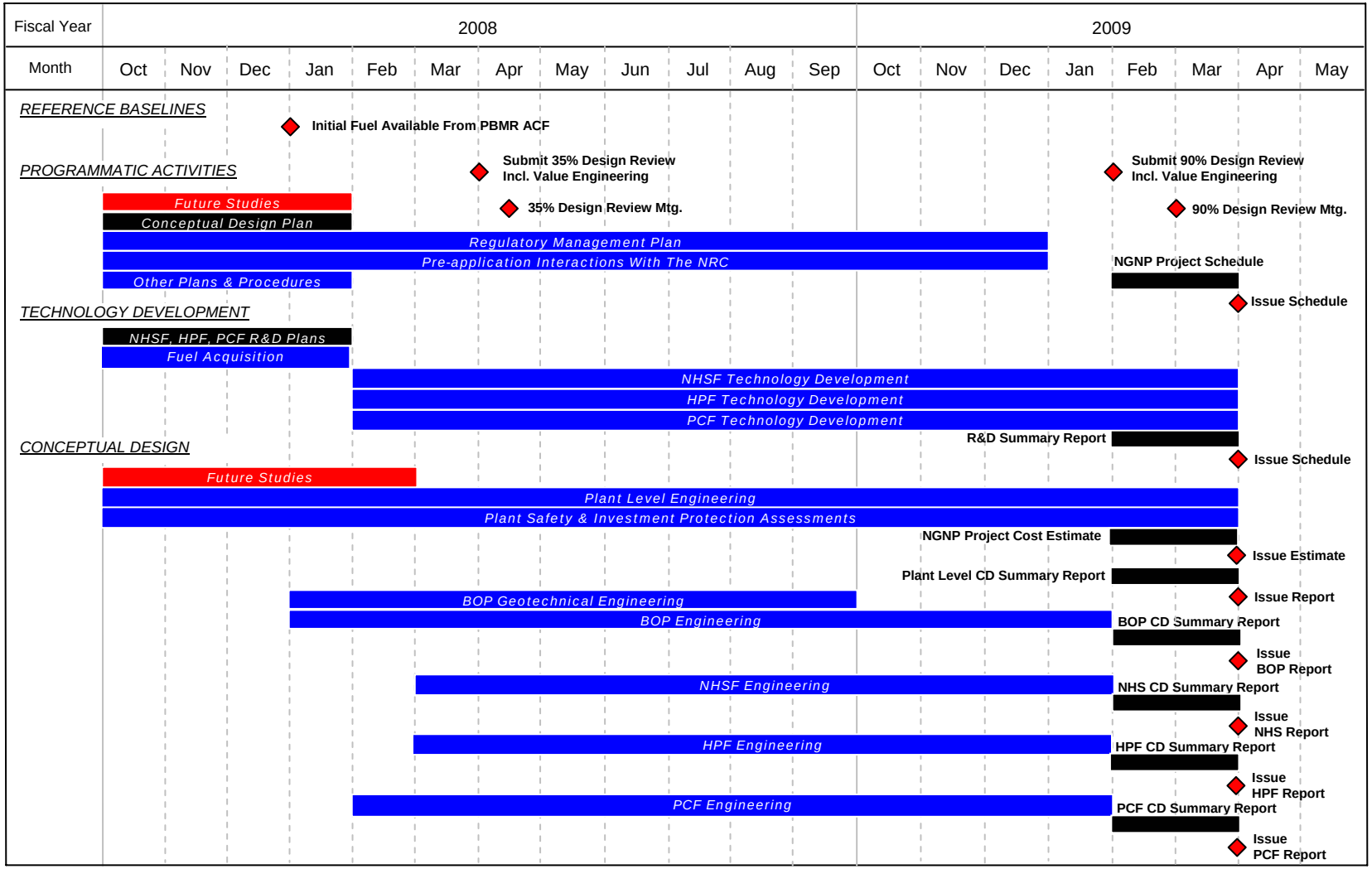

Figure 18-2: NGNP Conceptual Design Schedule Summary

INTRODUCTION

The NGNP Project schedule establishes a viable project road map from conceptual design through construction and operation of the demonstration plant by the end of FY 2018. The schedule identifies various activities and key milestones in the project to a preconceptual level. Subsequent resource loading of schedule activities provides yearly funding profiles starting at the beginning of the conceptual design in FY 2008, and continuing through the anticipated plant shutdown for inspection and analysis in FY 2021. The overall schedule development approach, basis for project activities, and subsequent schedule analysis are discussed in detail in this section.

For reference purposes, the schedule includes brief high-level summaries, or reference baselines, of other projects and their related activities that are occurring prior to the start of the NGNP Project. While not NGNP Project activities, they are inherently related to certain activities associated with the NGNP Project, and in many cases are being used as a basis for NGNP related engineering and technology development. In short, these reference baselines are outlined below:

- PBMR Demonstration Power Plant (DPP) – the NGNP Project NHSF design is based on the PBMR DPP reference design. Design changes or modifications made during the construction and operation of the PBMR DPP will undoubtedly be incorporated into the NGNP design during conceptual and preliminary engineering.
- South African Pilot Fuel Plant – Since fuel production facilities do not yet exist in the United States, the NGNP project schedule is based on utilizing fuel manufactured in and shipped from South Africa.
- PBMR Commercial Plant Pre-application Licensing – The licensing strategy for the NGNP project relies, in part, on the groundwork established by PBMR during the pre-application discussions with the NRC for Design Certification of their pebble-bed technology.

In general, the schedule activities presented in the schedule are categorized into project level activities and facility level activities. For consistency with other NGNP related work, project level activities are identified and grouped in accordance with the WBS provided by BEA/INL. Project level activities include tasks associated with the Owner's Engineer, project design, construction, initial operation and commercial operation of the NGNP Facility. On the fourth WBS level, project activities are subcategorized within the overall plant and facility level in the following manner:

- Plant Level Design and Integration,
- Nuclear Heat Supply Facility (NHSF),

- Hydrogen Production Facility (HPF),
- Power Conversion Facility (PCF), and
- Overall Site and Balance of Plant (BOP).

Figure 18-3 through Figure 18-8 shows the WBS. The WBS provides the definition of project activities and brings commonality to the activities described in the schedule and costs included in the NGNP cost estimate. The intent is that the costs included in the estimate may be directly mapped to the schedule using the WBS. Further discussion of the WBS may be found in Section 3 of this report.

The preconceptual project schedule for the NGNP demonstration plant was prepared showing the DOE Order 413.3 project and budget cycle and Critical Decision points (CD-0, CD-1, CD-2, etc.). The schedule shows two sets of critical decision points for the plant facilities that will have most significant cost and/or risk associated with the NGNP mission; the NHSF and HPF. The preconceptual NGNP project schedule is included in Appendix 18A of this section.

This schedule is resource loaded with the preconceptual cost estimates for materials costs and labor costs associated with the various summary level activities. The resource loading correlates to the NGNP cost estimate and WBS. Yearly funding profiles are prepared using this resource loaded schedule and presented in PCDR Section 19 Economic Assessments.

A more detailed schedule has been prepared for the NGNP Conceptual Design and is included as Appendix 18B.

All acronyms are defined in PCDR Appendix A.

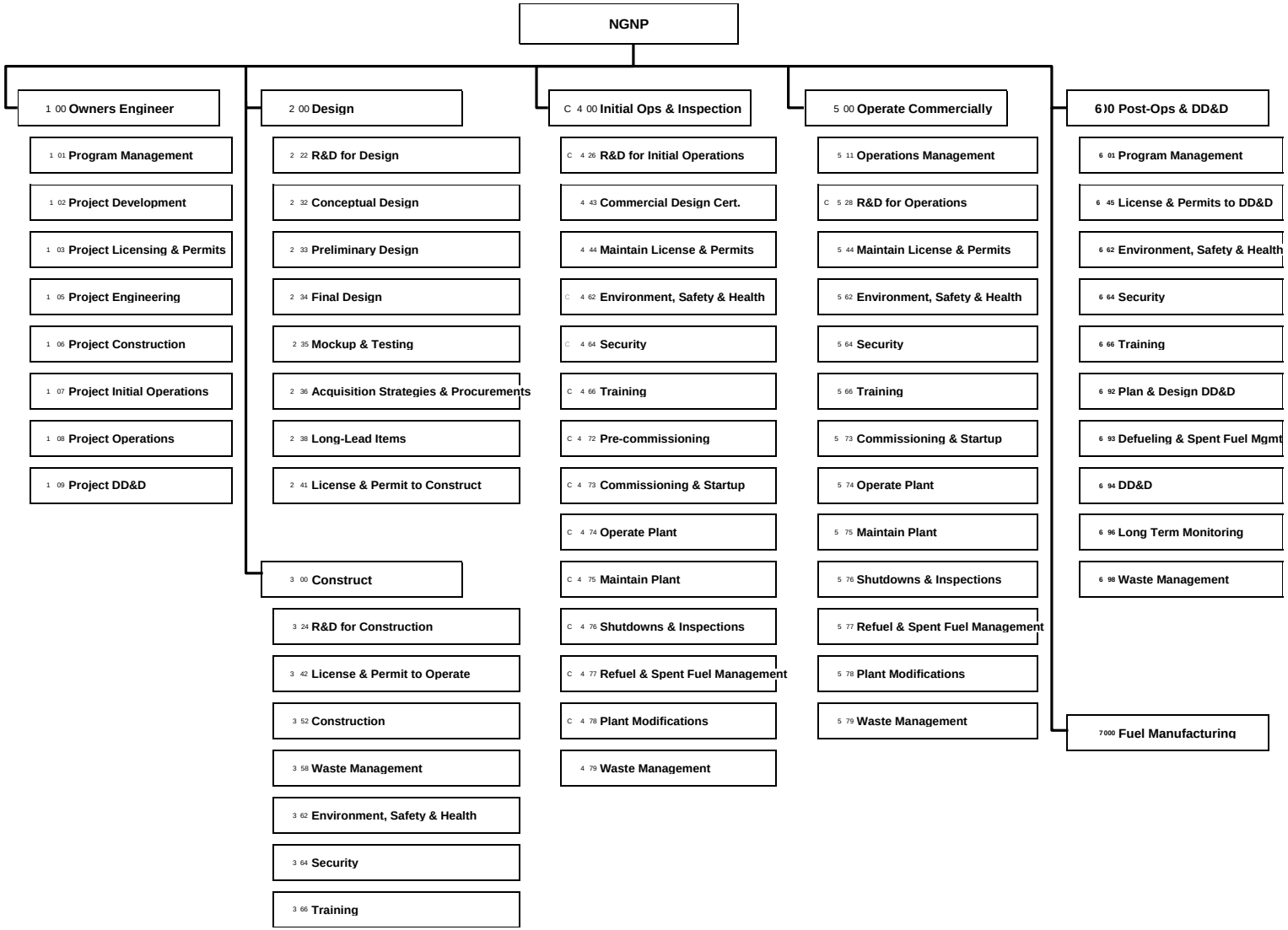

Figure 18-3: NGNP Demonstration Project WBS – Top Levels

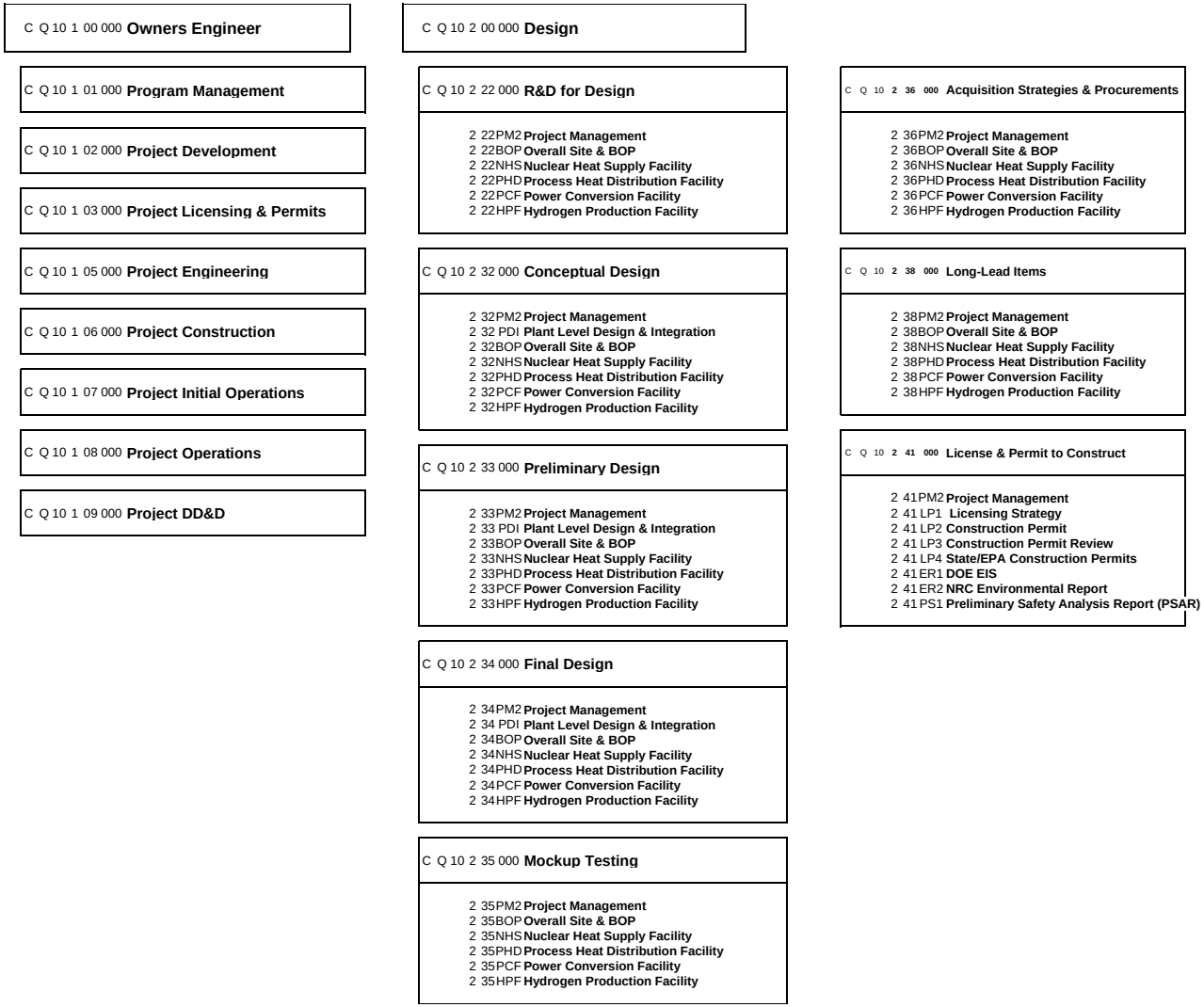

Figure 18-4: NGNP Demonstration WBS to Fourth Level - Owners Engineer & Design

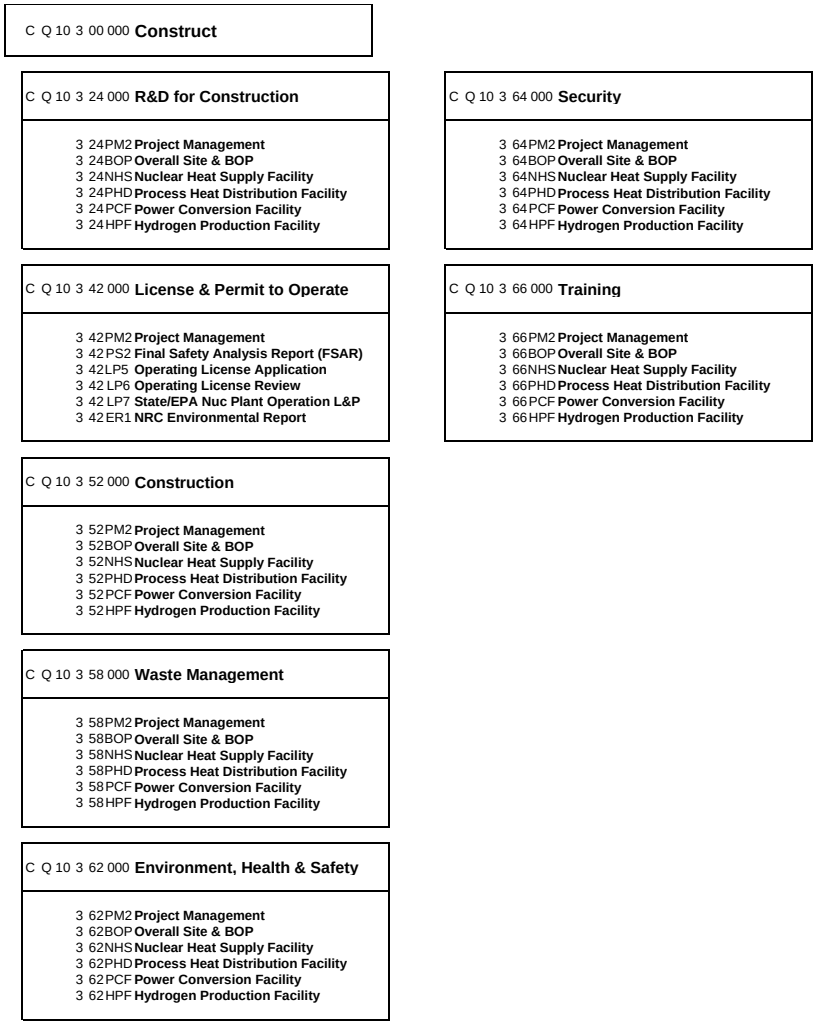

Figure 18-5: NGNP Demonstration WBS to Fourth Level - Construct

C Q 10 4 00 000 Initial Ops & Inspection

C Q 10 4 26 000 R&D for Initial Operations

- 4 26 PM2 **Project Management**
- 4 26 BOP **Overall Site & BOP**
- 4 26 NHS **Nuclear Heat Supply Facility**
- 4 26 PHD **Process Heat Distribution Facility**
- 4 26 PCF **Power Conversion Facility**
- 4 26 HPF **Hydrogen Production Facility**

C Q 10 4 43 000 Commercial Design Cert.

- 4 43 PM2 **Project Management**
- 4 43 PS2 **Final Safety Analysis Report (FSAR) Revision**
- 4 43 DC1 **Design Certification Application**
- 4 43 DC2 **Design Certification Review**

C Q 10 4 44 000 Maintain License & Permits

- 4 44 PM2 **Project Management**
- 4 44 LP8 **Maintain NRC Operating License**
- 4 44 LP9 **Maintain State/EPA Permits**
- 4 44 ER2 **Maintain EIS and Environmental Report**

C Q 10 4 62 000 Environment, Health & Safety

- 4 62 PM2 **Project Management**
- 4 62 BOP **Overall Site & BOP**
- 4 62 NHS **Nuclear Heat Supply Facility**
- 4 62 PHD **Process Heat Distribution Facility**
- 4 62 PCF **Power Conversion Facility**
- 4 62 HPF **Hydrogen Production Facility**

C Q 10 4 64 000 Security

- 4 64 PM2 **Project Management**
- 4 64 BOP **Overall Site & BOP**
- 4 64 NHS **Nuclear Heat Supply Facility**
- 4 64 PHD **Process Heat Distribution Facility**
- 4 64 PCF **Power Conversion Facility**
- 4 64 HPF **Hydrogen Production Facility**

C Q 10 4 66 000 Training

- 4 66 PM2 **Project Management**
- 4 66 BOP **Overall Site & BOP**
- 4 66 NHS **Nuclear Heat Supply Facility**
- 4 66 PHD **Process Heat Distribution Facility**
- 4 66 PCF **Power Conversion Facility**
- 4 66 HPF **Hydrogen Production Facility**

C Q 10 4 72 000 Pre-commissioning

- 4 72 PM2 **Project Management**
- 4 72 BOP **Overall Site & BOP**
- 4 72 NHS **Nuclear Heat Supply Facility**
- 4 72 PHD **Process Heat Distribution Facility**
- 4 72 PCF **Power Conversion Facility**
- 4 72 HPF **Hydrogen Production Facility**

C Q 10 4 73 000 Commissioning & Startup

- 4 73 PM2 **Project Management**
- 4 73 BOP **Overall Site & BOP**
- 4 73 NHS **Nuclear Heat Supply Facility**
- 4 73 PHD **Process Heat Distribution Facility**
- 4 73 PCF **Power Conversion Facility**
- 4 73 HPF **Hydrogen Production Facility**

C Q 10 4 74 000 Operate Plant

- 4 74 PM2 **Project Management**
- 4 74 BOP **Overall Site & BOP**
- 4 74 NHS **Nuclear Heat Supply Facility**
- 4 74 PHD **Process Heat Distribution Facility**
- 4 74 PCF **Power Conversion Facility**
- 4 74 HPF **Hydrogen Production Facility**

C Q 10 4 75 000 Maintain Plant

- 4 75 PM2 **Project Management**
- 4 75 BOP **Overall Site & BOP**
- 4 75 NHS **Nuclear Heat Supply Facility**
- 4 75 PHD **Process Heat Distribution Facility**
- 4 75 PCF **Power Conversion Facility**
- 4 75 HPF **Hydrogen Production Facility**

C Q 10 4 76 000 Shutdowns & Inspections

- 4 76 PM2 **Project Management**
- 4 76 BOP **Overall Site & BOP**
- 4 76 NHS **Nuclear Heat Supply Facility**
- 4 76 PHD **Process Heat Distribution Facility**
- 4 76 PCF **Power Conversion Facility**
- 4 76 HPF **Hydrogen Production Facility**

C Q 10 4 77 000 Refuel & Spent Fuel Management

- 4 77 PM2 **Project Management**
- 4 77 BOP **Overall Site & BOP Facilities**
- 4 77 NHS **Nuclear Heat Supply Facility**

C Q 10 4 78 000 Plant Modifications

- 4 78 PM2 **Project Management**
- 4 78 BOP **Overall Site & BOP**
- 4 78 NHS **Nuclear Heat Supply Facility**
- 4 78 PHD **Process Heat Distribution Facility**
- 4 78 PCF **Power Conversion Facility**
- 4 78 HPF **Hydrogen Production Facility**

C Q 10 4 79 000 Waste Management

- 4 79 PM2 **Project Management**
- 4 79 BOP **Overall Site & BOP**
- 4 79 NHS **Nuclear Heat Supply Facility**
- 4 79 PHD **Process Heat Distribution Facility**
- 4 79 PCF **Power Conversion Facility**
- 4 79 HPF **Hydrogen Production Facility**

Figure 18-6: NGNP Demonstration WBS to Fourth Level - Initial Ops & Inspection

C Q 10 5 00 000 Operate Commercially

C Q 10 5 11 000 Operations Management

- 5 11 PM0 **Overall Management**
- 5 11 SE1 **Systems Engineering**
- 5 11 **Plus more TBD**

C Q 10 5 28 000 R&D for Operations

- 5 28 PM2 **Project Management**
- 5 28 BOP **Overall Site & BOP**
- 5 28 NHS **Nuclear Heat Supply Facility**
- 5 28 PHD **Process Heat Distribution Facility**
- 5 28 PCF **Power Conversion Facility**
- 5 28 HPF **Hydrogen Production Facility**

C Q 10 5 44 000 Maintain License & Permits

- 5 44 PM2 **Project Management**
- 5 44 LP8 **Maintain NRC Operating License**
- 5 44 LP9 **Maintain State/EPA Permits**
- 5 44 ER2 **Maintain EIS and Environmental Report**

C Q 10 5 62 000 Environment, Health & Safety

- 5 62 PM2 **Project Management**
- 5 62 BOP **Overall Site & BOP**
- 5 62 NHS **Nuclear Heat Supply Facility**
- 5 62 PHD **Process Heat Distribution Facility**
- 5 62 PCF **Power Conversion Facility**
- 5 62 HPF **Hydrogen Production Facility**

C Q 10 5 64 000 Security

- 5 64 PM2 **Project Management**
- 5 64 BOP **Overall Site & BOP**
- 5 64 NHS **Nuclear Heat Supply Facility**
- 5 64 PHD **Process Heat Distribution Facility**
- 5 64 PCF **Power Conversion Facility**
- 5 64 HPF **Hydrogen Production Facility**

C Q 10 5 66 000 Training

- 5 66 PM2 **Project Management**
- 5 66 BOP **Overall Site & BOP**
- 5 66 NHS **Nuclear Heat Supply Facility**
- 5 66 PHD **Process Heat Distribution Facility**
- 5 66 PCF **Power Conversion Facility**
- 5 66 HPF **Hydrogen Production Facility**

C Q 10 5 73 000 Commissioning & Startup

- 5 73 PM2 **Project Management**
- 5 73 BOP **Overall Site & BOP**
- 5 73 NHS **Nuclear Heat Supply Facility**
- 5 73 PHD **Process Heat Distribution Facility**
- 5 73 PCF **Power Conversion Facility**
- 5 73 HPF **Hydrogen Production Facility**

C Q 10 5 74 000 Operate Plant

- 5 74 PM2 **Project Management**
- 5 74 BOP **Overall Site & BOP**
- 5 74 NHS **Nuclear Heat Supply Facility**
- 5 74 PHD **Process Heat Distribution Facility**
- 5 74 PCF **Power Conversion Facility**
- 5 74 HPF **Hydrogen Production Facility**

C Q 10 5 75 000 Maintain Plant

- 5 75 PM2 **Project Management**
- 5 75 BOP **Overall Site & BOP**
- 5 75 NHS **Nuclear Heat Supply Facility**
- 5 75 PHD **Process Heat Distribution Facility**
- 5 75 PCF **Power Conversion Facility**
- 5 75 HPF **Hydrogen Production Facility**

C Q 10 5 76 000 Shutdowns & Inspections

- 5 76 PM2 **Project Management**
- 5 76 BOP **Overall Site & BOP**
- 5 76 NHS **Nuclear Heat Supply Facility**
- 5 76 PHD **Process Heat Distribution Facility**
- 5 76 PCF **Power Conversion Facility**
- 5 76 HPF **Hydrogen Production Facility**

C Q 10 5 77 000 Refuel & Spent Fuel Management

- 5 77 PM2 **Project Management**
- 5 77 BOP **Overall Site & BOP Facilities**
- 5 77 NHS **Nuclear Heat Supply Facility**

C Q 10 5 78 000 Plant Modifications

- 5 78 PM2 **Project Management**
- 5 78 BOP **Overall Site & BOP**
- 5 78 NHS **Nuclear Heat Supply Facility**
- 5 78 PHD **Process Heat Distribution Facility**
- 5 78 PCF **Power Conversion Facility**
- 5 78 HPF **Hydrogen Production Facility**

C Q 10 5 79 000 Waste Management

- 5 79 PM2 **Project Management**
- 5 79 BOP **Overall Site & BOP**
- 5 79 NHS **Nuclear Heat Supply Facility**
- 5 79 PHD **Process Heat Distribution Facility**
- 5 79 PCF **Power Conversion Facility**
- 5 79 HPF **Hydrogen Production Facility**

Figure 18-7: NGNP Demonstration WBS to Fourth Level - Operate Commercially

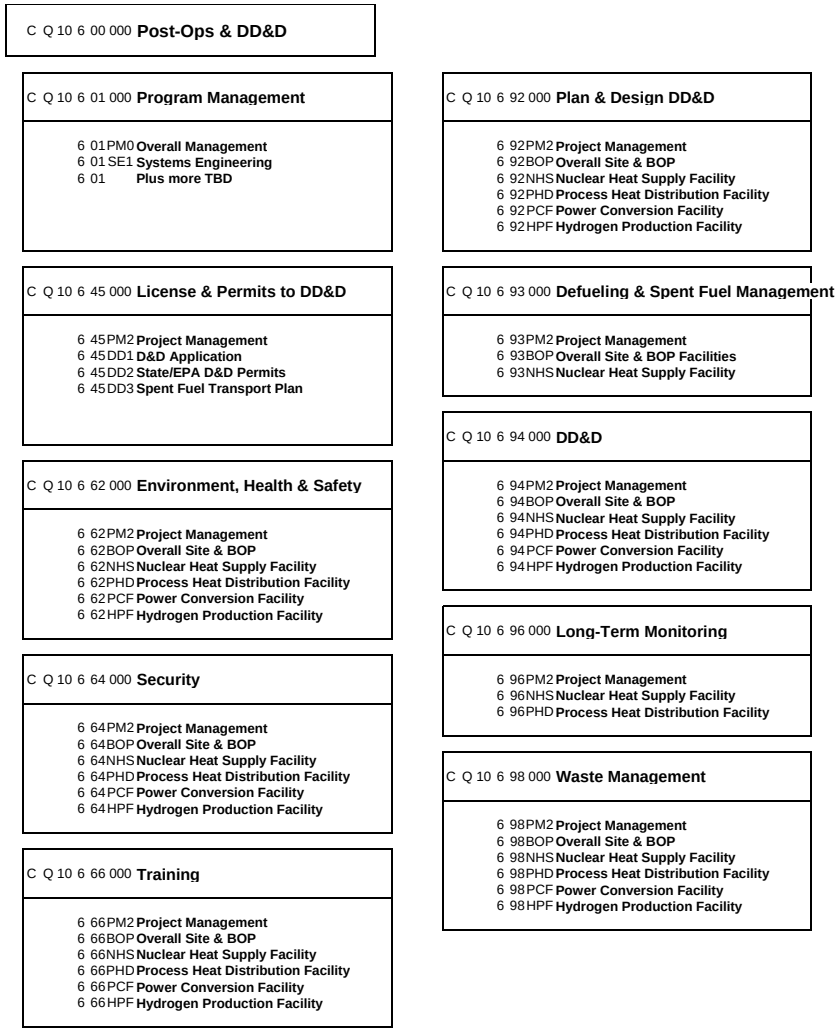

Figure 18-8: NGNP Demonstration WBS to Fourth Level – Post Ops & DD&D

18.1 SCHEDULE BASES AND ASSUMPTIONS

The NGNP Project Schedule integrates the project and facility level activities into a cohesive presentation for the execution of the Project. This section discusses the underlying rationale for why activities are included and structured as they are in the schedule. The relative importance of some activities with regard to the overall project is also presented, as applicable. All schedule activities are essentially structured using the WBS elements provided by BEA into project level activities and, on a much lower level, activities related to three facilities (i.e., NHSF, HPF and PCF) and BOP.

The schedule of activities for the Nuclear Heat Supply Facility (NHSF) has been developed with the project schedule for the PBMR Demonstration Power Plant (DPP) used as input. All NHSF activities, activity durations, and activity linking have been reviewed by PBMR (Pty) Ltd. and reflect NGNP project-specific issues. The schedule for the HPF is based on the work performed during Special Studies 20.7 and the development of Section 7. Considering the maturity of the HyS water-splitting technology selected for the hydrogen production process, HyS technology development factors significantly into the schedule, as detailed below. Separate CD milestones are shown for the HPF, due to the differences in logic, that is, Preliminary Design and Final Design need to wait for technology development to occur.

The PCF includes the electricity generation equipment, such as the steam generators, turbo machinery, air-cooled condenser and auxiliary equipment. All well proven technologies that are in extensive deployment today. Therefore, the activities and schedule are developed from related team project experience for similarly sized systems. The schedule for the PCF essentially follows that of the NHSF, with the exception of required technology development and acquisition strategies. In all other respects, design, construction, commissioning and startup of the PCF can be achieved concurrently with the NHSF schedule. The PCF shares the same CD milestones as the NHSF.

18.1.1 Engineering/Design

As shown in the WBS, the Project Level Design element includes technology development, conceptual design, preliminary design, final design, and acquisition strategies project level sub elements. Each of these sub elements is further broken down to the Plant Level Design & Integration overall plant and facility engineering and design activities level.

For the purposes of the schedule, Plant Level Design & Integration, Site and BOP engineering, and PCF and NHSF design efforts will occur concurrently, and will support the licensing application process through preliminary design as discussed in paragraph 18.1.1.2.

For the HPF, it is anticipated that the engineering and design activities will progress in a fundamentally different approach than the engineering and design activities for the other facilities due to the significant technology development that is required. Engineering during the HPF conceptual design phase will support the nuclear safety analysis and will further identify

technology development needs. The HPF engineering team will need to monitor and guide the technology development effort between conceptual and preliminary design to ensure that it is progressing accordingly. The majority of the HPF engineering and design effort will then occur during the preliminary design phase, after the completion of most of the technology development activities. Preliminary design will culminate in the development of a "front end" HPF design package.

Anticipated required technology development for each of the facilities, as well as the basis for related design activities, are described further below.

18.1.1.1 Technology Development

18.1.1.1.1 Nuclear Heat Supply Facility

Technology development for the NHSF is based on Design Data Needs (DDN)s identified during the Preconceptual design. For the most part, the required technology development for the reactor and components is minimized due to the development that has already occurred during the design of the PBMR DPP. A significant portion of the required research and development activities are associated with the Heat Transport System (HTS). As shown in the schedule, five major areas of technology development are identified:

- Reactor Fuel,
- Reactor Graphite,
- Metallic IHX,
- Ceramic IHX,
- Primary HTS High Temperature Ducts and Insulation, and
- Secondary HTS Helium Mixing Chamber.

These technology development activities are discussed in more detail in the specific R&D Plans included in Section 16 of this report.

18.1.1.1.2 Hydrogen Production Facility

As mentioned previously, significant technology development will be required for the hydrogen production process prior to the start of the preliminary design. The reference technology chosen for the HPF is the HyS Process. Current technology development for the HyS is laboratory scale and must be developed for full-scale commercial application. Development activities identified for HyS include:

- Basic Data,
- Decomposer,

- Sulfuric Acid Concentrator,
- Electrolyzer,
- Feed Purification,
- SO_2 Absorbers,
- Product Purification Testing,
- Supplementary Materials, and
- Instrumentation & Controls.

These technology development activities are discussed in more detail in the specific R&D Plans included in Section 16, and in DDN's in Section 7 of the report.

18.1.1.1.3 Power Conversion Facility

The PCF utilizes proven technologies for the steam generators and other components. However, there is some technology development anticipated for the steam generator to customize it for the project application. These activities are discussed in more detail in the specific R&D Plans included in Section 16.

18.1.1.2 Conceptual, Preliminary, and Final Design

Engineering and design work, including plant level design and integration, will occur over three project level elements of conceptual, preliminary and final design. These three design periods have been tied to the Critical Decision (CD) milestones, as shown in Table 18-1 below. During the conceptual and preliminary design periods, the facility design efforts will support the plant level safety analyses, and ultimately the NRC licensing application. In order to effectively support the licensing application, a design freeze occurs at the end of the preliminary design, thus enabling the completion of the final safety analysis and integrated safety analysis summary.

Engineering and design activities are based on the NGNP Project team's experience from past projects and similar facilities. In the case of the NHSF, task activities and engineering/design effort timelines are based directly on the PBMR DPP experience and have been modified to account for the NGNP specific requirements. For the most part, the design schedules for the NHSF, PCF and BOP occur concurrently. Design of the HPF, however, will lag the others due to the process technology development that must occur before the design can proceed to the next stage (i.e., preliminary design). During this period between HPF conceptual and preliminary design, continued engineering support would be required to review, guide and focus the technology development activities. Since the HPF design effort is not coincident with the design activities for the other facilities, a second set of CDs is shown for the HPF on the schedule.

Table 18-1: DOE Project Milestones for Design

Milestone	Occurrence
CD-1	Completion of NHSF, PCF & BOP Conceptual Design
CD-1A	Completion of HPF Conceptual Design
CD-2	Completion of NHSF, PCF & BOP Preliminary Design
CD-2A	Completion of HPF "Front End" design package
CD-3	Completion of NHSF, PCF & BOP Final Design and after receipt of NRC Early Site Permit Decision
CD-3A	After successful resolution of DOE comments on HPF "Front End", design package. Occurs during HPF final design.

More detailed information based on DOE critical decision points can be found in the Definitions subsection Section 18.

18.1.1.3 Acquisition Strategies

The acquisition strategies work element includes activities such as the development of long lead item procurement strategies, material and equipment procurement, the manufacturing of long lead items, and transportation of these items to the project site. The underlying assumption of this portion of the schedule is that an integrated vendor team will design, procure and build the facility. This team will develop acquisition strategies for all major long lead procurement items, as shown in Table 18-2. For each item, the schedule generally shows an acquisition strategy development period, followed by the ordering of material, manufacturing of the equipment, and transport and delivery of the equipment to the site.

A second aspect of acquisition strategies is the development, bid and award of contracts for the construction of the facilities. The schedule assumes that three or more main construction contracts will be awarded covering the NHSF, HPF and the remainder of the plant. The long technology development schedule associated with HPF puts it on a separate design track than the rest of the NGNP project. Therefore, it is anticipated that a separate contract will be awarded to a contractor specializing in process installations for the construction of the HPF. Within each of the main contracts, separate subcontracts are assumed to be awarded for civil, process/ mechanical, electrical and instrumentation & controls portions of the work.

Table 18-2: Long Lead Procurement Items by NGNP Facility

Facility	Long Lead Procurement Item
NHSF	Fuel Reactor Pressure Vessel Helium Pressure Boundary Core Barrel Assembly Core Structure Ceramics (Graphite) Intermediate Heat Exchanger Fuel Handling & Storage Systems Helium Services System Training Simulator
HPF	Decomposer Process Coupling Heat Exchanger (PCHX) and System
PCF	Air Cooled Condenser Turbo Machinery Steam Generator Feed Water Heaters Condensate Feed-water Pumps De-aerator
BOP	Wastewater Evaporator

18.1.1.4 Licensing and Permitting to Construct the NGNP Facility

18.1.1.4.1 NRC Licensing

NRC licensing activities are divided into two basic phases: The first is a pre-application phase that includes early discussions with the NRC and preparation of the licensing applications and the second is the NRC review phase. The license applications will cover an Early Site Permit (ESP), a Limited Work Authorization (LWA), and a Combined License (COL). The COL application necessitates the completion of integrated safety analysis, which requires significant input from the engineering and design activities during the conceptual and preliminary design phases. The final safety analysis will begin after a design freeze at the completion of the preliminary design. Preparation and submittal of the ESP and LWA applications precedes the submittal of the COL application to NRC, and has a more abbreviated NRC review schedule compared to that for the COL application. Additional discussion on the licensing strategy is provided in Section 17.

It should be noted that the schedule assumes that DOE's approval for start of construction at milestone CD-3 will be predicated on a favorable decision by the NRC on the ESP application, before the end of Final Design.

18.1.1.4.2 Environmental Permitting

The state and local permitting process will occur in two phases: permitting of the Hydrogen Production Facility, and permitting for the balance of the NGNP facility. This distinction is due to the difference between the engineering/design schedule for the Hydrogen Production Facility and the engineering/design schedule for the balance of the NGNP facility.

18.1.2 Construction

18.1.2.1 License and Permitting to Operate

During the course of construction activities, the NRC will be inspecting the work. This activity is shown under the License and Permitting to Operate WBS element. The schedule assumes that the NRC inspection will start at the pouring of the first concrete of the NHS, and be completed at the end of construction (e.g., DOE milestone CD-4).

18.1.2.2 Overall Site and BOP Construction

To ensure project completion at the end of FY 2018, site development activities will need to start immediately upon receipt of the NRC ESP Decision. A site development contractor will need to be secured prior to the issuance of the ESP for initial development of the site. Therefore, mobilization of a separate site work contractor is shown under the BOP. Thereafter, it is assumed the balance of plant system will be constructed concurrently by the PCF and BOP Contractor. Construction activities are organized as follows:

- Site preparation & foundations;
- Buildings and balance of plant;
- Process piping, equipment installation, and mechanical construction;
  - Auxiliaries;
  - Pipelines & interconnections;
- Substation & power distribution, and;
- Instrumentation and controls installation.

Construction times for the above include engineering and procurement of equipment and materials not identified as long lead procurement items. These times also allow for approximately two months per year of lost construction time due to extreme cold weather conditions during the winter. Demobilization will begin prior the completion of the electrical and I&C systems and is assumed to end six months after completion of the construction activities.

18.1.2.3 Nuclear Heat Supply Facility Construction

This portion of the schedule includes activities associated with the construction of the NHS, and shows contract lead times mobilization. For the purposes of the preconceptual schedule, it is assumed that separate contracts will be awarded for the civil/structural, process and mechanical, electrical and I&C. Construction activities are organized as follows:

- Civil – civil site work and buildings within the NHS facility;
- Process piping, equipment installation and mechanical construction;
    - Auxiliary systems
    - Reactor systems
    - Main support systems
    - Special tools and Equipment Handling Systems
    - IHX and Heat Transport System
    - Initial fills, spares and consumables
- Electrical installation;
- Instrumentation and controls installation, and;
- Demobilization.

Construction times for the above include engineering and procurement of equipment and materials not identified as long lead procurement items. These times also allow for approximately two months per year of lost construction time due to extreme cold weather conditions during the winter. The NHSF construction period is based on the construction and modularization studies performed for the PBMR Multi-module electricity generation project. Demobilization will begin prior the completion of the electrical and I&C systems and is assumed to end six months after completion of the construction activities. This demobilization period is inclusive for the BOP and PCF.

18.1.2.4 Hydrogen Production Facility Construction

Similar to the NHSF schedule, this portion of the schedule includes activities associated with the construction and contractor and subcontractor mobilization periods. For the purposes of the schedule, it is assumed that separate contracts will be awarded for the civil/structural, process and mechanical, electrical and I&C. Construction activities are organized as follows:

- Buildings and balance of plant;
- Process piping, equipment installation and mechanical construction;
    - Decomposition reactor and system
    - Electrolysis system
    - Initial fills, spares and consumables
- Electrical installation;

- Instrumentation and controls installation, and;
- Demobilization

Engineering and construction times for the above include procurement of equipment and materials not identified as long lead procurement items. These times also allow for approximately two months per year of lost construction time due to extreme cold weather conditions during the winter. Demobilization will begin prior the completion of the electrical and I&C systems and is assumed to end six months after completion of the construction activities.

18.1.2.5 Power Conversion Facility Construction

This portion of the schedule includes activities associated with the construction of the PCF. For the purposes of the schedule, it is assumed the NHSF and PCF will be constructed concurrently. Therefore, mobilization times are not shown. Construction activities are organized as follows:

- Site development;
- Buildings and structures;
- Process piping, equipment installation and mechanical construction;
  - Steam generator
  - Steam turbine generator vendor package
  - Balance of plant
  - Cooling system
- Electrical installation;
- Instrumentation and controls installation, and;
- Initial fills, spares & consumables.

Construction times for the above include procurement of equipment and materials not identified as long lead procurement items. These times also allow for approximately two months per year of lost construction time during the first 2 years of construction due to extreme cold weather conditions during the winter. After the first 2 years, it is anticipated that construction will have progressed sufficiently that interior building spaces will be heated thereby enabling construction during these periods of extreme cold weather. Demobilization will begin prior the completion of the electrical and I&C systems and is assumed to end six months after completion of the construction activities.

18.1.2.6 Mockup and Testing

Technology development associated with the HPF will require pilot testing of the HyS process decomposer and electrolyzers before commercial implementation. These pilot testing activities are discussed in more detail in Section 16 and in the DDN's in Section 7 of this report. Pilot testing of the decomposer, and the electrolyzer, and integrated operation will be completed well before the end of the final design effort for the HPF, but after the beginning of construction of the NHSF, PCF and BOP.

18.1.2.7 Training

The schedule identifies two distinct formal operator training activities: NHSF training and HPF training. The NHSF operator training is anticipated to begin prior to the start of construction and be completed during the pre-commissioning testing. Completion of the training will be marked by the operators successfully passing the NRC licensing test. The NHSF training simulator will be installed and operational in the latter portion of the certification training. Certification training is assumed to encompass aspects of the NHSF, PCF and BOP. HPF operator training is being considered separately due to the complexity of the HyS process. HPF training is anticipated to occur over the 6 months during the facilities' pre-commissioning and commissioning.

18.1.3 Initial Operation

Pre-commissioning, commissioning and startup activities for the demonstration NGNP include both preoperational testing during construction as well as startup activities after construction completion. Per the BEA WBS, these activities are grouped into two separate project level elements (1) pre-commissioning activities prior to completion of construction and nuclear fuel loading, and (2) startup & testing activities that occur after completion of construction and fuel loading. Pre-commissioning entails such tasks as verification of the proper installation of piping, mechanical equipment, flushing of piping, hydrostatic testing of tanks and vessels. Startup & testing entails a more formal certification by NGNP engineering staff of equipment operation and conformance to design specifications. In addition, NHSF commissioning activities include fuel loading, lower power testing, synchronization to the grid, power ascension testing, and plant acceptance testing. These activities demonstrate NGNP startup testing procedures and initial operation capability and, thereby, establish precedents for the commercial NGNP.

18.1.4 Commercial Operation

The preconceptual schedule includes a commercial operation period of three years. At the end of this period, the facility will be shut down for inspections of the various facilities to determine the condition of equipment material components. This period will also afford to opportunity to perform routine equipment maintenance or replace exhausted system components such as catalysts and resins. This first outage period during commercial operation is assumed to only last a month before commercial operation resumes.

18.2 SCHEDULE DEVELOPMENT

The NGNP Preliminary Project Management Plan (PMP) [18-1] was used as guidance during the initial development of the project schedule. Considering the target end date for NGNP full power operation in 2018, as well as the desire to develop a schedule that is not overly aggressive, Option 2 of the PMP was adopted as the basis for the schedule. The PMP schedule, from the initiation of conceptual design at the beginning of FY 2007 to full power operation at the end of FY 2018, had a 12 year duration. The start date has been delayed until the beginning of FY 2008 and, in order to maintain the target completion date, the duration was decreased to 11 years. A summary level schedule is shown in Figure 18-1.

As the preconceptual design special studies and other activities progressed, more detail was added to the schedule. Schedule activities for the NHSF are based on updated cost and schedule information from the PBMR DPP, which has been tailored to the specific NGNP design. Activity information for the other NGNP plant facilities is developed from the experience base of the Westinghouse NGNP Team. The resulting schedule activities have been organized to conform to the WBS developed for the NGNP project, as much as practicable. First, the organization, level of detail for activities, and activity timelines were finalized. Then the schedule was migrated to Primavera, and analyzed. A critical path analysis was performed and schedule adjustments and/or recommendations made.

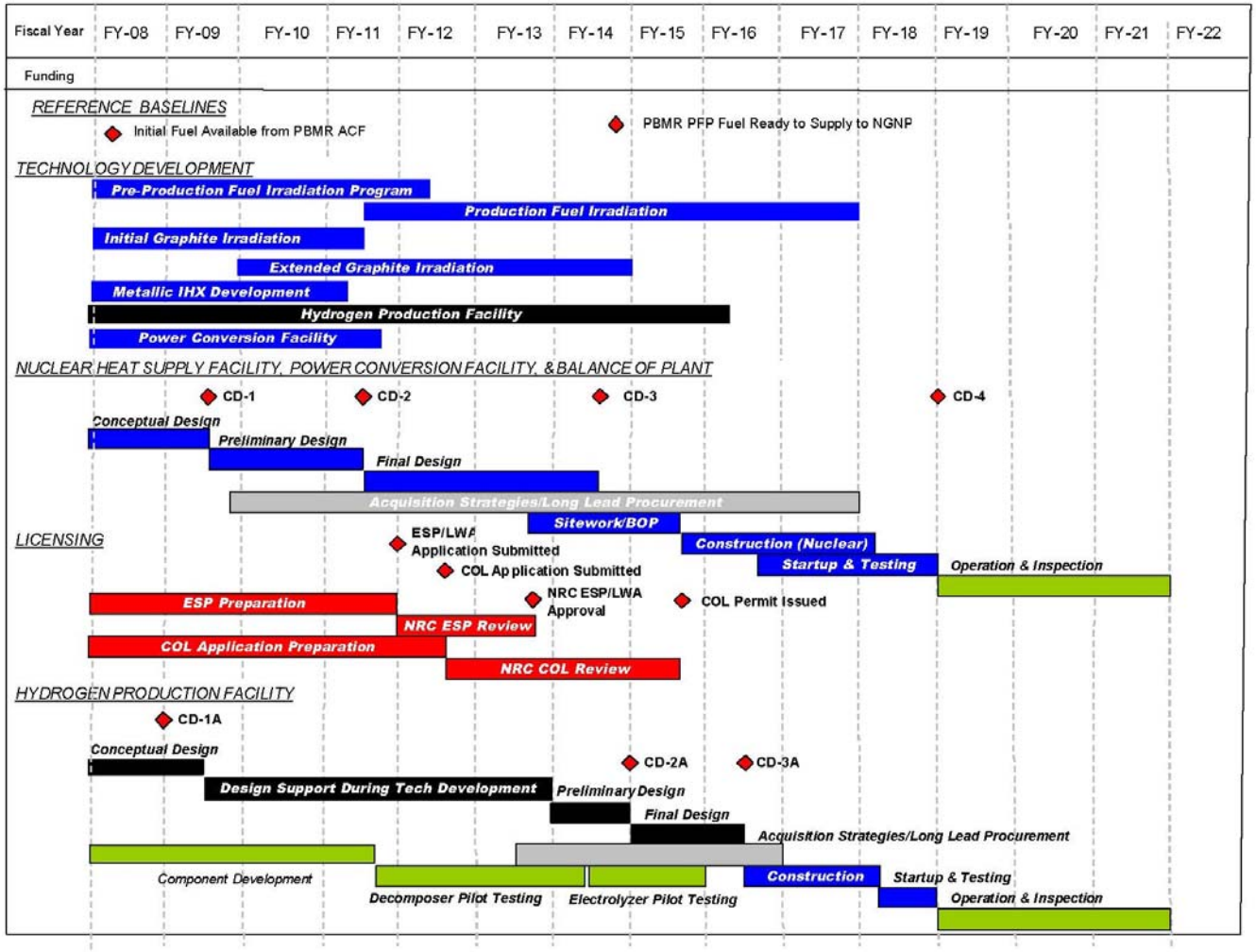

Figure 18-1: NGNP Project Schedule & Funding Profile Summary

18.3 SCHEDULE RESULTS, ANALYSIS AND CRITICAL PATH

In general, the overall NGNP schedule is 11 years in duration, with an additional 3 years of operation after the final project completion date. The schedule begins with the start of conceptual design in October 2007. The final completion date, meaning the completion of construction, startup & testing activities and operation of the facility at full power, is at the end of September 2018. The following discussion highlights key activities and milestones that need to occur in the schedule to meet the 2018 completion date. Mirroring to the format of the schedule, the discussion is organized by engineering/design, acquisition strategies and long lead procurement, licensing, and construction topics. All dates mentioned in the following discussion refer to the latest date that a particular activity can occur to support the project completion date.

Engineering and design will be a continuous evolving process throughout the project. However, these activities have been group into three design phases to mirror DOE terminology and the critical decision process (e.g., conceptual, preliminary and final design). The resulting schedule durations and critical design dates for the NGNP Project are summarized below.

NHSF, PCF, and BOP Design

- Conceptual Design → 18 months
- Preliminary Design → 24 months
- Design Freeze to support Final Safety Analysis → End of March 2011. This is coincident with the completion of the Preliminary Design.
- Final Design → 36 months. Completion End of March 2014

HPF Design

- HPF Conceptual Design → 18 months
- HPF Preliminary Design → 12 months
- HPF "Front-End" Design Package Complete → End of September 2014. This date is also coincident with the completion of the HPF Preliminary Design.
- HPF Final Design → 18 months. Completion mid April 2016

As expected, the results of required technology development need to be completed and integrated into the design efforts as the research and development progresses. This is especially true for the HPF. Technology development for HPF systems is anticipated to delay the start of Preliminary Design until the end of September 2013.

Acquisition strategy and long lead procurement must start as early as October 2009 with the ordering of material for the reactor pressure vessel in order to support the construction

schedule. The last long lead procurement contract to be awarded is for the HPF decomposer. This contract award needs to occur by the start of October 2013, at the latest. All other long lead procurement contracts will be awarded within these two dates. The following summarizes the latest date that construction contracts may be awarded for the various facility construction subcontractors:

NHSF and PCF/BOP Construction Contracts

- Site-work Subcontract → End of February 2013
- Civil Subcontract → End of October 2014
- Process/Mechanical Subcontract → End of September 2015
- Electrical/I&C Subcontracts → End of January 2016

HPF Construction Contracts

- HPF Civil, Process/Mechanical Subcontracts → End of March 2016
- HPF Electrical/I&C Subcontracts → End of December 2016

Licensing activities, whether application preparation activities by the NGNP Project team or NRC review activities, occurs during approximately the first 7½ year of the schedule. As noted earlier, the NRC licensing process includes both an ESP/LWA and a COL application review process. The anticipated NRC review duration for each is anticipated to be 21 months and 36 months, respectively, and will occur during the latter part of the 7½ year period. The state and local environmental permitting process occurs in two phases: the first phase for the BOP, NHSF and PCF; and the second phase for the HPF. To support the project completion date, the following key licensing and permitting milestones must be achieved.

NRC Licensing

- ESP/LWA Permit Applications Submitted to NRC → End of September 2011
- COL Application Submitted to NRC → End of May 2012
- Favorable ESP/LWA Decision Received → End of June 2013
- COL Permit Issued → End of June 2015

State/Local Environmental Permits

- NHSF, PCF, and BOP permit application submitted → End of September 2010
- NHSF, PCF, and BOP permits received → End of September 2012
- HPF permit application submitted → End of December 2014
- HPF permits received → End of March 2016

The schedule shows that construction must begin as soon as the NRC licenses and state/local environmental permits are issued. The ESP/LWA Permit enables BOP site-work and non-nuclear construction to begin approximately 24 months before nuclear construction begins. The duration from first concrete to the completion of construction activities is approximately 36 months. First concrete for the NHSF must be poured by the start of June 2015 and construction complete by the end of November 2017. Construction of the BOP systems and PCF is concurrent with the construction of the NHS. Construction of the HPF must start by the start of July 2016.

A critical path analysis of the schedule resulted in the identification of three potential critical paths:

1. NHSF Engineering / Design, Licensing and Construction
2. IHX Technology Development
3. HyS Technology Development.

As shown in Figure 18-9, the first critical path results from analyzing the scheduled activities and identifying activities through precedent and antecedent links between activities. The second two potential critical paths are derived from an assessment of less tangible risks inherent in schedule. Specifically, the uncertainties associated with the technology development of the IHX and HyS process. These critical paths are shown in Figure 18-10, and Figure 18-11.

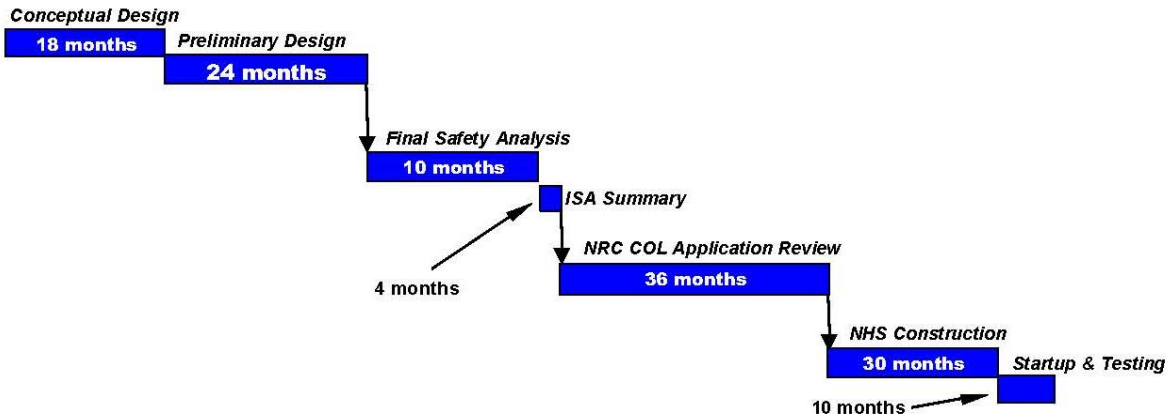

Figure 18-9: NHSF Engineering / Design, Licensing & Construction Critical Path

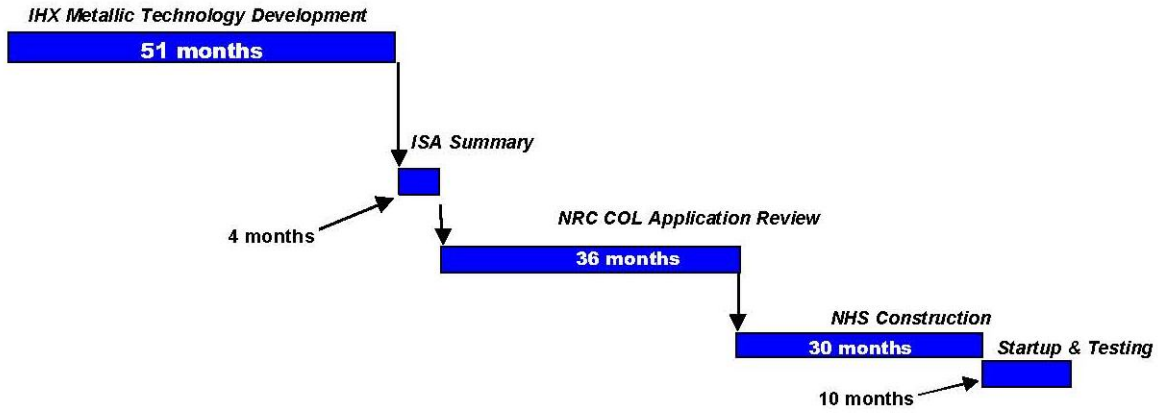

Figure 18-10: IHX Technology Development Critical Path

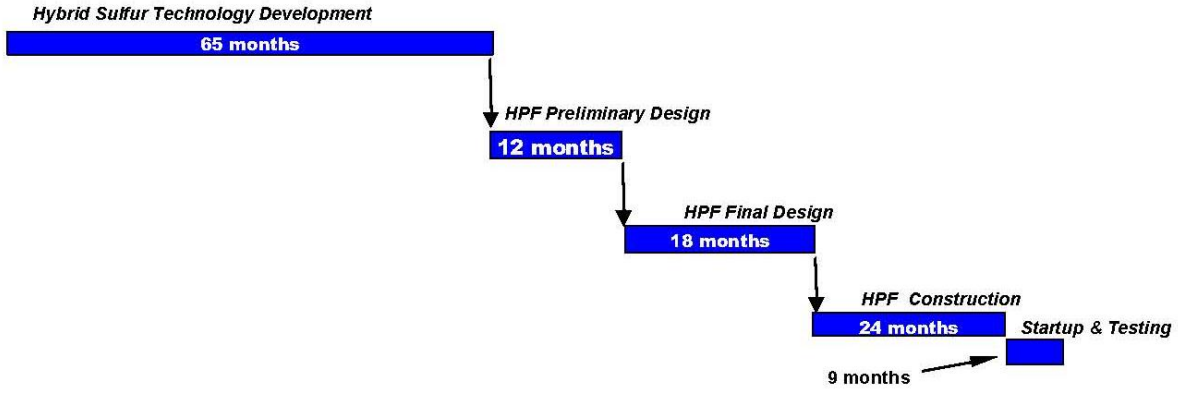

Figure 18-11: HyS Technology Development Critical Path

18.4 NGNP PROJECT RISKS AND APPROACH TO MITIGATION

The approach adopted for the NGNP Project Schedule is one that assumes a balanced risk approach to meet the FY 2018 completion date. Invariably, any risk inherent in the schedule will have an associated risk to the project cost estimate. Therefore, mitigation of schedule risks will not only ensure timely completion of the project, but also reduce the likelihood of cost variances from the estimated project cost. Each of the PCDR design and assessment sections lists the related complexity and risks as a means of tracking alignment with the corresponding mitigation strategy that may warrant an R&D or programmatic priority. The principle risk areas are:

- Licensing,
- Technology Development,
- Project Development,
- Project Experience,
- Adequate Resources, and
- Commercial Infrastructure.

For each of these principal risk areas, Table 18-3 summarizes the basis for the risks and the planned approach to mitigate them.

Table 18-3: NGNP Project Risks and Approach to Mitigation

	Risk Areas	Summary	Mitigation
A	**Licensing**		
1	NRC acceptance of NGNP licensing bases and strategy, plus R&D requirements for V&V and/or testing	NRC's acceptance of the PBMR Pre-application design certification content plus requirements for safety related V&V are TBD.	A quality NGNP Pre-application Program and V&V Program provide satisfactory resolution, plus confirmatory testing potential with NGNP
2	NRC resources and commitment to support Project schedule	NRC's resources may be inadequate to support the target NGNP schedule due to low commitment priority	Priority to be assigned in the near-term by Users/Alliance, DOE, Congress, and as soon as possible by Applicant(s) Schedule acceptance by the NRC as soon as possible with appropriate cost and schedule contingency
3	PBMR DPP licensing precedents and/or issues negatively	The PBMR DPP licensing approach and delays could create	Continued PBMR priority to minimize such or at least reconcile any differences that preclude

	Risk Areas	Summary	Mitigation
	impact the acceptance of NGNP licensing bases and strategy	licensing difficulties with the NRC	problematic precedent setting elsewhere
B	**Technology Development**		
4	IHX development uncertainty	IHX materials, performance, lifetime, nuclear codification and costs are uncertain	Prioritize design, multi-materials qualification, V&V program and supplier development starting in FY08 Appropriate cost and schedule contingency included
5	HyS development uncertainty	HyS materials, performance, lifetime and costs for decomposer and electrolyzers are uncertain	Prioritize design, multi-materials qualification, V&V program and supplier development in FY08 Appropriate cost and schedule contingency included Stay positioned to adopt alternative hydrogen production technology if HyS technology proves impractical or too costly as R&D proceeds.
6	Fuel performance uncertainty	Qualification of Pilot Fuel Plant reference UO_2 fuel for 500 MWt and 950C core outlet temperature is pending TBD fuel irradiation program for the NGNP	Prioritize fuel qualification and source term programs in SA and the US Contingency plans for improved fuel and/or reduced duty
C	**Project Development**		
7	Cost of H_2 product for commercial PBMR plants versus incumbents and contemporary alternatives is uncertain	Evaluated mature PBMR H2 PHP plant competitiveness is uncertain due to design and performance uncertainties associated with processes	Continue priority on critical design and cost development and management plus economic analyses with candidate user interactions for early indicators of attractiveness
8	NGNP Project costs and schedule exceed stakeholder acceptance	Potential for DOE/INL overhead costs, NRC R&D costs and schedule extensions, extended multiple vendor team costs and required R&D costs being excessive	Decisive Project management that focuses on critical path issues for Project implementation Committed, capable Vendor/Operator/User team with cost/risk offset/sharing International cooperation via GIF focuses on enhancing technologies

	Risk Areas	Summary	Mitigation
9	Major increases in Project costs from current estimates	Current estimating process is limited by the extent the Project can be defined, and by limited accuracy of estimating approaches applied during the preconceptual phase of work.	High costs and risks for reactor and fuel development are covered by the PBMR DPP and based on current supplier quotations Appropriate contingencies are included in overall Project costs per the experienced team
D	**Project Experience**		
10	Performance risk	The plant may have to operate at lower power, lower temperature, or suffer higher than expected outages	Thorough systems analyses and appropriate margins will be applied to cover performance uncertainties
11	Operating cost risk	Actual costs for operating, maintaining and repairing the plant may exceed current estimates	Further work will be required to refine projected operating and maintenance costs, and the likely frequency and extent of periodic overhaul cycles. Current estimates are based on judgment and experience with similar projects
12	Risk of shortened economic life	Equipment problems or failures may make it too difficult or expensive to provide repairs to complete the life of the NGNP project as forecast	Thorough RAM and investment protection analyses will be applied Critical components (e.g., IHX) will be designed for relative ease of replaceability Design of the Power Conversion Unit and the Hydrogen Production Unit will be based on current power and process industry practices where the plant design supports long-term and economical replacement of parts and repairs
E	**Adequate Resources**		
13	Adequate, sustained DOE funding support is currently missing and subject to annual political priorities and decisions	The political decision-making process to support a Project through completion is a major risk to other stakeholders with the possibility of their investment in R&D and Project development being lost.	Innovative multi-year phased commitments are needed, e.g., Technology Investment Agreements Joint commitments are needed within the US government and any supporting governments, plus the vendor/ operator/user team along with broad based political support from the user Alliance, academia, R&D institutes, etc.

	Risk Areas	Summary	Mitigation
			Multiple follow-on projects are advanced as backup demo Project candidates
14	Sufficient private sector support for Alliance and Public/Private Partnership cost/risk sharing arrangements are TBD	The Alliance/ Partnership concept builds on FutureGen precedents, with DOE ownership and INL siting, but is challenging for gaining end-user support	HTGR community Working Group efforts are underway to test the Alliance and Partnership concept in concert with Congressional/DOE budget support Multiple follow-on projects are advanced as backup demonstration Project candidates
F	**Commercial Infrastructure**		
15	Early commercial plant ownership and cost/risk sharing arrangements are TBD	A likely merchant plant ownership for the first series of commercial plants and the roles of process heat users present major challenges	Government risk sharing arrangements per NP2010 precedents

18.5 RECOMMENDATIONS

Based on the schedule analysis in Section 18.3, the following recommendations concerning the project schedule are being made in order to meet the project completion date at the end of fiscal year 2018:

- Begin implementation of the NGNP Conceptual Design, as soon as possible.
- Conduct future studies identified in the Conceptual Design Schedule described in Section 18.6 below.
- Start NGNP pre-application interactions with NGNP as soon as possible to secure the licensing strategy basis for the schedule.
- Immediately implement the recommended technology development programs, particularly in the areas of the IHX and HyS process.
- Begin developing the acquisition strategies and long lead procurement programs for the major equipment identified in the schedule.
- Develop and implement risk mitigation measures identified and recommended in Section 18.4 that are not already listed above.

18.6 CONCEPTUAL DESIGN SCHEDULE

During the course of the preconceptual design effort, the Westinghouse NGNP Team developed more detail for conceptual design activities and provides the conceptual design schedule included as Appendix 18B of this Section. A summary level version of this schedule is shown in Figure 18-2. It should be noted that no additional analysis has been performed for the conceptual design schedule beyond identifying activities and recommended activity durations.

The conceptual design schedule is arranged in a similar manner as the NGNP Project schedule, utilizing the BEA WBS as much as practicable. In addition to design activities, the schedule also shows programmatic activities such as program level plan and procedure development and design reviews by BEA at 35 and 90% conceptual design milestones. Other important activities shown include pre-application interactions with the NRC and the immediate start of essential technology development tasks, as recommended by the Team.

The schedule assumes that Conceptual design will begin in FY 2008, and has an overall design period of 18 months. This period could be shorter or longer depending on the staffing level allocated to the project. In addition, the schedule shows the execution of twelve future studies, identified to BEA by the Westinghouse NGNP Team during the preconceptual design. These studies include:

- Special Application Study (C.1)
- Top Level Requirements and Plant Level Plans (C.2)
- Initial Licensing Basis Events (C.3)
- NHSS Configuration (C.4)
- Plant Layout (C.5)
- Hydrogen Process and Material Selection (C.6)
- Value Engineering Study (C.7)
- COLA Pre-application Strategy Future Study (C.8)
- Construction Modularization Study (C.9)
- Steam Generator Design Trade Study
- Wastewater Treatment Optimization Study
- Transportation Study

All of these future studies are shown on the schedule to occur within the first 5 months of the conceptual design. The entire list of futures studies is included in the PCDR Executive Summary and Introduction sections.

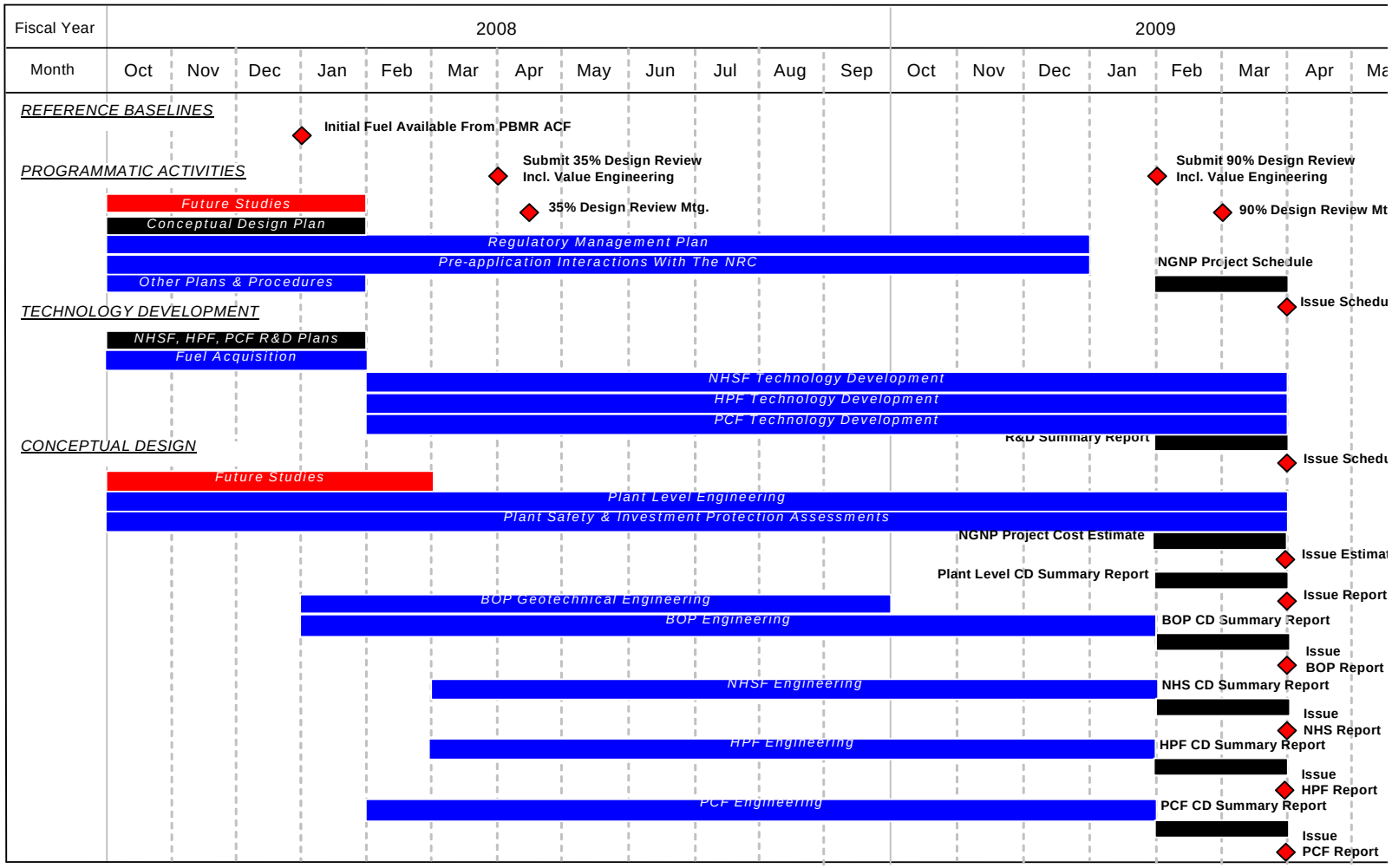

Figure 18-12: NGNP Conceptual Design Schedule Summary

REFERENCES

[18-1] "Next Generation Nuclear Plant Project: Preliminary Project Management Plan", INL/EXT-05-00952, Rev.1, Battelle Energy Alliance, Idaho National Laboratory, March 2006.

LIST OF ASSUMPTIONS

The following assumptions are used in the development of the NGNP Project schedule.

18.1 Adequate and timely funding for technology development, design, licensing and construction will be provided.

18.2 Construction of the facility is assumed to be under three or more separate construction contracts for the NHSF, HPF, and the remaining balance of the plant including the PCF. The NHSF contractor will be responsible for all the NHSF systems, structures, and components requiring nuclear grade quality elements. The HPF contract will include the construction of HPF process systems, structures, and components typically handled by a process industry contractor. Remaining items in the PCF and Site/Balance of Plant systems will be included in a third general contract. It is expected that each of the major contracts will retain separate subcontractors for the civil/structural, process and mechanical, electrical and I&C work.

APPENDICES

APPENDIX 18A NGNP PROJECT SCHEDULE

The following PDF files of the NGNP project schedule are provided formatted for full sized plots and for 11 x17 printing.

Section 18 NGNP SCHEDULE_FINAL_PLOT.pdf
Section 18 NGNP SCHEDULE _FINAL_11x17.pdf
Section 18 NGNP SCHEDULE _FINAL_ with ties11x17.pdf

APPENDIX 18B NGNP PROJECT CONCEPTUAL DESIGN SCHEDULE

The following PDF files of the NGNP project conceptual design schedule are provided on the PCDR CD formatted for full sized plots and for 11 x17 printing.

Section 18 CONCEPTUAL SCHEDULE_FINAL_PLOT.pdf
Section 18 CONCEPTUAL SCHEDULE_FINAL_11x17.pdf
Section 18 CONCEPTUAL SCHEDULE_FINAL_with ties11x17.pdf

APPENDIX 18C DEFINITIONS

1. ***DOE Critical Decision Points (CDs)*** – as defined by DOE Order 413.3
   a. CD-0 – Approve Mission Need: This decision point occurs at the end of preconceptual planning, the first aspect of the Project Planning Phase. Approval allows the project to proceed with conceptual design using DOE funds. At this stage, the Project requests PED funding. Prerequisites of this decision point include the following:

      - Justification of mission need document;
      - Acquisition strategy;
      - Preconceptual planning, and;
      - Mission Need Independent Project Review.

   b. CD-1 – Approve Preliminary Base Range: Occurs at the completion of the Conceptual Design, which is the second and final aspect of the Project Planning Phase, as defined by DOE. It is also the beginning of the Project Execution Phase of a Project. DOE approval at CD-1 allows the expenditure of PED funds for design. Prerequisites of this decision point include the following:

      - Acquisition Plan;
      - Conceptual Design Report;
      - Preliminary Project Execution Plan and baseline range;
      - Project Data sheet for design;
      - Verification of mission need, and;
      - Preliminary Hazard Analysis Report.

   c. CD-2 – Approve Performance Baseline: Occurs at the completion of the Preliminary Design, which is the first aspect of the Project Execution Phase as defined by DOE. DOE approval at CD-2 allows for the establishment of a baseline budget for construction, the continuation of design, and the request for construction funding. Prerequisites of this decision point include the following:

      - Preliminary design;
      - Review of contractor project management system;
      - Final Project Execution Plan and performance baseline;
      - Independent cost estimate;
      - National Environmental Policy Act documentation;
      - Project Data Sheet for construction;
      - Draft Preliminary Safety Analysis Report, and;
      - Performance Baseline External Independent Review.

d. CD-3 – Approve Start of Construction: Occurs at the completion of the Final Design, which is the second aspect of the Project Execution Phase as defined by DOE. This decision point is the approval of the expenditure of DOE funds for construction. Prerequisites of this decision point include the following:

- Updated Project Execution Plan and performance baseline;
- Final design and procurement packages to the degree appropriate to initiate construction as scheduled;
- Verification of mission need;
- Budget and congressional authorization and appropriation enacted;
- Approval of Safety documentation
- Execution Readiness Independent Review.

e. CD-4 – Approve Start of Operations or Project Closeout: Occurs at the completion of the Construction, which is the third and final aspect of the Project Execution Phase as defined by DOE. CD-4 is also the start of the Mission phase of a project. This decision point is the approval to allow the start of operations or project closeout. Prerequisites of this decision point include the following:

- Operational Readiness Review and acceptance report;
- Project transition to operations report, and;
- Final Safety and Analysis Report.

A Project Closeout Report is completed after CD-4.

2. ***Long Lead Procurement*** – Refers to materials and equipment that must be procured in advance of construction in order to be manufactured and/or delivered to the project site as required to support the construction schedule and construction end date.

APPENDIX 18D FINAL DESIGN REVIEW PRESENTATION TO BEA

Section 18
Project Schedule

Peter Wells

Preconceptual Design Report
90% Design Review

May 8-10, 2007

P B M R

Westinghouse NGNP Team

Introduction

- Project schedule from start of conceptual design through startup and operation of the facility, up to the first inspection.
- PBMR DPP reference baseline
- Adopts a balanced risk approach
- Discussion Topics
  - Schedule Basis & Assumptions
  - Critical Paths
  - Cost & Schedule Risks and Mitigation
  - Recommendations

P B M R

Organization

- Schedule Activities broadly grouped by project level activities, and further subcategorized into facility level activities.
- Project level activities are identified and grouped in accordance with the WBS activities provided by BEA/INL.
- On the fourth WBS level, project activities are subcategorized to the overall plant and facility level in the following manner:
  - Plant Level Design and Integration;
  - Overall Site and Balance of Plant;
  - Nuclear Heat Supply Facility;
  - Hydrogen Production Facility, and;
  - Power Conversion Facility.

P B M R

DOE Milestones

DOE Milestone (Critical Decision)	Occurrence (DOE 413.3)
CD-1	Completion of NHSF, PCF & BOP Conceptual Design
CD-1A	Completion of HPF Conceptual Design
CD-2	Completion of NHSF, PCF & BOP Preliminary Design
CD-2A	Completion of HPF "Front End" design package
CD-3	Completion of NHSF, PCF & BOP Final Design and after receipt of NRC Early Site Permit Decision
CD-3A	After successful resolution of DOE comments on HPF "Front End" design package. Occurs during HPF final design.
CD-4	Completion of Construction, Startup & Testing Start of operation

Basis and Assumptions

- Nuclear Heat Supply Facility activities are developed from the project schedule for the PBMR DPP
  - All activities, activity durations, and activity linking have been reviewed by PBMR and modified to reflect NGNP project specific issues.
- Hydrogen Production Facility is based on the work performed during Special Studies 20.7 and the development of Section 7.2 of the PCDR.
  - Preliminary and Final Design do not occur concurrently with NHSF design due to technology development
- Power Conversion Facility activities developed from related team project experience for similarly sized systems.
  - The schedule for the PCF essentially follows that of the NHSF, with the exception of required technology development and acquisition strategies.
  - Design, construction, commissioning and startup of the PCF can be achieved concurrently with the NHSF schedule.

P B M R

Basis and Assumptions

- Adequate and timely funding for technology development, design, licensing and construction will be provided.
- Construction of the facility is assumed to be under three separate construction contracts
  - NHSF for nuclear grade quality elements
  - HPF for process contracting approach
  - PCS and BOP for conventional power industry practice.
  - For each of the three major construction contracts, separate subcontractors will be retained for the civil/structural, mechanical, electrical, and I&C.

Project & Facility Level 3 Elements

- Engineering/Design
  - Technology Development
  - Conceptual Design
  - Preliminary Design
  - Final Design
  - Acquisition Strategies
    - Long Lead Procurement Items
    - Construction Contracts
  - Licensing & Permitting to Construct the Facility
    - NRC Licensing
    - Environmental Permitting

P B M R

Long Lead Procurement

Facility	Long Lead Procurement Item
Balance of Plant	Wastewater Evaporator
Nuclear Heat Supply Facility	Training Simulator Fuel Graphite Reactor Pressure Vessel Primary Pressure Boundary Core Barrel Assembly Core Structure Ceramics Intermediate Heat Exchanger Fuel Handling & Storage Systems Helium Services System
Hydrogen Production Facility	Decomposer Reactor and System
Power Conversion Facility	Air Cooled Condenser Turbo Machinery Steam Generators Feed Water Heaters Condensate Feedwater Pumps Deaerator

Project & Facility Level Elements

- Construction
  - Licensing & Permitting to Operate
  - Overall Site and BOP
  - Nuclear Heat Supply Facility
  - Hydrogen Production Facility
  - Power Conversion Facility
  - Mockup & Testing
    - Decomposer Pilot Testing
    - Electrolyzer Pilot Testing
  - Training

Project & Facility Level Elements

- Initial Operation & Inspection
  - Precommissioning (Cold start-up)
  - Commissioning
  - Startup & Testing
- Operation
  - Three years of operation
  - One month shutdown for inspection & Analysis

P B M R

Schedule Development

- Option 2 identified in the Preliminary Project Management Plan was adopted as the basis for the schedule.
- The PMP schedule from the initiation of conceptual design at the beginning of FY 2007 to full power operation at the end of FY 2018 had a 12 year duration.
- The start date has been delayed until the beginning of FY 2008 and, in order to maintain the target completion date, the duration was decreased to 11 years, followed by 3 years of operation .
- The NGNP schedule is loaded into Primavera.
- Primavera schedules are provided in full sized plot and 11 x 17 format and included in Section 18 as PDF appendices.

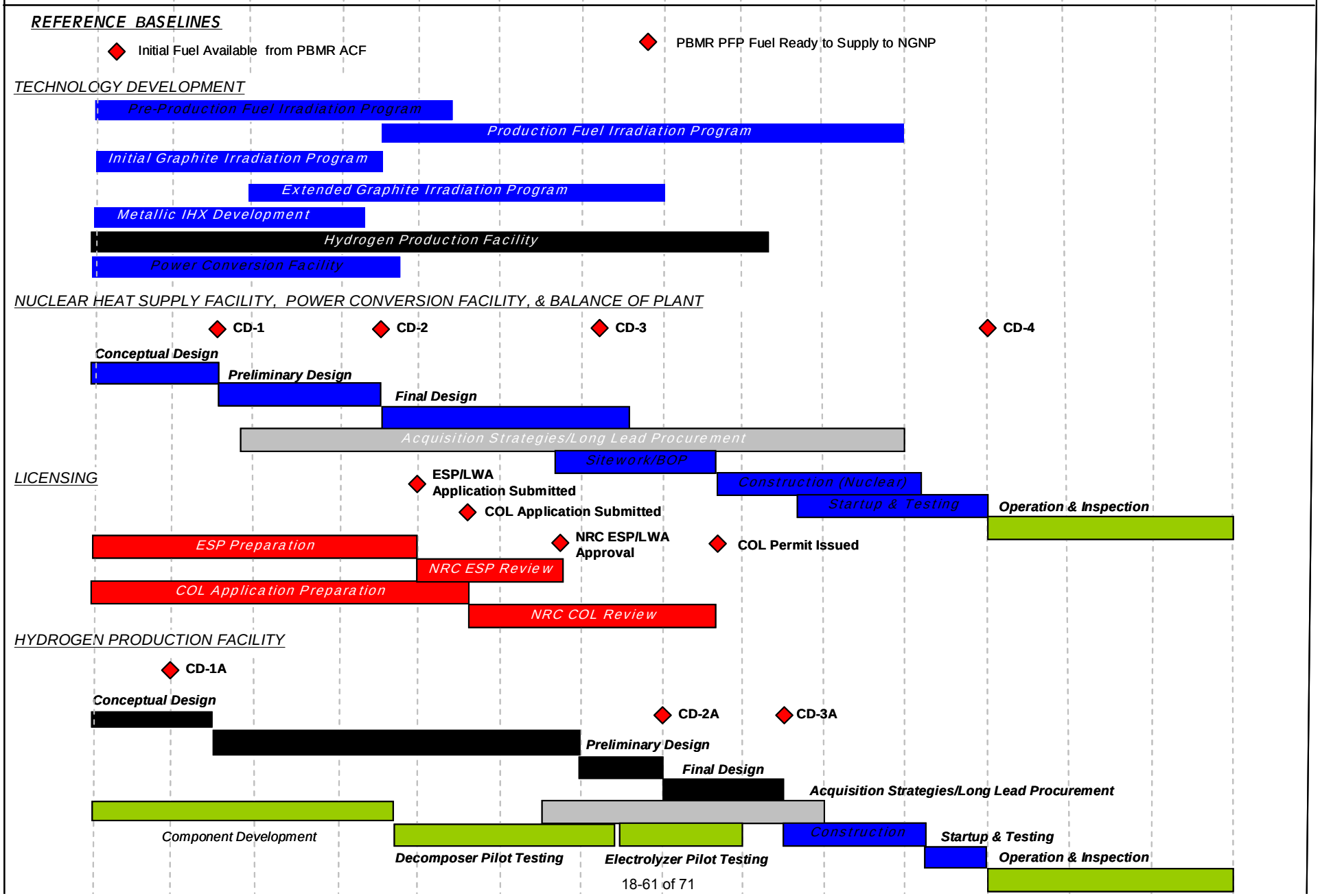
Fiscal Year
FY-08
FY-09
FY-10
FY-11
FY-12
FY-13
FY-14
FY-15
FY-16
FY-17
FY-18
FY-19
FY-20
FY-21
FY-22
Funding
REFERENCE BASELINES
Initial Fuel Available from PBMR ACF
PBMR PFP Fuel Ready to Supply to NGNP
TECHNOLOGY DEVELOPMENT
Pre-Production Fuel Irradiation Program
Production Fuel Irradiation Program
Initial Graphite Irradiation Program
Extended Graphite Irradiation Program
Metallic IHX Development
Hydrogen Production Facility
Power Conversion Facility
NUCLEAR HEAT SUPPLY FACILITY, POWER CONVERSION FACILITY, & BALANCE OF PLANT
CD-1
CD-2
CD-3
CD-4
Conceptual Design
Preliminary Design
Final Design
Acquisition Strategies/Long Lead Procurement
Sitework/BOP
Construction (Nuclear)
Startup & Testing
Operation & Inspection
LICENSING
ESP/LWA Application Submitted
COL Application Submitted
NRC ESP/LWA Approval
COL Permit Issued
ESP Preparation
NRC ESP Review
COL Application Preparation
NRC COL Review
HYDROGEN PRODUCTION FACILITY
CD-1A
CD-2A
CD-3A
Conceptual Design
Preliminary Design
Final Design
Acquisition Strategies/Long Lead Procurement
Component Development
Decomposer Pilot Testing
Electrolyzer Pilot Testing
Construction
Startup & Testing
Operation & Inspection

P B M R

Schedule Analysis

- Conceptual Design begins October 1st 2007
- Project completion end of September 2018.
- BOP, NHSF, PCF Design
  - Conceptual Design → 18 months
  - Preliminary Design → 24 months
  - Design Freeze to support Integrate Safety Analysis (ISA) → End of March 2011. This is coincident with the completion of the Preliminary Design.
  - Final Design → 20 months. Completion End of November 2012
- HPF Design
  - HPF Conceptual Design → 18 months
  - HPF Preliminary Design → 12 months
  - HPF "Front-End" Design Package Complete → End of September 2014. This date is also coincident with the completion of the HPF Preliminary Design.
  - HPF Final Design → 18 months. Completion End of July 2017

P B M R

Schedule Analysis

- **Acquisition Strategies/Long Lead Procurement**
  - Start early October 2009 for purchase of materials for reactor pressure vessel
  - Last long lead procurement item HPF Decomposer
- **BOP, NHSF, PCF Construction Contracts**
  - Sitework Subcontract → End of February 2013
  - Civil Subcontract → End of October 2014
  - Process/Mechanical Subcontract → End of September 2015
  - Electrical/I&C Subcontracts → End of January 2016
- **HPF Construction Contracts**
  - HPF Civil, Process/Mechanical Subcontracts → End of March 2016
  - HPF Electrical/I&C Subcontracts → End of December 2016

P B M R

Schedule Analysis

- NRC licensing process over first 7½ years
- NRC Licensing
  - ESP/LWA Permit Application Submitted to NRC → End of September 2011
  - COL Application Submitted to NRC → End of May 2012
  - Favorable ESP/LWA Decision Received → End of June 2013
  - COL Permit Issued → End of June 2015
- State/Local Environmental Permits
  - BOP, NHSF and PCF permit application submitted → End of September 2010
  - BOP, NHS and PCF received → End of September 2012
  - HPF permit application submitted → End of December 2014
  - HPF permits received → End of March 2016

Critical Paths

Critical Path #1: Nuclear Heat Supply Facility Engineering/Design, Licensing & Construction
Critical Path- 132 Months

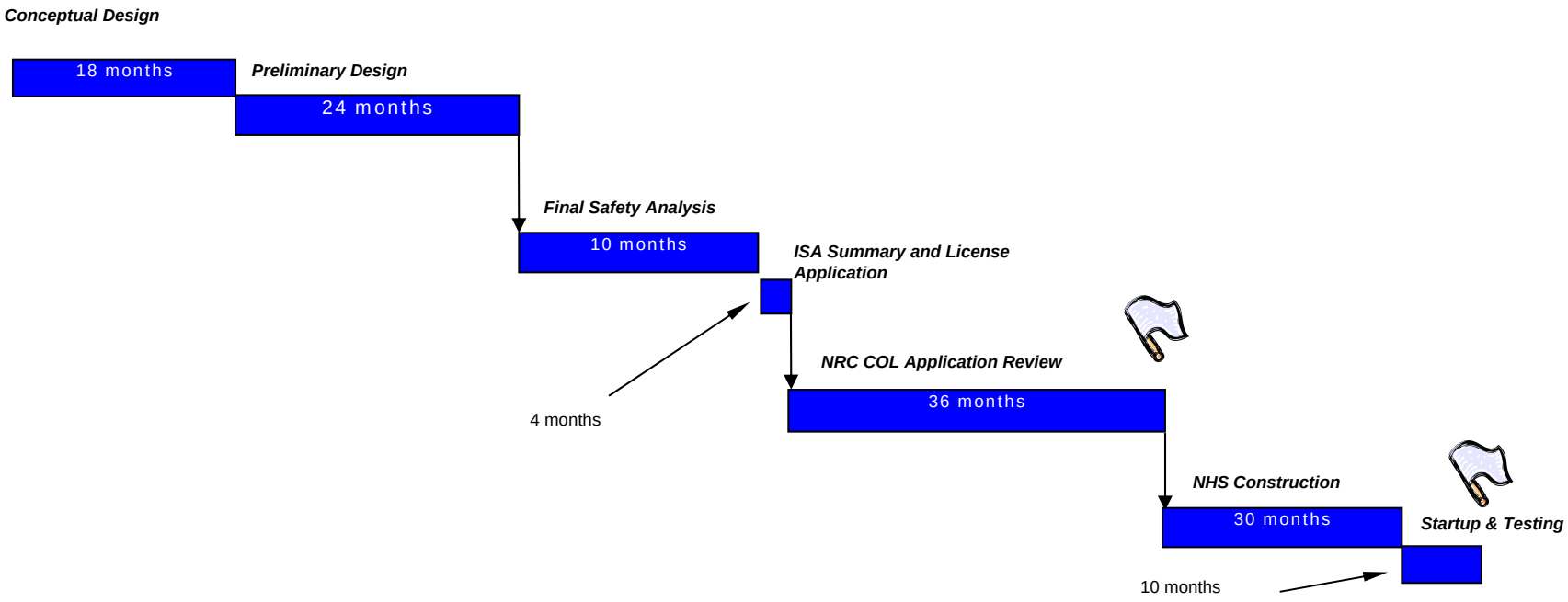

Critical Paths

Critical Path #2: Intermediate Heat Exchanger Technology Development Critical Path – 131 Months

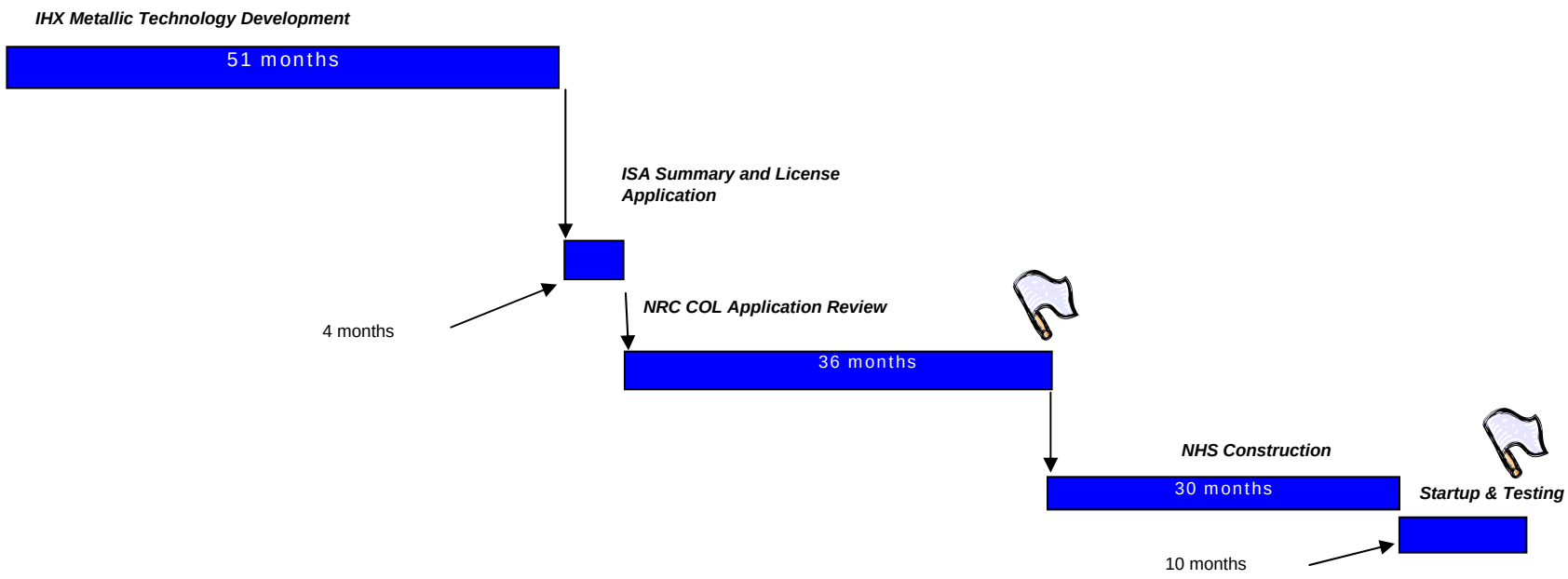

P B M R

Critical Paths

Critical Path #3: Hydrogen Production Facility Technology Development Critical Path – 128 Months

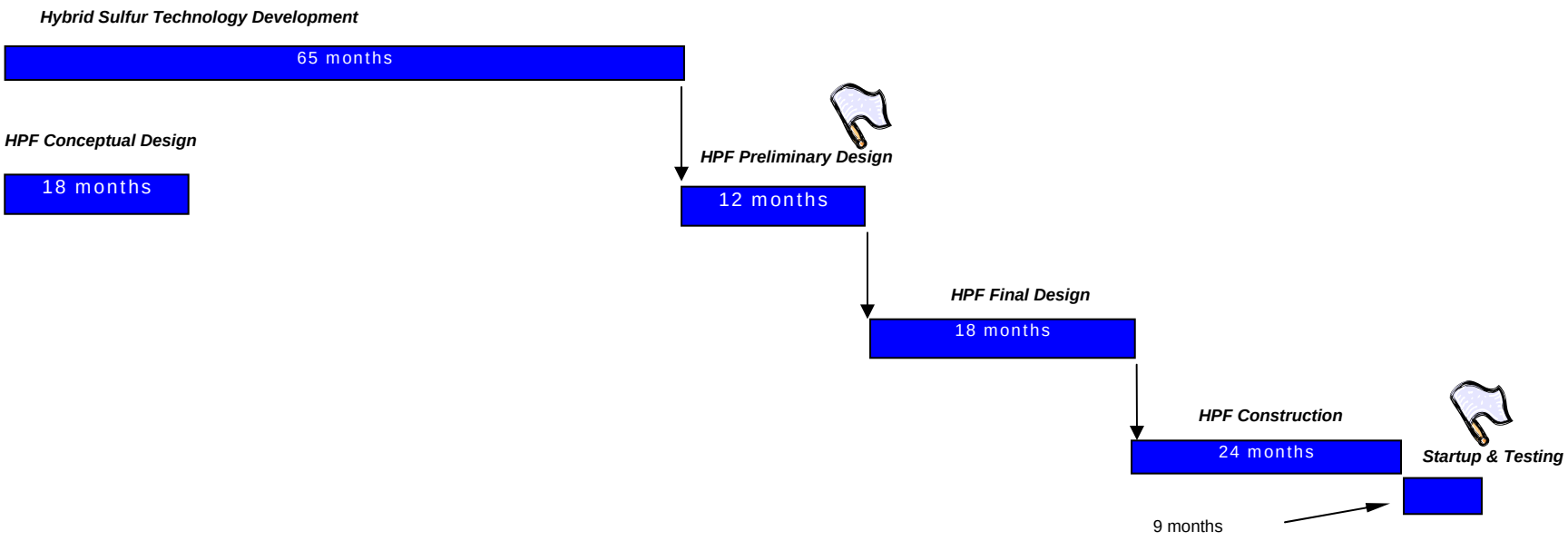

P B M R

Recommendations

- **Recommendations concerning the project schedule to meet the project completion date at the end of fiscal year 2018**
  - **Begin implementation of the NGNP Conceptual Design, as soon as possible.**
  - **Immediately implement the recommended technology development programs, particularly in the areas of the IHX and HyS process.**
  - **Conduct future studies identified in the Conceptual Design Schedule**
  - **Start NGNP preapplication interactions with NGNP as soon as possible to secure the licensing strategy basis for the schedule.**
  - **Begin developing the acquisition strategies and long lead procurement programs for the major equipment identified in the schedule.**
  - **Begin implementation of all risk mitigation**

P B M R

NGNP CONCEPTUAL DESIGN SCHEDULE
Major Activities

- Detailed Primavera Schedule provided in Plot Size and 11x17 format
- Programmatic activities
  - Conceptual design plan
  - Regulatory Management Plan
  - NRC interaction
- Conceptual Design
  - Future Studies
  - Plant Level Engineering
  - Plant Safety & Investment protection Assessments
  - Geotechnical Engineering
- Conceptual Design Products and Deliverables
  - Requirements Documents
  - Arrangement drawings
  - PFDS and UFDs
  - Equipment Sizing Calculations
  - Conceptual Design report

P B M R

NGNP CONCEPTUAL DESIGN SCHEDULE
Future Studies

- Special Application Study (C.1)
- Top Level Requirements and Plant Level Plans (C.2)
- Initial Licensing Basis Events (C.3)
- NHSS Configuration (C.4)
- Plant Layout (C.5)
- Hydrogen Process and Material Selection (C.6)
- Value Engineering Study (C.7)
- COLA Preapplication Strategy Future Study (C.8)
- Construction Modularization Study (C.9)
- Steam Generator Design Trade Study
- Wastewater Treatment Optimization Study
- Major Equipment Transportation Study

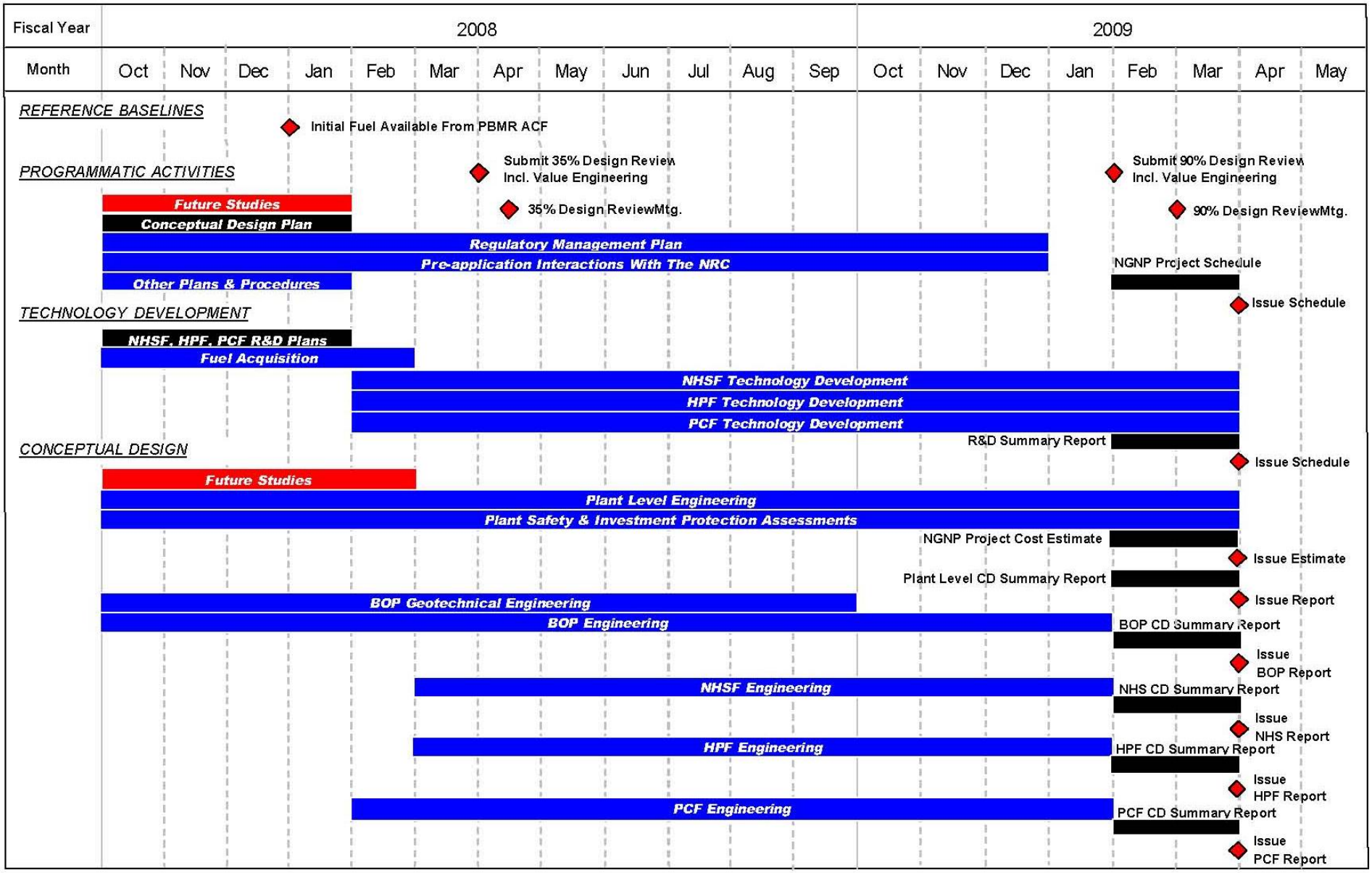
Fiscal Year
2008
2009
Month
Oct Nov Dec Jan Feb Mar Apr May Jun Jul Aug Sep Oct Nov Dec Jan Feb Mar Apr May
REFERENCE BASELINES
Initial Fuel Available From PBMR ACF
PROGRAMMATIC ACTIVITIES
Submit 35% Design Review Incl. Value Engineering
Submit 90% Design Review Incl. Value Engineering
Future Studies
35% Design ReviewMtg.
90% Design ReviewMtg.
Conceptual Design Plan
Regulatory Management Plan
Pre-application Interactions With The NRC
NGNP Project Schedule
Other Plans & Procedures
Issue Schedule
TECHNOLOGY DEVELOPMENT
NHSF, HPF, PCF R&D Plans
Fuel Acquisition
NHSF Technology Development
HPF Technology Development
PCF Technology Development
R&D Summary Report
Issue Schedule
CONCEPTUAL DESIGN
Future Studies
Plant Level Engineering
Plant Safety & Investment Protection Assessments
NGNP Project Cost Estimate
Issue Estimate
Plant Level CD Summary Report
Issue Report
BOP Geotechnical Engineering
BOP Engineering
BOP CD Summary Report
Issue BOP Report
NHSF Engineering
NHS CD Summary Report
Issue NHS Report
HPF Engineering
HPF CD Summary Report
Issue HPF Report
PCF Engineering
PCF CD Summary Report
Issue PCF Report

WBS	Activity ID	Activity Description	Orig Dur	Early Start	Early Finish	Predecessors	Successors
REFERENCE BASELINES							
DEMONSTRATION POWER PLANT (ZA)							
	REFD-0100	PRE-PRODUTION FUEL AVAILABLE FOR IRRADIATION	0	17DEC07*			
	REFD-0200	PRODUCTION FUEL AVAILABLE FOR IRRADIATION	0	11JUN12*			
	REFD-0300	DPP FUEL QUALIFICATION 5% FIMA (RIG 1)	0	13OCT14*			
	REFD-0400	DPP FUEL QUALIFIATION 11.5% FIMA (RIGS 2,3 & 4)	0	11JUN18*			
	REFD-1000	DPP INITIAL FUEL LOAD	0	02SEP13*			
	REFD-1010	DPP HANDOVER FOR COMMERCIAL OPERATION	0		01DEC14*		
	REFD-1020	DPP EQUILIBRIUM FUEL	0		01DEC15*		
FUEL MANUFACTURING PILOT PLANT (ZA)							
	REFF-1000	INITIAL FUEL AVAILABLE FROM PBMR ACF	0	15JAN08*			
	REFF-1010	FUEL AVAILABLE - PBMR PFP FOR FUEL IRRADIATION	0	11JUL12*			ENGD-1060*
	REFF-1015	IRRADIATION PROGRAM STARTS	0	01JAN08*			ENGD-1030*, ENGD-1050*
	REFF-1020	PBMR PFP FUEL READY TO SUPPLY TO NGNP	0	01DEC14*			
COMMERCIAL PLANTS (U.S.)							
	REFC-1000	PRE-APPLICATION, DESIGN, SAR, DC	545	01OCT07	30OCT09		ENGD-1770*
NGNP PROJECT							
2 00 000 ENGINEERING/DESIGN							
2 22 000 - TECHNOLOGY DEVELOPMENT							
2 22 PM2	ENGD-1010	PROJECT MANAGEMENT	2,200*	01OCT07	04MAR16	ENGD-1020*	ENGD-1100, ENGD-1140, ENGD-1180, ENGD-1575*
NUCLEAR HEAT SUPPLY FACILITY							
2 22 NHS	ENGD-1020	NUCLEAR HEAT SUPPLY FACILITY	2,085*	01OCT07	25SEP15		ENGD-1010*, ENGD-1023, ENGD-1240*
	ENGD-1023	NHS R&D PLAN	66	01OCT07	31DEC07	ENGD-1020	
	ENGD-1025	PIGGY BACK IRRADIATION	1,560*	01JAN08	23DEC13	ENGD-1030*	ENGD-1040*
	ENGD-1030	AGR-2 (PREP, IRRADIATE, DECAY, PIE)	1,040	01JAN08	26DEC11	REFF-1015*	ENGD-1025*, ENGD-1040*
	ENGD-1040	AGR-3 (PREP, IRRADIATE, DECAY, PIE)	1,300	30DEC08	23DEC13	ENGD-1025*, ENGD-1030*	
	ENGD-1050	PRE-PRODUCTION FUEL IRRADIATION	1,045	01JAN08	02JAN12	REFF-1015*	
	ENGD-1060	PRODUCTION FUEL IRRADIATION	1,045	13JUL11	14JUL15	REFF-1010*	
	ENGD-1080	IHX - METALLIC	2,093*	01OCT07	07OCT15	ENGD-1100*	ENGD-1150*
	ENGD-1090	MATERIALS DEVELOPMENT & QUALIFICATION	785*	01OCT07	01OCT10	ENGD-1100*	ENGD-1100*
	ENGD-1100	ALLOY 617 SPECIFICATION & TESTING	785	01OCT07	01OCT10	ENGD-1010, ENGD-1090*	ENGD-1080*, ENGD-1090*, ENGD-1110*
	ENGD-1110	ALLOY 230 SPECIFICATION & TESTING	785	01OCT07	01OCT10	ENGD-1100*	
	ENGD-1120	METHODS DEVELOP, VERIFICATION & VALIDATION	2,093*	01OCT07	07OCT15	ENGD-1140*	ENGD-1150*
	ENGD-1130	IHX DESIGN METHODS & CRITERIA	483	01APR09*	04FEB11	ENGD-1140	
	ENGD-1140	IHX PERFORMANCE VERIFICATION	2,093	01OCT07	07OCT15	ENGD-1010	ENGD-1120*, ENGD-1130, ENGD-1150*
	ENGD-1150	IHX CODE CASE	435	06FEB14	07OCT15	ENGD-1080*, ENGD-1120*, ENGD-1140*	
	ENGD-1160	IHX - CERAMIC	2,085*	01OCT07	25SEP15	ENGD-1180*	ENGD-1240*
	ENGD-1170	MATERIALS DEVELOPMENT & QUALIFICATION	520*	01OCT07	25SEP09	ENGD-1180*	ENGD-1190*
	ENGD-1180	REFERENCE TECHNOLOGY SELECTION	130	01OCT07	28MAR08	ENGD-1010	ENGD-1160*, ENGD-1170*, ENGD-1190*,
	ENGD-1190	MATERIALS PROPERTIES DATABASE	390	31MAR08	25SEP09	ENGD-1170*, ENGD-1180*	
	ENGD-1200	METHODS DEVELOP, VERIFICATION & VALIDATION	1,955*	31MAR08	25SEP15	ENGD-1210*	ENGD-1240*
	ENGD-1210	DESIGN METHODS & CRITERIA	650	31MAR08	24SEP10	ENGD-1180*	ENGD-1200*, ENGD-1220*, ENGD-1230*
	ENGD-1220	PERFORMANCE VERIFICATION	915	29MAR10	27SEP13	ENGD-1210*	
	ENGD-1230	MANUFACTURING TECHNOLOGY	650	31MAR08	24SEP10	ENGD-1210*	ENGD-1240*, ENGD-1250*
	ENGD-1240	CODES AND STANDARDS	1,305	27SEP10	25SEP15	ENGD-1020*, ENGD-1160*, ENGD-1200*,	
	ENGD-1250	SECONDARY HTS HELIUM MIXER	520	04OCT10	28SEP12	ENGD-1230*	
	ENGD-1260	SECONDARY HTS HELIUM MIXING CHAMBER	520	04OCT10*	28SEP12	ENGD-1180	
	ENGD-1265	SUBMIT NHS R&D FINAL REPORT	0		31DEC15*	ENGD-1644*	
HYDROGEN PRODUCTION FACILITY							
2 22 HPS	ENGD-1270	HYDROGEN PRODUCTION FACILITY	2,200*	01OCT07	04MAR16	ENGD-1300*	ENGD-1510*
	ENGD-1275	HPF R&D PLAN	45	01OCT07	30NOV07		

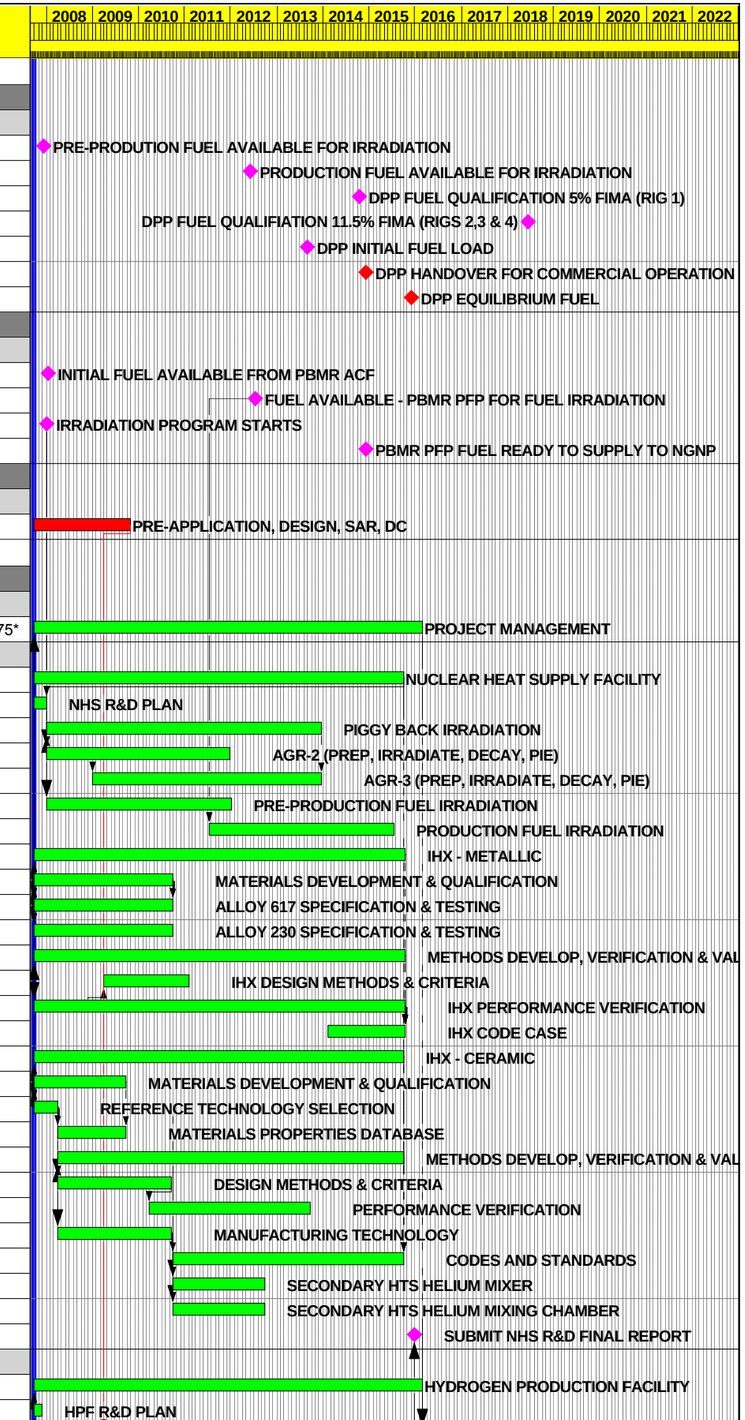

Start Date	01OCT07
Finish Date	29OCT21
Data Date	01OCT07
Run Date	18MAY07 14:17

Early Bar
Progress Bar
Critical Activity

NGNP

Sheet 1 of 8

PRECONCEPTUAL NGNP SCHEDULE

Date	Revision	Checked	Approved

© Primavera Systems, Inc.

WBS	Activity ID	Activity Description	Orig Dur	Early Start	Early Finish	Predecessors	Successors
	ENGD-1280	R&D IDENTIFIED DURING CONCEPTUAL DESIGN	1,434	01SEP08	27FEB14	ENGD-1300*	
	ENGD-1290	BASIC DATA	420*	01OCT07	08MAY09	ENGD-1300*	ENGD-1310, ENGD-1315*
	ENGD-1300	THERMODYNAMIC DATA	240	01OCT07	29AUG08		ENGD-1270*, ENGD-1280*, ENGD-1290*,
	ENGD-1310	REACTION KINETICS DATA	240	01OCT07	29AUG08	ENGD-1290, ENGD-1300*	ENGD-1315*
	ENGD-1315	DATA ANALYSIS AND MODEL	180	01SEP08	08MAY09	ENGD-1290*, ENGD-1310*	
	ENGD-1320	DECOMPOSER	1,485*	01OCT07	07JUN13	ENGD-1330*	ENGD-1345*, ENGD-1350
	ENGD-1330	CATALYST	480	01OCT07	31JUL09		ENGD-1320*, ENGD-1340*, ENGD-1780
	ENGD-1340	MATERIALS OF CONSTRUCTION	1,005	01OCT07	05AUG11	ENGD-1330*	CTST-1030*, ENGD-1345*, ENGD-1350*,
	ENGD-1345	PILOT TESTING	480	08AUG11	07JUN13	ENGD-1320*, ENGD-1340*	
	ENGD-1350	DESIGN CODE CASE	400	22MAR10	30SEP11	ENGD-1320, ENGD-1340*	ENGD-1780
	ENGD-1360	SULFURIC ACID CONCENTRATOR	240	24NOV08	23OCT09	ENGD-1300*	ENGD-1500*, ENGD-1780
	ENGD-1370	ELECTROLYZER	2,400*	01OCT07	09DEC16	ENGD-1380*	ENGD-1430, ENGD-1437*
	ENGD-1380	CATALYST LOADING TESTS	480	01OCT07	31JUL09		ENGD-1370*, ENGD-1390*, ENGD-1400*
	ENGD-1390	CELL MEMBRANE DEVELOPMENT	480	01OCT07	31JUL09	ENGD-1380*	ENGD-1400*
	ENGD-1400	HAND-OFF RESEARCH TO DEVELOPMENT LAB	0		31JUL09	ENGD-1380*, ENGD-1390*	ENGD-1410*
	ENGD-1410	CELL DEVELOPMENT	360	03AUG09	17DEC10	ENGD-1400*	ENGD-1420*
	ENGD-1420	PROTOTYPE CELL	360	20DEC10	04MAY12	ENGD-1410*	ENGD-1430*
	ENGD-1430	PILOT CELL	360	07MAY12	20SEP13	ENGD-1370, ENGD-1420*	CTST-1040, ENGD-1432*, ENGD-1450, ENGD-1780*
	ENGD-1432	PILOT PLANT	360	23SEP13	06FEB15	ENGD-1430*	ENGD-1435*
	ENGD-1435	HAND-OFF: DEVELOPMENT TO VENDOR	0		06FEB15	ENGD-1432*	ENGD-1437*
	ENGD-1437	BUILD FULL-SCALE DEMO AT IDAHO	480	09FEB15	09DEC16	ENGD-1370*, ENGD-1435*	
	ENGD-1440	FEED PURIFICATION	240*	01APR13	28FEB14	ENGD-1460*, ENGD-1470	ENGD-1490*
	ENGD-1450	SYSTEM TOLERANCE TO IMPURITIES	175*	01APR13	29NOV13	ENGD-1430, ENGD-1460*	ENGD-1470*
	ENGD-1460	DECOMPOSER	45	01APR13*	31MAY13		ENGD-1440*, ENGD-1450*, ENGD-1480, ENGD-1490
	ENGD-1470	ELECTROLYZER	44	01OCT13*	29NOV13	ENGD-1450*	ENGD-1440, ENGD-1480*, ENGD-1490*
	ENGD-1480	SULFURIC ACID PURIFICATION SYSTEM	65	02DEC13	28FEB14	ENGD-1460, ENGD-1470*	
	ENGD-1490	WATER PURIFICATION SYSTEM	65	02DEC13	28FEB14	ENGD-1440*, ENGD-1460, ENGD-1470*	ENGD-1510
	ENGD-1500	SO2 ABSORBERS	195	24NOV08	21AUG09	ENGD-1360*	
	ENGD-1510	PRODUCT PURIFICATION TESTING	86	06NOV15	04MAR16	CTST-1030, CTST-1040*, ENGD-1270*, ENGD-1340,	ENGD-1575*, ENGD-1850*
	ENGD-1520	OTHER MATERIALS	522	03NOV08*	02NOV10		ENGD-1540*, ENGD-1850
	ENGD-1530	SENSING & CONTROL	480*	27SEP10	27JUL12	ENGD-1540*	ENGD-1570*
	ENGD-1540	SENSOR PILOTING	240	27SEP10	26AUG11	ENGD-1520*	ENGD-1530*, ENGD-1560*
	ENGD-1560	VALVE DEVELOPMENT	240	27SEP10	26AUG11	ENGD-1540*	ENGD-1570*
	ENGD-1570	VALVE PILOTING	240	29AUG11	27JUL12	ENGD-1530*, ENGD-1560*	
	ENGD-1575	SUBMIT HPF R&D FINAL REPORT	0		04MAR16	ENGD-1010*, ENGD-1510*	
POWER CONVERSION FACILITY							
	ENGD-1585	PCF R&D PLAN	45	01OCT07	30NOV07		
2 22 PCS	ENGD-1590	PCS	1,307	01OCT07	02OCT12		ENGD-1595*
	ENGD-1595	SUBMIT PCF R&D FINAL REPORT	0		02OCT12	ENGD-1590*	
2 32 000 - CONCEPTUAL DESIGN							
2 32 000	ENGD-1600	CONCEPTUAL DESIGN	392*	01OCT07	31MAR09	ENGD-1610*	ENGD-1610*, ENGD-1645
2 32 PM2	ENGD-1610	PROJECT MANAGEMENT	392	01OCT07	31MAR09	ENGD-1600*	ENGD-1600*, ENGD-1620*, ENGD-1640*,
2 32 PSE	ENGD-1620	OVERALL PLANT INTEGRATION	392	01OCT07	31MAR09	ENGD-1610*	ENGD-1630*
2 32 BOP	ENGD-1630	OVERALL SITE & BOP	392	01OCT07	31MAR09	ENGD-1620*	
2 32 NHS	ENGD-1640	NUCLEAR HEAT SUPPLY FACILITY	2,154*	01OCT07	31DEC15	ENGD-1610*, ENGD-1642*	ENGD-1644*
	ENGD-1642	CONCEPTUAL ENGINEERING	392	01OCT07	31MAR09		ENGD-1640*, ENGD-1644*, ENGD-1770,
	ENGD-1644	ENGINEERING SUPPORT DURING R&D	1,762	01APR09	31DEC15	ENGD-1640*, ENGD-1642*	ENGD-1265*
	ENGD-1645	DOE MILESTONE CD-1	0		28SEP07	ENGD-1600	ENGD-1700
2 32 HPF	ENGD-1650	HYDROGEN PRODUCTION FACILITY	1,663*	01OCT07	12FEB14	ENGD-1660*	ENGD-1670*
	ENGD-1660	CONCEPTUAL ENGINEERING	392	01OCT07	31MAR09	ENGD-1610*	ENGD-1650*, ENGD-1670*, ENGD-1780
	ENGD-1670	ENGINEERING SUPPORT DURING R&D	1,271	01APR09	12FEB14	ENGD-1650*, ENGD-1660*	
	ENGD-1675	DOE MILESTONE CD-1A	0		19NOV08*		
2 32 PCF	ENGD-1680	POWER CONVERSION FACILITY	1,045*	01OCT07	30SEP11	ENGD-1685*	ENGD-1688*
	ENGD-1685	CONCEPTUAL ENGINEERING	392	01OCT07	31MAR09		ENGD-1680*, ENGD-1688*

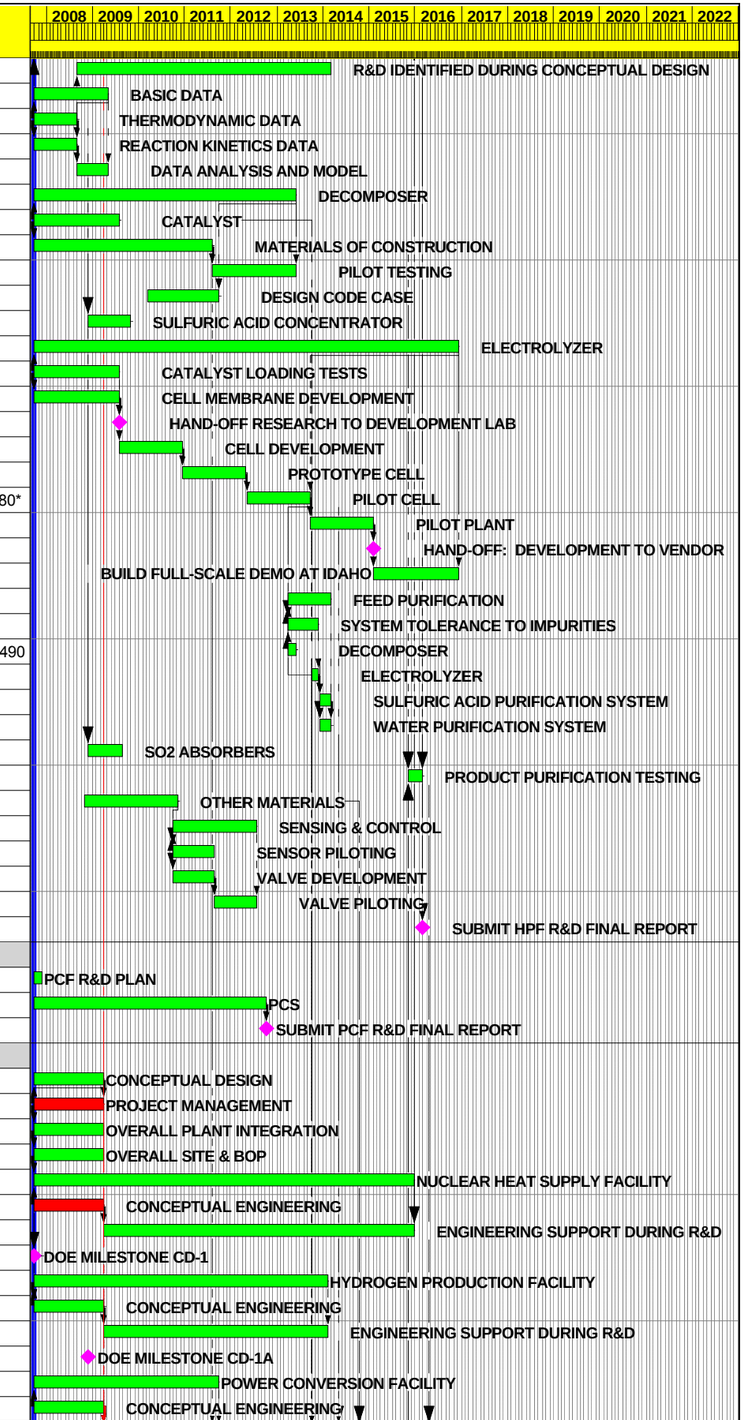

Start Date	01OCT07
Finish Date	29OCT21
Data Date	01OCT07
Run Date	18MAY07 14:17

Early Bar
Progress Bar
Critical Activity

© Primavera Systems, Inc.

NGNP

Sheet 2 of 8

PRECONCEPTUAL NGNP SCHEDULE

Date	Revision	Checked	Approved

WBS	Activity ID	Activity Description	Orig Dur	Early Start	Early Finish	Predecessors	Successors
	ENGD-1688	ENGINEERING SUPPORT DURING R&D	653	01APR09	30SEP11	ENGD-1680*, ENGD-1685*	
2 33 000 - PRELIMINARY DESIGN							
2 33 000	ENGD-1700	PRELIMINARY DESIGN	522*	01APR09	31MAR11	ENGD-1645, ENGD-1710*	ENGD-1710*, ENGD-1800
	ENGD-1705	Design Freeze to Support Final Safety	0		31MAR11	ENGD-1760*, ENGD-1770*, ENGD-1790*	ENGD-1740*
2 33 PM2	ENGD-1710	PROJECT MANAGEMENT	522	01APR09	31MAR11	ENGD-1610*, ENGD-1700*	ENGD-1700*, ENGD-1810*
2 33 PSE	ENGD-1720	OVERALL PLANT INTEGRATION	522*	01APR09	31MAR11	ENGD-1730*	ENGD-1730*
	ENGD-1730	PRELIMINARY ENGINEERING & SAFETY ANALYSIS	522	01APR09	31MAR11	ENGD-1610*, ENGD-1720*	ENGD-1720*, ENGD-1740*
	ENGD-1740	FINAL SAFETY ANALYSIS	218	01APR11	31JAN12	ENGD-1705*, ENGD-1730*	ELIC-1050*, ENGD-1750*
	ENGD-1750	PREPARE ISA SUMMARY	86	01FEB12	30MAY12	ENGD-1740*	ELIC-1050*
2 33 BOP	ENGD-1760	OVERALL SITE & BOP	522	01APR09	31MAR11	ENGD-1610*	ENGD-1705*
2 33 NHS	ENGD-1770	NUCLEAR HEAT SUPPLY FACILITY	521	02APR09	31MAR11	ENGD-1642, REFC-1000*	ENGD-1705*, ENGD-1795*
2 33 HPF	ENGD-1780	HYDROGEN PRODUCTION FACILITY	262	30SEP13	30SEP14	ENGD-1330, ENGD-1340, ENGD-1350, ENGD-1360,	ENGD-1798*, ENGD-1850
2 33 PCF	ENGD-1790	POWER CONVERSION FACILITY	522	01APR09	31MAR11	ENGD-1642*	ENGD-1705*
	ENGD-1795	DOE MILESTONE CD-2	0		31MAR11	ENGD-1770*	
	ENGD-1798	DOE MILESTONE CD-2A	0		30SEP14	ENGD-1780*	
2 34 000 - FINAL DESIGN							
2 34 000	ENGD-1800	FINAL DESIGN	782*	01APR11	31MAR14	ENGD-1700, ENGD-1810*	ENGD-1860*, ENGD-1870
2 34 PM2	ENGD-1810	PROJECT MANAGEMENT	782	01APR11	31MAR14	ENGD-1710*	ENGD-1800*, ENGD-1820*, ENGD-1830*,
2 34 PSE	ENGD-1820	OVERALL PLANT INTEGRATION	782	01APR11	31MAR14	ENGD-1810*	
2 34 BOP	ENGD-1830	OVERALL SITE & BOP	782	01APR11	31MAR14	ENGD-1810*	
2 34 NHS	ENGD-1840	NUCLEAR HEAT SUPPLY FACILITY	782	01APR11	31MAR14	ENGD-1810*	
2 34 HPF	ENGD-1850	HYDROGEN PRODUCTION FACILITY	392	16OCT14	15APR16	ENGD-1510*, ENGD-1520, ENGD-1780	ENGD-1880*
2 34 PCF	ENGD-1860	POWER CONVERSION FACILITY	782	01APR11	31MAR14	ENGD-1800*, ENGD-1810*	
	ENGD-1870	DOE MILESTONE CD-3	0	01JUL13		ELIC-1220*, ENGD-1800	
	ENGD-1880	DOE MILESTONE CD-3A	0	18APR16		ENGD-1850*	
ACQUISITION STRATEGIES & LONG LEAD PROCUREMENT							
2 36 000	EACQ-1000	ACQUISITION STRATEGIES	2,109*	01OCT09	31OCT17	EACQ-1380*	EACQ-1290*
2 36 PM2	EACQ-1010	PROJECT MANAGEMENT	2,109*	01OCT09	31OCT17	EACQ-1380*	EACQ-1290*
2 36 BOP	EACQ-1020	OVERALL SITE & BOP	587*	02JUL12	30SEP14	EACQ-1022*	EACQ-1025*
	EACQ-1022	WASTEWATER EVAPORATOR	587*	02JUL12	30SEP14	EACQ-1024*	EACQ-1020*, EACQ-1025*
2 36 BOP	EACQ-1024	ACQUISITION STRATEGY DEVELOPMENT	65	02JUL12*	28SEP12		EACQ-1022*, EACQ-1025*, EACQ-1028*
2 36 BOP	EACQ-1025	ORDER MATERIAL, MANUF, TRANSPORT	522	01OCT12	30SEP14	EACQ-1020*, EACQ-1022*, EACQ-1024*	EACQ-1026*
2 36 BOP	EACQ-1026	EVAPORATOR ONSITE	0		30SEP14	EACQ-1025*	
	EACQ-1027	CONSTRUCTION CONTRACT	1	01OCT07	01OCT07		
	EACQ-1028	SITEWORK	195	04JUN12	01MAR13	EACQ-1024*	CNST-1015*, CNST-1020
2 36 NHS	EACQ-1030	NUCLEAR HEAT SUPPLY FACILITY	2,109*	01OCT09	31OCT17	EACQ-1380*	EACQ-1290*
	EACQ-1200	TRAINING SIMULATOR	937*	01APR13	01NOV16	EACQ-1210*	EACQ-1230*
2 36 NHS	EACQ-1210	ACQUISITION STRATEGY DEVELOPMENT	131	01APR13*	30SEP13		EACQ-1200*, EACQ-1220*
2 38 NHS	EACQ-1220	ORDER SIMULATOR	0		01OCT13	EACQ-1210*	EACQ-1230*
2 38 NHS	EACQ-1230	MANUFACTURING, PROGRAMMING, TRANSPORT	805	02OCT13	01NOV16	EACQ-1200*, EACQ-1220*	EACQ-1240*
2 38 NHS	EACQ-1240	SIMULATOR ON-SITE	0		01NOV16	EACQ-1230*	
	EACQ-1250	PBMR REACTOR FUEL	1,218*	01MAR13	31OCT17	EACQ-1260*	EACQ-1290*
2 36 NHS	EACQ-1260	ACQUISITION STRATEGY DEVELOPMENT	131	01MAR13*	30AUG13		EACQ-1250*, EACQ-1270*
2 38 NHS	EACQ-1270	ORDER PBMR FUEL	0		30AUG13	EACQ-1260*	
2 38 NHS	EACQ-1280	MANUFACTURING	500	01SEP15*	31JUL17		EACQ-1290*
2 38 NHS	EACQ-1290	TRANSPORT TO SITE	66	01AUG17	31OCT17	EACQ-1000*, EACQ-1010*, EACQ-1030*,	EACQ-1300*
2 38 NHS	EACQ-1300	FUEL ONSITE	0		31OCT17	EACQ-1290*	
	EACQ-1370	REACTOR PRESSURE VESSEL	1,499*	01OCT09	30JUN15	EACQ-1380*	EACQ-1410*
2 36 NHS	EACQ-1380	ACQUISITION STRATEGY DEVELOPMENT	130	01OCT09*	31MAR10		EACQ-1000*, EACQ-1010*, EACQ-1030*,
2 38 NHS	EACQ-1390	ORDER MATERIAL	261	01APR10	31MAR11	EACQ-1380*	EACQ-1400*
2 38 NHS	EACQ-1400	MANUFACTURING	1,043	01APR11	31MAR15	EACQ-1390*	EACQ-1410*
2 38 NHS	EACQ-1410	TRANSPORT TO SITE	65	01APR15	30JUN15	EACQ-1370*, EACQ-1400*	EACQ-1420*
2 38 NHS	EACQ-1420	PRESSURE VESSEL ONSITE	0		30JUN15	EACQ-1410*	
	EACQ-1430	HELIUM PRESSURE BOUNDARY	868*	02DEC11	31MAR15	EACQ-1440*	EACQ-1490*

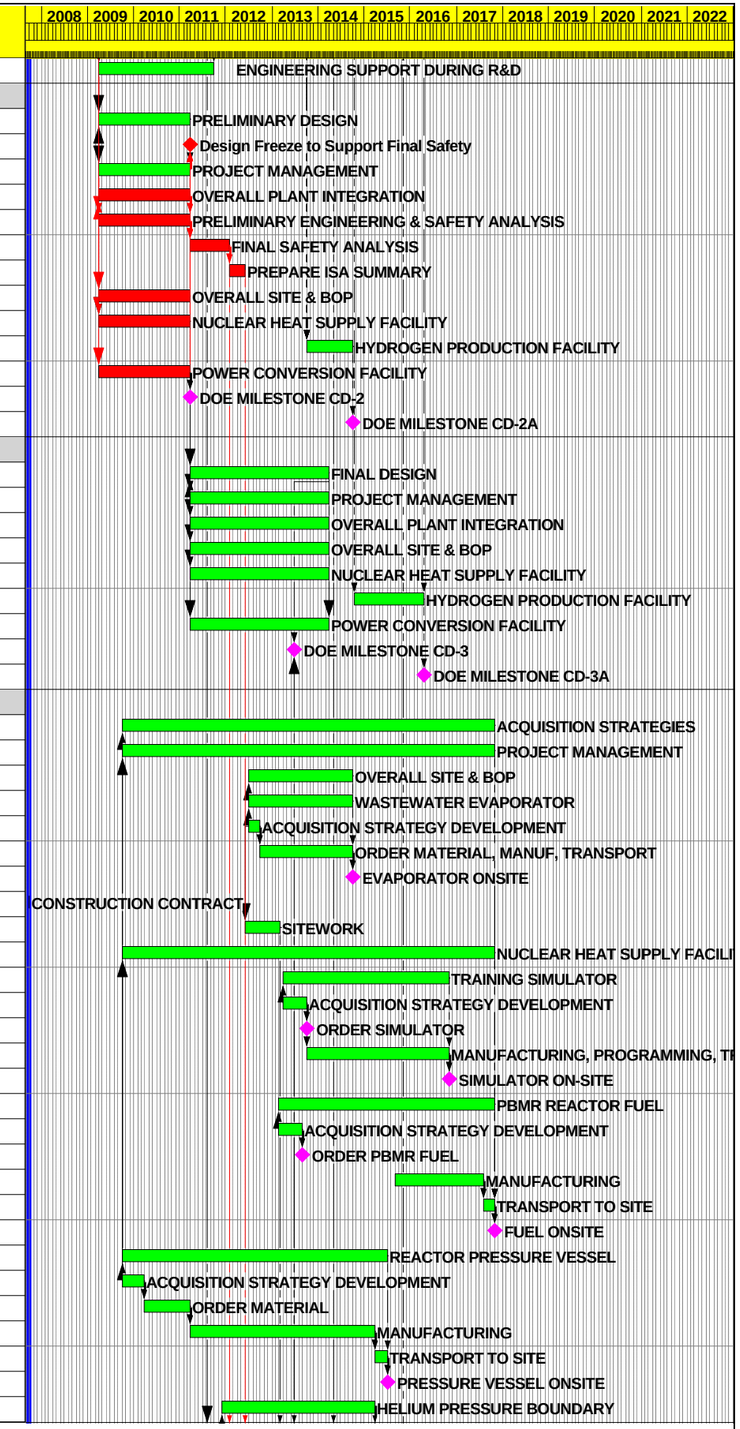

Start Date	01OCT07
Finish Date	29OCT21
Data Date	01OCT07
Run Date	18MAY07 14:17

Early Bar
Progress Bar
Critical Activity

NGNP

Sheet 3 of 8

PRECONCEPTUAL NGNP SCHEDULE

Date	Revision	Checked	Approved

© Primavera Systems, Inc.

WBS	Activity ID	Activity Description	Orig Dur	Early Start	Early Finish	Predecessors	Successors
2 36 NHS	EACQ-1440	ACQUISITION STRATEGY DEVELOPMENT	130	02DEC11*	31MAY12		EACQ-1430*, EACQ-1450*
2 38 NHS	EACQ-1450	ORDER MATERIAL	261	01JUN12	31MAY13	EACQ-1440*	EACQ-1460*
2 38 NHS	EACQ-1460	MANUFACTURING	347	03JUN13	30SEP14	EACQ-1450*	EACQ-1470*
2 38 NHS	EACQ-1470	HOT GAS DUCT INTEGRATION	66	01OCT14	31DEC14	EACQ-1460*	EACQ-1480*
2 38 NHS	EACQ-1480	TRANSPORT TO SITE	64	01JAN15	31MAR15	EACQ-1470*	EACQ-1490*
2 38 NHS	EACQ-1490	PRESSURE BOUNDARY ONSITE	0		31MAR15	EACQ-1430*, EACQ-1480*	
	EACQ-1500	CORE BARREL ASSEMBLY (CBA)	1,109*	02APR12	30JUN16	EACQ-1510*	EACQ-1540*
2 36 NHS	EACQ-1510	ACQUISITION STRATEGY DEVELOPMENT	130	02APR12*	28SEP12		EACQ-1500*, EACQ-1520*
2 38 NHS	EACQ-1520	ORDER LLI FOR CORE BARREL ASSEMBLY	435	01OCT12	30MAY14	EACQ-1510*	EACQ-1530*
2 38 NHS	EACQ-1530	CBA MANUFACTURING	479	02JUN14	31MAR16	EACQ-1520*	EACQ-1540*
2 38 NHS	EACQ-1540	TRANSPORT TO SITE	65	01APR16	30JUN16	EACQ-1500*, EACQ-1530*	EACQ-1550*
2 38 NHS	EACQ-1550	CBA ONSITE	0		30JUN16	EACQ-1540*	
	EACQ-1560	CORE STRUCTURE CERAMICS (CSC) - GRAPHITE	1	01DEC11	01DEC11	EACQ-1570*	EACQ-1600
2 36 NHS	EACQ-1570	ACQUISITION STRATEGY DEVELOPMENT	131	01DEC11*	31MAY12		EACQ-1560*, EACQ-1580
2 38 NHS	EACQ-1580	ORDER COKE & FEEDSTOCK	435	01OCT12*	30MAY14	EACQ-1570	EACQ-1590*
2 38 NHS	EACQ-1590	CSC MANUFACTURING	479	02JUN14	31MAR16	EACQ-1580*	EACQ-1600*
2 38 NHS	EACQ-1600	TRANSPORT TO SITE	65	01APR16	30JUN16	EACQ-1560, EACQ-1590*	EACQ-1610*
2 38 NHS	EACQ-1610	CSC ONSITE	0		30JUN16	EACQ-1600*	
	EACQ-1620	INTERMEDIATE HEAT EXCHANGER (IHX)	1,239*	01JUL11	30MAR16	EACQ-1630*	EACQ-1660*
2 36 NHS	EACQ-1630	ACQUISITION STRATEGY DEVELOPMENT	131	01JUL11*	30DEC11		EACQ-1620*, EACQ-1640*
2 38 NHS	EACQ-1640	PLACE ORDER	261	02JAN12	31DEC12	EACQ-1630*	EACQ-1650*
2 38 NHS	EACQ-1650	MANUFACTURING	783	01JAN13	31DEC15	EACQ-1640*	EACQ-1660*
2 38 NHS	EACQ-1660	TRANSPORT TO SITE	64	01JAN16	30MAR16	EACQ-1620*, EACQ-1650*	EACQ-1670*
2 38 NHS	EACQ-1670	IHX ONSITE	0		30MAR16	EACQ-1660*	
	EACQ-1680	FUEL HANDLING & STORAGE SYSTEM (FHS)	457*	01MAY14	29JAN16	EACQ-1690*	EACQ-1700*
2 36 NHS	EACQ-1690	ACQUISITION STRATEGY DEVELOPMENT	66	01MAY14*	31JUL14		EACQ-1680*, EACQ-1700*
2 38 NHS	EACQ-1700	ORDER MATERIAL, MANUF, TRANSPORT	391	01AUG14	29JAN16	EACQ-1680*, EACQ-1690*	EACQ-1710*
2 38 NHS	EACQ-1710	FHS ONSITE	0		29JAN16	EACQ-1700*	
	EACQ-1720	HELIUM SERVICES SYSTEM (HSS)	978*	01AUG12	29APR16	EACQ-1730*	EACQ-1760*
2 36 NHS	EACQ-1730	ACQUISITION STRATEGY DEVELOPMENT	132	01AUG12*	31JAN13		EACQ-1720*, EACQ-1740*
2 38 NHS	EACQ-1740	ORDER MATERIAL	261	01FEB13	31JAN14	EACQ-1730*	EACQ-1750*
2 38 NHS	EACQ-1750	MANUFACTURING	520	03FEB14	29JAN16	EACQ-1740*	EACQ-1760*
2 38 NHS	EACQ-1760	TRANSPORT TO SITE	65	01FEB16	29APR16	EACQ-1720*, EACQ-1750*	EACQ-1770*
2 38 NHS	EACQ-1770	HSS ONSITE	0		29APR16	EACQ-1760*	
	EACQ-1780	CONSTRUCTION CONTRACTS	520*	03FEB14	29JAN16	EACQ-1790*	EACQ-1810*
	EACQ-1790	CIVIL	195	03FEB14*	31OCT14		CNST-1100*, EACQ-1780*
	EACQ-1800	PROCESS PIPING, EQUIPMENT, MECHANICAL	261	01OCT14*	30SEP15		CNST-1140*
	EACQ-1810	ELECTRICAL	196	01MAY15*	29JAN16	EACQ-1780*	CNST-1220*
	EACQ-1820	INSTRUMENTATION & CONTROL	196	30APR15*	28JAN16		CNST-1250*
	EACQ-1830	HYDROGEN PRODUCTION FACILITY	915*	01APR13	30SEP16	EACQ-1850*	EACQ-1860*
	EACQ-1840	DECOMPOSITION REACTOR & SYSTEM	915*	01APR13	30SEP16	EACQ-1850*	EACQ-1860*
2 36 HPS	EACQ-1850	ACQUSITION STRATEGY DEVELOPMENT	131	01APR13*	30SEP13		EACQ-1830*, EACQ-1840*, EACQ-1860*
2 38 HPS	EACQ-1860	ORDER MATERIAL, MANUF, TRANSPORT	784	01OCT13	30SEP16	EACQ-1830*, EACQ-1840*, EACQ-1850*	EACQ-1870*
2 38 HPS	EACQ-1870	DECOMPOSER ONSITE	0		30SEP16	EACQ-1860*	
	EACQ-1880	CONSTRUTION CONTRACTS HPF	327*	01OCT15	30DEC16	EACQ-1890*	EACQ-1910*
	EACQ-1890	BUILDINGS & BALANCE OF PLANT	131	01OCT15*	31MAR16		CNST-1285*, CNST-1290, EACQ-1880*
	EACQ-1900	PROCESS PIPING, EQUIPMENT, MECHANICAL	197	01JUL15*	31MAR16		CNST-1310*
	EACQ-1910	ELECTRICAL	131	01JUL16*	30DEC16	EACQ-1880*	CNST-1345*, CNST-1350
	EACQ-1920	INSTRUMENTATION & CONTROLS	131	30JUN16*	29DEC16		CNST-1355*, CNST-1360
	EACQ-1930	POWER CONVERSION FACILITY	848*	01JUL11	30SEP14	EACQ-1950*	EACQ-2010*
	EACQ-1940	AIR COOLED CONDENSER (ACC)	848*	01JUL11	30SEP14	EACQ-1950*	EACQ-1960*
2 36 PCS	EACQ-1950	ACQUISITION STRATEGY DEVELOPMENT	66	01JUL11*	30SEP11		EACQ-1930*, EACQ-1940*, EACQ-1960*
2 38 PCS	EACQ-1960	ORDER MATERIAL, MANUF, TRANSPORT	782	03OCT11	30SEP14	EACQ-1940*, EACQ-1950*	EACQ-1970*
2 38 PCS	EACQ-1970	ACC ONSITE	0		30SEP14	EACQ-1960*	

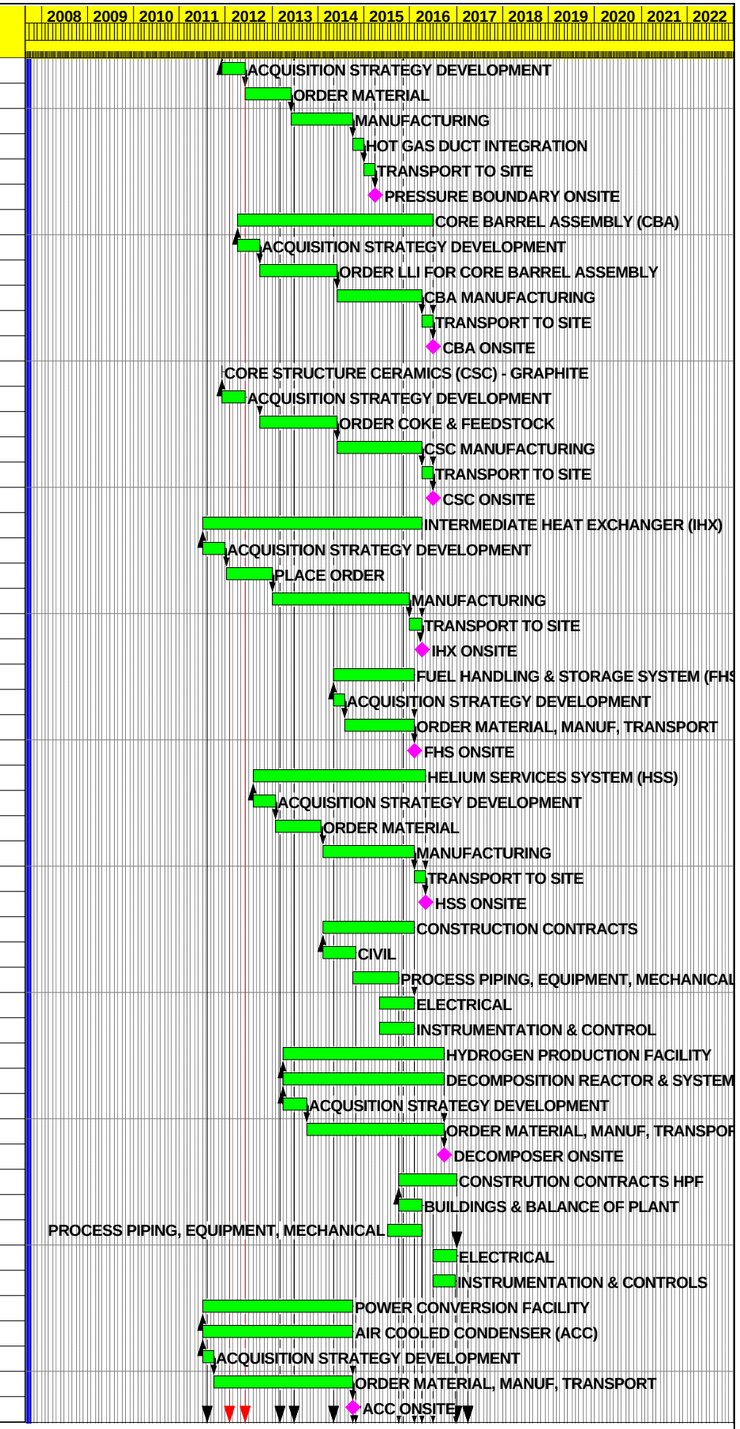

Start Date	01OCT07
Finish Date	29OCT21
Data Date	01OCT07
Run Date	18MAY07 14:17

Early Bar
Progress Bar
Critical Activity

NGNP

Sheet 4 of 8

PRECONCEPTUAL NGNP SCHEDULE

Date	Revision	Checked	Approved

© Primavera Systems, Inc.

WBS	Activity ID	Activity Description	Orig Dur	Early Start	Early Finish	Predecessors	Successors
	EACQ-1980	TURBO MACHINERY	913*	01APR11	30SEP14	EACQ-1990*	EACQ-2000*
2 36 PCS	EACQ-1990	ACQUISITION STRATEGY DEVELOPMENT	65	01APR11*	30JUN11		EACQ-1980*, EACQ-2000*
2 38 PCS	EACQ-2000	ORDER MATERIAL, MANUF, TRANSPORT	848	01JUL11	30SEP14	EACQ-1980*, EACQ-1990*	EACQ-2010*
2 38 PCS	EACQ-2010	TURBO MACHINERY ONSITE	0		30SEP14	EACQ-1930*, EACQ-2000*	
	EACQ-2020	STEAM GENERATOR (SG)	1,317*	16MAY11	31MAY16	EACQ-2030*	EACQ-2040*
2 36 PCS	EACQ-2030	ACQUISITION STRATEGY DEVELOPMENT	66	16MAY11*	15AUG11		EACQ-2020*, EACQ-2040*
2 38 PCS	EACQ-2040	ORDER MATERIAL, MANUF, TRANSPORT	1,251	16AUG11	31MAY16	EACQ-2020*, EACQ-2030*	EACQ-2050*
2 38 PCS	EACQ-2050	SG ONSITE	0		31MAY16	EACQ-2040*	
	EACQ-2060	FEED WATER HEATERS	717*	02JAN12	30SEP14	EACQ-2070*	EACQ-2080*
2 36 PCS	EACQ-2070	ACQUISITION STRATEGY DEVELOPMENT	65	02JAN12*	30MAR12		EACQ-2060*, EACQ-2080*
2 38 PCS	EACQ-2080	ORDER MATERIAL, MANUF, TRANSPORT	652	02APR12	30SEP14	EACQ-2060*, EACQ-2070*	EACQ-2090*
2 38 PCS	EACQ-2090	FEED WATER HEATERS ONSITE	0		30SEP14	EACQ-2080*	
	EACQ-2100	CONSENSATE/FEEDWATER PUMPS	848*	01JUL11	30SEP14	EACQ-2110*	EACQ-2120*
2 36 PCS	EACQ-2110	ACQUISITION STRATEGY DEVELOPMENT	66	01JUL11*	30SEP11		EACQ-2100*, EACQ-2120*
2 38 PCS	EACQ-2120	ORDER MATERIAL, MANUF, TRANSPORT	782	03OCT11	30SEP14	EACQ-2100*, EACQ-2110*	EACQ-2130*
2 38 PCS	EACQ-2130	CONDENSATE/FEEDWATER PUMPS ONSITE	0		30SEP14	EACQ-2120*	
	EACQ-2140	DEAERATOR	717*	02JAN12	30SEP14	EACQ-2150*	EACQ-2160*
2 36 PCS	EACQ-2150	ACQUISITION STRATEGY DEVELOPMENT	65	02JAN12*	30MAR12		EACQ-2140*, EACQ-2160*
2 38 PCS	EACQ-2160	ORDER MATERIAL, MANUF, TRANSPORT	652	02APR12	30SEP14	EACQ-2140*, EACQ-2150*	EACQ-2170*
2 38 PCS	EACQ-2170	DEAERATOR ONSITE	0		30SEP14	EACQ-2160*	
2 41 000 - LICENSING & PERMITTING TO CONSTRUCT							
2 41 PM2	ELIC-1010	PROJECT MANAGEMENT	2,480*	01OCT07	31MAR17	ELIC-1020*	ELIC-1420*
2 41 NRC	ELIC-1020	NRC LICENSING/STATE LOCAL PERMITS	2,480*	01OCT07	31MAR17	ELIC-1022*	ELIC-1010*, ELIC-1420*
	ELIC-1022	REGULATORY MANAGEMENT PLAN PREPARATION/ISSUE	328	01OCT07	31DEC08		ELIC-1020*
	ELIC-1025	PREAPPLICATION INTERACTIONS WITH NRC	1,110	01OCT07	30DEC11		
	ELIC-1030	APPLICATIONS PREPARATION	957	01OCT07	31MAY11		
	ELIC-1040	NGNP COL APPLICATION	1	01OCT07	01OCT07		
	ELIC-1050	PREPARATION COL APPLICATION	86	01FEB12	30MAY12	ENGD-1740*, ENGD-1750*	ELIC-1055*, ELIC-1250*
	ELIC-1055	SUBMIT COL APPLICATION	0		30MAY12	ELIC-1050*	ELIC-1250*
	ELIC-1060	NGNP EARLY SITE PERMIT/LWA APPLICATION	1,045*	01OCT07	30SEP11	ELIC-1080*	ELIC-1095*
	ELIC-1070	SITE GEOTECHNICAL INVESTIGATION	522	01JUL08	30JUN10	ELIC-1080*	ELIC-1090*
	ELIC-1080	ENVIRONMENTAL ANALYSIS	653	01OCT07	31MAR10		ELIC-1060*, ELIC-1070*, ELIC-1090
	ELIC-1090	APPLICATION PREPARATION	327	01JUL10	30SEP11	ELIC-1070*, ELIC-1080	ELIC-1095*
	ELIC-1095	SUBMIT ESP APPLICATION	0		30SEP11	ELIC-1060*, ELIC-1090*	ELIC-1110*
	ELIC-1100	NRC REVIEW	957*	03OCT11	02JUN15	ELIC-1110*	ELIC-1110, ELIC-1250*
	ELIC-1110	NRC REVIEW OF EARLY SITE PERMIT APPLICATION	455	03OCT11	28JUN13	ELIC-1095*, ELIC-1100	ELIC-1100*, ELIC-1130*
	ELIC-1120	SAFETY REVIEW	260*	03OCT11	28SEP12	ELIC-1130*	ELIC-1150*
	ELIC-1130	DOCKETING REVIEW	21	03OCT11	31OCT11	ELIC-1110*	ELIC-1120*, ELIC-1140*, ELIC-1170*
	ELIC-1140	STAFF REVIEW - DRAFT SER	109	01NOV11	30MAR12	ELIC-1130*	ELIC-1150*
	ELIC-1150	STAFF REVIEW - FINAL SER	130	02APR12	28SEP12	ELIC-1120*, ELIC-1140*	
	ELIC-1160	ENVIRONMENTAL REVIEW	260*	03OCT11	28SEP12	ELIC-1170*	ELIC-1190*
	ELIC-1170	NOTICE OF INTENT TO PREPARE EIS	21	03OCT11	31OCT11	ELIC-1130*	ELIC-1160*, ELIC-1180*
	ELIC-1180	DRAFT EIS	109	01NOV11	30MAR12	ELIC-1170*	ELIC-1190*
	ELIC-1190	FINAL EIS	130	02APR12	28SEP12	ELIC-1160*, ELIC-1180*	
	ELIC-1200	ACRS REVIEW	175	01MAR12*	31OCT12		ELIC-1210*
	ELIC-1210	ADMINISTRATIVE REVIEW	172	01NOV12	28JUN13	ELIC-1200*	ELIC-1220*
	ELIC-1220	RECEIPT OF ESP/LWA DECISION	0		28JUN13	ELIC-1210*	CNST-1020*, ENGD-1870*
	ELIC-1250	NRC REVIEW OF COL APPLICATION	784	31MAY12	02JUN15	ELIC-1050*, ELIC-1055*, ELIC-1100*	CNST-1110*, CNST-1120*, ELIC-1270*
	ELIC-1260	TECHNICAL REVIEW	542*	31MAY12	27JUN14	ELIC-1270*	ELIC-1355*
	ELIC-1270	DOCKETING REVIEW	21	31MAY12	28JUN12	ELIC-1250*	ELIC-1260*, ELIC-1280*
	ELIC-1280	NRC REVIEW, DEVELOPS RAIs	195	29JUN12	28MAR13	ELIC-1270*	ELIC-1290*, ELIC-1300*
	ELIC-1290	NRC ISSUES 1ST ROUND OF RAIs	0		28MAR13	ELIC-1280*	
	ELIC-1300	NGNP PROJECT RESPONSE PERIOD	45	29MAR13	30MAY13	ELIC-1280*	ELIC-1310*
	ELIC-1310	NRC ISSUES 2ND ROUND OF RAIs	86	31MAY13	27SEP13	ELIC-1300*	ELIC-1320*, ELIC-1360*

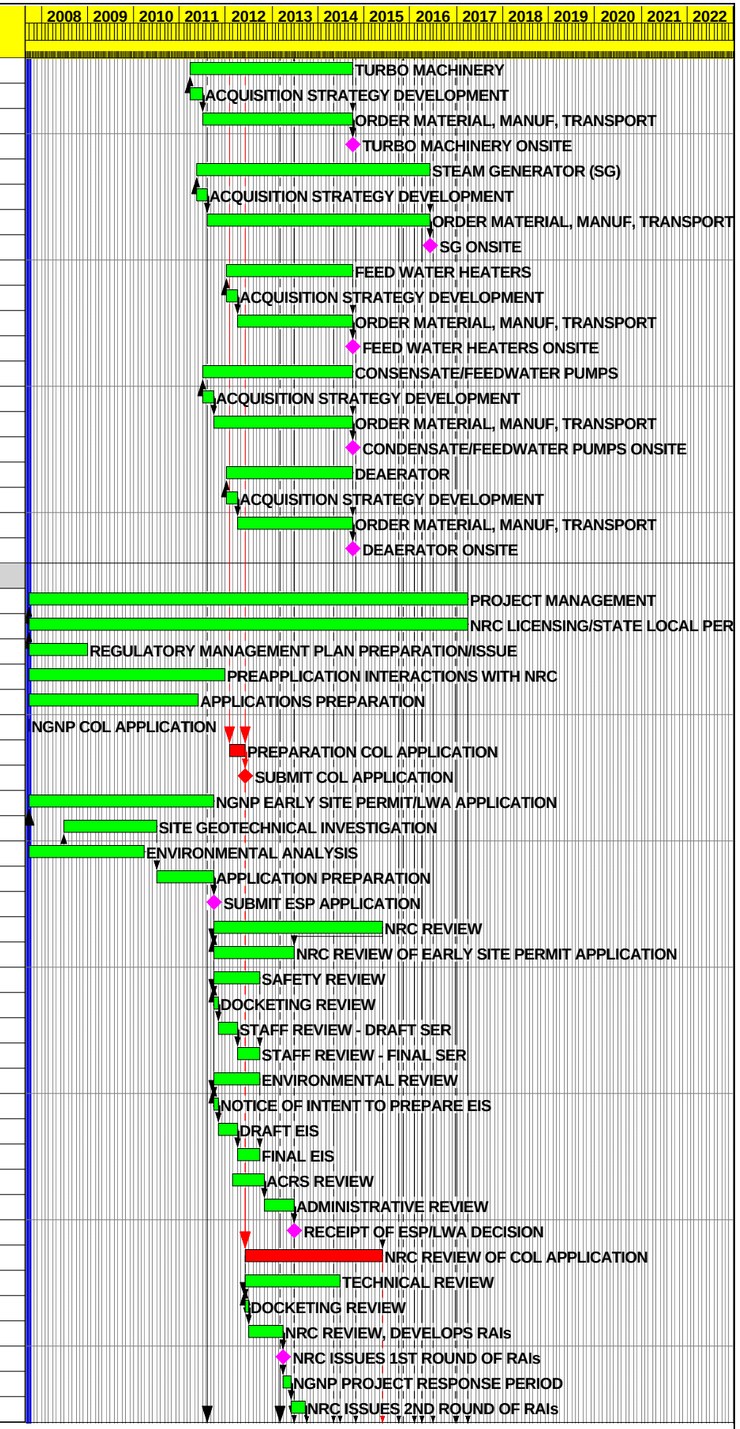

Start Date	01OCT07
Finish Date	29OCT21
Data Date	01OCT07
Run Date	18MAY07 14:17

Early Bar
Progress Bar
Critical Activity

© Primavera Systems, Inc.

NGNP

Sheet 5 of 8

PRECONCEPTUAL NGNP SCHEDULE

Date	Revision	Checked	Approved

WBS	Activity ID	Activity Description	Orig Dur	Early Start	Early Finish	Predecessors	Successors
	ELIC-1320	NGNP PROJECT RESPONSE PERIOD	66	30SEP13	30DEC13	ELIC-1310*	ELIC-1330*, ELIC-1340*
	ELIC-1330	DRAFT SER ISSUED	0		30DEC13	ELIC-1320*	
	ELIC-1340	NGNP PROJECT REVIEW OF SER	64	31DEC13	28MAR14	ELIC-1320*	ELIC-1350*
	ELIC-1350	NRC PREPARES FINAL SER	65	31MAR14	27JUN14	ELIC-1340*	ELIC-1355*
	ELIC-1355	END OF TECHNICAL REVIEW	0		27JUN14	ELIC-1260*, ELIC-1350*	
	ELIC-1360	NGNP MEETINGS WITH NRC STAFF & ACRS	218	30SEP13	30JUL14	ELIC-1310*	ELIC-1370*
	ELIC-1370	ADMINISTRATIVE REVIEW, MANDATORY HEARING	216	31JUL14	28MAY15	ELIC-1360*	CLIC-1020*, ELIC-1375*
	ELIC-1375	END OF ADMINISTRATIVE REVIEW	0		28MAY15	ELIC-1370*	ELIC-1379*
	ELIC-1379	COL DECISION TO START CONSTRUCTION	0	29MAY15		ELIC-1375*	CNST-1110
2 41 SLE	ELIC-1380	STATE/LOCAL ENVIRONMENTAL PERMITS	1,696*	01OCT09	31MAR16	ELIC-1390*	ELIC-1475*
	ELIC-1390	NHSF, PCF & BALANCE OF PLANT	782*	01OCT09	28SEP12	ELIC-1400*	ELIC-1380*, ELIC-1410*
	ELIC-1400	PREPARE PERMITS	261	01OCT09*	30SEP10		ELIC-1390*, ELIC-1410*
	ELIC-1410	STATE/LOCAL AGENCY REVIEW	521	01OCT10	28SEP12	ELIC-1390*, ELIC-1400*	ELIC-1415*
	ELIC-1415	ENVIRONMENTAL PERMITS ISSUED	0		28SEP12	ELIC-1410*	
	ELIC-1420	PERMITS FOR OPERATION	587*	01JAN15	31MAR17	ELIC-1010*, ELIC-1020*, ELIC-1430*	ELIC-1440*
	ELIC-1430	PREPARE PERMITS FOR OPERATION	195	01JAN15*	30SEP15		ELIC-1420*, ELIC-1440*
	ELIC-1440	STATE/LOCAL AGENCY REVIEW FOR OPERATION	392	01OCT15	31MAR17	CNST-1380, ELIC-1420*, ELIC-1430*	
	ELIC-1450	HYDROGEN PRODUCTION FACILITY	392*	01OCT14	31MAR16	ELIC-1460*	ELIC-1470*
	ELIC-1460	PERMIT PREPARATION	66	01OCT14*	31DEC14		ELIC-1450*, ELIC-1470*
	ELIC-1470	STATE/LOCAL AGENCY REVIEW	326	01JAN15	31MAR16	ELIC-1450*, ELIC-1460*	ELIC-1475*
	ELIC-1475	HYDROGEN PLANT ENV. PERMITS ISSUED	0		31MAR16	ELIC-1380*, ELIC-1470*	CNST-1290
3 00 000 - CONSTRUCTION							
3 42 000 - LICENSE & PERMIT TO OPERATE							
3 42 PM2	CLIC-1000	PROJECT MANAGEMENT	871*	29MAY15	28SEP18	CLIC-1020*	CLIC-1020*
3 42 NHS	CLIC-1010	NUCLEAR HEAT SUPPLY FACILITY	1	01OCT07	01OCT07		
	CLIC-1020	NRC INSPECTION DURING CONSTRUCTION	871	29MAY15	28SEP18	CLIC-1000*, ELIC-1370*	CLIC-1000*
3 52 000 - CONSTRUCTION							
3 52 PM2	CNST-1000	PROJECT MANAGMENT	1,044*	29SEP14	27SEP18	CNST-1030*	IOPR-1220*
	CNST-1001	OWNER'S STARTUP COSTS	717	01JAN15*	29SEP17		
	CNST-1002	OVERALL SITE & BOP	1,110*	01JUL13	29SEP17	CNST-1020*	CNST-1080*
	CNST-1004	NHSF	803*	03NOV14	29NOV17	CNST-1100*	CNST-1230*
	CNST-1006	HPF	391*	01JUL16	29DEC17	CNST-1290*	CNST-1350*
	CNST-1008	PCS	611*	29MAY15	29SEP17	CNST-1390*	CNST-1460*
OVERALL SITE & BOP							
3 52 BOP	CNST-1010	OVERALL SITE & BOP	1,195*	04MAR13	29SEP17	CNST-1015*	CNST-1080*
	CNST-1015	MOBILIZE SITEWORK CONTRACTOR	65	04MAR13	31MAY13	EACQ-1028*	CNST-1010*, CNST-1020
	CNST-1020	SITE PREPARATION & FOUNDATIONS	325	01JUL13	26SEP14	CNST-1015, EACQ-1028, ELIC-1220*	CNST-1002*, CNST-1030*
	CNST-1030	BUILDINGS & BALANCE OF PLANT	436	29SEP14	30MAY16	CNST-1020*	CNST-1000*, CNST-1040, CNST-1050*, CNST-1060*,
	CNST-1040	PROCESS PIPING, EQUIPMENT INSTALLATION, MECH.	435*	31MAY16	29JAN18	CNST-1030, CNST-1050*	CNST-1060*, CNST-1080
	CNST-1050	AUXILIARIES	435	31MAY16	29JAN18	CNST-1030*, CNST-1140	CNST-1040*
	CNST-1060	PIPELINES & INTERCONNECTIONS	435	31MAY16	29JAN18	CNST-1030*, CNST-1040*, CNST-1140	
	CNST-1070	SUBSTATION & POWER DISTRIBUTION	391	31MAY16	28NOV17	CNST-1030*, CNST-1140	
	CNST-1080	INSTRUMENTATION & CONTROLS	391	01APR16	29SEP17	CNST-1002*, CNST-1010*, CNST-1040, CNST-1140*	IOPR-1030*
NUCLEAR HEAT SUPPLY FACILITY							
3 52 NHS	CNST-1090	NUCLEAR HEAT SUPPLY FACILITY	824*	03JUN15	30JUL18	CNST-1110*	CNST-1270*
	CNST-1100	CIVIL MOBILIZATION	150	03NOV14	29MAY15	EACQ-1790*	CNST-1004*, CNST-1110, CNST-1120
	CNST-1110	CIVILS	283	03JUN15	01JUL16	CNST-1100, ELIC-1250*, ELIC-1379	CNST-1090*
	CNST-1120	CONSTRUCTION BUILDING & FACILITIES	651	03JUN15	29NOV17	CNST-1100, ELIC-1250*	IOPR-1050*
	CNST-1130	PROCESS PIPING, EQUIPMENT INSTALLATION, MECH	566*	01OCT15	30NOV17	CNST-1140*	CNST-1200*
	CNST-1140	MOBILIZE MECH	131	01OCT15	31MAR16	EACQ-1800*	CNST-1050, CNST-1060, CNST-1070, CNST-1080*,
	CNST-1150	AUXILIARIES	435	01APR16	30NOV17	CNST-1140*	
	CNST-1160	REACTOR SYSTEMS	435	01APR16	30NOV17	CNST-1140*	
	CNST-1170	MAIN SUPPORT SYSTEMS	435	01APR16	30NOV17	CNST-1140*	
	CNST-1180	SPECIAL TOOLS & EHS	435	01APR16	30NOV17	CNST-1140*	

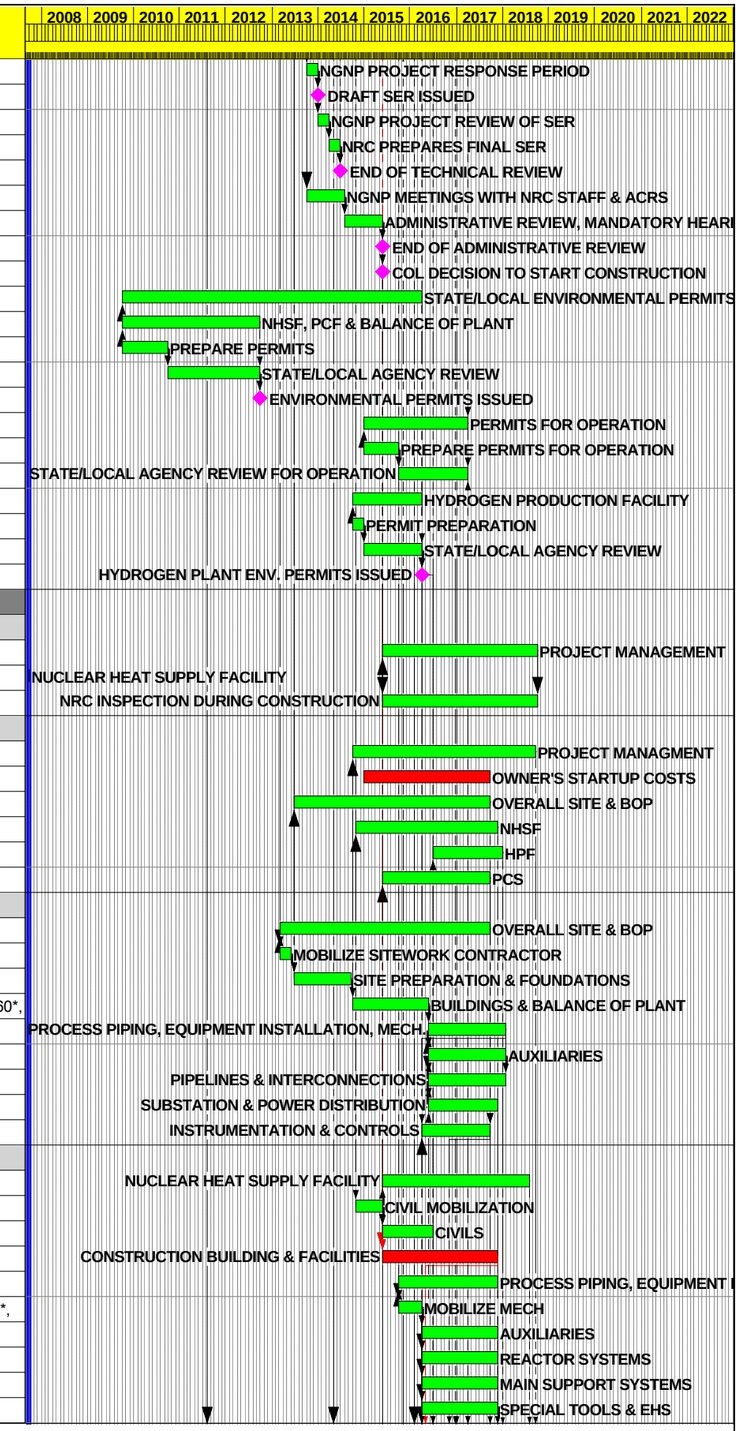

Start Date	01OCT07
Finish Date	29OCT21
Data Date	01OCT07
Run Date	18MAY07 14:17

Early Bar
Progress Bar
Critical Activity

NGNP

Sheet 6 of 8

PRECONCEPTUAL NGNP SCHEDULE

Date	Revision	Checked	Approved

© Primavera Systems, Inc.

WBS	Activity ID	Activity Description	Orig Dur	Early Start	Early Finish	Predecessors	Successors
	CNST-1190	IHX & SECONDARY HELIUM LOOP	435	01APR16	30NOV17	CNST-1140*	
	CNST-1200	INITIAL FILLS, SPARES & CONSUMABLES	435	01APR16	30NOV17	CNST-1130*, CNST-1140*	
	CNST-1220	MOBILIZE ELECTRICAL	66	01FEB16	02MAY16	EACQ-1810*	CNST-1230*
	CNST-1230	ELECTRICAL	412	03MAY16	29NOV17	CNST-1004*, CNST-1220*	
	CNST-1250	MOBILIZE I&C	66	29JAN16	29APR16	EACQ-1820*	CNST-1260*
	CNST-1260	INSTRUMENTATION & CONTROLS	412	02MAY16	28NOV17	CNST-1250*	CNST-1270*, IOPR-1050
	CNST-1270	DEMOBILIZATION	174	29NOV17	30JUL18	CNST-1090*, CNST-1260*	
HYDROGEN PRODUCTION FACILITY							
3 52 HPF	CNST-1280	HYDROGEN PRODUCTION FACILITY	525*	01JUL16	05JUL18	CNST-1290*	CNST-1370*
	CNST-1285	MOBILIZE CIVIL	65	01APR16	30JUN16	EACQ-1890*	CNST-1290*
	CNST-1290	BUILDINGS & BALANCE OF PLANT	391	01JUL16	29DEC17	CNST-1285*, EACQ-1890, ELIC-1475	CNST-1006*, CNST-1280*
	CNST-1300	PROCESS PIPING, EQUIPMENT INSTALLATION, MECH.	456*	01APR16	29DEC17	CNST-1310*	CNST-1330*
	CNST-1310	MOBILIZE MECH.	131	01APR16	30SEP16	EACQ-1900*	CNST-1300*, CNST-1320*, CNST-1330*
	CNST-1320	DECOMPOSITION REACTOR & SYSTEM	325	03OCT16	29DEC17	CNST-1310*	
	CNST-1330	ELECTROLYSIS SYSTEM	325	03OCT16	29DEC17	CNST-1300*, CNST-1310*	CNST-1340*
	CNST-1340	INITIAL FILLS, SPARES & CONSUMABLES	65	02OCT17	29DEC17	CNST-1330*	
	CNST-1345	MOBILIZE ELECTRICAL	65	02JAN17	31MAR17	EACQ-1910*	CNST-1350*
	CNST-1350	ELECTRICAL	195	03APR17	29DEC17	CNST-1006*, CNST-1345*, EACQ-1910	
	CNST-1355	MOBILIZE I&C	65	30DEC16	30MAR17	EACQ-1920*	CNST-1360*
	CNST-1360	INSTRUMENTATION & CONTROLS	195	31MAR17	28DEC17	CNST-1355*, EACQ-1920	CNST-1370*, IOPR-1080*
	CNST-1370	DEMOBILIZATION	175	03NOV17	05JUL18	CNST-1280*, CNST-1360*	
POWER CONVERSION FACILITY							
3 52 PCF	CNST-1380	POWER CONVERSION FACILITY	611*	29MAY15	29SEP17	CNST-1390*	CNST-1480*, ELIC-1440
	CNST-1390	SITE DEVELOPMENT	132	29MAY15*	30NOV15		CNST-1008*, CNST-1380*, CNST-1400*
	CNST-1400	BUILDINGS & STRUCTURES	392	01DEC15	31MAY17	CNST-1390*	
	CNST-1410	PROCESS PIPING, EQUIPMENT INSTALLATION, MECH.	455*	01JAN16	28SEP17	CNST-1420*	CNST-1450*
	CNST-1420	STEAM GENERATOR	435	01JAN16*	31AUG17		CNST-1410*, CNST-1430*, CNST-1440*,
	CNST-1430	STEAM GENERATOR VENDOR PACKAGE	435	01JAN16	31AUG17	CNST-1420*	
	CNST-1440	BALANCE OF PLANT	435	01JAN16	31AUG17	CNST-1420*	
	CNST-1450	COOLING SYSTEM	435	29JAN16	28SEP17	CNST-1410*, CNST-1420*	
	CNST-1460	ELECTRICAL	391	01APR16	29SEP17	CNST-1008*, CNST-1420*	CNST-1470*
	CNST-1470	INSTRUMENTATION & CONTROLS	391	01APR16	29SEP17	CNST-1460*	CNST-1480*, IOPR-1100*
	CNST-1480	INTIAL FILLS, SPARES & CONSUMABLES	65	03JUL17	29SEP17	CNST-1380*, CNST-1470*	
3 54 000 - MOCKUP & TESTING							
3 54 000	CTST-1000	MOCKUP & TESTING	1,109*	08AUG11	05NOV15	CTST-1030*	CTST-1040*
3 54 PM2	CTST-1010	PROJECT MANAGEMENT	1	01OCT07	01OCT07		
3 54 HPF	CTST-1020	HYDROGEN PRODUCTION FACILITY	1,631*	08AUG11	06NOV17	CTST-1030*	CTST-1060*
	CTST-1030	DECOMPOSER PILOT TESTING	521	08AUG11*	05AUG13	ENGD-1340*	CTST-1000*, CTST-1020*, CTST-1040*, ENGD-1510
	CTST-1040	ELECTROLYZER PILOT TESTING	392	07MAY14	05NOV15	CTST-1000*, CTST-1030*, ENGD-1430	CTST-1050*, CTST-1060*, ENGD-1510*
	CTST-1050	HAND-OFF DEVELOPMENT TO VENDOR	0		05NOV15	CTST-1040*	
	CTST-1060	ELECTROLYZER FULL SCALE DEMONSTRATION AT NGNP	522	06NOV15	06NOV17	CTST-1020*, CTST-1040*	CTRN-1050*
3 66 000 - TRAINING							
3 66 000	CTRN-1000	TRAINING	1	01OCT07	01OCT07		
3 66 PM2	CTRN-1010	PROJECT MANAGEMENT	1	01OCT07	01OCT07		
3 66 NHS	CTRN-1020	NUCLEAR HEAT SUPPLY FACILITY	782*	03FEB14	31JAN17	CTRN-1030*	CTRN-1040*
	CTRN-1030	NRC OPERATOR CERTIFICATION TRAINING	782	03FEB14*	31JAN17		CTRN-1020*, CTRN-1040*
	CTRN-1040	OPERATORS PASS LICENSE TEST	0		31JAN17	CTRN-1020*, CTRN-1030*	
3 66 HPF	CTRN-1050	HYDROGEN PRODUCTION FACILITY	130	07NOV17	07MAY18	CTST-1060*	
4 00 000 - INITIAL OPERATIONS & INSPECTION							
4 72 000 - PRE-COMMISSIONING (COLD START-UP)							
4 72 PM2	IOPR-1010	PROJECT MANAGEMENT	1	01OCT07	01OCT07		
4 72 BOP	IOPR-1020	OVERALL SITE & BOP	130*	10NOV16	10MAY17	IOPR-1030*	IOPR-1030*
	IOPR-1030	PRE-COMMISSIONING	130	10NOV16	10MAY17	CNST-1080*, IOPR-1020*	IOPR-1020*, IOPR-1140*
4 72 NHS	IOPR-1040	NUCLEAR HEAT SUPPLY FACILITY	414*	02MAY16	30NOV17	IOPR-1050*	IOPR-1060*

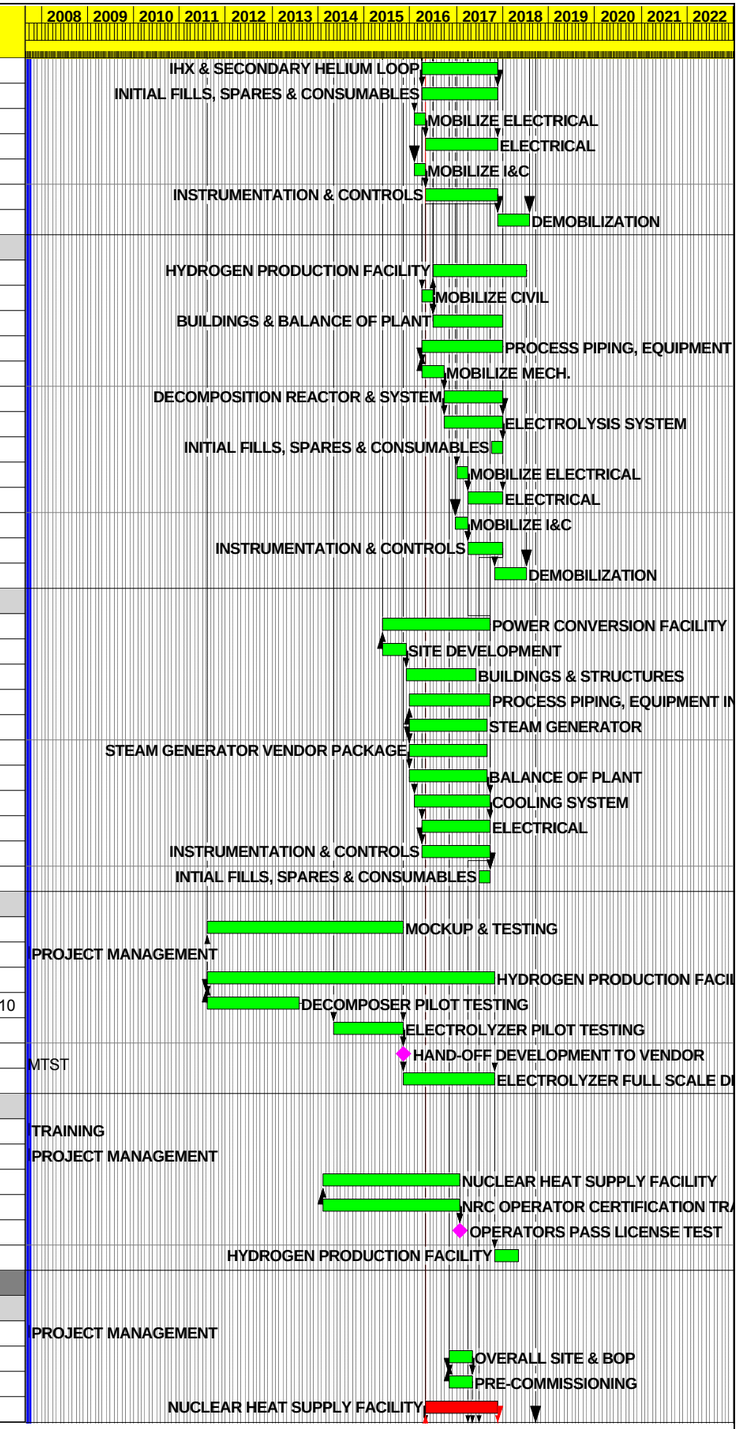

Start Date	01OCT07
Finish Date	29OCT21
Data Date	01OCT07
Run Date	18MAY07 14:17

Early Bar
Progress Bar
Critical Activity

NGNP

PRECONCEPTUAL NGNP SCHEDULE

Date	Revision	Checked	Approved

© Primavera Systems, Inc.

WBS	Activity ID	Activity Description	Orig Dur	Early Start	Early Finish	Predecessors	Successors
	IOPR-1050	PRE-OPERATIONAL TESTING	414	02MAY16	30NOV17	CNST-1120*, CNST-1260	IOPR-1040*, IOPR-1060*
	IOPR-1060	PLANT READY FOR FUEL LOADING	0		30NOV17	IOPR-1040*, IOPR-1050*	IOPR-1160*
4 72 HPF	IOPR-1070	HYDROGEN PRODUCTION FACILITY	130*	30JUN17	28DEC17	IOPR-1080*	IOPR-1080*
	IOPR-1080	PRE-COMMISSIONING	130	30JUN17	28DEC17	CNST-1360*, IOPR-1070*	IOPR-1070*, IOPR-1220*
4 72 PCF	IOPR-1090	POWER CONVERSION FACILITY	130*	03APR17	29SEP17	IOPR-1100*	IOPR-1100*
	IOPR-1100	PRE-COMMISSIONING	130	03APR17	29SEP17	CNST-1470*, IOPR-1090*	IOPR-1090*, IOPR-1240*
4 73 000 -COMMISSIONING & STARTUP (HOT START-UP)							
4 73 PM2	IOPR-1120	PROJECT MANAGEMENT	1	01OCT07	01OCT07		
4 73 BOP	IOPR-1130	OVERALL SITE & BOP	195*	11MAY17	07FEB18	IOPR-1140*	IOPR-1140*
	IOPR-1140	STARTUP & TESTING	195	11MAY17	07FEB18	IOPR-1030*, IOPR-1130*	IOPR-1130*
4 73 NHS	IOPR-1150	NUCLEAR HEAT SUPPLY FACILITY	216*	01DEC17	28SEP18	IOPR-1160*	IOPR-1200*
	IOPR-1160	INITIAL FUEL LOAD TO LOWER POWER TESTING	64	01DEC17	28FEB18	IOPR-1060*	IOPR-1150*, IOPR-1170*
	IOPR-1170	1ST SYNC TO GRID	22	01MAR18	30MAR18	IOPR-1160*	IOPR-1180*
	IOPR-1180	POWER ASCENSION TESTING	65	02APR18	29JUN18	IOPR-1170*	IOPR-1190*
	IOPR-1190	MAINTENANCE OUTAGE	22	02JUL18	31JUL18	IOPR-1180*	IOPR-1200*
	IOPR-1200	PLANT ACCEPTANCE TESTING	43	01AUG18	28SEP18	IOPR-1150*, IOPR-1190*	OPRC-1010*
4 73 HPF	IOPR-1210	HYDROGEN PRODUCTION FACILITY	195*	29DEC17	27SEP18	IOPR-1220*	IOPR-1220*
	IOPR-1220	STARTUP & TESTING	195	29DEC17	27SEP18	CNST-1000*, IOPR-1080*, IOPR-1210*	IOPR-1210*, IOPR-1250*
4 73 PCF	IOPR-1230	POWER CONVERSION FACILITY	195*	02OCT17	29JUN18	IOPR-1240*	IOPR-1240*
	IOPR-1240	STARTUP & TESTING	195	02OCT17	29JUN18	IOPR-1100*, IOPR-1230*	IOPR-1230*
	IOPR-1250	DOE MILESTONE CD-4: APPROVAL FOR COMM. OPER.	0		27SEP18	IOPR-1220*	OPRC-1010, OPRC-1020*, OPRC-1030*,
5 00 000 - OPERATE COMMERCIALLY							
5 74 000 - OPERATE PLANT							
5 74 PM2	OPRC-1010	PROJECT MANAGEMENT	784	01OCT18	30SEP21	IOPR-1200*, IOPR-1250	OPRC-2010*
5 74 BOP	OPRC-1020	OVERALL SITE & BOP	784	28SEP18	29SEP21	IOPR-1250*	OPRC-2020*
5 74 NHS	OPRC-1030	NUCLEAR HEAT SUPPLY FACILITY	784	28SEP18	29SEP21	IOPR-1250*	OPRC-2030*
5 74 HPF	OPRC-1040	HYDROGEN PRODCUTION FACILITY	784	28SEP18	29SEP21	IOPR-1250*	OPRC-2040*
5 74 PCF	OPRC-1050	POWER CONVERSION FACILITY	784	28SEP18	29SEP21	IOPR-1250*	OPRC-2050*
5 76 000 - SHUTDOWN & INSPECTIONS							
5 76 PM2	OPRC-2010	PROJECT MANAGEMENT	0	01OCT21		OPRC-1010*	OPRC-3010*
5 76 BOP	OPRC-2020	OVERALL SITE & BOP	0	30SEP21		OPRC-1020*	OPRC-3020*
5 76 NHS	OPRC-2030	NUCLEAR HEAT SUPPLY FACILITY	0	30SEP21		OPRC-1030*	OPRC-3030*
5 76 HPF	OPRC-2040	HYDROGEN PRODUCTION FACILITY	0	30SEP21		OPRC-1040*	OPRC-3040*
5 76 PCF	OPRC-2050	POWER CONVERSION FACILITY	0	30SEP21		OPRC-1050*	OPRC-3050*
5 75 000 - MAINTAIN PLANT							
5 75 PM2	OPRC-3010	PROJECT MANAGEMENT	21	01OCT21	29OCT21	OPRC-2010*	
5 75 BOP	OPRC-3020	OVERALL SITE & BOP	21	30SEP21	28OCT21	OPRC-2020*	
5 75 NHS	OPRC-3030	NUCLEAR HEAT SUPPLY FACILITY	21	30SEP21	28OCT21	OPRC-2030*	
5 75 HPF	OPRC-3040	HYDROGEN PRODUCTION FACILITY	21	30SEP21	28OCT21	OPRC-2040*	
5 75 PCF	OPRC-3050	POWER CONVERSION FACILITY	21	30SEP21	28OCT21	OPRC-2050*	

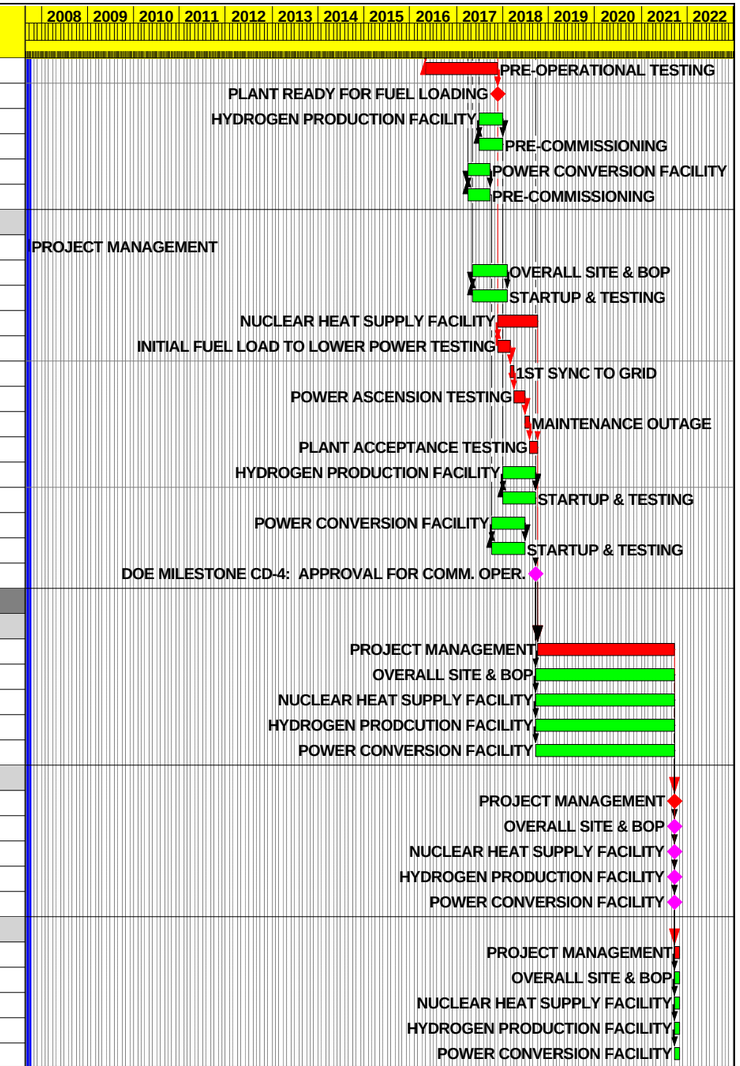

Start Date	01OCT07
Finish Date	29OCT21
Data Date	01OCT07
Run Date	18MAY07 14:17

Early Bar
Progress Bar
Critical Activity

NGNP

Sheet 8 of 8

PRECONCEPTUAL NGNP SCHEDULE

Date	Revision	Checked	Approved

© Primavera Systems, Inc.

WBS	Activity ID	Activity Description	Orig Dur	Early Start	Early Finish
REFERENCE BASELINES					
DEMONSTRATION POWER PLANT (ZA)					
	REFD-0100	PRE-PRODUTION FUEL AVAILABLE FOR IRRADIATION	0	17DEC07*	
	REFD-0200	PRODUCTION FUEL AVAILABLE FOR IRRADIATION	0	11JUN12*	
	REFD-0300	DPP FUEL QUALIFICATION 5% FIMA (RIG 1)	0	13OCT14*	
	REFD-0400	DPP FUEL QUALIFIATION 11.5% FIMA (RIGS 2,3 & 4)	0	11JUN18*	
	REFD-1000	DPP INITIAL FUEL LOAD	0	02SEP13*	
	REFD-1010	DPP HANDOVER FOR COMMERCIAL OPERATION	0		01DEC14*
	REFD-1020	DPP EQUILIBRIUM FUEL	0		01DEC15*
FUEL MANUFACTURING PILOT PLANT (ZA)					
	REFF-1000	INITIAL FUEL AVAILABLE FROM PBMR ACF	0	15JAN08*	
	REFF-1010	FUEL AVAILABLE - PBMR PFP FOR FUEL IRRADIATION	0	11JUL12*	
	REFF-1015	IRRADIATION PROGRAM STARTS	0	01JAN08*	
	REFF-1020	PBMR PFP FUEL READY TO SUPPLY TO NGNP	0	01DEC14*	
COMMERCIAL PLANTS (U.S.)					
	REFC-1000	PRE-APPLICATION, DESIGN, SAR, DC	545	01OCT07	30OCT09
NGNP PROJECT					
2 00 000 ENGINEERING/DESIGN					
2 22 000 - TECHNOLOGY DEVELOPMENT					
2 22 PM2	ENGD-1010	PROJECT MANAGEMENT	2,200*	01OCT07	04MAR16
NUCLEAR HEAT SUPPLY FACILITY					
2 22 NHS	ENGD-1020	NUCLEAR HEAT SUPPLY FACILITY	2,085*	01OCT07	25SEP15
	ENGD-1023	NHS R&D PLAN	66	01OCT07	31DEC07
	ENGD-1025	PIGGY BACK IRRADIATION	1,560*	01JAN08	23DEC13
	ENGD-1030	AGR-2 (PREP, IRRADIATE, DECAY, PIE)	1,040	01JAN08	26DEC11
	ENGD-1040	AGR-3 (PREP, IRRADIATE, DECAY, PIE)	1,300	30DEC08	23DEC13
	ENGD-1050	PRE-PRODUCTION FUEL IRRADIATION	1,045	01JAN08	02JAN12
	ENGD-1060	PRODUCTION FUEL IRRADIATION	1,045	13JUL11	14JUL15
	ENGD-1080	IHX - METALLIC	2,093*	01OCT07	07OCT15
	ENGD-1090	MATERIALS DEVELOPMENT & QUALIFICATION	785*	01OCT07	01OCT10
	ENGD-1100	ALLOY 617 SPECIFICATION & TESTING	785	01OCT07	01OCT10
	ENGD-1110	ALLOY 230 SPECIFICATION & TESTING	785	01OCT07	01OCT10
	ENGD-1120	METHODS DEVELOP, VERIFICATION & VALIDATION	2,093*	01OCT07	07OCT15
	ENGD-1130	IHX DESIGN METHODS & CRITERIA	483	01APR09*	04FEB11
	ENGD-1140	IHX PERFORMANCE VERIFICATION	2,093	01OCT07	07OCT15
	ENGD-1150	IHX CODE CASE	435	06FEB14	07OCT15
	ENGD-1160	IHX - CERAMIC	2,085*	01OCT07	25SEP15
	ENGD-1170	MATERIALS DEVELOPMENT & QUALIFICATION	520*	01OCT07	25SEP09
	ENGD-1180	REFERENCE TECHNOLOGY SELECTION	130	01OCT07	28MAR08
	ENGD-1190	MATERIALS PROPERTIES DATABASE	390	31MAR08	25SEP09
	ENGD-1200	METHODS DEVELOP, VERIFICATION & VALIDATION	1,955*	31MAR08	25SEP15
	ENGD-1210	DESIGN METHODS & CRITERIA	650	31MAR08	24SEP10
	ENGD-1220	PERFORMANCE VERIFICATION	915	29MAR10	27SEP13
	ENGD-1230	MANUFACTURING TECHNOLOGY	650	31MAR08	24SEP10
	ENGD-1240	CODES AND STANDARDS	1,305	27SEP10	25SEP15
	ENGD-1250	SECONDARY HTS HELIUM MIXER	520	04OCT10	28SEP12
	ENGD-1260	SECONDARY HTS HELIUM MIXING CHAMBER	520	04OCT10*	28SEP12
	ENGD-1265	SUBMIT NHS R&D FINAL REPORT	0		31DEC15*
HYDROGEN PRODUCTION FACILITY					
2 22 HPS	ENGD-1270	HYDROGEN PRODUCTION FACILITY	2,200*	01OCT07	04MAR16
	ENGD-1275	HPF R&D PLAN	45	01OCT07	30NOV07

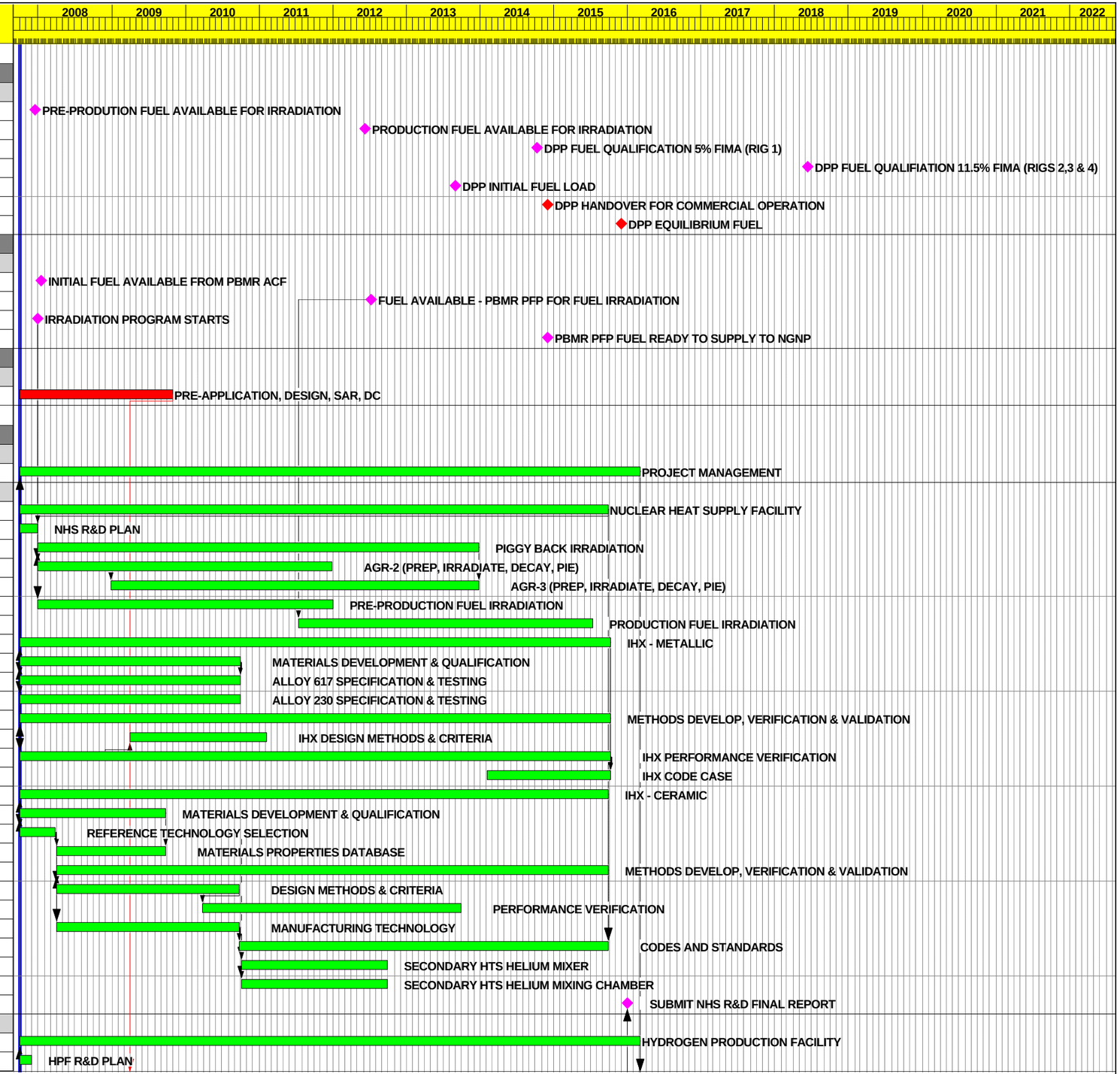

Start Date	01OCT07	Early Bar
Finish Date	29OCT21	Progress Bar
Data Date	01OCT07	Critical Activity
Run Date	18MAY07 14:15	

© Primavera Systems, Inc.

NGNP

Sheet 1 of 8

PRECONCEPTUAL NGNP SCHEDULE

Date	Revision	Checked	Approved

WBS	Activity ID	Activity Description	Orig Dur	Early Start	Early Finish
	ENGD-1280	R&D IDENTIFIED DURING CONCEPTUAL DESIGN	1,434	01SEP08	27FEB14
	ENGD-1290	BASIC DATA	420*	01OCT07	08MAY09
	ENGD-1300	THERMODYNAMIC DATA	240	01OCT07	29AUG08
	ENGD-1310	REACTION KINETICS DATA	240	01OCT07	29AUG08
	ENGD-1315	DATA ANALYSIS AND MODEL	180	01SEP08	08MAY09
	ENGD-1320	DECOMPOSER	1,485*	01OCT07	07JUN13
	ENGD-1330	CATALYST	480	01OCT07	31JUL09
	ENGD-1340	MATERIALS OF CONSTRUCTION	1,005	01OCT07	05AUG11
	ENGD-1345	PILOT TESTING	480	08AUG11	07JUN13
	ENGD-1350	DESIGN CODE CASE	400	22MAR10	30SEP11
	ENGD-1360	SULFURIC ACID CONCENTRATOR	240	24NOV08	23OCT09
	ENGD-1370	ELECTROLYZER	2,400*	01OCT07	09DEC16
	ENGD-1380	CATALYST LOADING TESTS	480	01OCT07	31JUL09
	ENGD-1390	CELL MEMBRANE DEVELOPMENT	480	01OCT07	31JUL09
	ENGD-1400	HAND-OFF RESEARCH TO DEVELOPMENT LAB	0		31JUL09
	ENGD-1410	CELL DEVELOPMENT	360	03AUG09	17DEC10
	ENGD-1420	PROTOTYPE CELL	360	20DEC10	04MAY12
	ENGD-1430	PILOT CELL	360	07MAY12	20SEP13
	ENGD-1432	PILOT PLANT	360	23SEP13	06FEB15
	ENGD-1435	HAND-OFF: DEVELOPMENT TO VENDOR	0		06FEB15
	ENGD-1437	BUILD FULL-SCALE DEMO AT IDAHO	480	09FEB15	09DEC16
	ENGD-1440	FEED PURIFICATION	240*	01APR13	28FEB14
	ENGD-1450	SYSTEM TOLERANCE TO IMPURITIES	175*	01APR13	29NOV13
	ENGD-1460	DECOMPOSER	45	01APR13*	31MAY13
	ENGD-1470	ELECTROLYZER	44	01OCT13*	29NOV13
	ENGD-1480	SULFURIC ACID PURIFICATION SYSTEM	65	02DEC13	28FEB14
	ENGD-1490	WATER PURIFICATION SYSTEM	65	02DEC13	28FEB14
	ENGD-1500	SO2 ABSORBERS	195	24NOV08	21AUG09
	ENGD-1510	PRODUCT PURIFICATION TESTING	86	06NOV15	04MAR16
	ENGD-1520	OTHER MATERIALS	522	03NOV08*	02NOV10
	ENGD-1530	SENSING & CONTROL	480*	27SEP10	27JUL12
	ENGD-1540	SENSOR PILOTING	240	27SEP10	26AUG11
	ENGD-1560	VALVE DEVELOPMENT	240	27SEP10	26AUG11
	ENGD-1570	VALVE PILOTING	240	29AUG11	27JUL12
	ENGD-1575	SUBMIT HPF R&D FINAL REPORT	0		04MAR16
POWER CONVERSION FACILITY					
	ENGD-1585	PCF R&D PLAN	45	01OCT07	30NOV07
2 22 PCS	ENGD-1590	PCS	1,307	01OCT07	02OCT12
	ENGD-1595	SUBMIT PCF R&D FINAL REPORT	0		02OCT12
2 32 000 - CONCEPTUAL DESIGN					
2 32 000	ENGD-1600	CONCEPTUAL DESIGN	392*	01OCT07	31MAR09
2 32 PM2	ENGD-1610	PROJECT MANAGEMENT	392	01OCT07	31MAR09
2 32 PSE	ENGD-1620	OVERALL PLANT INTEGRATION	392	01OCT07	31MAR09
2 32 BOP	ENGD-1630	OVERALL SITE & BOP	392	01OCT07	31MAR09
2 32 NHS	ENGD-1640	NUCLEAR HEAT SUPPLY FACILITY	2,154*	01OCT07	31DEC15
	ENGD-1642	CONCEPTUAL ENGINEERING	392	01OCT07	31MAR09
	ENGD-1644	ENGINEERING SUPPORT DURING R&D	1,762	01APR09	31DEC15
	ENGD-1645	DOE MILESTONE CD-1	0		28SEP07
2 32 HPF	ENGD-1650	HYDROGEN PRODUCTION FACILITY	1,663*	01OCT07	12FEB14
	ENGD-1660	CONCEPTUAL ENGINEERING	392	01OCT07	31MAR09
	ENGD-1670	ENGINEERING SUPPORT DURING R&D	1,271	01APR09	12FEB14
	ENGD-1675	DOE MILESTONE CD-1A	0		19NOV08*
2 32 PCF	ENGD-1680	POWER CONVERSION FACILITY	1,045*	01OCT07	30SEP11
	ENGD-1685	CONCEPTUAL ENGINEERING	392	01OCT07	31MAR09

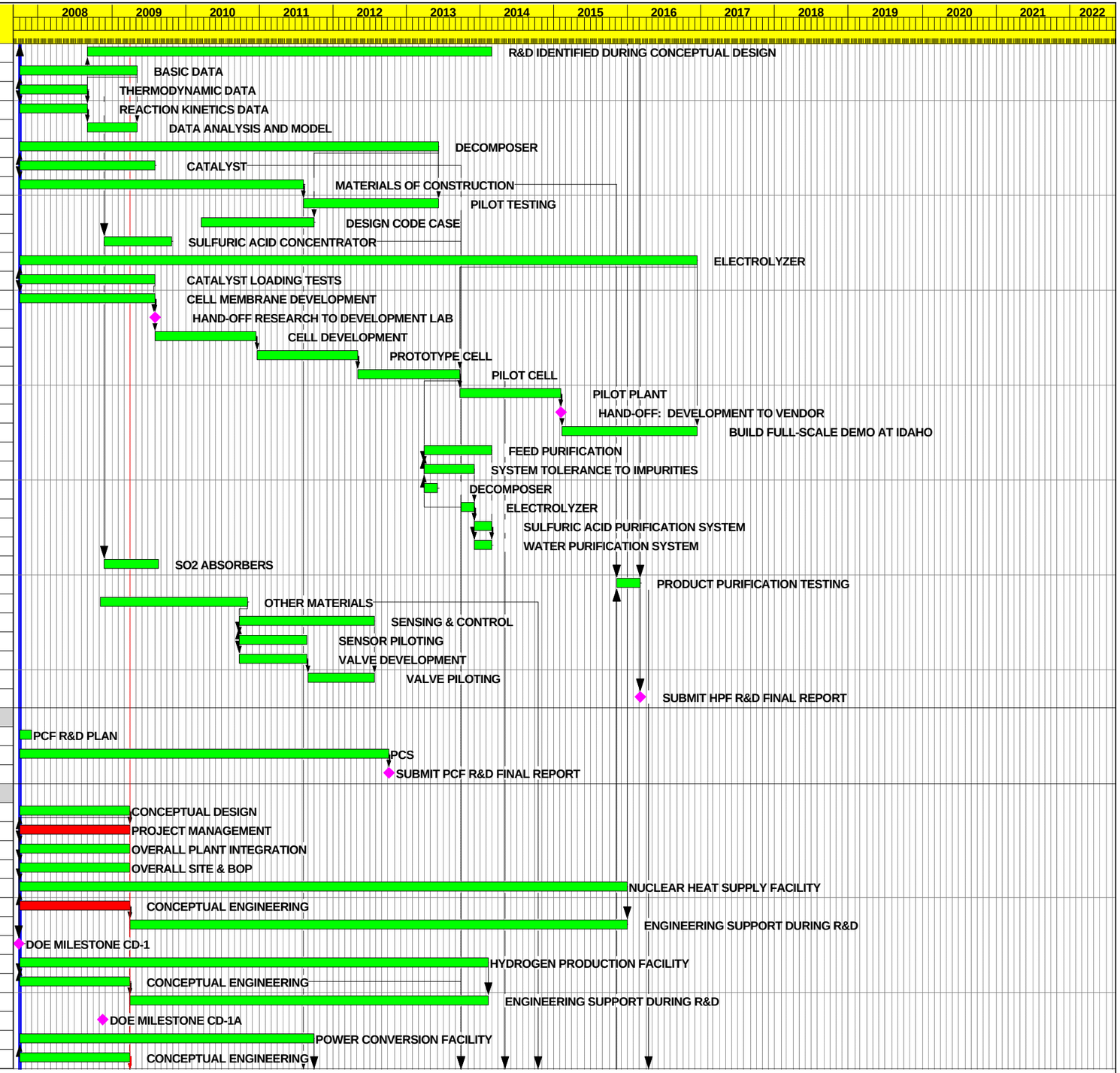

Start Date	01OCT07	Early Bar
Finish Date	29OCT21	Progress Bar
Data Date	01OCT07	Critical Activity
Run Date	18MAY07 14:15	

© Primavera Systems, Inc.

NGNP

Sheet 2 of 8

PRECONCEPTUAL NGNP SCHEDULE

Date	Revision	Checked	Approved

WBS	Activity ID	Activity Description	Orig Dur	Early Start	Early Finish
	ENGD-1688	ENGINEERING SUPPORT DURING R&D	653	01APR09	30SEP11
2 33 000 - PRELIMINARY DESIGN					
2 33 000	ENGD-1700	PRELIMINARY DESIGN	522*	01APR09	31MAR11
	ENGD-1705	Design Freeze to Support Final Safety	0		31MAR11
2 33 PM2	ENGD-1710	PROJECT MANAGEMENT	522	01APR09	31MAR11
2 33 PSE	ENGD-1720	OVERALL PLANT INTEGRATION	522*	01APR09	31MAR11
	ENGD-1730	PRELIMINARY ENGINEERING & SAFETY ANALYSIS	522	01APR09	31MAR11
	ENGD-1740	FINAL SAFETY ANALYSIS	218	01APR11	31JAN12
	ENGD-1750	PREPARE ISA SUMMARY	86	01FEB12	30MAY12
2 33 BOP	ENGD-1760	OVERALL SITE & BOP	522	01APR09	31MAR11
2 33 NHS	ENGD-1770	NUCLEAR HEAT SUPPLY FACILITY	521	02APR09	31MAR11
2 33 HPF	ENGD-1780	HYDROGEN PRODUCTION FACILITY	262	30SEP13	30SEP14
2 33 PCF	ENGD-1790	POWER CONVERSION FACILITY	522	01APR09	31MAR11
	ENGD-1795	DOE MILESTONE CD-2	0		31MAR11
	ENGD-1798	DOE MILESTONE CD-2A	0		30SEP14
2 34 000 - FINAL DESIGN					
2 34 000	ENGD-1800	FINAL DESIGN	782*	01APR11	31MAR14
2 34 PM2	ENGD-1810	PROJECT MANAGEMENT	782	01APR11	31MAR14
2 34 PSE	ENGD-1820	OVERALL PLANT INTEGRATION	782	01APR11	31MAR14
2 34 BOP	ENGD-1830	OVERALL SITE & BOP	782	01APR11	31MAR14
2 34 NHS	ENGD-1840	NUCLEAR HEAT SUPPLY FACILITY	782	01APR11	31MAR14
2 34 HPF	ENGD-1850	HYDROGEN PRODUCTION FACILITY	392	16OCT14	15APR16
2 34 PCF	ENGD-1860	POWER CONVERSION FACILITY	782	01APR11	31MAR14
	ENGD-1870	DOE MILESTONE CD-3	0	01JUL13	
	ENGD-1880	DOE MILESTONE CD-3A	0	18APR16	
ACQUISITION STRATEGIES & LONG LEAD PROCUREMENT					
2 36 000	EACQ-1000	ACQUISITION STRATEGIES	2,109*	01OCT09	31OCT17
2 36 PM2	EACQ-1010	PROJECT MANAGEMENT	2,109*	01OCT09	31OCT17
2 36 BOP	EACQ-1020	OVERALL SITE & BOP	587*	02JUL12	30SEP14
	EACQ-1022	WASTEWATER EVAPORATOR	587*	02JUL12	30SEP14
2 36 BOP	EACQ-1024	ACQUISITION STRATEGY DEVELOPMENT	65	02JUL12*	28SEP12
2 36 BOP	EACQ-1025	ORDER MATERIAL, MANUF, TRANSPORT	522	01OCT12	30SEP14
2 36 BOP	EACQ-1026	EVAPORATOR ONSITE	0		30SEP14
	EACQ-1027	CONSTRUCTION CONTRACT	1	01OCT07	01OCT07
	EACQ-1028	SITEWORK	195	04JUN12	01MAR13
2 36 NHS	EACQ-1030	NUCLEAR HEAT SUPPLY FACILITY	2,109*	01OCT09	31OCT17
	EACQ-1200	TRAINING SIMULATOR	937*	01APR13	01NOV16
2 36 NHS	EACQ-1210	ACQUISITION STRATEGY DEVELOPMENT	131	01APR13*	30SEP13
2 38 NHS	EACQ-1220	ORDER SIMULATOR	0		01OCT13
2 38 NHS	EACQ-1230	MANUFACTURING, PROGRAMMING, TRANSPORT	805	02OCT13	01NOV16
2 38 NHS	EACQ-1240	SIMULATOR ON-SITE	0		01NOV16
	EACQ-1250	PBMR REACTOR FUEL	1,218*	01MAR13	31OCT17
2 36 NHS	EACQ-1260	ACQUISITION STRATEGY DEVELOPMENT	131	01MAR13*	30AUG13
2 38 NHS	EACQ-1270	ORDER PBMR FUEL	0		30AUG13
2 38 NHS	EACQ-1280	MANUFACTURING	500	01SEP15*	31JUL17
2 38 NHS	EACQ-1290	TRANSPORT TO SITE	66	01AUG17	31OCT17
2 38 NHS	EACQ-1300	FUEL ONSITE	0		31OCT17
	EACQ-1370	REACTOR PRESSURE VESSEL	1,499*	01OCT09	30JUN15
2 36 NHS	EACQ-1380	ACQUISITION STRATEGY DEVELOPMENT	130	01OCT09*	31MAR10
2 38 NHS	EACQ-1390	ORDER MATERIAL	261	01APR10	31MAR11
2 38 NHS	EACQ-1400	MANUFACTURING	1,043	01APR11	31MAR15
2 38 NHS	EACQ-1410	TRANSPORT TO SITE	65	01APR15	30JUN15
2 38 NHS	EACQ-1420	PRESSURE VESSEL ONSITE	0		30JUN15
	EACQ-1430	HELIUM PRESSURE BOUNDARY	868*	02DEC11	31MAR15

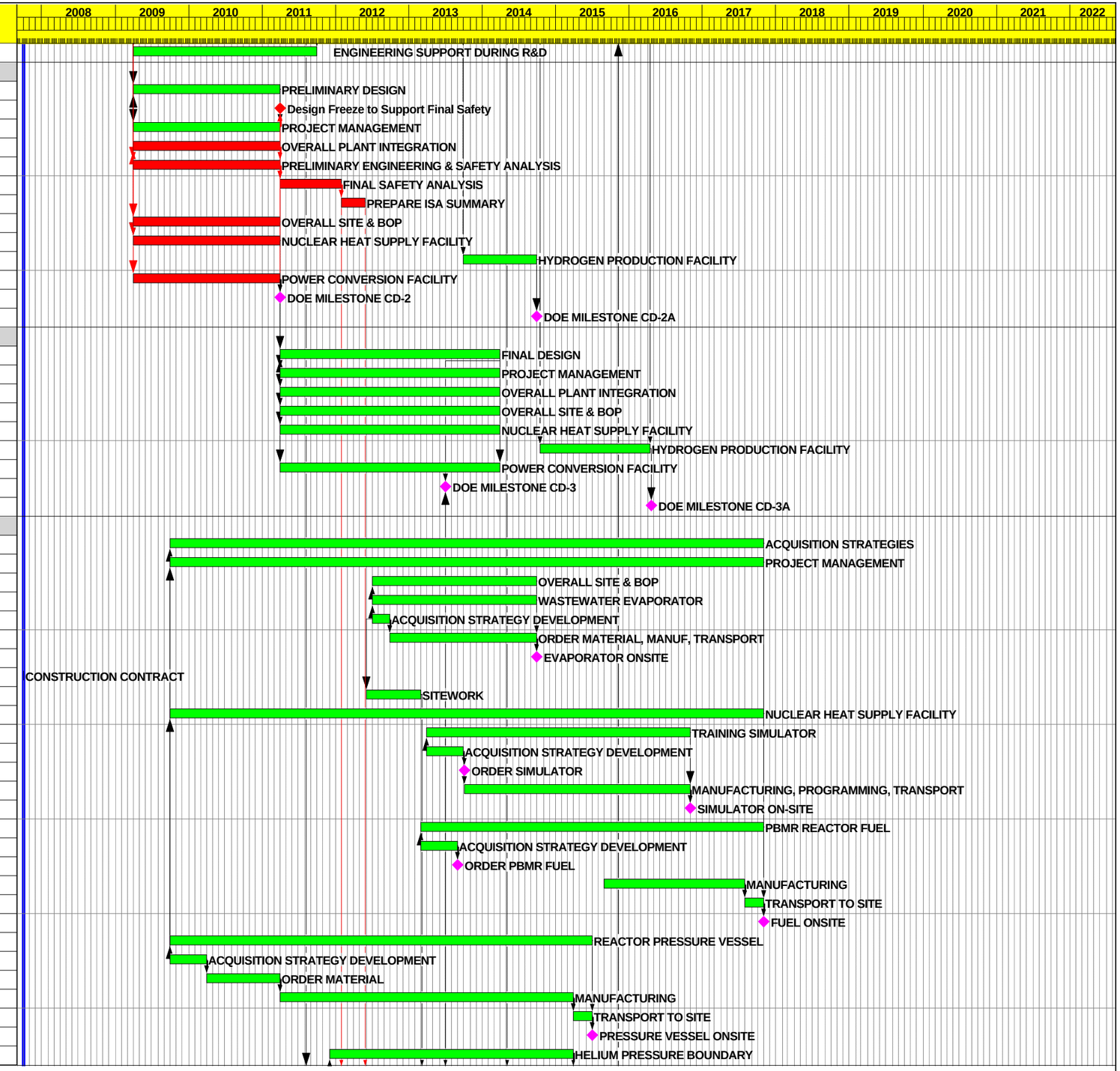

Start Date	01OCT07	Early Bar
Finish Date	29OCT21	Progress Bar
Data Date	01OCT07	Critical Activity
Run Date	18MAY07 14:15	

© Primavera Systems, Inc.

NGNP

Sheet 3 of 8

PRECONCEPTUAL NGNP SCHEDULE

Date	Revision	Checked	Approved

WBS	Activity ID	Activity Description	Orig Dur	Early Start	Early Finish
2 36 NHS	EACQ-1440	ACQUISITION STRATEGY DEVELOPMENT	130	02DEC11*	31MAY12
2 38 NHS	EACQ-1450	ORDER MATERIAL	261	01JUN12	31MAY13
2 38 NHS	EACQ-1460	MANUFACTURING	347	03JUN13	30SEP14
2 38 NHS	EACQ-1470	HOT GAS DUCT INTEGRATION	66	01OCT14	31DEC14
2 38 NHS	EACQ-1480	TRANSPORT TO SITE	64	01JAN15	31MAR15
2 38 NHS	EACQ-1490	PRESSURE BOUNDARY ONSITE	0		31MAR15
	EACQ-1500	CORE BARREL ASSEMBLY (CBA)	1,109*	02APR12	30JUN16
2 36 NHS	EACQ-1510	ACQUISITION STRATEGY DEVELOPMENT	130	02APR12*	28SEP12
2 38 NHS	EACQ-1520	ORDER LLI FOR CORE BARREL ASSEMBLY	435	01OCT12	30MAY14
2 38 NHS	EACQ-1530	CBA MANUFACTURING	479	02JUN14	31MAR16
2 38 NHS	EACQ-1540	TRANSPORT TO SITE	65	01APR16	30JUN16
2 38 NHS	EACQ-1550	CBA ONSITE	0		30JUN16
	EACQ-1560	CORE STRUCTURE CERAMICS (CSC) - GRAPHITE	1	01DEC11	01DEC11
2 36 NHS	EACQ-1570	ACQUISITION STRATEGY DEVELOPMENT	131	01DEC11*	31MAY12
2 38 NHS	EACQ-1580	ORDER COKE & FEEDSTOCK	435	01OCT12*	30MAY14
2 38 NHS	EACQ-1590	CSC MANUFACTURING	479	02JUN14	31MAR16
2 38 NHS	EACQ-1600	TRANSPORT TO SITE	65	01APR16	30JUN16
2 38 NHS	EACQ-1610	CSC ONSITE	0		30JUN16
	EACQ-1620	INTERMEDIATE HEAT EXCHANGER (IHX)	1,239*	01JUL11	30MAR16
2 36 NHS	EACQ-1630	ACQUISITION STRATEGY DEVELOPMENT	131	01JUL11*	30DEC11
2 38 NHS	EACQ-1640	PLACE ORDER	261	02JAN12	31DEC12
2 38 NHS	EACQ-1650	MANUFACTURING	783	01JAN13	31DEC15
2 38 NHS	EACQ-1660	TRANSPORT TO SITE	64	01JAN16	30MAR16
2 38 NHS	EACQ-1670	IHX ONSITE	0		30MAR16
	EACQ-1680	FUEL HANDLING & STORAGE SYSTEM (FHS)	457*	01MAY14	29JAN16
2 36 NHS	EACQ-1690	ACQUISITION STRATEGY DEVELOPMENT	66	01MAY14*	31JUL14
2 38 NHS	EACQ-1700	ORDER MATERIAL, MANUF, TRANSPORT	391	01AUG14	29JAN16
2 38 NHS	EACQ-1710	FHS ONSITE	0		29JAN16
	EACQ-1720	HELIUM SERVICES SYSTEM (HSS)	978*	01AUG12	29APR16
2 36 NHS	EACQ-1730	ACQUISITION STRATEGY DEVELOPMENT	132	01AUG12*	31JAN13
2 38 NHS	EACQ-1740	ORDER MATERIAL	261	01FEB13	31JAN14
2 38 NHS	EACQ-1750	MANUFACTURING	520	03FEB14	29JAN16
2 38 NHS	EACQ-1760	TRANSPORT TO SITE	65	01FEB16	29APR16
2 38 NHS	EACQ-1770	HSS ONSITE	0		29APR16
	EACQ-1780	CONSTRUCTION CONTRACTS	520*	03FEB14	29JAN16
	EACQ-1790	CIVIL	195	03FEB14*	31OCT14
	EACQ-1800	PROCESS PIPING, EQUIPMENT, MECHANICAL	261	01OCT14*	30SEP15
	EACQ-1810	ELECTRICAL	196	01MAY15*	29JAN16
	EACQ-1820	INSTRUMENTATION & CONTROL	196	30APR15*	28JAN16
	EACQ-1830	HYDROGEN PRODUCTION FACILITY	915*	01APR13	30SEP16
	EACQ-1840	DECOMPOSITION REACTOR & SYSTEM	915*	01APR13	30SEP16
2 36 HPS	EACQ-1850	ACQUSITION STRATEGY DEVELOPMENT	131	01APR13*	30SEP13
2 38 HPS	EACQ-1860	ORDER MATERIAL, MANUF, TRANSPORT	784	01OCT13	30SEP16
2 38 HPS	EACQ-1870	DECOMPOSER ONSITE	0		30SEP16
	EACQ-1880	CONSTRUTION CONTRACTS HPF	327*	01OCT15	30DEC16
	EACQ-1890	BUILDINGS & BALANCE OF PLANT	131	01OCT15*	31MAR16
	EACQ-1900	PROCESS PIPING, EQUIPMENT, MECHANICAL	197	01JUL15*	31MAR16
	EACQ-1910	ELECTRICAL	131	01JUL16*	30DEC16
	EACQ-1920	INSTRUMENTATION & CONTROLS	131	30JUN16*	29DEC16
	EACQ-1930	POWER CONVERSION FACILITY	848*	01JUL11	30SEP14
	EACQ-1940	AIR COOLED CONDENSER (ACC)	848*	01JUL11	30SEP14
2 36 PCS	EACQ-1950	ACQUISITION STRATEGY DEVELOPMENT	66	01JUL11*	30SEP11
2 38 PCS	EACQ-1960	ORDER MATERIAL, MANUF, TRANSPORT	782	03OCT11	30SEP14
2 38 PCS	EACQ-1970	ACC ONSITE	0		30SEP14

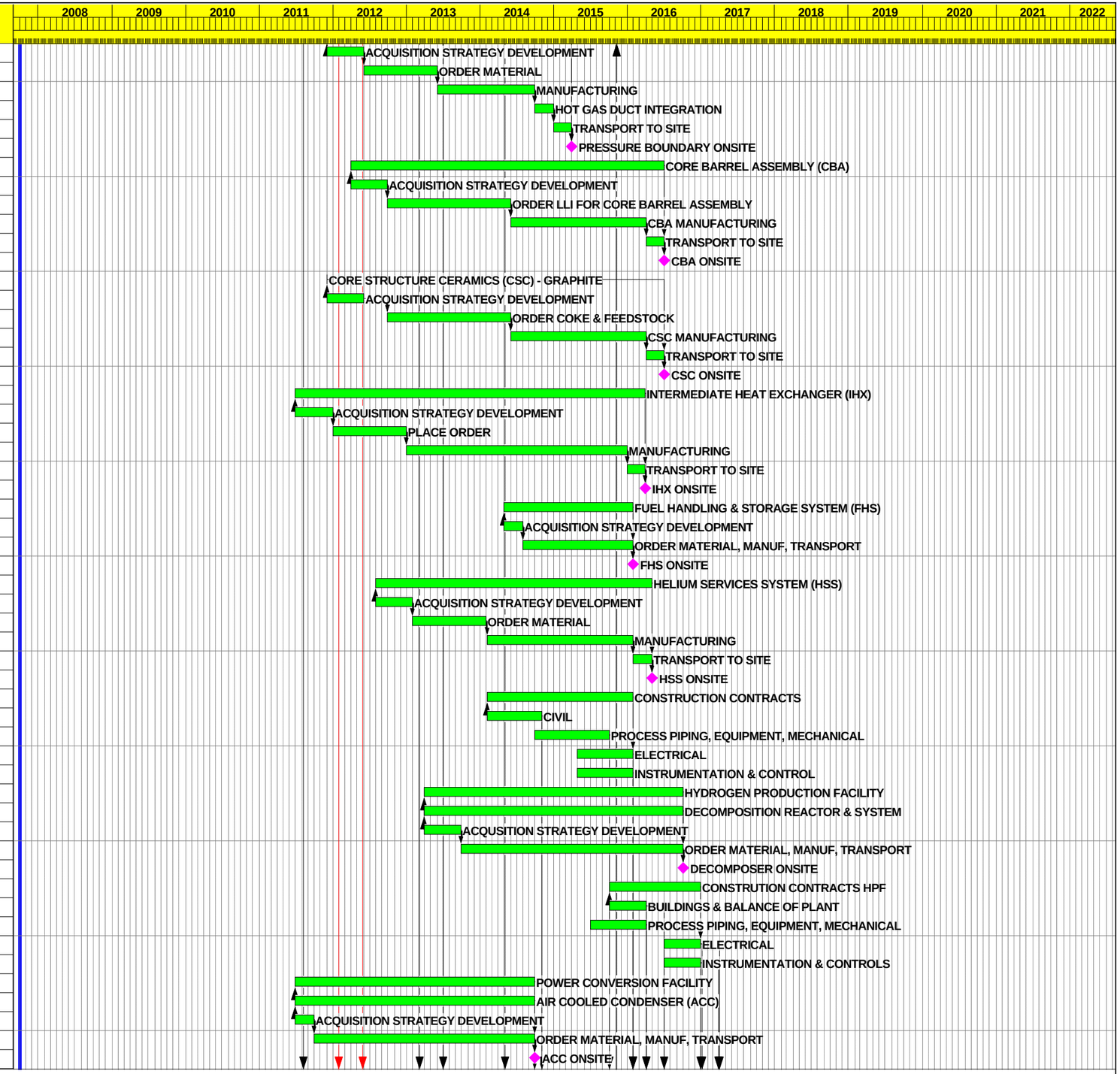

Start Date	01OCT07	Early Bar
Finish Date	29OCT21	Progress Bar
Data Date	01OCT07	Critical Activity
Run Date	18MAY07 14:15	

© Primavera Systems, Inc.

NGNP

Sheet 4 of 8

PRECONCEPTUAL NGNP SCHEDULE

Date	Revision	Checked	Approved

WBS	Activity ID	Activity Description	Orig Dur	Early Start	Early Finish
	EACQ-1980	TURBO MACHINERY	913*	01APR11	30SEP14
2 36 PCS	EACQ-1990	ACQUISITION STRATEGY DEVELOPMENT	65	01APR11*	30JUN11
2 38 PCS	EACQ-2000	ORDER MATERIAL, MANUF, TRANSPORT	848	01JUL11	30SEP14
2 38 PCS	EACQ-2010	TURBO MACHINERY ONSITE	0		30SEP14
	EACQ-2020	STEAM GENERATOR (SG)	1,317*	16MAY11	31MAY16
2 36 PCS	EACQ-2030	ACQUISITION STRATEGY DEVELOPMENT	66	16MAY11*	15AUG11
2 38 PCS	EACQ-2040	ORDER MATERIAL, MANUF, TRANSPORT	1,251	16AUG11	31MAY16
2 38 PCS	EACQ-2050	SG ONSITE	0		31MAY16
	EACQ-2060	FEED WATER HEATERS	717*	02JAN12	30SEP14
2 36 PCS	EACQ-2070	ACQUISITION STRATEGY DEVELOPMENT	65	02JAN12*	30MAR12
2 38 PCS	EACQ-2080	ORDER MATERIAL, MANUF, TRANSPORT	652	02APR12	30SEP14
2 38 PCS	EACQ-2090	FEED WATER HEATERS ONSITE	0		30SEP14
	EACQ-2100	CONSENSATE/FEEDWATER PUMPS	848*	01JUL11	30SEP14
2 36 PCS	EACQ-2110	ACQUISITION STRATEGY DEVELOPMENT	66	01JUL11*	30SEP11
2 38 PCS	EACQ-2120	ORDER MATERIAL, MANUF, TRANSPORT	782	03OCT11	30SEP14
2 38 PCS	EACQ-2130	CONDENSATE/FEEDWATER PUMPS ONSITE	0		30SEP14
	EACQ-2140	DEAERATOR	717*	02JAN12	30SEP14
2 36 PCS	EACQ-2150	ACQUISITION STRATEGY DEVELOPMENT	65	02JAN12*	30MAR12
2 38 PCS	EACQ-2160	ORDER MATERIAL, MANUF, TRANSPORT	652	02APR12	30SEP14
2 38 PCS	EACQ-2170	DEAERATOR ONSITE	0		30SEP14
2 41 000 - LICENSING & PERMITTING TO CONSTRUCT					
2 41 PM2	ELIC-1010	PROJECT MANAGEMENT	2,480*	01OCT07	31MAR17
2 41 NRC	ELIC-1020	NRC LICENSING/STATE LOCAL PERMITS	2,480*	01OCT07	31MAR17
	ELIC-1022	REGULATORY MANAGEMENT PLAN PREPARATION/ISSUE	328	01OCT07	31DEC08
	ELIC-1025	PREAPPLICATION INTERACTIONS WITH NRC	1,110	01OCT07	30DEC11
	ELIC-1030	APPLICATIONS PREPARATION	957	01OCT07	31MAY11
	ELIC-1040	NGNP COL APPLICATION	1	01OCT07	01OCT07
	ELIC-1050	PREPARATION COL APPLICATION	86	01FEB12	30MAY12
	ELIC-1055	SUBMIT COL APPLICATION	0		30MAY12
	ELIC-1060	NGNP EARLY SITE PERMIT/LWA APPLICATION	1,045*	01OCT07	30SEP11
	ELIC-1070	SITE GEOTECHNICAL INVESTIGATION	522	01JUL08	30JUN10
	ELIC-1080	ENVIRONMENTAL ANALYSIS	653	01OCT07	31MAR10
	ELIC-1090	APPLICATION PREPARATION	327	01JUL10	30SEP11
	ELIC-1095	SUBMIT ESP APPLICATION	0		30SEP11
	ELIC-1100	NRC REVIEW	957*	03OCT11	02JUN15
	ELIC-1110	NRC REVIEW OF EARLY SITE PERMIT APPLICATION	455	03OCT11	28JUN13
	ELIC-1120	SAFETY REVIEW	260*	03OCT11	28SEP12
	ELIC-1130	DOCKETING REVIEW	21	03OCT11	31OCT11
	ELIC-1140	STAFF REVIEW - DRAFT SER	109	01NOV11	30MAR12
	ELIC-1150	STAFF REVIEW - FINAL SER	130	02APR12	28SEP12
	ELIC-1160	ENVIRONMENTAL REVIEW	260*	03OCT11	28SEP12
	ELIC-1170	NOTICE OF INTENT TO PREPARE EIS	21	03OCT11	31OCT11
	ELIC-1180	DRAFT EIS	109	01NOV11	30MAR12
	ELIC-1190	FINAL EIS	130	02APR12	28SEP12
	ELIC-1200	ACRS REVIEW	175	01MAR12*	31OCT12
	ELIC-1210	ADMINISTRATIVE REVIEW	172	01NOV12	28JUN13
	ELIC-1220	RECEIPT OF ESP/LWA DECISION	0		28JUN13
	ELIC-1250	NRC REVIEW OF COL APPLICATION	784	31MAY12	02JUN15
	ELIC-1260	TECHNICAL REVIEW	542*	31MAY12	27JUN14
	ELIC-1270	DOCKETING REVIEW	21	31MAY12	28JUN12
	ELIC-1280	NRC REVIEW, DEVELOPS RAIs	195	29JUN12	28MAR13
	ELIC-1290	NRC ISSUES 1ST ROUND OF RAIs	0		28MAR13
	ELIC-1300	NGNP PROJECT RESPONSE PERIOD	45	29MAR13	30MAY13
	ELIC-1310	NRC ISSUES 2ND ROUND OF RAIs	86	31MAY13	27SEP13

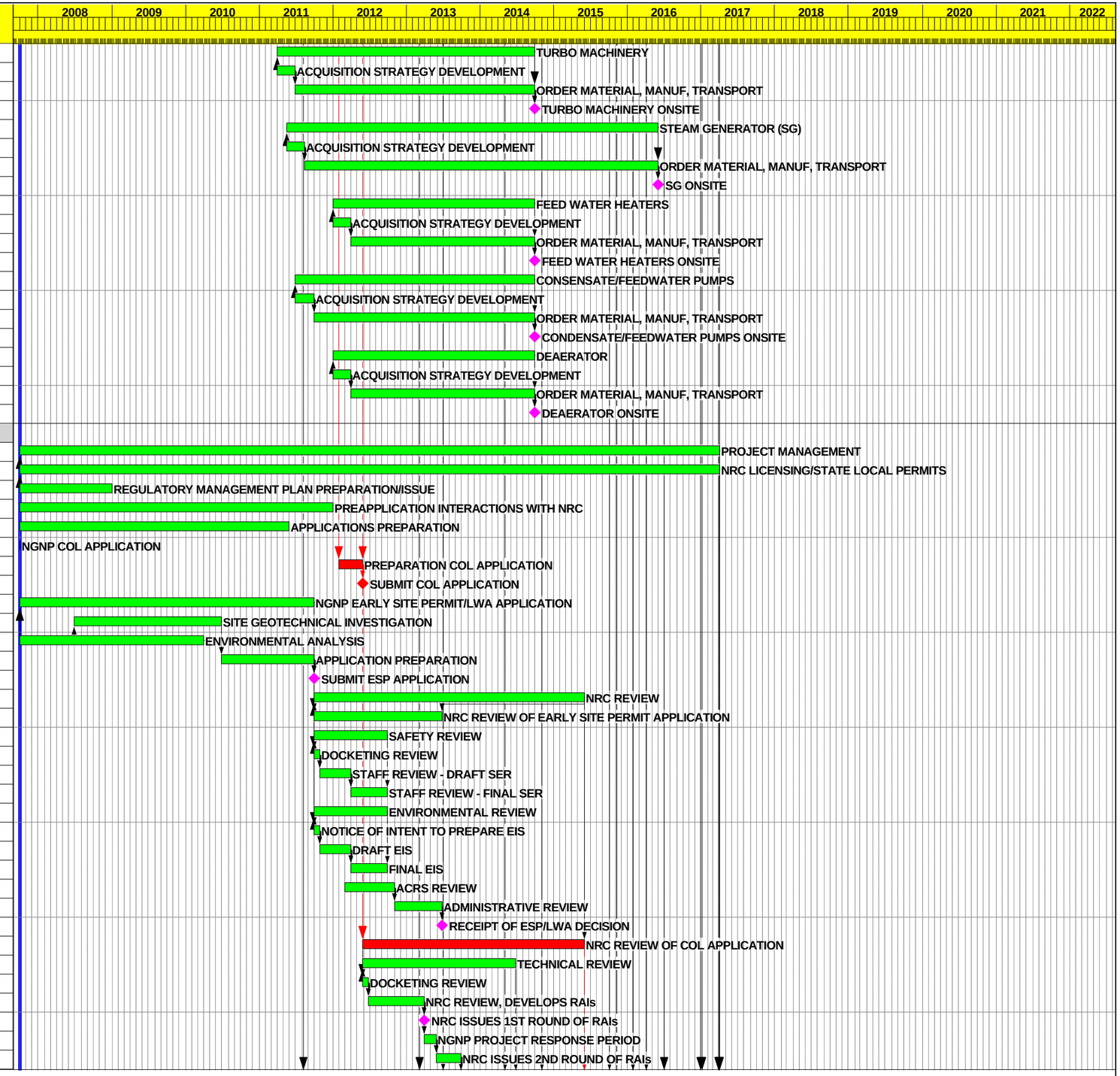

Start Date	01OCT07	Early Bar
Finish Date	29OCT21	Progress Bar
Data Date	01OCT07	Critical Activity
Run Date	18MAY07 14:15	

© Primavera Systems, Inc.

NGNP

Sheet 5 of 8

PRECONCEPTUAL NGNP SCHEDULE

Date	Revision	Checked	Approved

WBS	Activity ID	Activity Description	Orig Dur	Early Start	Early Finish
	ELIC-1320	NGNP PROJECT RESPONSE PERIOD	66	30SEP13	30DEC13
	ELIC-1330	DRAFT SER ISSUED	0		30DEC13
	ELIC-1340	NGNP PROJECT REVIEW OF SER	64	31DEC13	28MAR14
	ELIC-1350	NRC PREPARES FINAL SER	65	31MAR14	27JUN14
	ELIC-1355	END OF TECHNICAL REVIEW	0		27JUN14
	ELIC-1360	NGNP MEETINGS WITH NRC STAFF & ACRS	218	30SEP13	30JUL14
	ELIC-1370	ADMINISTRATIVE REVIEW, MANDATORY HEARING	216	31JUL14	28MAY15
	ELIC-1375	END OF ADMINISTRATIVE REVIEW	0		28MAY15
	ELIC-1379	COL DECISION TO START CONSTRUCTION	0	29MAY15	
2 41 SLE	ELIC-1380	STATE/LOCAL ENVIRONMENTAL PERMITS	1,696*	01OCT09	31MAR16
	ELIC-1390	NHSF, PCF & BALANCE OF PLANT	782*	01OCT09	28SEP12
	ELIC-1400	PREPARE PERMITS	261	01OCT09*	30SEP10
	ELIC-1410	STATE/LOCAL AGENCY REVIEW	521	01OCT10	28SEP12
	ELIC-1415	ENVIRONMENTAL PERMITS ISSUED	0		28SEP12
	ELIC-1420	PERMITS FOR OPERATION	587*	01JAN15	31MAR17
	ELIC-1430	PREPARE PERMITS FOR OPERATION	195	01JAN15*	30SEP15
	ELIC-1440	STATE/LOCAL AGENCY REVIEW FOR OPERATION	392	01OCT15	31MAR17
	ELIC-1450	HYDROGEN PRODUCTION FACILITY	392*	01OCT14	31MAR16
	ELIC-1460	PERMIT PREPARATION	66	01OCT14*	31DEC14
	ELIC-1470	STATE/LOCAL AGENCY REVIEW	326	01JAN15	31MAR16
	ELIC-1475	HYDROGEN PLANT ENV. PERMITS ISSUED	0		31MAR16
3 00 000 - CONSTRUCTION					
3 42 000 - LICENSE & PERMIT TO OPERATE					
3 42 PM2	CLIC-1000	PROJECT MANAGEMENT	871*	29MAY15	28SEP18
3 42 NHS	CLIC-1010	NUCLEAR HEAT SUPPLY FACILITY	1	01OCT07	01OCT07
	CLIC-1020	NRC INSPECTION DURING CONSTRUCTION	871	29MAY15	28SEP18
3 52 000 - CONSTRUCTION					
3 52 PM2	CNST-1000	PROJECT MANAGMENT	1,044*	29SEP14	27SEP18
	CNST-1001	OWNER'S STARTUP COSTS	717	01JAN15*	29SEP17
	CNST-1002	OVERALL SITE & BOP	1,110*	01JUL13	29SEP17
	CNST-1004	NHSF	803*	03NOV14	29NOV17
	CNST-1006	HPF	391*	01JUL16	29DEC17
	CNST-1008	PCS	611*	29MAY15	29SEP17
OVERALL SITE & BOP					
3 52 BOP	CNST-1010	OVERALL SITE & BOP	1,195*	04MAR13	29SEP17
	CNST-1015	MOBILIZE SITEWORK CONTRACTOR	65	04MAR13	31MAY13
	CNST-1020	SITE PREPARATION & FOUNDATIONS	325	01JUL13	26SEP14
	CNST-1030	BUILDINGS & BALANCE OF PLANT	436	29SEP14	30MAY16
	CNST-1040	PROCESS PIPING, EQUIPMENT INSTALLATION, MECH.	435*	31MAY16	29JAN18
	CNST-1050	AUXILIARIES	435	31MAY16	29JAN18
	CNST-1060	PIPELINES & INTERCONNECTIONS	435	31MAY16	29JAN18
	CNST-1070	SUBSTATION & POWER DISTRIBUTION	391	31MAY16	28NOV17
	CNST-1080	INSTRUMENTATION & CONTROLS	391	01APR16	29SEP17
NUCLEAR HEAT SUPPLY FACILITY					
3 52 NHS	CNST-1090	NUCLEAR HEAT SUPPLY FACILITY	824*	03JUN15	30JUL18
	CNST-1100	CIVIL MOBILIZATION	150	03NOV14	29MAY15
	CNST-1110	CIVILS	283	03JUN15	01JUL16
	CNST-1120	CONSTRUCTION BUILDING & FACILITIES	651	03JUN15	29NOV17
	CNST-1130	PROCESS PIPING, EQUIPMENT INSTALLATION, MECH	566*	01OCT15	30NOV17
	CNST-1140	MOBILIZE MECH	131	01OCT15	31MAR16
	CNST-1150	AUXILIARIES	435	01APR16	30NOV17
	CNST-1160	REACTOR SYSTEMS	435	01APR16	30NOV17
	CNST-1170	MAIN SUPPORT SYSTEMS	435	01APR16	30NOV17
	CNST-1180	SPECIAL TOOLS & EHS	435	01APR16	30NOV17

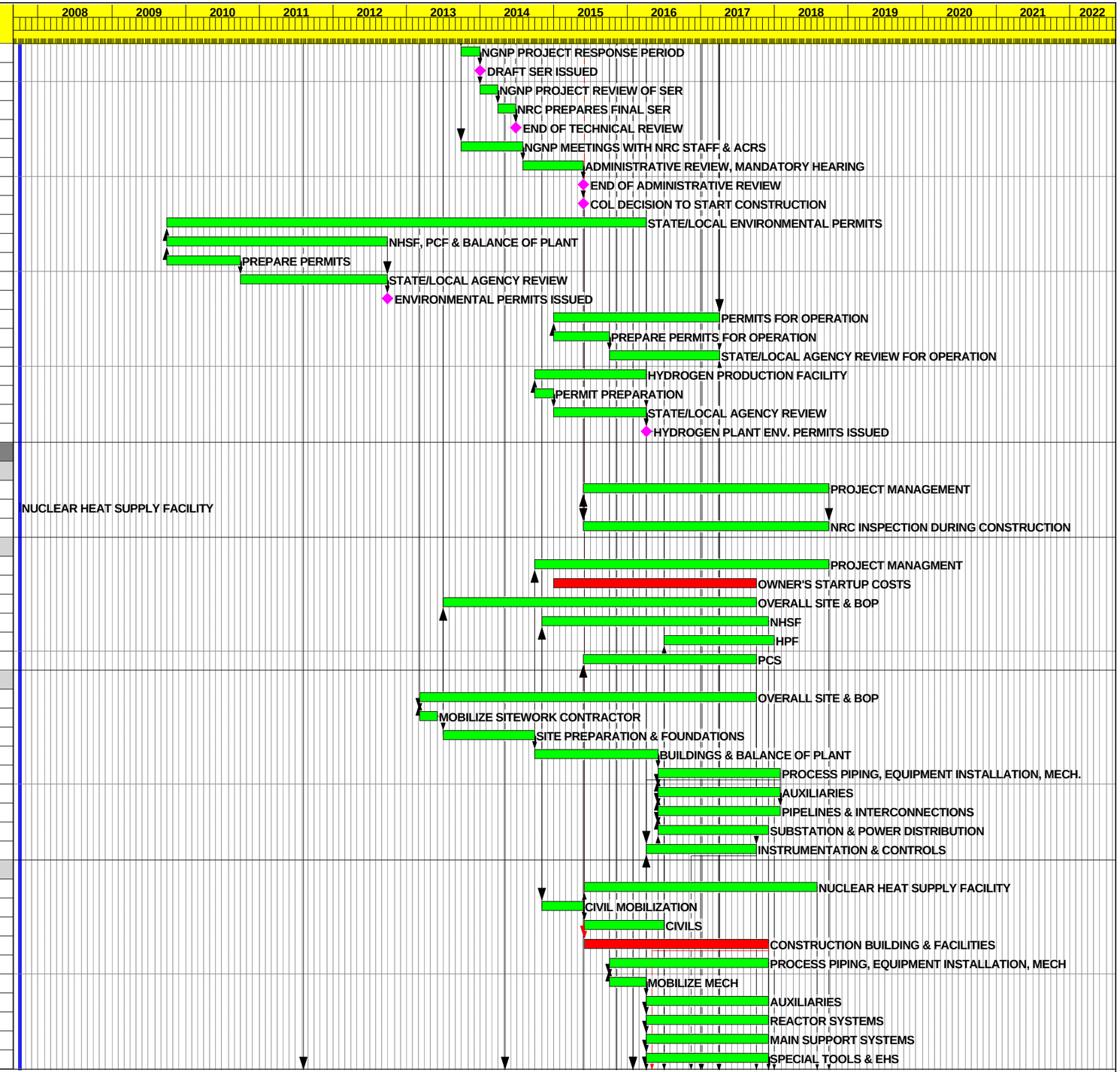

Start Date	01OCT07
Finish Date	29OCT21
Data Date	01OCT07
Run Date	18MAY07 14:15

Early Bar
Progress Bar
Critical Activity

NGNP

PRECONCEPTUAL NGNP SCHEDULE

Date	Revision	Checked	Approved

© Primavera Systems, Inc.

WBS	Activity ID	Activity Description	Orig Dur	Early Start	Early Finish
	CNST-1190	IHX & SECONDARY HELIUM LOOP	435	01APR16	30NOV17
	CNST-1200	INITIAL FILLS, SPARES & CONSUMABLES	435	01APR16	30NOV17
	CNST-1220	MOBILIZE ELECTRICAL	66	01FEB16	02MAY16
	CNST-1230	ELECTRICAL	412	03MAY16	29NOV17
	CNST-1250	MOBILIZE I&C	66	29JAN16	29APR16
	CNST-1260	INSTRUMENTATION & CONTROLS	412	02MAY16	28NOV17
	CNST-1270	DEMOBILIZATION	174	29NOV17	30JUL18
HYDROGEN PRODUCTION FACILITY					
3 52 HPF	CNST-1280	HYDROGEN PRODUCTION FACILITY	525*	01JUL16	05JUL18
	CNST-1285	MOBILIZE CIVIL	65	01APR16	30JUN16
	CNST-1290	BUILDINGS & BALANCE OF PLANT	391	01JUL16	29DEC17
	CNST-1300	PROCESS PIPING, EQUIPMENT INSTALLATION, MECH.	456*	01APR16	29DEC17
	CNST-1310	MOBILIZE MECH.	131	01APR16	30SEP16
	CNST-1320	DECOMPOSITION REACTOR & SYSTEM	325	03OCT16	29DEC17
	CNST-1330	ELECTROLYSIS SYSTEM	325	03OCT16	29DEC17
	CNST-1340	INITIAL FILLS, SPARES & CONSUMABLES	65	02OCT17	29DEC17
	CNST-1345	MOBILIZE ELECTRICAL	65	02JAN17	31MAR17
	CNST-1350	ELECTRICAL	195	03APR17	29DEC17
	CNST-1355	MOBILIZE I&C	65	30DEC16	30MAR17
	CNST-1360	INSTRUMENTATION & CONTROLS	195	31MAR17	28DEC17
	CNST-1370	DEMOBILIZATION	175	03NOV17	05JUL18
POWER CONVERSION FACILITY					
3 52 PCF	CNST-1380	POWER CONVERSION FACILITY	611*	29MAY15	29SEP17
	CNST-1390	SITE DEVELOPMENT	132	29MAY15*	30NOV15
	CNST-1400	BUILDINGS & STRUCTURES	392	01DEC15	31MAY17
	CNST-1410	PROCESS PIPING, EQUIPMENT INSTALLATION, MECH.	455*	01JAN16	28SEP17
	CNST-1420	STEAM GENERATOR	435	01JAN16*	31AUG17
	CNST-1430	STEAM GENERATOR VENDOR PACKAGE	435	01JAN16	31AUG17
	CNST-1440	BALANCE OF PLANT	435	01JAN16	31AUG17
	CNST-1450	COOLING SYSTEM	435	29JAN16	28SEP17
	CNST-1460	ELECTRICAL	391	01APR16	29SEP17
	CNST-1470	INSTRUMENTATION & CONTROLS	391	01APR16	29SEP17
	CNST-1480	INTIAL FILLS, SPARES & CONSUMABLES	65	03JUL17	29SEP17
3 54 000 - MOCKUP & TESTING					
3 54 000	CTST-1000	MOCKUP & TESTING	1,109*	08AUG11	05NOV15
3 54 PM2	CTST-1010	PROJECT MANAGEMENT	1	01OCT07	01OCT07
3 54 HPF	CTST-1020	HYDROGEN PRODUCTION FACILITY	1,631*	08AUG11	06NOV17
	CTST-1030	DECOMPOSER PILOT TESTING	521	08AUG11*	05AUG13
	CTST-1040	ELECTROLYZER PILOT TESTING	392	07MAY14	05NOV15
	CTST-1050	HAND-OFF DEVELOPMENT TO VENDOR	0		05NOV15
	CTST-1060	ELECTROLYZER FULL SCALE DEMONSTRATION AT NGNP	522	06NOV15	06NOV17
3 66 000 - TRAINING					
3 66 000	CTRN-1000	TRAINING	1	01OCT07	01OCT07
3 66 PM2	CTRN-1010	PROJECT MANAGEMENT	1	01OCT07	01OCT07
3 66 NHS	CTRN-1020	NUCLEAR HEAT SUPPLY FACILITY	782*	03FEB14	31JAN17
	CTRN-1030	NRC OPERATOR CERTIFICATION TRAINING	782	03FEB14*	31JAN17
	CTRN-1040	OPERATORS PASS LICENSE TEST	0		31JAN17
3 66 HPF	CTRN-1050	HYDROGEN PRODUCTION FACILITY	130	07NOV17	07MAY18
4 00 000 - INITIAL OPERATIONS & INSPECTION					
4 72 000 - PRE-COMMISSIONING (COLD START-UP)					
4 72 PM2	IOPR-1010	PROJECT MANAGEMENT	1	01OCT07	01OCT07
4 72 BOP	IOPR-1020	OVERALL SITE & BOP	130*	10NOV16	10MAY17
	IOPR-1030	PRE-COMMISSIONING	130	10NOV16	10MAY17
4 72 NHS	IOPR-1040	NUCLEAR HEAT SUPPLY FACILITY	414*	02MAY16	30NOV17

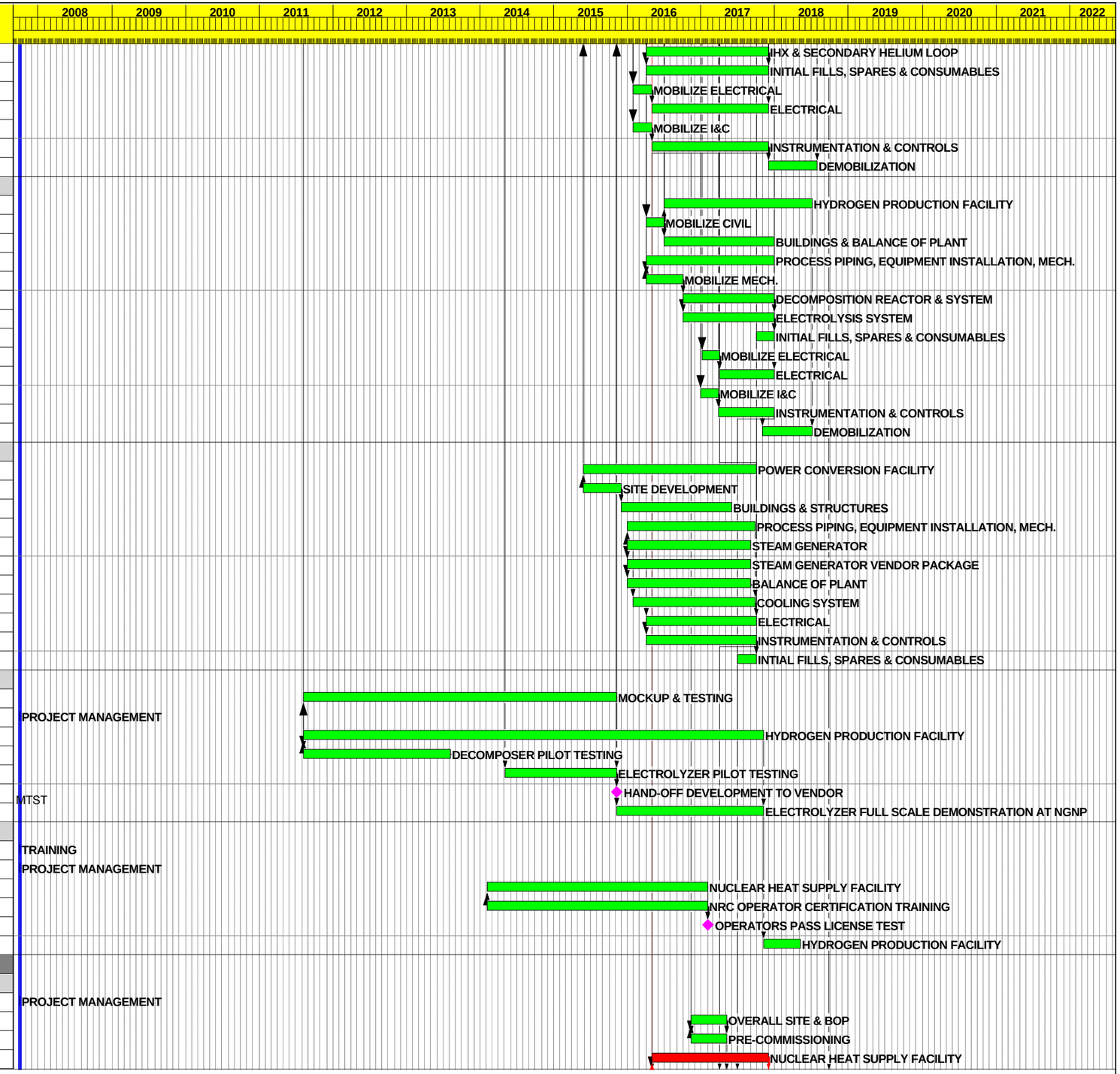

Start Date	01OCT07	Early Bar	
Finish Date	29OCT21	Progress Bar	
Data Date	01OCT07	Critical Activity	
Run Date	18MAY07 14:15		

© Primavera Systems, Inc.

NGNP

Sheet 7 of 8

PRECONCEPTUAL NGNP SCHEDULE

Date	Revision	Checked	Approved

WBS	Activity ID	Activity Description	Orig Dur	Early Start	Early Finish
	IOPR-1050	PRE-OPERATIONAL TESTING	414	02MAY16	30NOV17
	IOPR-1060	PLANT READY FOR FUEL LOADING	0		30NOV17
4 72 HPF	IOPR-1070	HYDROGEN PRODUCTION FACILITY	130*	30JUN17	28DEC17
	IOPR-1080	PRE-COMMISSIONING	130	30JUN17	28DEC17
4 72 PCF	IOPR-1090	POWER CONVERSION FACILITY	130*	03APR17	29SEP17
	IOPR-1100	PRE-COMMISSIONING	130	03APR17	29SEP17
4 73 000 -COMMISSIONING & STARTUP (HOT START-UP)					
4 73 PM2	IOPR-1120	PROJECT MANAGEMENT	1	01OCT07	01OCT07
4 73 BOP	IOPR-1130	OVERALL SITE & BOP	195*	11MAY17	07FEB18
	IOPR-1140	STARTUP & TESTING	195	11MAY17	07FEB18
4 73 NHS	IOPR-1150	NUCLEAR HEAT SUPPLY FACILITY	216*	01DEC17	28SEP18
	IOPR-1160	INITIAL FUEL LOAD TO LOWER POWER TESTING	64	01DEC17	28FEB18
	IOPR-1170	1ST SYNC TO GRID	22	01MAR18	30MAR18
	IOPR-1180	POWER ASCENSION TESTING	65	02APR18	29JUN18
	IOPR-1190	MAINTENANCE OUTAGE	22	02JUL18	31JUL18
	IOPR-1200	PLANT ACCEPTANCE TESTING	43	01AUG18	28SEP18
4 73 HPF	IOPR-1210	HYDROGEN PRODUCTION FACILITY	195*	29DEC17	27SEP18
	IOPR-1220	STARTUP & TESTING	195	29DEC17	27SEP18
4 73 PCF	IOPR-1230	POWER CONVERSION FACILITY	195*	02OCT17	29JUN18
	IOPR-1240	STARTUP & TESTING	195	02OCT17	29JUN18
	IOPR-1250	DOE MILESTONE CD-4: APPROVAL FOR COMM. OPER.	0		27SEP18
5 00 000 - OPERATE COMMERCIALLY					
5 74 000 - OPERATE PLANT					
5 74 PM2	OPRC-1010	PROJECT MANAGEMENT	784	01OCT18	30SEP21
5 74 BOP	OPRC-1020	OVERALL SITE & BOP	784	28SEP18	29SEP21
5 74 NHS	OPRC-1030	NUCLEAR HEAT SUPPLY FACILITY	784	28SEP18	29SEP21
5 74 HPF	OPRC-1040	HYDROGEN PRODCUTION FACILITY	784	28SEP18	29SEP21
5 74 PCF	OPRC-1050	POWER CONVERSION FACILITY	784	28SEP18	29SEP21
5 76 000 - SHUTDOWN & INSPECTIONS					
5 76 PM2	OPRC-2010	PROJECT MANAGEMENT	0	01OCT21	
5 76 BOP	OPRC-2020	OVERALL SITE & BOP	0	30SEP21	
5 76 NHS	OPRC-2030	NUCLEAR HEAT SUPPLY FACILITY	0	30SEP21	
5 76 HPF	OPRC-2040	HYDROGEN PRODUCTION FACILITY	0	30SEP21	
5 76 PCF	OPRC-2050	POWER CONVERSION FACILITY	0	30SEP21	
5 75 000 - MAINTAIN PLANT					
5 75 PM2	OPRC-3010	PROJECT MANAGEMENT	21	01OCT21	29OCT21
5 75 BOP	OPRC-3020	OVERALL SITE & BOP	21	30SEP21	28OCT21
5 75 NHS	OPRC-3030	NUCLEAR HEAT SUPPLY FACILITY	21	30SEP21	28OCT21
5 75 HPF	OPRC-3040	HYDROGEN PRODUCTION FACILITY	21	30SEP21	28OCT21
5 75 PCF	OPRC-3050	POWER CONVERSION FACILITY	21	30SEP21	28OCT21

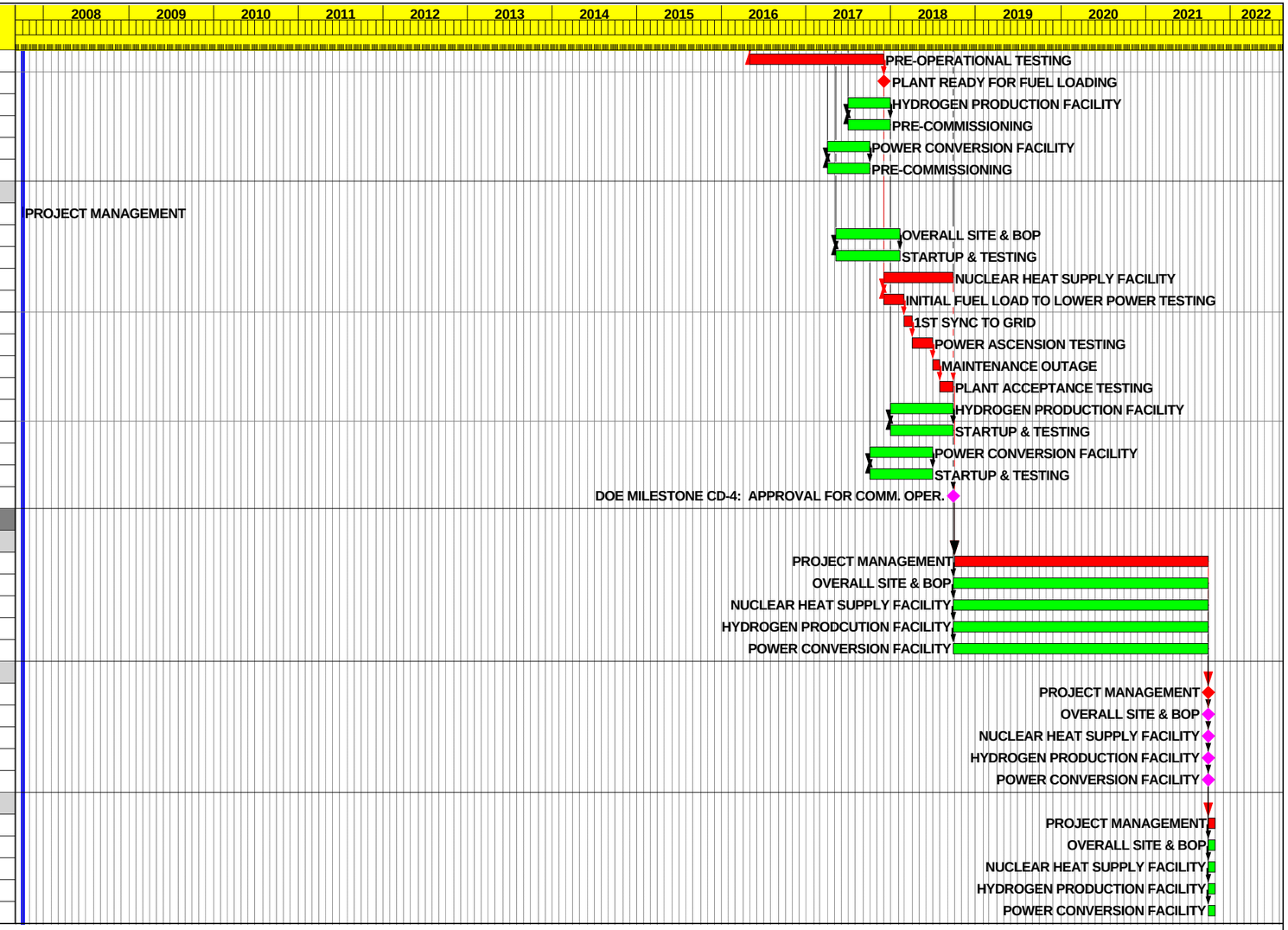

Start Date	01OCT07
Finish Date	29OCT21
Data Date	01OCT07
Run Date	18MAY07 14:15

Early Bar
Progress Bar
Critical Activity

NGNP

Sheet 8 of 8

PRECONCEPTUAL NGNP SCHEDULE

Date	Revision	Checked	Approved

© Primavera Systems, Inc.

WBS	Activity ID	Activity Description	Orig Dur	Early Start	Early Finish	Predecessors	Successors
REFERENCE BASELINES							
DEMONSTRATION POWER PLANT (ZA)							
	REFD-0100	PRE-PRODUTION FUEL AVAILABLE FOR IRRADIATION	0	17DEC07*			
	REFD-0200	PRODUCTION FUEL AVAILABLE FOR IRRADIATION	0	11JUN12*			
	REFD-0300	DPP FUEL QUALIFICATION 5% FIMA (RIG 1)	0	13OCT14*			
	REFD-0400	DPP FUEL QUALIFIATION 11.5% FIMA (RIGS 2,3 & 4)	0	11JUN18*			
	REFD-1000	DPP INITIAL FUEL LOAD	0	02SEP13*			
	REFD-1010	DPP HANDOVER FOR COMMERCIAL OPERATION	0		01DEC14*		
	REFD-1020	DPP EQUILIBRIUM FUEL	0		01DEC15*		
FUEL MANUFACTURING PILOT PLANT (ZA)							
	REFF-1000	INITIAL FUEL AVAILABLE FROM PBMR ACF	0	15JAN08*			
	REFF-1010	FUEL AVAILABLE - PBMR PFP FOR FUEL IRRADIATION	0	11JUL12*			ENGD-1060*
	REFF-1015	IRRADIATION PROGRAM STARTS	0	01JAN08*			ENGD-1030*, ENGD-1050*
	REFF-1020	PBMR PFP FUEL READY TO SUPPLY TO NGNP	0	01DEC14*			
COMMERCIAL PLANTS (U.S.)							
	REFC-1000	PRE-APPLICATION, DESIGN, SAR, DC	545	01OCT07	30OCT09		ENGD-1770*
NGNP PROJECT							
2 00 000 ENGINEERING/DESIGN							
2 22 000 - TECHNOLOGY DEVELOPMENT							
2 22 PM2	ENGD-1010	PROJECT MANAGEMENT	2,200*	01OCT07	04MAR16	ENGD-1020*	ENGD-1100, ENGD-1140, ENGD-1180, ENGD-1575*
NUCLEAR HEAT SUPPLY FACILITY							
2 22 NHS	ENGD-1020	NUCLEAR HEAT SUPPLY FACILITY	2,085*	01OCT07	25SEP15		ENGD-1010*, ENGD-1023, ENGD-1240*
	ENGD-1023	NHS R&D PLAN	66	01OCT07	31DEC07	ENGD-1020	
	ENGD-1025	PIGGY BACK IRRADIATION	1,560*	01JAN08	23DEC13	ENGD-1030*	ENGD-1040*
	ENGD-1030	AGR-2 (PREP, IRRADIATE, DECAY, PIE)	1,040	01JAN08	26DEC11	REFF-1015*	ENGD-1025*, ENGD-1040*
	ENGD-1040	AGR-3 (PREP, IRRADIATE, DECAY, PIE)	1,300	30DEC08	23DEC13	ENGD-1025*, ENGD-1030*	
	ENGD-1050	PRE-PRODUCTION FUEL IRRADIATION	1,045	01JAN08	02JAN12	REFF-1015*	
	ENGD-1060	PRODUCTION FUEL IRRADIATION	1,045	13JUL11	14JUL15	REFF-1010*	
	ENGD-1080	IHX - METALLIC	2,093*	01OCT07	07OCT15	ENGD-1100*	ENGD-1150*
	ENGD-1090	MATERIALS DEVELOPMENT & QUALIFICATION	785*	01OCT07	01OCT10	ENGD-1100*	ENGD-1100*
	ENGD-1100	ALLOY 617 SPECIFICATION & TESTING	785	01OCT07	01OCT10	ENGD-1010, ENGD-1090*	ENGD-1080*, ENGD-1090*, ENGD-1110*
	ENGD-1110	ALLOY 230 SPECIFICATION & TESTING	785	01OCT07	01OCT10	ENGD-1100*	
	ENGD-1120	METHODS DEVELOP, VERIFICATION & VALIDATION	2,093*	01OCT07	07OCT15	ENGD-1140*	ENGD-1150*
	ENGD-1130	IHX DESIGN METHODS & CRITERIA	483	01APR09*	04FEB11	ENGD-1140	
	ENGD-1140	IHX PERFORMANCE VERIFICATION	2,093	01OCT07	07OCT15	ENGD-1010	ENGD-1120*, ENGD-1130, ENGD-1150*
	ENGD-1150	IHX CODE CASE	435	06FEB14	07OCT15	ENGD-1080*, ENGD-1120*, ENGD-1140*	
	ENGD-1160	IHX - CERAMIC	2,085*	01OCT07	25SEP15	ENGD-1180*	ENGD-1240*
	ENGD-1170	MATERIALS DEVELOPMENT & QUALIFICATION	520*	01OCT07	25SEP09	ENGD-1180*	ENGD-1190*
	ENGD-1180	REFERENCE TECHNOLOGY SELECTION	130	01OCT07	28MAR08	ENGD-1010	ENGD-1160*, ENGD-1170*, ENGD-1190*,
	ENGD-1190	MATERIALS PROPERTIES DATABASE	390	31MAR08	25SEP09	ENGD-1170*, ENGD-1180*	
	ENGD-1200	METHODS DEVELOP, VERIFICATION & VALIDATION	1,955*	31MAR08	25SEP15	ENGD-1210*	ENGD-1240*
	ENGD-1210	DESIGN METHODS & CRITERIA	650	31MAR08	24SEP10	ENGD-1180*	ENGD-1200*, ENGD-1220*, ENGD-1230*
	ENGD-1220	PERFORMANCE VERIFICATION	915	29MAR10	27SEP13	ENGD-1210*	
	ENGD-1230	MANUFACTURING TECHNOLOGY	650	31MAR08	24SEP10	ENGD-1210*	ENGD-1240*, ENGD-1250*
	ENGD-1240	CODES AND STANDARDS	1,305	27SEP10	25SEP15	ENGD-1020*, ENGD-1160*, ENGD-1200*,	
	ENGD-1250	SECONDARY HTS HELIUM MIXER	520	04OCT10	28SEP12	ENGD-1230*	
	ENGD-1260	SECONDARY HTS HELIUM MIXING CHAMBER	520	04OCT10*	28SEP12	ENGD-1180	
	ENGD-1265	SUBMIT NHS R&D FINAL REPORT	0		31DEC15*	ENGD-1644*	
HYDROGEN PRODUCTION FACILITY							
2 22 HPS	ENGD-1270	HYDROGEN PRODUCTION FACILITY	2,200*	01OCT07	04MAR16	ENGD-1300*	ENGD-1510*
	ENGD-1275	HPF R&D PLAN	45	01OCT07	30NOV07		
	ENGD-1280	R&D IDENTIFIED DURING CONCEPTUAL DESIGN	1,434	01SEP08	27FEB14	ENGD-1300*	
	ENGD-1290	BASIC DATA	420*	01OCT07	08MAY09	ENGD-1300*	ENGD-1310, ENGD-1315*
	ENGD-1300	THERMODYNAMIC DATA	240	01OCT07	29AUG08		ENGD-1270*, ENGD-1280*, ENGD-1290*,
	ENGD-1310	REACTION KINETICS DATA	240	01OCT07	29AUG08	ENGD-1290, ENGD-1300*	ENGD-1315*
	ENGD-1315	DATA ANALYSIS AND MODEL	180	01SEP08	08MAY09	ENGD-1290*, ENGD-1310*	
	ENGD-1320	DECOMPOSER	1,485*	01OCT07	07JUN13	ENGD-1330*	ENGD-1345*, ENGD-1350
	ENGD-1330	CATALYST	480	01OCT07	31JUL09		ENGD-1320*, ENGD-1340*, ENGD-1780
	ENGD-1340	MATERIALS OF CONSTRUCTION	1,005	01OCT07	05AUG11	ENGD-1330*	CTST-1030*, ENGD-1345*, ENGD-1350*,
	ENGD-1345	PILOT TESTING	480	08AUG11	07JUN13	ENGD-1320*, ENGD-1340*	
	ENGD-1350	DESIGN CODE CASE	400	22MAR10	30SEP11	ENGD-1320, ENGD-1340*	ENGD-1780
	ENGD-1360	SULFURIC ACID CONCENTRATOR	240	24NOV08	23OCT09	ENGD-1300*	ENGD-1500*, ENGD-1780
	ENGD-1370	ELECTROLYZER	2,400*	01OCT07	09DEC16	ENGD-1380*	ENGD-1430, ENGD-1437*
	ENGD-1380	CATALYST LOADING TESTS	480	01OCT07	31JUL09		ENGD-1370*, ENGD-1390*, ENGD-1400*
	ENGD-1390	CELL MEMBRANE DEVELOPMENT	480	01OCT07	31JUL09	ENGD-1380*	ENGD-1400*
	ENGD-1400	HAND-OFF RESEARCH TO DEVELOPMENT LAB	0		31JUL09	ENGD-1380*, ENGD-1390*	ENGD-1410*
	ENGD-1410	CELL DEVELOPMENT	360	03AUG09	17DEC10	ENGD-1400*	ENGD-1420*
	ENGD-1420	PROTOTYPE CELL	360	20DEC10	04MAY12	ENGD-1410*	ENGD-1430*
	ENGD-1430	PILOT CELL	360	07MAY12	20SEP13	ENGD-1370, ENGD-1420*	CTST-1040, ENGD-1432*, ENGD-1450, ENGD-1780*
	ENGD-1432	PILOT PLANT	360	23SEP13	06FEB15	ENGD-1430*	ENGD-1435*
	ENGD-1435	HAND-OFF: DEVELOPMENT TO VENDOR	0		06FEB15	ENGD-1432*	ENGD-1437*
	ENGD-1437	BUILD FULL-SCALE DEMO AT IDAHO	480	09FEB15	09DEC16	ENGD-1370*, ENGD-1435*	
	ENGD-1440	FEED PURIFICATION	240*	01APR13	28FEB14	ENGD-1460*, ENGD-1470	ENGD-1490*
	ENGD-1450	SYSTEM TOLERANCE TO IMPURITIES	175*	01APR13	29NOV13	ENGD-1430, ENGD-1460*	ENGD-1470*
	ENGD-1460	DECOMPOSER	45	01APR13*	31MAY13		ENGD-1440*, ENGD-1450*, ENGD-1480, ENGD-1490
	ENGD-1470	ELECTROLYZER	44	01OCT13*	29NOV13	ENGD-1450*	ENGD-1440, ENGD-1480*, ENGD-1490*
	ENGD-1480	SULFURIC ACID PURIFICATION SYSTEM	65	02DEC13	28FEB14	ENGD-1460, ENGD-1470*	
	ENGD-1490	WATER PURIFICATION SYSTEM	65	02DEC13	28FEB14	ENGD-1440*, ENGD-1460, ENGD-1470*	ENGD-1510
	ENGD-1500	SO2 ABSORBERS	195	24NOV08	21AUG09	ENGD-1360*	
	ENGD-1510	PRODUCT PURIFICATION TESTING	86	06NOV15	04MAR16	CTST-1030, CTST-1040*, ENGD-1270*, ENGD-1340,	ENGD-1575*, ENGD-1850*
	ENGD-1520	OTHER MATERIALS	522	03NOV08*	02NOV10		ENGD-1540*, ENGD-1850
	ENGD-1530	SENSING & CONTROL	480*	27SEP10	27JUL12	ENGD-1540*	ENGD-1570*
	ENGD-1540	SENSOR PILOTING	240	27SEP10	26AUG11	ENGD-1520*	ENGD-1530*, ENGD-1560*
	ENGD-1560	VALVE DEVELOPMENT	240	27SEP10	26AUG11	ENGD-1540*	ENGD-1570*
	ENGD-1570	VALVE PILOTING	240	29AUG11	27JUL12	ENGD-1530*, ENGD-1560*	
	ENGD-1575	SUBMIT HPF R&D FINAL REPORT	0		04MAR16	ENGD-1010*, ENGD-1510*	
POWER CONVERSION FACILITY							
	ENGD-1585	PCF R&D PLAN	45	01OCT07	30NOV07		
2 22 PCS	ENGD-1590	PCS	1,307	01OCT07	02OCT12		ENGD-1595*
	ENGD-1595	SUBMIT PCF R&D FINAL REPORT	0		02OCT12	ENGD-1590*	
2 32 000 - CONCEPTUAL DESIGN							
2 32 000	ENGD-1600	CONCEPTUAL DESIGN	392*	01OCT07	31MAR09	ENGD-1610*	ENGD-1610*, ENGD-1645
2 32 PM2	ENGD-1610	PROJECT MANAGEMENT	392	01OCT07	31MAR09	ENGD-1600*	ENGD-1600*, ENGD-1620*, ENGD-1640*,
2 32 PSE	ENGD-1620	OVERALL PLANT INTEGRATION	392	01OCT07	31MAR09	ENGD-1610*	ENGD-1630*
2 32 BOP	ENGD-1630	OVERALL SITE & BOP	392	01OCT07	31MAR09	ENGD-1620*	
2 32 NHS	ENGD-1640	NUCLEAR HEAT SUPPLY FACILITY	2,154*	01OCT07	31DEC15	ENGD-1610*, ENGD-1642*	ENGD-1644*
	ENGD-1642	CONCEPTUAL ENGINEERING	392	01OCT07	31MAR09		ENGD-1640*, ENGD-1644*, ENGD-1770,
	ENGD-1644	ENGINEERING SUPPORT DURING R&D	1,762	01APR09	31DEC15	ENGD-1640*, ENGD-1642*	ENGD-1265*
	ENGD-1645	DOE MILESTONE CD-1	0		28SEP07	ENGD-1600	ENGD-1700
2 32 HPF	ENGD-1650	HYDROGEN PRODUCTION FACILITY	1,663*	01OCT07	12FEB14	ENGD-1660*	ENGD-1670*
	ENGD-1660	CONCEPTUAL ENGINEERING	392	01OCT07	31MAR09	ENGD-1610*	ENGD-1650*, ENGD-1670*, ENGD-1780
	ENGD-1670	ENGINEERING SUPPORT DURING R&D	1,271	01APR09	12FEB14	ENGD-1650*, ENGD-1660*	
	ENGD-1675	DOE MILESTONE CD-1A	0		19NOV08*		
2 32 PCF	ENGD-1680	POWER CONVERSION FACILITY	1,045*	01OCT07	30SEP11	ENGD-1685*	ENGD-1688*
	ENGD-1685	CONCEPTUAL ENGINEERING	392	01OCT07	31MAR09		ENGD-1680*, ENGD-1688*
	ENGD-1688	ENGINEERING SUPPORT DURING R&D	653	01APR09	30SEP11	ENGD-1680*, ENGD-1685*	
2 33 000 - PRELIMINARY DESIGN							
2 33 000	ENGD-1700	PRELIMINARY DESIGN	522*	01APR09	31MAR11	ENGD-1645, ENGD-1710*	ENGD-1710*, ENGD-1800
	ENGD-1705	Design Freeze to Support Final Safety	0		31MAR11	ENGD-1760*, ENGD-1770*, ENGD-1790*	ENGD-1740*
2 33 PM2	ENGD-1710	PROJECT MANAGEMENT	522	01APR09	31MAR11	ENGD-1610*, ENGD-1700*	ENGD-1700*, ENGD-1810*
2 33 PSE	ENGD-1720	OVERALL PLANT INTEGRATION	522*	01APR09	31MAR11	ENGD-1730*	ENGD-1730*
	ENGD-1730	PRELIMINARY ENGINEERING & SAFETY ANALYSIS	522	01APR09	31MAR11	ENGD-1610*, ENGD-1720*	ENGD-1720*, ENGD-1740*
	ENGD-1740	FINAL SAFETY ANALYSIS	218	01APR11	31JAN12	ENGD-1705*, ENGD-1730*	ELIC-1050*, ENGD-1750*
	ENGD-1750	PREPARE ISA SUMMARY	86	01FEB12	30MAY12	ENGD-1740*	ELIC-1050*
2 33 BOP	ENGD-1760	OVERALL SITE & BOP	522	01APR09	31MAR11	ENGD-1610*	ENGD-1705*
2 33 NHS	ENGD-1770	NUCLEAR HEAT SUPPLY FACILITY	521	02APR09	31MAR11	ENGD-1642, REFC-1000*	ENGD-1705*, ENGD-1795*
2 33 HPF	ENGD-1780	HYDROGEN PRODUCTION FACILITY	262	30SEP13	30SEP14	ENGD-1330, ENGD-1340, ENGD-1350, ENGD-1360,	ENGD-1798*, ENGD-1850
2 33 PCF	ENGD-1790	POWER CONVERSION FACILITY	522	01APR09	31MAR11	ENGD-1642*	ENGD-1705*
	ENGD-1795	DOE MILESTONE CD-2	0		31MAR11	ENGD-1770*	
	ENGD-1798	DOE MILESTONE CD-2A	0		30SEP14	ENGD-1780*	
2 34 000 - FINAL DESIGN							
2 34 000	ENGD-1800	FINAL DESIGN	782*	01APR11	31MAR14	ENGD-1700, ENGD-1810*	ENGD-1860*, ENGD-1870
2 34 PM2	ENGD-1810	PROJECT MANAGEMENT	782	01APR11	31MAR14	ENGD-1710*	ENGD-1800*, ENGD-1820*, ENGD-1830*,
2 34 PSE	ENGD-1820	OVERALL PLANT INTEGRATION	782	01APR11	31MAR14	ENGD-1810*	
2 34 BOP	ENGD-1830	OVERALL SITE & BOP	782	01APR11	31MAR14	ENGD-1810*	
2 34 NHS	ENGD-1840	NUCLEAR HEAT SUPPLY FACILITY	782	01APR11	31MAR14	ENGD-1810*	
2 34 HPF	ENGD-1850	HYDROGEN PRODUCTION FACILITY	392	16OCT14	15APR16	ENGD-1510*, ENGD-1520, ENGD-1780	ENGD-1880*
2 34 PCF	ENGD-1860	POWER CONVERSION FACILITY	782	01APR11	31MAR14	ENGD-1800*, ENGD-1810*	
	ENGD-1870	DOE MILESTONE CD-3	0	01JUL13		ELIC-1220*, ENGD-1800	
	ENGD-1880	DOE MILESTONE CD-3A	0	18APR16		ENGD-1850*	
ACQUISITION STRATEGIES & LONG LEAD PROCUREMENT							
2 36 000	EACQ-1000	ACQUISITION STRATEGIES	2,109*	01OCT09	31OCT17	EACQ-1380*	EACQ-1290*
2 36 PM2	EACQ-1010	PROJECT MANAGEMENT	2,109*	01OCT09	31OCT17	EACQ-1380*	EACQ-1290*
2 36 BOP	EACQ-1020	OVERALL SITE & BOP	587*	02JUL12	30SEP14	EACQ-1022*	EACQ-1025*
	EACQ-1022	WASTEWATER EVAPORATOR	587*	02JUL12	30SEP14	EACQ-1024*	EACQ-1020*, EACQ-1025*
2 36 BOP	EACQ-1024	ACQUISITION STRATEGY DEVELOPMENT	65	02JUL12*	28SEP12		EACQ-1022*, EACQ-1025*, EACQ-1028*
2 36 BOP	EACQ-1025	ORDER MATERIAL, MANUF, TRANSPORT	522	01OCT12	30SEP14	EACQ-1020*, EACQ-1022*, EACQ-1024*	EACQ-1026*
2 36 BOP	EACQ-1026	EVAPORATOR ONSITE	0		30SEP14	EACQ-1025*	
	EACQ-1027	CONSTRUCTION CONTRACT	1	01OCT07	01OCT07		
	EACQ-1028	SITEWORK	195	04JUN12	01MAR13	EACQ-1024*	CNST-1015*, CNST-1020
2 36 NHS	EACQ-1030	NUCLEAR HEAT SUPPLY FACILITY	2,109*	01OCT09	31OCT17	EACQ-1380*	EACQ-1290*
	EACQ-1200	TRAINING SIMULATOR	937*	01APR13	01NOV16	EACQ-1210*	EACQ-1230*
2 36 NHS	EACQ-1210	ACQUISITION STRATEGY DEVELOPMENT	131	01APR13*	30SEP13		EACQ-1200*, EACQ-1220*
2 38 NHS	EACQ-1220	ORDER SIMULATOR	0		01OCT13	EACQ-1210*	EACQ-1230*
2 38 NHS	EACQ-1230	MANUFACTURING, PROGRAMMING, TRANSPORT	805	02OCT13	01NOV16	EACQ-1200*, EACQ-1220*	EACQ-1240*
2 38 NHS	EACQ-1240	SIMULATOR ON-SITE	0		01NOV16	EACQ-1230*	
	EACQ-1250	PBMR REACTOR FUEL	1,218*	01MAR13	31OCT17	EACQ-1260*	EACQ-1290*
2 36 NHS	EACQ-1260	ACQUISITION STRATEGY DEVELOPMENT	131	01MAR13*	30AUG13		EACQ-1250*, EACQ-1270*
2 38 NHS	EACQ-1270	ORDER PBMR FUEL	0		30AUG13	EACQ-1260*	
2 38 NHS	EACQ-1280	MANUFACTURING	500	01SEP15*	31JUL17		EACQ-1290*
2 38 NHS	EACQ-1290	TRANSPORT TO SITE	66	01AUG17	31OCT17	EACQ-1000*, EACQ-1010*, EACQ-1030*,	EACQ-1300*
2 38 NHS	EACQ-1300	FUEL ONSITE	0		31OCT17	EACQ-1290*	
	EACQ-1370	REACTOR PRESSURE VESSEL	1,499*	01OCT09	30JUN15	EACQ-1380*	EACQ-1410*
2 36 NHS	EACQ-1380	ACQUISITION STRATEGY DEVELOPMENT	130	01OCT09*	31MAR10		EACQ-1000*, EACQ-1010*, EACQ-1030*,
2 38 NHS	EACQ-1390	ORDER MATERIAL	261	01APR10	31MAR11	EACQ-1380*	EACQ-1400*
2 38 NHS	EACQ-1400	MANUFACTURING	1,043	01APR11	31MAR15	EACQ-1390*	EACQ-1410*
2 38 NHS	EACQ-1410	TRANSPORT TO SITE	65	01APR15	30JUN15	EACQ-1370*, EACQ-1400*	EACQ-1420*
2 38 NHS	EACQ-1420	PRESSURE VESSEL ONSITE	0		30JUN15	EACQ-1410*	
	EACQ-1430	HELIUM PRESSURE BOUNDARY	868*	02DEC11	31MAR15	EACQ-1440*	EACQ-1490*
2 36 NHS	EACQ-1440	ACQUISITION STRATEGY DEVELOPMENT	130	02DEC11*	31MAY12		EACQ-1430*, EACQ-1450*
2 38 NHS	EACQ-1450	ORDER MATERIAL	261	01JUN12	31MAY13	EACQ-1440*	EACQ-1460*
2 38 NHS	EACQ-1460	MANUFACTURING	347	03JUN13	30SEP14	EACQ-1450*	EACQ-1470*
2 38 NHS	EACQ-1470	HOT GAS DUCT INTEGRATION	66	01OCT14	31DEC14	EACQ-1460*	EACQ-1480*
2 38 NHS	EACQ-1480	TRANSPORT TO SITE	64	01JAN15	31MAR15	EACQ-1470*	EACQ-1490*
2 38 NHS	EACQ-1490	PRESSURE BOUNDARY ONSITE	0		31MAR15	EACQ-1430*, EACQ-1480*	
	EACQ-1500	CORE BARREL ASSEMBLY (CBA)	1,109*	02APR12	30JUN16	EACQ-1510*	EACQ-1540*
2 36 NHS	EACQ-1510	ACQUISITION STRATEGY DEVELOPMENT	130	02APR12*	28SEP12		EACQ-1500*, EACQ-1520*
2 38 NHS	EACQ-1520	ORDER LLI FOR CORE BARREL ASSEMBLY	435	01OCT12	30MAY14	EACQ-1510*	EACQ-1530*
2 38 NHS	EACQ-1530	CBA MANUFACTURING	479	02JUN14	31MAR16	EACQ-1520*	EACQ-1540*
2 38 NHS	EACQ-1540	TRANSPORT TO SITE	65	01APR16	30JUN16	EACQ-1500*, EACQ-1530*	EACQ-1550*
2 38 NHS	EACQ-1550	CBA ONSITE	0		30JUN16	EACQ-1540*	
	EACQ-1560	CORE STRUCTURE CERAMICS (CSC) - GRAPHITE	1	01DEC11	01DEC11	EACQ-1570*	EACQ-1600
2 36 NHS	EACQ-1570	ACQUISITION STRATEGY DEVELOPMENT	131	01DEC11*	31MAY12		EACQ-1560*, EACQ-1580
2 38 NHS	EACQ-1580	ORDER COKE & FEEDSTOCK	435	01OCT12*	30MAY14	EACQ-1570	EACQ-1590*
2 38 NHS	EACQ-1590	CSC MANUFACTURING	479	02JUN14	31MAR16	EACQ-1580*	EACQ-1600*
2 38 NHS	EACQ-1600	TRANSPORT TO SITE	65	01APR16	30JUN16	EACQ-1560, EACQ-1590*	EACQ-1610*
2 38 NHS	EACQ-1610	CSC ONSITE	0		30JUN16	EACQ-1600*	
	EACQ-1620	INTERMEDIATE HEAT EXCHANGER (IHX)	1,239*	01JUL11	30MAR16	EACQ-1630*	EACQ-1660*
2 36 NHS	EACQ-1630	ACQUISITION STRATEGY DEVELOPMENT	131	01JUL11*	30DEC11		EACQ-1620*, EACQ-1640*
2 38 NHS	EACQ-1640	PLACE ORDER	261	02JAN12	31DEC12	EACQ-1630*	EACQ-1650*
2 38 NHS	EACQ-1650	MANUFACTURING	783	01JAN13	31DEC15	EACQ-1640*	EACQ-1660*
2 38 NHS	EACQ-1660	TRANSPORT TO SITE	64	01JAN16	30MAR16	EACQ-1620*, EACQ-1650*	EACQ-1670*
2 38 NHS	EACQ-1670	IHX ONSITE	0		30MAR16	EACQ-1660*	
	EACQ-1680	FUEL HANDLING & STORAGE SYSTEM (FHS)	457*	01MAY14	29JAN16	EACQ-1690*	EACQ-1700*
2 36 NHS	EACQ-1690	ACQUISITION STRATEGY DEVELOPMENT	66	01MAY14*	31JUL14		EACQ-1680*, EACQ-1700*
2 38 NHS	EACQ-1700	ORDER MATERIAL, MANUF, TRANSPORT	391	01AUG14	29JAN16	EACQ-1680*, EACQ-1690*	EACQ-1710*
2 38 NHS	EACQ-1710	FHS ONSITE	0		29JAN16	EACQ-1700*	
	EACQ-1720	HELIUM SERVICES SYSTEM (HSS)	978*	01AUG12	29APR16	EACQ-1730*	EACQ-1760*
2 36 NHS	EACQ-1730	ACQUISITION STRATEGY DEVELOPMENT	132	01AUG12*	31JAN13		EACQ-1720*, EACQ-1740*
2 38 NHS	EACQ-1740	ORDER MATERIAL	261	01FEB13	31JAN14	EACQ-1730*	EACQ-1750*
2 38 NHS	EACQ-1750	MANUFACTURING	520	03FEB14	29JAN16	EACQ-1740*	EACQ-1760*
2 38 NHS	EACQ-1760	TRANSPORT TO SITE	65	01FEB16	29APR16	EACQ-1720*, EACQ-1750*	EACQ-1770*
2 38 NHS	EACQ-1770	HSS ONSITE	0		29APR16	EACQ-1760*	
	EACQ-1780	CONSTRUCTION CONTRACTS	520*	03FEB14	29JAN16	EACQ-1790*	EACQ-1810*
	EACQ-1790	CIVIL	195	03FEB14*	31OCT14		CNST-1100*, EACQ-1780*
	EACQ-1800	PROCESS PIPING, EQUIPMENT, MECHANICAL	261	01OCT14*	30SEP15		CNST-1140*
	EACQ-1810	ELECTRICAL	196	01MAY15*	29JAN16	EACQ-1780*	CNST-1220*
	EACQ-1820	INSTRUMENTATION & CONTROL	196	30APR15*	28JAN16		CNST-1250*
	EACQ-1830	HYDROGEN PRODUCTION FACILITY	915*	01APR13	30SEP16	EACQ-1850*	EACQ-1860*
	EACQ-1840	DECOMPOSITION REACTOR & SYSTEM	915*	01APR13	30SEP16	EACQ-1850*	EACQ-1860*
2 36 HPS	EACQ-1850	ACQUSITION STRATEGY DEVELOPMENT	131	01APR13*	30SEP13		EACQ-1830*, EACQ-1840*, EACQ-1860*
2 38 HPS	EACQ-1860	ORDER MATERIAL, MANUF, TRANSPORT	784	01OCT13	30SEP16	EACQ-1830*, EACQ-1840*, EACQ-1850*	EACQ-1870*
2 38 HPS	EACQ-1870	DECOMPOSER ONSITE	0		30SEP16	EACQ-1860*	
	EACQ-1880	CONSTRUTION CONTRACTS HPF	327*	01OCT15	30DEC16	EACQ-1890*	EACQ-1910*
	EACQ-1890	BUILDINGS & BALANCE OF PLANT	131	01OCT15*	31MAR16		CNST-1285*, CNST-1290, EACQ-1880*
	EACQ-1900	PROCESS PIPING, EQUIPMENT, MECHANICAL	197	01JUL15*	31MAR16		CNST-1310*
	EACQ-1910	ELECTRICAL	131	01JUL16*	30DEC16	EACQ-1880*	CNST-1345*, CNST-1350
	EACQ-1920	INSTRUMENTATION & CONTROLS	131	30JUN16*	29DEC16		CNST-1355*, CNST-1360
	EACQ-1930	POWER CONVERSION FACILITY	848*	01JUL11	30SEP14	EACQ-1950*	EACQ-2010*
	EACQ-1940	AIR COOLED CONDENSER (ACC)	848*	01JUL11	30SEP14	EACQ-1950*	EACQ-1960*
2 36 PCS	EACQ-1950	ACQUISITION STRATEGY DEVELOPMENT	66	01JUL11*	30SEP11		EACQ-1930*, EACQ-1940*, EACQ-1960*
2 38 PCS	EACQ-1960	ORDER MATERIAL, MANUF, TRANSPORT	782	03OCT11	30SEP14	EACQ-1940*, EACQ-1950*	EACQ-1970*
2 38 PCS	EACQ-1970	ACC ONSITE	0		30SEP14	EACQ-1960*	

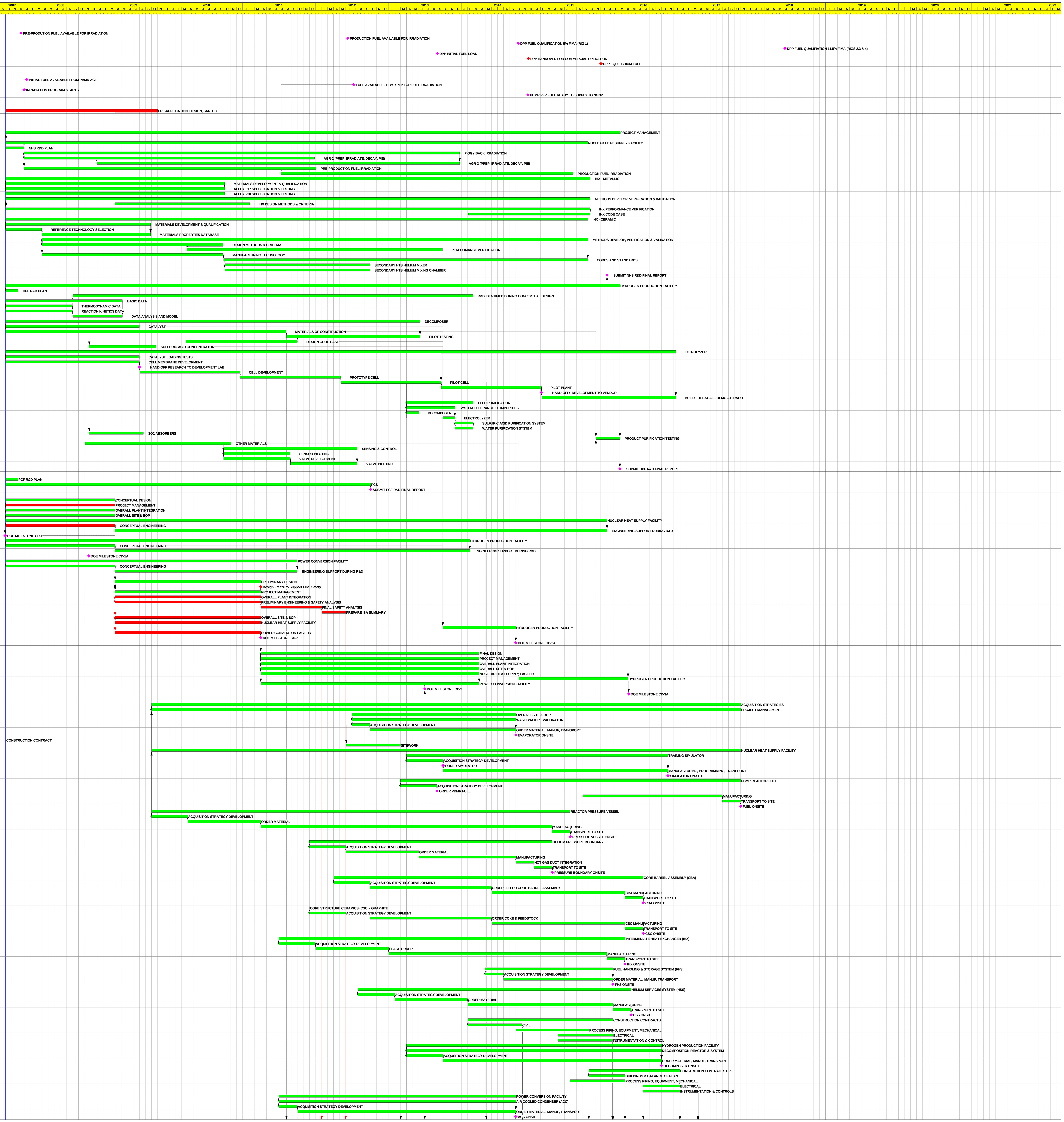

Start Date	01OCT07
Finish Date	29OCT21
Data Date	01OCT07
Run Date	18MAY07 14:19

Early Bar
Progress Bar
Critical Activity

NGNP

PRECONCEPTUAL NGNP SCHEDULE

Sheet 1 of 2

Date	Revision	Checked	Approved

© Primavera Systems, Inc.

WBS	Activity ID	Activity Description	Orig Dur	Early Start	Early Finish	Predecessors	Successors
	EACQ-1980	TURBO MACHINERY	913*	01APR11	30SEP14	EACQ-1990*	EACQ-2000*
2 36 PCS	EACQ-1990	ACQUISITION STRATEGY DEVELOPMENT	65	01APR11*	30JUN11		EACQ-1980*, EACQ-2000*
2 38 PCS	EACQ-2000	ORDER MATERIAL, MANUF, TRANSPORT	848	01JUL11	30SEP14	EACQ-1980*, EACQ-1990*	EACQ-2010*
2 38 PCS	EACQ-2010	TURBO MACHINERY ONSITE	0		30SEP14	EACQ-1930*, EACQ-2000*	
	EACQ-2020	STEAM GENERATOR (SG)	1,317*	16MAY11	31MAY16	EACQ-2030*	EACQ-2040*
2 36 PCS	EACQ-2030	ACQUISITION STRATEGY DEVELOPMENT	66	16MAY11*	15AUG11		EACQ-2020*, EACQ-2040*
2 38 PCS	EACQ-2040	ORDER MATERIAL, MANUF, TRANSPORT	1,251	16AUG11	31MAY16	EACQ-2020*, EACQ-2030*	EACQ-2050*
2 38 PCS	EACQ-2050	SG ONSITE	0		31MAY16	EACQ-2040*	
	EACQ-2060	FEED WATER HEATERS	717*	02JAN12	30SEP14	EACQ-2070*	EACQ-2080*
2 36 PCS	EACQ-2070	ACQUISITION STRATEGY DEVELOPMENT	65	02JAN12*	30MAR12		EACQ-2060*, EACQ-2080*
2 38 PCS	EACQ-2080	ORDER MATERIAL, MANUF, TRANSPORT	652	02APR12	30SEP14	EACQ-2060*, EACQ-2070*	EACQ-2090*
2 38 PCS	EACQ-2090	FEED WATER HEATERS ONSITE	0		30SEP14	EACQ-2080*	
	EACQ-2100	CONSENSATE/FEEDWATER PUMPS	848*	01JUL11	30SEP14	EACQ-2110*	EACQ-2120*
2 36 PCS	EACQ-2110	ACQUISITION STRATEGY DEVELOPMENT	66	01JUL11*	30SEP11		EACQ-2100*, EACQ-2120*
2 38 PCS	EACQ-2120	ORDER MATERIAL, MANUF, TRANSPORT	782	03OCT11	30SEP14	EACQ-2100*, EACQ-2110*	EACQ-2130*
2 38 PCS	EACQ-2130	CONDENSATE/FEEDWATER PUMPS ONSITE	0		30SEP14	EACQ-2120*	
	EACQ-2140	DEAERATOR	717*	02JAN12	30SEP14	EACQ-2150*	EACQ-2160*
2 36 PCS	EACQ-2150	ACQUISITION STRATEGY DEVELOPMENT	65	02JAN12*	30MAR12		EACQ-2140*, EACQ-2160*
2 38 PCS	EACQ-2160	ORDER MATERIAL, MANUF, TRANSPORT	652	02APR12	30SEP14	EACQ-2140*, EACQ-2150*	EACQ-2170*
2 38 PCS	EACQ-2170	DEAERATOR ONSITE	0		30SEP14	EACQ-2160*	
2 41 000 - LICENSING & PERMITTING TO CONSTRUCT							
2 41 PM2	ELIC-1010	PROJECT MANAGEMENT	2,480*	01OCT07	31MAR17	ELIC-1020*	ELIC-1420*
2 41 NRC	ELIC-1020	NRC LICENSING/STATE LOCAL PERMITS	2,480*	01OCT07	31MAR17	ELIC-1022*	ELIC-1010*, ELIC-1420*
	ELIC-1022	REGULATORY MANAGEMENT PLAN PREPARATION/ISSUE	328	01OCT07	31DEC08		ELIC-1020*
	ELIC-1025	PREAPPLICATION INTERACTIONS WITH NRC	1,110	01OCT07	30DEC11		
	ELIC-1030	APPLICATIONS PREPARATION	957	01OCT07	31MAY11		
	ELIC-1040	NGNP COL APPLICATION	1	01OCT07	01OCT07		
	ELIC-1050	PREPARATION COL APPLICATION	86	01FEB12	30MAY12	ENGD-1740*, ENGD-1750*	ELIC-1055*, ELIC-1250*
	ELIC-1055	SUBMIT COL APPLICATION	0		30MAY12	ELIC-1050*	ELIC-1250*
	ELIC-1060	NGNP EARLY SITE PERMIT/LWA APPLICATION	1,045*	01OCT07	30SEP11	ELIC-1080*	ELIC-1095*
	ELIC-1070	SITE GEOTECHNICAL INVESTIGATION	522	01JUL08	30JUN10	ELIC-1080*	ELIC-1090*
	ELIC-1080	ENVIRONMENTAL ANALYSIS	653	01OCT07	31MAR10		ELIC-1060*, ELIC-1070*, ELIC-1090
	ELIC-1090	APPLICATION PREPARATION	327	01JUL10	30SEP11	ELIC-1070*, ELIC-1080	ELIC-1095*
	ELIC-1095	SUBMIT ESP APPLICATION	0		30SEP11	ELIC-1060*, ELIC-1090*	ELIC-1110*
	ELIC-1100	NRC REVIEW	957*	03OCT11	02JUN15	ELIC-1110*	ELIC-1110, ELIC-1250*
	ELIC-1110	NRC REVIEW OF EARLY SITE PERMIT APPLICATION	455	03OCT11	28JUN13	ELIC-1095*, ELIC-1100	ELIC-1100*, ELIC-1130*
	ELIC-1120	SAFETY REVIEW	260*	03OCT11	28SEP12	ELIC-1130*	ELIC-1150*
	ELIC-1130	DOCKETING REVIEW	21	03OCT11	31OCT11	ELIC-1110*	ELIC-1120*, ELIC-1140*, ELIC-1170*
	ELIC-1140	STAFF REVIEW - DRAFT SER	109	01NOV11	30MAR12	ELIC-1130*	ELIC-1150*
	ELIC-1150	STAFF REVIEW - FINAL SER	130	02APR12	28SEP12	ELIC-1120*, ELIC-1140*	
	ELIC-1160	ENVIRONMENTAL REVIEW	260*	03OCT11	28SEP12	ELIC-1170*	ELIC-1190*
	ELIC-1170	NOTICE OF INTENT TO PREPARE EIS	21	03OCT11	31OCT11	ELIC-1130*	ELIC-1160*, ELIC-1180*
	ELIC-1180	DRAFT EIS	109	01NOV11	30MAR12	ELIC-1170*	ELIC-1190*
	ELIC-1190	FINAL EIS	130	02APR12	28SEP12	ELIC-1160*, ELIC-1180*	
	ELIC-1200	ACRS REVIEW	175	01MAR12*	31OCT12		ELIC-1210*
	ELIC-1210	ADMINISTRATIVE REVIEW	172	01NOV12	28JUN13	ELIC-1200*	ELIC-1220*
	ELIC-1220	RECEIPT OF ESP/LWA DECISION	0		28JUN13	ELIC-1210*	CNST-1020*, ENGD-1870*
	ELIC-1250	NRC REVIEW OF COL APPLICATION	784	31MAY12	02JUN15	ELIC-1050*, ELIC-1055*, ELIC-1100*	CNST-1110*, CNST-1120*, ELIC-1270*
	ELIC-1260	TECHNICAL REVIEW	542*	31MAY12	27JUN14	ELIC-1270*	ELIC-1355*
	ELIC-1270	DOCKETING REVIEW	21	31MAY12	28JUN12	ELIC-1250*	ELIC-1260*, ELIC-1280*
	ELIC-1280	NRC REVIEW, DEVELOPS RAIs	195	29JUN12	28MAR13	ELIC-1270*	ELIC-1290*, ELIC-1300*
	ELIC-1290	NRC ISSUES 1ST ROUND OF RAIs	0		28MAR13	ELIC-1280*	
	ELIC-1300	NGNP PROJECT RESPONSE PERIOD	45	29MAR13	30MAY13	ELIC-1280*	ELIC-1310*
	ELIC-1310	NRC ISSUES 2ND ROUND OF RAIs	86	31MAY13	27SEP13	ELIC-1300*	ELIC-1320*, ELIC-1360*
	ELIC-1320	NGNP PROJECT RESPONSE PERIOD	66	30SEP13	30DEC13	ELIC-1310*	ELIC-1330*, ELIC-1340*
	ELIC-1330	DRAFT SER ISSUED	0		30DEC13	ELIC-1320*	
	ELIC-1340	NGNP PROJECT REVIEW OF SER	64	31DEC13	28MAR14	ELIC-1320*	ELIC-1350*
	ELIC-1350	NRC PREPARES FINAL SER	65	31MAR14	27JUN14	ELIC-1340*	ELIC-1355*
	ELIC-1355	END OF TECHNICAL REVIEW	0		27JUN14	ELIC-1260*, ELIC-1350*	
	ELIC-1360	NGNP MEETINGS WITH NRC STAFF & ACRS	218	30SEP13	30JUL14	ELIC-1310*	ELIC-1370*
	ELIC-1370	ADMINISTRATIVE REVIEW, MANDATORY HEARING	216	31JUL14	28MAY15	ELIC-1360*	CLIC-1020*, ELIC-1375*
	ELIC-1375	END OF ADMINISTRATIVE REVIEW	0		28MAY15	ELIC-1370*	ELIC-1379*
	ELIC-1379	COL DECISION TO START CONSTRUCTION	0	29MAY15		ELIC-1375*	CNST-1110
2 41 SLE	ELIC-1380	STATE/LOCAL ENVIRONMENTAL PERMITS	1,696*	01OCT09	31MAR16	ELIC-1390*	ELIC-1475*
	ELIC-1390	NHSF, PCF & BALANCE OF PLANT	782*	01OCT09	28SEP12	ELIC-1400*	ELIC-1380*, ELIC-1410*
	ELIC-1400	PREPARE PERMITS	261	01OCT09*	30SEP10		ELIC-1390*, ELIC-1410*
	ELIC-1410	STATE/LOCAL AGENCY REVIEW	521	01OCT10	28SEP12	ELIC-1390*, ELIC-1400*	ELIC-1415*
	ELIC-1415	ENVIRONMENTAL PERMITS ISSUED	0		28SEP12	ELIC-1410*	
	ELIC-1420	PERMITS FOR OPERATION	587*	01JAN15	31MAR17	ELIC-1010*, ELIC-1020*, ELIC-1430*	ELIC-1440*
	ELIC-1430	PREPARE PERMITS FOR OPERATION	195	01JAN15*	30SEP15		ELIC-1420*, ELIC-1440*
	ELIC-1440	STATE/LOCAL AGENCY REVIEW FOR OPERATION	392	01OCT15	31MAR17	CNST-1380, ELIC-1420*, ELIC-1430*	
	ELIC-1450	HYDROGEN PRODUCTION FACILITY	392*	01OCT14	31MAR16	ELIC-1460*	ELIC-1470*
	ELIC-1460	PERMIT PREPARATION	66	01OCT14*	31DEC14		ELIC-1450*, ELIC-1470*
	ELIC-1470	STATE/LOCAL AGENCY REVIEW	326	01JAN15	31MAR16	ELIC-1450*, ELIC-1460*	ELIC-1475*
	ELIC-1475	HYDROGEN PLANT ENV. PERMITS ISSUED	0		31MAR16	ELIC-1380*, ELIC-1470*	CNST-1290
3 00 000 - CONSTRUCTION							
3 42 000 - LICENSE & PERMIT TO OPERATE							
3 42 PM2	CLIC-1000	PROJECT MANAGEMENT	871*	29MAY15	28SEP18	CLIC-1020*	CLIC-1020*
3 42 NHS	CLIC-1010	NUCLEAR HEAT SUPPLY FACILITY	1	01OCT07	01OCT07		
	CLIC-1020	NRC INSPECTION DURING CONSTRUCTION	871	29MAY15	28SEP18	CLIC-1000*, ELIC-1370*	CLIC-1000*
3 52 000 - CONSTRUCTION							
3 52 PM2	CNST-1000	PROJECT MANAGMENT	1,044*	29SEP14	27SEP18	CNST-1030*	IOPR-1220*
	CNST-1001	OWNER'S STARTUP COSTS	717	01JAN15*	29SEP17		
	CNST-1002	OVERALL SITE & BOP	1,110*	01JUL13	29SEP17	CNST-1020*	CNST-1080*
	CNST-1004	NHSF	803*	03NOV14	29NOV17	CNST-1100*	CNST-1230*
	CNST-1006	HPF	391*	01JUL16	29DEC17	CNST-1290*	CNST-1350*
	CNST-1008	PCS	611*	29MAY15	29SEP17	CNST-1390*	CNST-1460*
OVERALL SITE & BOP							
3 52 BOP	CNST-1010	OVERALL SITE & BOP	1,195*	04MAR13	29SEP17	CNST-1015*	CNST-1080*
	CNST-1015	MOBILIZE SITEWORK CONTRACTOR	65	04MAR13	31MAY13	EACQ-1028*	CNST-1010*, CNST-1020
	CNST-1020	SITE PREPARATION & FOUNDATIONS	325	01JUL13	26SEP14	CNST-1015, EACQ-1028, ELIC-1220*	CNST-1002*, CNST-1030*
	CNST-1030	BUILDINGS & BALANCE OF PLANT	436	29SEP14	30MAY16	CNST-1020*	CNST-1000*, CNST-1040, CNST-1050*, CNST-1060*,
	CNST-1040	PROCESS PIPING, EQUIPMENT INSTALLATION, MECH.	435*	31MAY16	29JAN18	CNST-1030, CNST-1050*	CNST-1060*, CNST-1080
	CNST-1050	AUXILIARIES	435	31MAY16	29JAN18	CNST-1030*, CNST-1140	CNST-1040*
	CNST-1060	PIPELINES & INTERCONNECTIONS	435	31MAY16	29JAN18	CNST-1030*, CNST-1040*, CNST-1140	
	CNST-1070	SUBSTATION & POWER DISTRIBUTION	391	31MAY16	28NOV17	CNST-1030*, CNST-1140	
	CNST-1080	INSTRUMENTATION & CONTROLS	391	01APR16	29SEP17	CNST-1002*, CNST-1010*, CNST-1040, CNST-1140*	IOPR-1030*
NUCLEAR HEAT SUPPLY FACILITY							
3 52 NHS	CNST-1090	NUCLEAR HEAT SUPPLY FACILITY	824*	03JUN15	30JUL18	CNST-1110*	CNST-1270*
	CNST-1100	CIVIL MOBILIZATION	150	03NOV14	29MAY15	EACQ-1790*	CNST-1004*, CNST-1110, CNST-1120
	CNST-1110	CIVILS	283	03JUN15	01JUL16	CNST-1100, ELIC-1250*, ELIC-1379	CNST-1090*
	CNST-1120	CONSTRUCTION BUILDING & FACILITIES	651	03JUN15	29NOV17	CNST-1100, ELIC-1250*	IOPR-1050*
	CNST-1130	PROCESS PIPING, EQUIPMENT INSTALLATION, MECH	566*	01OCT15	30NOV17	CNST-1140*	CNST-1200*
	CNST-1140	MOBILIZE MECH	131	01OCT15	31MAR16	EACQ-1800*	CNST-1050, CNST-1060, CNST-1070, CNST-1080*,
	CNST-1150	AUXILIARIES	435	01APR16	30NOV17	CNST-1140*	
	CNST-1160	REACTOR SYSTEMS	435	01APR16	30NOV17	CNST-1140*	
	CNST-1170	MAIN SUPPORT SYSTEMS	435	01APR16	30NOV17	CNST-1140*	
	CNST-1180	SPECIAL TOOLS & EHS	435	01APR16	30NOV17	CNST-1140*	
	CNST-1190	IHX & SECONDARY HELIUM LOOP	435	01APR16	30NOV17	CNST-1140*	
	CNST-1200	INITIAL FILLS, SPARES & CONSUMABLES	435	01APR16	30NOV17	CNST-1130*, CNST-1140*	
	CNST-1220	MOBILIZE ELECTRICAL	66	01FEB16	02MAY16	EACQ-1810*	CNST-1230*
	CNST-1230	ELECTRICAL	412	03MAY16	29NOV17	CNST-1004*, CNST-1220*	
	CNST-1250	MOBILIZE I&C	66	29JAN16	29APR16	EACQ-1820*	CNST-1260*
	CNST-1260	INSTRUMENTATION & CONTROLS	412	02MAY16	28NOV17	CNST-1250*	CNST-1270*, IOPR-1050
	CNST-1270	DEMOBILIZATION	174	29NOV17	30JUL18	CNST-1090*, CNST-1260*	
HYDROGEN PRODUCTION FACILITY							
3 52 HPF	CNST-1280	HYDROGEN PRODUCTION FACILITY	525*	01JUL16	05JUL18	CNST-1290*	CNST-1370*
	CNST-1285	MOBILIZE CIVIL	65	01APR16	30JUN16	EACQ-1890*	CNST-1290*
	CNST-1290	BUILDINGS & BALANCE OF PLANT	391	01JUL16	29DEC17	CNST-1285*, EACQ-1890, ELIC-1475	CNST-1006*, CNST-1280*
	CNST-1300	PROCESS PIPING, EQUIPMENT INSTALLATION, MECH.	456*	01APR16	29DEC17	CNST-1310*	CNST-1330*
	CNST-1310	MOBILIZE MECH.	131	01APR16	30SEP16	EACQ-1900*	CNST-1300*, CNST-1320*, CNST-1330*
	CNST-1320	DECOMPOSITION REACTOR & SYSTEM	325	03OCT16	29DEC17	CNST-1310*	
	CNST-1330	ELECTROLYSIS SYSTEM	325	03OCT16	29DEC17	CNST-1300*, CNST-1310*	CNST-1340*
	CNST-1340	INITIAL FILLS, SPARES & CONSUMABLES	65	02OCT17	29DEC17	CNST-1330*	
	CNST-1345	MOBILIZE ELECTRICAL	65	02JAN17	31MAR17	EACQ-1910*	CNST-1350*
	CNST-1350	ELECTRICAL	195	03APR17	29DEC17	CNST-1006*, CNST-1345*, EACQ-1910	
	CNST-1355	MOBILIZE I&C	65	30DEC16	30MAR17	EACQ-1920*	CNST-1360*
	CNST-1360	INSTRUMENTATION & CONTROLS	195	31MAR17	28DEC17	CNST-1355*, EACQ-1920	CNST-1370*, IOPR-1080*
	CNST-1370	DEMOBILIZATION	175	03NOV17	05JUL18	CNST-1280*, CNST-1360*	
POWER CONVERSION FACILITY							
3 52 PCF	CNST-1380	POWER CONVERSION FACILITY	611*	29MAY15	29SEP17	CNST-1390*	CNST-1480*, ELIC-1440
	CNST-1390	SITE DEVELOPMENT	132	29MAY15*	30NOV15		CNST-1008*, CNST-1380*, CNST-1400*
	CNST-1400	BUILDINGS & STRUCTURES	392	01DEC15	31MAY17	CNST-1390*	
	CNST-1410	PROCESS PIPING, EQUIPMENT INSTALLATION, MECH.	455*	01JAN16	28SEP17	CNST-1420*	CNST-1450*
	CNST-1420	STEAM GENERATOR	435	01JAN16*	31AUG17		CNST-1410*, CNST-1430*, CNST-1440*,
	CNST-1430	STEAM GENERATOR VENDOR PACKAGE	435	01JAN16	31AUG17	CNST-1420*	
	CNST-1440	BALANCE OF PLANT	435	01JAN16	31AUG17	CNST-1420*	
	CNST-1450	COOLING SYSTEM	435	29JAN16	28SEP17	CNST-1410*, CNST-1420*	
	CNST-1460	ELECTRICAL	391	01APR16	29SEP17	CNST-1008*, CNST-1420*	CNST-1470*
	CNST-1470	INSTRUMENTATION & CONTROLS	391	01APR16	29SEP17	CNST-1460*	CNST-1480*, IOPR-1100*
	CNST-1480	INTIAL FILLS, SPARES & CONSUMABLES	65	03JUL17	29SEP17	CNST-1380*, CNST-1470*	
3 54 000 - MOCKUP & TESTING							
3 54 000	CTST-1000	MOCKUP & TESTING	1,109*	08AUG11	05NOV15	CTST-1030*	CTST-1040*
3 54 PM2	CTST-1010	PROJECT MANAGEMENT	1	01OCT07	01OCT07		
3 54 HPF	CTST-1020	HYDROGEN PRODUCTION FACILITY	1,631*	08AUG11	06NOV17	CTST-1030*	CTST-1060*
	CTST-1030	DECOMPOSER PILOT TESTING	521	08AUG11*	05AUG13	ENGD-1340*	CTST-1000*, CTST-1020*, CTST-1040*, ENGD-1510
	CTST-1040	ELECTROLYZER PILOT TESTING	392	07MAY14	05NOV15	CTST-1000*, CTST-1030*, ENGD-1430	CTST-1050*, CTST-1060*, ENGD-1510*
	CTST-1050	HAND-OFF DEVELOPMENT TO VENDOR	0		05NOV15	CTST-1040*	
	CTST-1060	ELECTROLYZER FULL SCALE DEMONSTRATION AT NGNP	522	06NOV15	06NOV17	CTST-1020*, CTST-1040*	CTRN-1050*
3 66 000 - TRAINING							
3 66 000	CTRN-1000	TRAINING	1	01OCT07	01OCT07		
3 66 PM2	CTRN-1010	PROJECT MANAGEMENT	1	01OCT07	01OCT07		
3 66 NHS	CTRN-1020	NUCLEAR HEAT SUPPLY FACILITY	782*	03FEB14	31JAN17	CTRN-1030*	CTRN-1040*
	CTRN-1030	NRC OPERATOR CERTIFICATION TRAINING	782	03FEB14*	31JAN17		CTRN-1020*, CTRN-1040*
	CTRN-1040	OPERATORS PASS LICENSE TEST	0		31JAN17	CTRN-1020*, CTRN-1030*	
3 66 HPF	CTRN-1050	HYDROGEN PRODUCTION FACILITY	130	07NOV17	07MAY18	CTST-1060*	
4 00 000 - INITIAL OPERATIONS & INSPECTION							
4 72 000 - PRE-COMMISSIONING (COLD START-UP)							
4 72 PM2	IOPR-1010	PROJECT MANAGEMENT	1	01OCT07	01OCT07		
4 72 BOP	IOPR-1020	OVERALL SITE & BOP	130*	10NOV16	10MAY17	IOPR-1030*	IOPR-1030*
	IOPR-1030	PRE-COMMISSIONING	130	10NOV16	10MAY17	CNST-1080*, IOPR-1020*	IOPR-1020*, IOPR-1140*
4 72 NHS	IOPR-1040	NUCLEAR HEAT SUPPLY FACILITY	414*	02MAY16	30NOV17	IOPR-1050*	IOPR-1060*
	IOPR-1050	PRE-OPERATIONAL TESTING	414	02MAY16	30NOV17	CNST-1120*, CNST-1260	IOPR-1040*, IOPR-1060*
	IOPR-1060	PLANT READY FOR FUEL LOADING	0		30NOV17	IOPR-1040*, IOPR-1050*	IOPR-1160*
4 72 HPF	IOPR-1070	HYDROGEN PRODUCTION FACILITY	130*	30JUN17	28DEC17	IOPR-1080*	IOPR-1080*
	IOPR-1080	PRE-COMMISSIONING	130	30JUN17	28DEC17	CNST-1360*, IOPR-1070*	IOPR-1070*, IOPR-1220*
4 72 PCF	IOPR-1090	POWER CONVERSION FACILITY	130*	03APR17	29SEP17	IOPR-1100*	IOPR-1100*
	IOPR-1100	PRE-COMMISSIONING	130	03APR17	29SEP17	CNST-1470*, IOPR-1090*	IOPR-1090*, IOPR-1240*
4 73 000 -COMMISSIONING & STARTUP (HOT START-UP)							
4 73 PM2	IOPR-1120	PROJECT MANAGEMENT	1	01OCT07	01OCT07		
4 73 BOP	IOPR-1130	OVERALL SITE & BOP	195*	11MAY17	07FEB18	IOPR-1140*	IOPR-1140*
	IOPR-1140	STARTUP & TESTING	195	11MAY17	07FEB18	IOPR-1030*, IOPR-1130*	IOPR-1130*
4 73 NHS	IOPR-1150	NUCLEAR HEAT SUPPLY FACILITY	216*	01DEC17	28SEP18	IOPR-1160*	IOPR-1200*
	IOPR-1160	INITIAL FUEL LOAD TO LOWER POWER TESTING	64	01DEC17	28FEB18	IOPR-1060*	IOPR-1150*, IOPR-1170*
	IOPR-1170	1ST SYNC TO GRID	22	01MAR18	30MAR18	IOPR-1160*	IOPR-1180*
	IOPR-1180	POWER ASCENSION TESTING	65	02APR18	29JUN18	IOPR-1170*	IOPR-1190*
	IOPR-1190	MAINTENANCE OUTAGE	22	02JUL18	31JUL18	IOPR-1180*	IOPR-1200*
	IOPR-1200	PLANT ACCEPTANCE TESTING	43	01AUG18	28SEP18	IOPR-1150*, IOPR-1190*	OPRC-1010*
4 73 HPF	IOPR-1210	HYDROGEN PRODUCTION FACILITY	195*	29DEC17	27SEP18	IOPR-1220*	IOPR-1220*
	IOPR-1220	STARTUP & TESTING	195	29DEC17	27SEP18	CNST-1000*, IOPR-1080*, IOPR-1210*	IOPR-1210*, IOPR-1250*
4 73 PCF	IOPR-1230	POWER CONVERSION FACILITY	195*	02OCT17	29JUN18	IOPR-1240*	IOPR-1240*
	IOPR-1240	STARTUP & TESTING	195	02OCT17	29JUN18	IOPR-1100*, IOPR-1230*	IOPR-1230*
	IOPR-1250	DOE MILESTONE CD-4: APPROVAL FOR COMM. OPER.	0		27SEP18	IOPR-1220*	OPRC-1010, OPRC-1020*, OPRC-1030*,
5 00 000 - OPERATE COMMERCIALLY							
5 74 000 - OPERATE PLANT							
5 74 PM2	OPRC-1010	PROJECT MANAGEMENT	784	01OCT18	30SEP21	IOPR-1200*, IOPR-1250	OPRC-2010*
5 74 BOP	OPRC-1020	OVERALL SITE & BOP	784	28SEP18	29SEP21	IOPR-1250*	OPRC-2020*
5 74 NHS	OPRC-1030	NUCLEAR HEAT SUPPLY FACILITY	784	28SEP18	29SEP21	IOPR-1250*	OPRC-2030*
5 74 HPF	OPRC-1040	HYDROGEN PRODCUTION FACILITY	784	28SEP18	29SEP21	IOPR-1250*	OPRC-2040*
5 74 PCF	OPRC-1050	POWER CONVERSION FACILITY	784	28SEP18	29SEP21	IOPR-1250*	OPRC-2050*
5 76 000 - SHUTDOWN & INSPECTIONS							
5 76 PM2	OPRC-2010	PROJECT MANAGEMENT	0	01OCT21		OPRC-1010*	OPRC-3010*
5 76 BOP	OPRC-2020	OVERALL SITE & BOP	0	30SEP21		OPRC-1020*	OPRC-3020*
5 76 NHS	OPRC-2030	NUCLEAR HEAT SUPPLY FACILITY	0	30SEP21		OPRC-1030*	OPRC-3030*
5 76 HPF	OPRC-2040	HYDROGEN PRODUCTION FACILITY	0	30SEP21		OPRC-1040*	OPRC-3040*
5 76 PCF	OPRC-2050	POWER CONVERSION FACILITY	0	30SEP21		OPRC-1050*	OPRC-3050*
5 75 000 - MAINTAIN PLANT							
5 75 PM2	OPRC-3010	PROJECT MANAGEMENT	21	01OCT21	29OCT21	OPRC-2010*	
5 75 BOP	OPRC-3020	OVERALL SITE & BOP	21	30SEP21	28OCT21	OPRC-2020*	
5 75 NHS	OPRC-3030	NUCLEAR HEAT SUPPLY FACILITY	21	30SEP21	28OCT21	OPRC-2030*	
5 75 HPF	OPRC-3040	HYDROGEN PRODUCTION FACILITY	21	30SEP21	28OCT21	OPRC-2040*	
5 75 PCF	OPRC-3050	POWER CONVERSION FACILITY	21	30SEP21	28OCT21	OPRC-2050*	

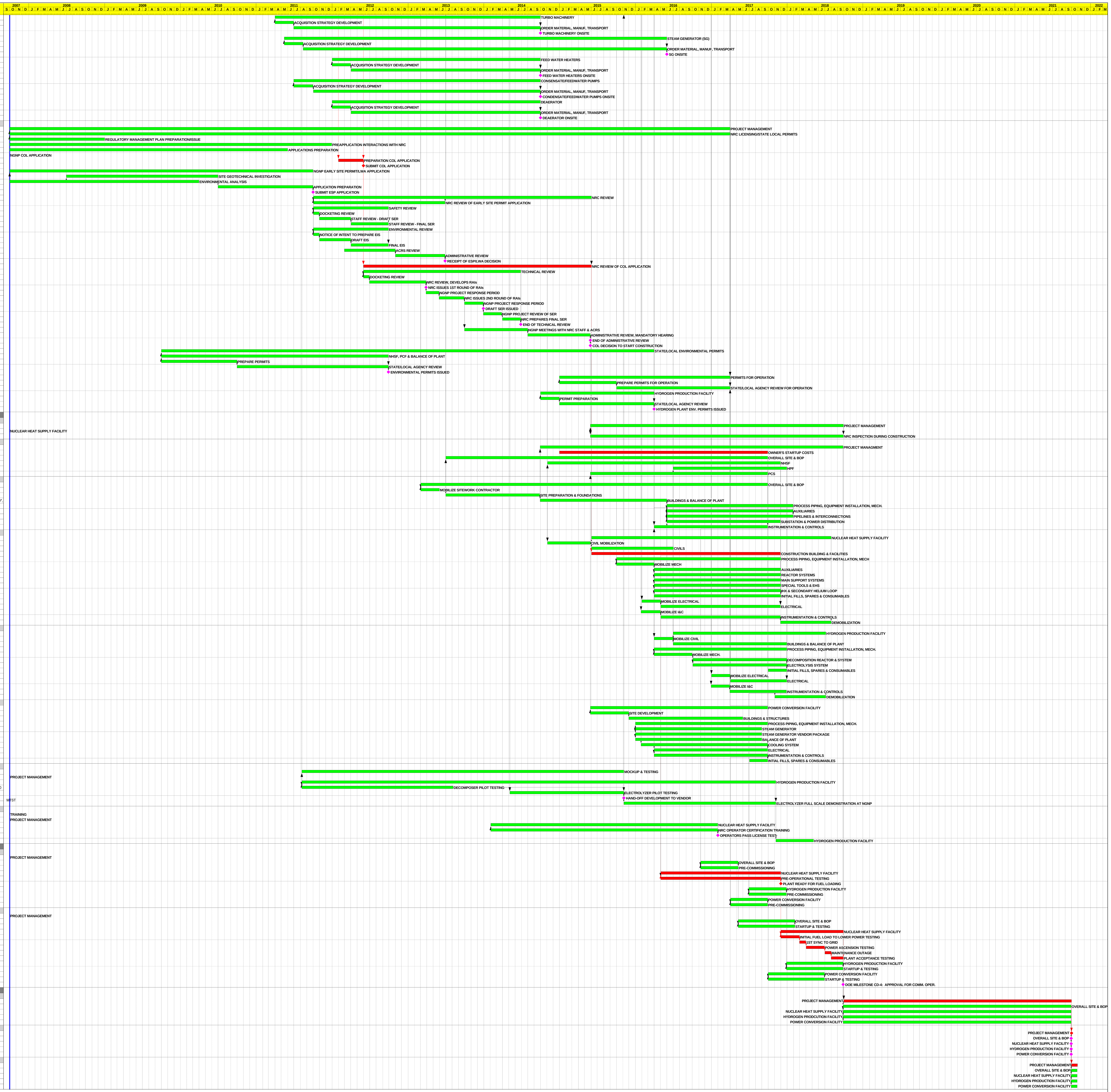

Start Date 01OCT07
Finish Date 29OCT21
Data Date 01OCT07
Run Date 18MAY07 14:19

Early Bar
Progress Bar
Critical Activity

NGNP

PRECONCEPTUAL NGNP SCHEDULE

Sheet 2 of 2

Date	Revision	Checked	Approved

© Primavera Systems, Inc.

WBS	Activity ID	Activity Description	Orig Dur	Early Start	Early Finish	Predecessors	Successors
REFERENCE BASELINES							
	RB-1000	PRE-PRODUCTION FUEL AVAILABLE FROM PBMR ACF	0		15JAN08*		ED-NHS-103, ED-NHS-115
	RB-2000	PRODUCTION FUEL AVAILABLE	0		11JUL12*		ED-NHS-11B*, ED-NHS-11C*
PROGRAMMATIC ACTIVITIES							
CONCEPTUAL DESIGN FUTURE STUDIES							
	PA-CD-100	PREP & ISSUE STUDY C.8 COLA PRE-APP. STRATEGY	89	01OCT07	31JAN08		PA-LP-120*
PREPARE OR REVIEW THE CONCEPTUAL DESIGN PLAN							
	PA-CD-110	PREPARE SCOPE	23	02FEB09	04MAR09	PA-SS-100*	
	PA-CD-120	SCHEDULE DEVELOPMENT	45	02FEB09	03APR09	PA-SS-100*	PA-CD-130*
	PA-CD-130	BUDGET DEVELOPMENT	45	02FEB09	03APR09	PA-CD-120*	PA-CD-140*
	PA-CD-140	BEA APPROVAL OF THE PLAN	21	06APR09	04MAY09	PA-CD-130*	
35% DESIGN REVIEW INCLUDING VALUE ENGINEERING							
	PA-35-100	35% DESIGN REVIEW INCLUDING VALUE ENGINEERING	44*	31MAR08	29MAY08	PA-35-110*	PA-35-130*
	PA-35-110	SUBMIT PACKAGE TO BEA	0	31MAR08*			PA-35-100*, PA-35-112*, PA-35-115*, PA-35-117*
	PA-35-112	FUTURE STUDIES	1	31MAR08	31MAR08	PA-35-110*	
	PA-35-115	TL USER REQUIREMENTS	1	31MAR08	31MAR08	PA-35-110*	
	PA-35-117	PD&I OUTPUT	1	31MAR08	31MAR08	PA-35-110*	
	PA-35-120	REVIEW MEETING	0	15APR08*			PA-35-130*
	PA-35-130	INCORPORATE COMMENTS	33	15APR08	29MAY08	PA-35-100*, PA-35-120*	
90% DESIGN REVIEW INCLUDING VALUE ENGINEERING							
	PA-90-100	90% DESIGN REVIEW INCLUDING VALUE ENGINEERING	42*	30JAN09	30MAR09	PA-90-110*	PA-90-130*
	PA-90-110	SUBMIT PACKAGE TO BEA	0	30JAN09*			PA-90-100*, PA-90-110A*, PA-90-110B*, PA-90-110C*,
	PA-90-110A	ADDITIONAL STUDIES	1	30JAN09	30JAN09	PA-90-110*	
	PA-90-110B	TL PLANT REQUIREMENTS	1	30JAN09	30JAN09	PA-90-110*	
	PA-90-110C	PD&I OUTPUT	1	30JAN09	30JAN09	PA-90-110*	
	PA-90-110D	MAJOR SDDs INCLUDING P&IDS	1	30JAN09	30JAN09	PA-90-110*	
	PA-90-110E	PRELIMINARY INTEGRATED SAFETY ASSESSMENT	1	30JAN09	30JAN09	PA-90-110*	
	PA-90-110F	R&D PLAN UPDATE	1	30JAN09	30JAN09	PA-90-110*	
	PA-90-110G	REGULATORY MANAGEMENT PLAN UPDATE	1	30JAN09	30JAN09	PA-90-110*	
	PA-90-110H	NGNP SCHEDULE UPDATE	1	30JAN09	30JAN09	PA-90-110*	
	PA-90-110I	BUDGET COST ESTIMATE	1	30JAN09	30JAN09	PA-90-110*	
	PA-90-110J	PMP UPDATE	1	30JAN09	30JAN09	PA-90-110*	
	PA-90-110K	PLAN FOR PRELIMINARY DESIGN	1	30JAN09	30JAN09	PA-90-110*	
	PA-90-110L	CONSTRUCTABILITY REVIEW REPORT	1	30JAN09	30JAN09	PA-90-110*	
	PA-90-120	REVIEW MEETING	0	27FEB09*			PA-90-130*
	PA-90-130	INCORPORATE COMMENTS	22	27FEB09	30MAR09	PA-90-100*, PA-90-120*	
PLANS & PROCEDURES							
	PA-PP-100	PROJECT MANAGEMENT PLAN	89*	02FEB09	04JUN09	PA-PP-110*	PA-PP-150*
	PA-PP-110	PREPARATION	45	02FEB09	03APR09	PA-SS-100*	PA-PP-100*, PA-PP-120*
	PA-PP-120	ISSUE DRAFT	0		03APR09	PA-PP-110*	PA-PP-130*
	PA-PP-130	BEA REVIEW	21	06APR09	04MAY09	PA-PP-120*	PA-PP-140*
	PA-PP-140	INCORPORATE COMMENTS	23	05MAY09	04JUN09	PA-PP-130*	PA-PP-150*
	PA-PP-150	ISSUE FINAL	0		04JUN09	PA-PP-100*, PA-PP-140*	
	PA-PP-160	QUALITY ASSURANCE PLAN	89*	02FEB09	04JUN09	PA-PP-170*	PA-PP-210*
	PA-PP-170	PREPARATION	45	02FEB09	03APR09	PA-SS-100*	PA-PP-160*, PA-PP-180*
	PA-PP-180	ISSUE DRAFT	0		03APR09	PA-PP-170*	PA-PP-190*
	PA-PP-190	BEA REVIEW	21	06APR09	04MAY09	PA-PP-180*	PA-PP-200*
	PA-PP-200	INCORPORATE COMMENTS	23	05MAY09	04JUN09	PA-PP-190*	PA-PP-210*
	PA-PP-210	ISSUE FINAL	0		04JUN09	PA-PP-160*, PA-PP-200*	
	PA-PP-220	ENGINEERING PROCEDURES	66*	02FEB09	04MAY09	PA-PP-230*	PA-PP-240*
	PA-PP-230	PREPARE DOCUMENTS	66	02FEB09	04MAY09	PA-SS-100*	PA-PP-220*, PA-PP-240*
	PA-PP-240	ISSUE DOCUMENTS	0		04MAY09	PA-PP-220*, PA-PP-230*	
	PA-PP-250	REGULATORY MANAGEMENT PLAN	328*	01OCT07	31DEC08	PA-PP-260*	PA-PP-300*
	PA-PP-260	PREPARATION & PLANNING	196*	01OCT07	30JUN08	PA-PP-260A*	PA-PP-250*, PA-PP-260B*
	PA-PP-260A	Plan schedule and LRB contents with DOE	89	01OCT07	31JAN08		PA-PP-260*, PA-PP-260B*, PA-PP-265A*
	PA-PP-260B	Establish schedule and LRB contents with NRC	107	01FEB08	30JUN08	PA-PP-260*, PA-PP-260A*	
	PA-PP-265	Outline LRB Document	217*	03DEC07	30SEP08	PA-PP-265A*	PA-PP-265E*
	PA-PP-265A	Administrative Issues	195	03DEC07	29AUG08	PA-PP-260A*	PA-PP-265*, PA-PP-265B*, PA-PP-265C*,
	PA-PP-265B	ESP and COL application contents	162	03DEC07	15JUL08	PA-PP-265A*	
	PA-PP-265C	PBMR topical and technical issue applicability	162	03DEC07	15JUL08	PA-PP-265A*	
	PA-PP-265D	NGNP-specific issues	131	01APR08	30SEP08	PA-PP-265A*	PA-PP-265E*, PA-PP-270A*
	PA-PP-265E	Establish NRC R&D needs	131	01APR08	30SEP08	PA-LP-150, PA-PP-265*, PA-PP-265D*	ED-TD-100
	PA-PP-268	Prepare Environmental Permitting Compliance Plan	66*	01NOV07	31JAN08	PA-PP-268A*	PA-PP-268D*
	PA-PP-268A	Revise Pre-conceptual Env. Permitting Plan	22	01NOV07*	30NOV07		PA-PP-268*, PA-PP-268C*
	PA-PP-268C	Document Environmental Compliance Basis	21	03DEC07	31DEC07	PA-PP-268A*	PA-PP-268D*
	PA-PP-268D	Draft State & Local permits section - COL Env.	23	01JAN08	31JAN08	PA-PP-268*, PA-PP-268C*	
	PA-PP-270	ISSUE DRAFT	131*	01APR08	30SEP08	PA-PP-270A*	PA-PP-270C*
	PA-PP-270A	Annotated outline	55	01APR08	16JUN08	PA-PP-265D*	PA-PP-270*, PA-PP-270B*
	PA-PP-270B	Draft for internal review	44	17JUN08	15AUG08	PA-PP-270A*	PA-PP-270C*
	PA-PP-270C	Final internal draft	32	18AUG08	30SEP08	PA-PP-270*, PA-PP-270B*	PA-PP-280*
	PA-PP-280	BEA REVIEW	23	01OCT08	31OCT08	PA-PP-270C*	PA-PP-290*
	PA-PP-290	INCORPORATE COMMENTS	20	03NOV08	28NOV08	PA-PP-280*	PA-PP-300*
	PA-PP-300	ISSUE FINAL	23	01DEC08	31DEC08	PA-PP-250*, PA-PP-290*	
	PA-PP-310	PROBABILITY RISK ASSESSMENT PLAN	66*	02FEB09	04MAY09	PA-PP-320*	PA-PP-330*
	PA-PP-320	PREPARE PLAN	66	02FEB09	04MAY09	PA-SS-100*	PA-PP-310*, PA-PP-330*
	PA-PP-330	ISSUE PLAN	0		04MAY09	PA-PP-310*, PA-PP-320*	
	PA-PP-340	SYSTEMS ENGINEERING PLAN	66*	02FEB09	04MAY09	PA-PP-350*	PA-PP-360*
	PA-PP-350	PREPARE PLAN	66	02FEB09	04MAY09	PA-SS-100*	PA-PP-340*, PA-PP-360*
	PA-PP-360	ISSUE PLAN	0		04MAY09	PA-PP-340*, PA-PP-350*	
	PA-PP-370	CAD/CAE PLAN	66*	02FEB09	04MAY09	PA-PP-380*	PA-PP-390*
	PA-PP-380	PREPARE PLAN	66	02FEB09	04MAY09	PA-SS-100*	PA-PP-370*, PA-PP-390*
	PA-PP-390	ISSUE PLAN	0		04MAY09	PA-PP-370*, PA-PP-380*	
SCHEDULE							
	PA-SS-100	PREPARE REVISED NGNP PROJECT SCHEDULE	42	02FEB09*	31MAR09		PA-CD-110*, PA-CD-120*, PA-PP-110*, PA-PP-170*,
	PA-SS-110	ISSUE REVISED SCHEDULE	0		31MAR09	PA-SS-100*	
2 41 000 LICENSING & PERMITTING TO CONSTRUCT							
2 41 NRC	PA-LP-100	NRC LICENSING	1	01OCT07	01OCT07		
	PA-LP-110	PREAPPLICATION INTERACTIONS WITH NRC	370	01OCT07	27FEB09		
	PA-LP-120	REGULATORY MANAGEMENT PLAN BRIEFING WITH NRC	0	01FEB08		PA-CD-100*	
	PA-LP-130	NGNP DESIGN FAMILIARIZATION BRIEFING WITH NRC	0	01APR08*			
	PA-LP-140	BRIEFING WITH NRC ON 500 MWth CAPABILITY	0	01JUL08*			
	PA-LP-150	BRIEFING WITH NRC ON REGULATORY TECHNOLOGY DEV.	0	01SEP08*			PA-PP-265E
	PA-LP-160	BRIEFING WITH NRC ON APPROACH TO HYDROGEN HAZARD	0	28NOV08*			
	PA-LP-170	BRIEFING WITH NRC ON APP. TO IHX ROLE	0	27FEB09*			
TECHNOLOGY DEVELOPMENT & ENGINEERING/DESIGN							
2 22 NHS NUCLEAR HEAT SUPPLY FACILITY							
	ED-NHS-100	PREPARE & ISSUE NHS R&D PLAN (EXC. FUEL & GRPHT)	66	01OCT07	31DEC07		ED-NHS-102*, ED-NHS-110, ED-NHS-112*,
	ED-NHS-101	PIGGY BACK IRRADIATION	1,560*	01JAN08	23DEC13	ED-NHS-102*	ED-NHS-109*
	ED-NHS-102	AGR-2 PREPARATION	260	01JAN08	29DEC08	ED-NHS-100*	ED-NHS-101*, ED-NHS-103*, ED-NHS-106*
	ED-NHS-103	AGR-2 IRRADIATION	520	30DEC08	27DEC10	ED-NHS-102*, RB-1000	ED-NHS-104*, ED-NHS-107*
	ED-NHS-104	AGR-2 DECAY	130	28DEC10	27JUN11	ED-NHS-103*	ED-NHS-105*
	ED-NHS-105	AGR-2 PIE	130	28JUN11	26DEC11	ED-NHS-104*	
	ED-NHS-106	AGR-3 PREPARATION	260	30DEC08	28DEC09	ED-NHS-102*	ED-NHS-107
	ED-NHS-107	AGR-3 IRRADIATION	520	28DEC10	24DEC12	ED-NHS-103*, ED-NHS-106	ED-NHS-108*
	ED-NHS-108	AGR-3 DECAY	130	25DEC12	24JUN13	ED-NHS-107*	ED-NHS-109*
	ED-NHS-109	AGR-3 PIE	130	25JUN13	23DEC13	ED-NHS-101*, ED-NHS-108*	
	ED-NHS-110	PRE - PRODUCTION FUEL IRRADIATION PROGRAM	1,045*	01JAN08	02JAN12	ED-NHS-100, ED-NHS-112*	ED-NHS-118*
	ED-NHS-112	IRRADIATION PLANNING AND PREPARATION	260	01JAN08	29DEC08	ED-NHS-100*	ED-NHS-110*, ED-NHS-115*
	ED-NHS-115	IRRADIATION	525	30DEC08	03JAN11	ED-NHS-112*, RB-1000	ED-NHS-116*
	ED-NHS-116	DECAY	130	04JAN11	04JUL11	ED-NHS-115*	ED-NHS-117*, ED-NHS-118
	ED-NHS-117	PIE AND ANALYSIS	130	05JUL11	02JAN12	ED-NHS-116*	ED-NHS-118*
	ED-NHS-118	HEATING TESTS, PIE, ANALYSIS	120	19JUL11	02JAN12	ED-NHS-110*, ED-NHS-116, ED-NHS-117*	
	ED-NHS-11A	PRODUCTION FUEL IRRADIATION	1,045*	13JUL11	14JUL15	ED-NHS-11B*	ED-NHS-11F*
	ED-NHS-11B	IRRADIATION PLANNING AND PREPARATION	260	13JUL11	10JUL12	RB-2000*	ED-NHS-11A*, ED-NHS-11C
	ED-NHS-11C	IRRADIATION	524	12JUL12	15JUL14	ED-NHS-11B, RB-2000*	ED-NHS-11D*
	ED-NHS-11D	DECAY	130	16JUL14	13JAN15	ED-NHS-11C*	ED-NHS-11E*, ED-NHS-11F
	ED-NHS-11E	PIE AND ANALYSIS	130	14JAN15	14JUL15	ED-NHS-11D*	ED-NHS-11F*
	ED-NHS-11F	HEATING TESTS, PIE, ANALYSIS	120	28JAN15	14JUL15	ED-NHS-11A*, ED-NHS-11D, ED-NHS-11E*	
	ED-NHS-120	INITIAL GRAPHITE IRRADIATION PROGRAM	915	01OCT07	01APR11	ED-NHS-100*	ED-NHS-121*
	ED-NHS-121	EXTENDED GRAPHITE IRRADIATION PROGRAM	1,307	28SEP09	30SEP14	ED-NHS-120*	
	ED-NHS-130	IHX - METALLIC	1,110*	01OCT07	30DEC11	ED-NHS-140*	ED-NHS-193*
	ED-NHS-140	MATERIALS DEVELOPMENT & QUALIFICATION	785*	01OCT07	01OCT10	ED-NHS-150*	ED-NHS-130*, ED-NHS-155*
	ED-NHS-150	ALLOY 617 SPECIFICATION & TESTING	785*	01OCT07	01OCT10	ED-NHS-151*	ED-NHS-140*, ED-NHS-155*
	ED-NHS-151	DEFINE REFERENCE ALLOY 617 SPECIFICATION	45	01OCT07	30NOV07	ED-NHS-100*	ED-NHS-150*, ED-NHS-152*
	ED-NHS-152	PROCURE 3 HEATS OF ALLOY 617 FOR TESTING	305	03DEC07	30JAN09	ED-NHS-151*	ED-NHS-153*, ED-NHS-154*
	ED-NHS-153	PERFORM TESTING FOR ALLOY 617 & ISSUE RESULTS	195	02FEB09	30OCT09	ED-NHS-152*	ED-NHS-155*
	ED-NHS-154	PERFORM WELDABILITY ASSESSMENT & ISSUE RESULTS	195	02FEB09	30OCT09	ED-NHS-152*	
	ED-NHS-155	AGING ASSESSMENT FOR ALLOY 617	350	01JUN09	01OCT10	ED-NHS-140*, ED-NHS-150*, ED-NHS-153*	ED-NHS-156*, ED-NHS-157*
	ED-NHS-156	ALLOY 617 ENV. EFFECTS ASSESSMENT	350	01JUN09	01OCT10	ED-NHS-155*	
	ED-NHS-157	GRAIN SIZE ASSESSMENT FOR ALLOY 617	130	01JUN09	27NOV09	ED-NHS-155*	
	ED-NHS-160	ALLOY 230 SPECIFICATION & TESTING	785*	01OCT07	01OCT10	ED-NHS-161*	ED-NHS-165*
	ED-NHS-161	DEFINE REFERNECE ALLOY 230 SPECIFICATIONS	45	01OCT07	30NOV07	ED-NHS-100*	ED-NHS-160*, ED-NHS-162*
	ED-NHS-162	PROCURE 3 HEATS OF ALLOY 230 FOR TESTING	305	03DEC07	30JAN09	ED-NHS-161*	ED-NHS-163*, ED-NHS-164*
	ED-NHS-163	PERFORM TESTING FOR ALLOY 230 & ISSUE RESULTS	195	02FEB09	30OCT09	ED-NHS-162*	ED-NHS-165*
	ED-NHS-164	PERFORM WELDABILITY ASSESSMENT & ISSUE RESULTS	195	02FEB09	30OCT09	ED-NHS-162*	
	ED-NHS-165	AGING ASSESSMENT FOR ALLOY 230	350	01JUN09	01OCT10	ED-NHS-160*, ED-NHS-163*	ED-NHS-166*, ED-NHS-167*, ED-NHS-168*
	ED-NHS-166	ALLOY 230 ENV. EFFECTS ASSESSMENT	350	01JUN09	01OCT10	ED-NHS-165*	
	ED-NHS-167	GRAIN SIZE ASSESSMENT FOR ALLOY 230	120	01JUN09	13NOV09	ED-NHS-165*	
	ED-NHS-168	IHX DESIGN METHODS AND CRITERIA	483	01APR09	04FEB11	ED-NHS-165*	ED-NHS-191*, ED-NHS-192*
	ED-NHS-170	IHX PERFORMANCE VERIFICATION	980*	01OCT07	01JUL11	ED-NHS-180*	ED-NHS-192*
	ED-NHS-180	DEVELOP FACILITY DEFINITION	130	01OCT07	28MAR08	ED-NHS-100*	ED-NHS-170*, ED-NHS-190*
	ED-NHS-190	FACILITY MODIFICATION/CONSTRUCTION	655	31MAR08	01OCT10	ED-NHS-180*	
	ED-NHS-191	PROTOTYPE IHX FABRICATION	215	05APR10	28JAN11	ED-NHS-168*	ED-NHS-192
	ED-NHS-192	IHX LIFE PREDICTION AND TESTING	105	07FEB11	01JUL11	ED-NHS-168*, ED-NHS-170*, ED-NHS-191	ED-NHS-193*
	ED-NHS-193	IHX CODE CASE	585	05OCT09	30DEC11	ED-NHS-130*, ED-NHS-192*	
	ED-NHS-200	IHX - CERAMIC	2,088*	01OCT07	30SEP15	ED-NHS-220*	ED-NHS-338*
	ED-NHS-210	MATERIALS DEVELOPMENT & QUALIFICATION	520*	01OCT07	25SEP09	ED-NHS-220*	ED-NHS-290*
	ED-NHS-220	DEFINE REQUIREMENTS	0	01OCT07		ED-NHS-100*	ED-NHS-200*, ED-NHS-210*, ED-NHS-230*
	ED-NHS-230	REVIEW EXISTING TECHNOLOGY	130	01OCT07	28MAR08	ED-NHS-220*	ED-NHS-240*, ED-NHS-300*
	ED-NHS-240	SELECT REFERENCE TECHNOLOGY VENDOR	0		28MAR08	ED-NHS-230*	ED-NHS-260*, ED-NHS-270*, ED-NHS-280*,
	ED-NHS-250	DEVELOP MATERIALS PROPERTIES DATABASE	390*	31MAR08	25SEP09	ED-NHS-260*	ED-NHS-290*
	ED-NHS-260	MECHANICAL AND PHYSICAL PROPERTIES	390	31MAR08	25SEP09	ED-NHS-240*	ED-NHS-250*
	ED-NHS-270	FRACTURE BEHAVIOR/WIEBULL STATISTICS DATA	390	31MAR08	25SEP09	ED-NHS-240*	
	ED-NHS-280	HELIUM ENVIRONMENT COMPATIBILITY DATA	390	31MAR08	25SEP09	ED-NHS-240*	
	ED-NHS-290	LONG-TERM ENVIRONMENT AGING TESTS	390	31MAR08	25SEP09	ED-NHS-210*, ED-NHS-240*, ED-NHS-250*	
	ED-NHS-300	PREPARE & ISSUE DESIGN METHODS & CRITERIA	650	31MAR08	24SEP10	ED-NHS-230*	ED-NHS-305*, ED-NHS-338*
	ED-NHS-305	PERFORMANCE VERIFICATION	915	29MAR10	27SEP13	ED-NHS-300*	
	ED-NHS-310	MANUFACTURING TECHNOLOGY ASSESSMENTS	650*	31MAR08	24SEP10	ED-NHS-320*	ED-NHS-335*
	ED-NHS-320	CERAMIC TO CERAMIC JOINTS	390	31MAR08	25SEP09	ED-NHS-240*	ED-NHS-310*, ED-NHS-330*
	ED-NHS-330	CERAMIC TO METAL JOINTS	390	31MAR08	25SEP09	ED-NHS-320*	ED-NHS-335*
	ED-NHS-335	HEADER/PIPING DEVELOPMENT	260	28SEP09	24SEP10	ED-NHS-310*, ED-NHS-330*	
	ED-NHS-338	CODES AND STANDARDS	1,308	27SEP10	30SEP15	ED-NHS-200*, ED-NHS-300*	
	ED-NHS-340	PRIMARY HTS HIGH TEMP DUCTS & INSULATION	522	31MAR08	30MAR10	ED-NHS-240*	
2 22 HPF HYDROGEN PRODUCTION FACILITY							
	ED-HPF-100	PREPARE & ISSUE HPF R&D PLAN	66	01OCT07	31DEC07		ED-HPF-120*, ED-HPF-130*, ED-HPF-170*,
	ED-HPF-110	BASIC DATA	420*	01OCT07	08MAY09	ED-HPF-120*	ED-HPF-140*
	ED-HPF-120	RESEARCH & DEVELOP THERMODYNAMIC DATA	240	01OCT07	29AUG08	ED-HPF-100*	ED-HPF-110*, ED-HPF-140*, ED-HPF-150*
	ED-HPF-130	RESEARCH & DEVELOP REACTION KINETICS DATA	240	01OCT07	29AUG08	ED-HPF-100*	ED-HPF-140*
	ED-HPF-140	PERFORM DATA ANALYSIS & ISSUE RESULTS	180	01SEP08	08MAY09	ED-HPF-110*, ED-HPF-120*, ED-HPF-130*	
	ED-HPF-150	SUPPLEMENTARY MATERIALS	480	24NOV08	24SEP10	ED-HPF-120*	ED-HPF-200*
	ED-HPF-160	DECOMPOSER	1,485*	01OCT07	07JUN13	ED-HPF-170*	ED-HPF-195*
	ED-HPF-170	RESEARCH & DEVELOP CATALYST & ISSUE RESULTS	480	01OCT07	31JUL09	ED-HPF-100*	ED-HPF-160*
	ED-HPF-180	RESEARCH & DEVELOP CERAMIC & ISSUE RESULTS	240	01OCT07	29AUG08	ED-HPF-100*	ED-HPF-182*
	ED-HPF-182	R&D CERAMIC TO METAL BONDING	600	20APR09	05AUG11	ED-HPF-180*	ED-HPF-195*
	ED-HPF-190	RESEARCH & DEV. SEALING MATERIALS & ISSUE RESLTS	600	01OCT07	15JAN10	ED-HPF-100*	
	ED-HPF-195	PILOT TESTING	480	08AUG11	07JUN13	ED-HPF-160*, ED-HPF-182*	
	ED-HPF-200	PERFORM SULFURIC ACID CONCENTRATOR HETP TESTS	240	24NOV08	23OCT09	ED-HPF-150*	
	ED-HPF-210	ELECTROLYZER	2,400*	01OCT07	09DEC16	ED-HPF-220*	ED-HPF-280*
	ED-HPF-220	PERFORM CATALYST LOADING TESTS & ISSUE RESULTS	480	01OCT07	31JUL09	ED-HPF-100*	ED-HPF-210*
	ED-HPF-230	RESEARCH & DEVELOP CELL MEMBRANE & ISSUE RESULTS	480	01OCT07	31JUL09	ED-HPF-100*	ED-HPF-240*
	ED-HPF-240	CELL DEVELOPMENT	360	03AUG09	17DEC10	ED-HPF-230*	ED-HPF-250*
	ED-HPF-250	PROTOTYPE CELL	360	20DEC10	04MAY12	ED-HPF-240*	ED-HPF-260*
	ED-HPF-260	PILOT CELL	360	07MAY12	20SEP13	ED-HPF-250*	ED-HPF-270*
	ED-HPF-270	PILOT PLANT	360	23SEP13	06FEB15	ED-HPF-260*	ED-HPF-280*
	ED-HPF-280	BUILD FULL-SCALE DEMO AT IDAHO	480	09FEB15	09DEC16	ED-HPF-210*, ED-HPF-270*	
2 22 PCF POWER CONVERSION FACILITY							
	ED-PCF-100	STEAM GENERATORS	1,305*	01OCT07	28SEP12	ED-PCF-110*	ED-PCF-171*
	ED-PCF-110	PREPARE & ISSUE PCF R&D PLAN	66	01OCT07	31DEC07		ED-PCF-100*, ED-PCF-120*
	ED-PCF-120	REVIEW/REASSEMBLE EXISTING SG DEVELOPMENT DATA	262	01OCT07	30SEP08	ED-PCF-110*	ED-PCF-130*, ED-PCF-140*, ED-PCF-150*,
	ED-PCF-130	PERFORM INLET FLOW DISTRIBUTION	739	01OCT08	01AUG11	ED-PCF-120*	
	ED-PCF-140	PERFORM INSULATION VERIFICATION TESTING	523	01OCT08	01OCT10	ED-PCF-120*	
	ED-PCF-150	PERFORM FRETTING & SLIDING WEAR PROTECTION TESTS	523	01OCT08	01OCT10	ED-PCF-120*	ED-PCF-171*

Start Date 01OCT07
Finish Date 09DEC16
Data Date 01OCT07
Run Date 18MAY07 14:08

Early Bar
Progress Bar
Critical Activity

NGPP

NGNP PROJECT CONCEPTUAL DESIGN

Sheet 1 of 2

Date	Revision	Checked	Approved

© Primavera Systems, Inc.

WBS	Activity ID	Activity Description	Orig Dur	Early Start	Early Finish	Predecessors	Successors
	ED-PCF-160	PERFORM TUBE WEAR PROTECTION DEVICE TESTING	978	01OCT08	25JUN12	ED-PCF-120*	
	ED-PCF-170	PERFORM SHROUD SEAL TESTING	913	01OCT08	30MAR12	ED-PCF-120*	
	ED-PCF-171	LEAD-IN/LEAD-OUT/TRANS./EXPANSION LOOP MOCKUPS	521	01OCT10	28SEP12	ED-PCF-100*, ED-PCF-150*	
	ED-PCF-180	DEVELOP TUBING INSPECTION METHODS AND EQUIPMENT	783	01OCT08	30SEP11	ED-PCF-120*	
TECHNOLOGY DEVELOPMENT							
	ED-TD-100	PREPARE TECHNOLOGY DEVELOPMENT SUMMARY REPORT	64	02FEB09*	30APR09	PA-PP-265E	ED-TD-110*
	ED-TD-110	ISSUE TECHNOLOGY DEVELOPMENT SUMMARY REPORT	0		30APR09	ED-TD-100*	
2.32.000	CONCEPTUAL DESIGN						
2.32 PSE	ED-CD-100	PLANT LEVEL DESIGN & INTEGRATION	392*	01OCT07	31MAR09	ED-CD-120*	ED-CD-420*
	ED-CD-110	CONCEPTUAL DESIGN FUTURE STUDIES	89*	01OCT07	31JAN08	ED-CD-120*	ED-CD-170*
	ED-CD-120	PREP & ISSUE STUDY C.1 HEAT APPLICATION ASSESS	66	01OCT07	31DEC07		ED-CD-100*, ED-CD-110*, ED-PM-100*
	ED-CD-130	PREP & ISSUE STUDY C.2 TOP LEVEL REQS & PLANS	66	01OCT07	31DEC07		ED-CD-210*
	ED-CD-140	PREP & ISSUE STUDY C.3 INITIAL LICENSING EVENTS	89	01OCT07	31JAN08		
	ED-CD-150	PREP & ISSUE STUDY C.7 VALUE ENGINEERING	89	01OCT07	31JAN08		
	ED-CD-160	PREP & ISSUE STUDY C.9 CONSTRUCTION MODULARIZTN	89	01OCT07	31JAN08		
	ED-CD-170	PREP & ISSUE STUDY C.12 MAJOR EQUIP TRANS & FAB	89	01OCT07	31JAN08	ED-CD-110*	
	ED-CD-180	PLANT LEVEL ENGINEERING	392*	01OCT07	31MAR09	ED-CD-190*	ED-CD-310*
	ED-CD-190	UPDATE PLANT LEVEL REQ AND FUNCTIONAL ANALYSIS	40	01OCT07	23NOV07		ED-CD-180*, ED-CD-200*
	ED-CD-200	DESIGN FOR NUCLEAR SAFETY ISSUE	20	12NOV07	07DEC07	ED-CD-190*	
	ED-CD-210	PERFORM PLANT LEVEL DESIGN & ISSUE DOCUMENTATION	59	01JAN08	21MAR08	ED-CD-130*	ED-CD-220*
	ED-CD-220	PERFORM HAZOP & ISSUE RESULTS	15	09MAR08	25MAR08	ED-CD-210*	ED-CD-230*
	ED-CD-230	DESIGN & ISSUE INFRASTRUCTURE (INCL FMECA) DOCS	39	01APR08	23MAY08	ED-CD-220*	ED-CD-240*
	ED-CD-240	PERFORM FUNCTIONAL AREAS REQS ANALYSIS/RESULTS	39	01APR08	23MAY08	ED-CD-230*	ED-CD-250*
	ED-CD-250	UPDATE DESIGN FOR NUCLEAR SAFETY	21	02JUN08	30JUN08	ED-CD-240*	ED-CD-260*, ED-CD-270*
	ED-CD-260	PERFORM PLANT PRELIMINARY DESIGN REVIEW	23	01JUL08	31JUL08	ED-CD-250*	
	ED-CD-270	DESIGN & ISSUE PLANT CONCEPT LAYOUTS	44	02JUN08	31JUL08	ED-CD-250*	ED-CD-280*
	ED-CD-280	PERFORM CONCEPT DESIGN ANALYSIS & ISSUE RESULTS	25	01AUG08	04SEP08	ED-CD-270*	ED-CD-290*
	ED-CD-290	PERFORM HAZOP 2 & ISSUE RESULTS	11	01SEP08	15SEP08	ED-CD-280*	
	ED-CD-300	PLANT SYSTEM DESIGN REVIEW	13	15DEC08*	31DEC08		ED-CD-310*
	ED-CD-310	PERFORM SEISMIC ANALYSIS & ISSUE RESULTS	64	01JAN09	31MAR09	ED-CD-180*, ED-CD-300*	
	ED-CD-320	PLANT SAFETY & INVESTMENT PROTECTION ASSESSMENTS	392*	01OCT07	31MAR09	ED-CD-370	ED-CD-360*
	ED-CD-330	DEVELOP INTERNAL EVENTS PRA MODEL	272	01NOV07*	14NOV08		ED-CD-340*, ED-CD-350*
	ED-CD-340	DEVELOP EXTERNAL EVENTS PRA MODEL	293	01NOV07	15DEC08	ED-CD-330*	
	ED-CD-350	PERFORM EVENT CONSEQUENCE ANALYSIS/RESULTS	195	03DEC07	29AUG08	ED-CD-330*	ED-CD-360*
	ED-CD-360	PERFORM RISK ANALYSIS & ISSUE RESULTS	185	16JUL08	31MAR09	ED-CD-320*, ED-CD-350*	
	ED-CD-370	DESIGN & LICENSING SUPPORT & INTERFACE	370	01OCT07	27FEB09		ED-CD-320
	ED-CD-380	PRA PLANNING, INTEGRATION & REVIEW	392	01OCT07	31MAR09		ED-CD-390*
	ED-CD-390	PREP REVISED NGNP PROJECT COST ESTIMATE REPORT	42	02FEB09	31MAR09	ED-CD-380*	ED-CD-400*, ED-CD-410*
	ED-CD-400	ISSUE REVISED COST ESTIMATE REPORT	0		31MAR09	ED-CD-390*	
	ED-CD-410	PREP CONCEPTUAL DESIGN SUMMARY REPORT	42	02FEB09	31MAR09	ED-CD-390*	ED-CD-420*
	ED-CD-420	ISSUE PLANT LEVEL CONCEPTUAL DESIGN SUMMARY RPT	0		31MAR09	ED-CD-100*, ED-CD-410*	
	ED-CD-430	OVERALL SITE & BOP	392*	01OCT07	31MAR09	ED-CD-450*	ED-CD-550*
	ED-CD-440	CONCEPTUAL DESIGN FUTURE STUDIES	89*	01OCT07	31JAN08	ED-CD-450*	ED-CD-450*
	ED-CD-450	PREPARE AND ISSUE STUDY C.5 PLANT LAYOUT	89	01OCT07	31JAN08	ED-CD-440*	ED-CD-430*, ED-CD-440*, ED-CD-460*
	ED-CD-460	PREP & ISSUE STUDY C.10 WASTEWTR TREATMENT OPT.	43	01NOV07	31DEC07	ED-CD-450*	
	ED-CD-470	GEOTECHNICAL	196*	24DEC07	22SEP08	ED-CD-480*	ED-CD-490*
	ED-CD-480	PERFORM GEOTECHNICAL INVESTIGATION/ISSUE RESULTS	175	24DEC07*	22AUG08		ED-CD-470*, ED-CD-490*, ED-CD-500*
	ED-CD-490	PERFORM PROBABILISTIC SEISMIC HAZARD ANALYSIS	171	28JAN08	22SEP08	ED-CD-470*, ED-CD-480*	
	ED-CD-500	PREPARE & ISSUE BUILDING REQUIREMENT DOCUMENTS	87	01JAN08	30APR08	ED-CD-480*	
	ED-CD-510	PREPARE & ISSUE CONCEPTUAL EQUIP & SYSTEM CALCS	392	01OCT07	31MAR09		ED-CD-520*, ED-CD-540*
	ED-CD-520	DESIGN & ISSUE PFDS AND UFDS	196	01JAN08	30SEP08	ED-CD-510*	
	ED-CD-530	DESIGN & ISSUE BUILDING LAYOUT DRAWINGS	185	01OCT07	13JUN08		ED-CD-535*
	ED-CD-535	UPDATE & ISSUE REVISED PLOT PLAN	34	16JUN08	31JUL08	ED-CD-530*	
	ED-CD-540	PREPARE BOP CONCEPTUAL DESIGN SUMMARY REPORT	42	02FEB09	31MAR09	ED-CD-510*	ED-CD-550*
	ED-CD-550	ISSUE BOP CONCEPTUAL DESIGN SUMMARY REPORT	0		31MAR09	ED-CD-430*, ED-CD-540*, ED-PM-100*	
2.32 NHS	ED-CD-560	NUCLEAR HEAT SUPPLY FACILITY	392*	01OCT07	31MAR09	ED-CD-570*, ED-CD-580*	ED-CD-670*
	ED-CD-570	PREP & ISSUE STUDY C.4 NHSS CONFIGURATION	110	01OCT07	29FEB08		ED-CD-560*, ED-CD-590*
	ED-CD-580	NHS ENGINEERING	282*	03MAR08	31MAR09	ED-CD-590*	ED-CD-560*
	ED-CD-585	NHS ENGINEERING INTEGRATION	65*	03MAR08	30MAY08	ED-CD-590*	ED-CD-600*
	ED-CD-590	PERFORM NHS REQS & FUNCTIONAL ANALYSIS/RESULTS	60	03MAR08	23MAY08	ED-CD-570*	ED-CD-580*, ED-CD-585*, ED-CD-600*
	ED-CD-600	DESIGN INTEGRATED HEAT GENERATION UNIT	30	21APR08	30MAY08	ED-CD-585*, ED-CD-590*	ED-CD-610*
	ED-CD-610	DESIGN & ISSUE OF CRITICAL NHSS SYSTEMS	120	02JUN08	14NOV08	ED-CD-600*	ED-CD-620*
	ED-CD-620	DESIGN & ISSUE OF NHS ELECTRICAL SYSTEM	60	15SEP08	05DEC08	ED-CD-610*	ED-CD-630*
	ED-CD-630	DESIGN & ISSUE OF NHS CONTROL & INSTRUMENTATION	76	01SEP08	15DEC08	ED-CD-620*	ED-CD-640*
	ED-CD-640	DESIGN & ISSUE OF NHS SUPPORT SYSTEMS	328	01OCT07	31DEC08	ED-CD-630*	ED-CD-650*
	ED-CD-650	DESIGN & ISSUE NHS BUILDING	328	01OCT07	31DEC08	ED-CD-640*	ED-CD-660*
	ED-CD-660	PREPARE NHS CONCEPTUAL DESIGN SUMMARY REPORT	54	15JAN09	31MAR09	ED-CD-650*	ED-CD-670*
	ED-CD-670	ISSUE NHS CONCEPTUAL DESIGN SUMMARY REPORT	0		31MAR09	ED-CD-560*, ED-CD-660*	
2.32 HPF	ED-CD-680	HYDROGEN PRODUCTION FACILITY	392*	01OCT07	31MAR09	ED-CD-690*	ED-RD-150*
	ED-CD-690	PLAN CONCEPTUAL DESIGN EFFORT	12	01OCT07	16OCT07		ED-CD-680*
	ED-CD-700	PREP & ISSUE STUDY C.6 HYDROGEN PROCESS/MATL SEL	110	01OCT07	29FEB08		ED-CD-730*, ED-CD-740*
	ED-CD-720	PREPARE & ISSUE BASIC CONFIGURATION STUDIES	65*	03MAR08	30MAY08	ED-CD-730*	ED-CD-760*
	ED-CD-730	PREPARE & ISSUE PRODUCT SPECIFICATIONS	21	03MAR08	31MAR08	ED-CD-700*	ED-CD-720*, ED-CD-760*, ED-CD-800*
	ED-CD-740	OPTIMIZE OPERATING CONDITIONS & ISSUE RESULTS	27	03MAR08	08APR08	ED-CD-700*	ED-CD-750*, ED-CD-840*
	ED-CD-750	OPTIMIZATION OF ACID STORAGE/LETDOWN & RESULTS	16	09APR08	30APR08	ED-CD-740*	ED-CD-770*
	ED-CD-760	PREPARE & ISSUE ELECTROLYZER STUDIES	44	01APR08	30MAY08	ED-CD-720*, ED-CD-730*	ED-CD-780*
	ED-CD-770	OPTIMIZED ELECROLYZER/ABSORBER CONFIG	12	08MAY08	23MAY08	ED-CD-750*	
	ED-CD-780	ELECTROLYZER PURITY REQUIREMENTS	44	01APR08	30MAY08	ED-CD-760*	
	ED-CD-790	PREPARE & ISSUE DECOMPOSER STUDIES	33*	17MAR08	30APR08	ED-CD-800*	ED-CD-820*
	ED-CD-800	PRELIMINARY CONFIGURATION STUDY	11	17MAR08	31MAR08	ED-CD-730*, ED-CD-810*	
	ED-CD-810	INTEGRATION MEETING	0		31MAR08	ED-CD-800*	ED-CD-820*
	ED-CD-820	DEVELOP CONCEPTUAL CONFIGURATION & ISSUE RESULT	22	01APR08	30APR08	ED-CD-790*, ED-CD-810*	
	ED-CD-830	HPF ENGINEERING	163*	16APR08	28NOV08	ED-CD-840*	ED-CD-920*
	ED-CD-840	PERFORM PCF REQS & FUNCTIONAL ANALYSIS/RESULTS	38	16APR08	05JUN08	ED-CD-740*	ED-CD-830*, ED-CD-850*
	ED-CD-850	PREP & ISSUE DESIGN BASIS, FLOW DIA, & M&E BAL	21	19MAY08	12JUN08	ED-CD-840*	ED-CD-860*, ED-CD-880*, ED-CD-890*
	ED-CD-860	PREP & ISSUE MATERIAL S&DESIGN COND FOR FLOW SHT	9	13JUN08	25JUN08	ED-CD-850*	ED-CD-870*
	ED-CD-870	PREP & ISSUE PRELIM PROCESS HAZARD ASSESSMENT	3	26JUN08	30JUN08	ED-CD-860*	
	ED-CD-880	PREP & ISSUE EQUIP LIST AND PROCESS DATA SHEETS	53	13JUN08	26AUG08	ED-CD-850*	ED-CD-900*
	ED-CD-890	PREP & ISSUE ELECTROLYZER/DECOMPOSER DRAWINGS	14	13JUN08	02JUL08	ED-CD-850*	
	ED-CD-900	PREP & ISSUE P&IDS (PRELIM & KEY SYSTEMS ONLY)	50	27AUG08	04NOV08	ED-CD-880*	ED-CD-910*
	ED-CD-910	PREP & ISSUE INS DATA, ENG NOTES, OPER GUIDELINE	17	20OCT08	14NOV08	ED-CD-900*	ED-CD-920*
	ED-CD-920	PREP & ISSUE PRELIM HAZOPS & FMEA (SELECT SYS)	24	28OCT08	28NOV08	ED-CD-830*, ED-CD-910*	ED-CD-930*
	ED-CD-930	PREP & ISSUE SAFETY REVISIONS	14	01DEC08	18DEC08	ED-CD-920*	ED-CD-950*, ED-CD-970*
	ED-CD-940	PIPING AND MECHANICAL STUDIES	42*	24NOV08	20JAN09	ED-CD-950*	ED-CD-970*
	ED-CD-950	DESIGN ISSUE DECOMPOSER ARRANGEMENT & PLOT	14	24NOV08	11DEC08	ED-CD-930*	ED-CD-940*, ED-CD-960*
	ED-CD-960	INTEGRATION MEETING	3	10DEC08	12DEC08	ED-CD-950*	ED-CD-970
	ED-CD-970	FINALIZE & ISSUE DECOMPOSER ARRANGEMENT & PLOT	14	01JAN09	20JAN09	ED-CD-930*, ED-CD-940*, ED-CD-960	ED-RD-110*, ED-RD-140*
2.32 PM2	ED-PM-100	PROJECT MANAGEMENT	392*	01OCT07	31MAR09	ED-CD-120*	ED-CD-560*
	ED-RD-100	ISSUE R&D PLAN REVISION	22	22SEP08*	21OCT08		ED-RD-130*
	ED-RD-110	DEVELOP & ISSUE ESTIMATE	8	21JAN09	30JAN09	ED-CD-970*	ED-RD-120*
	ED-RD-120	DEVELOP & ISSUE SCHEDULE	8	21JAN09	30JAN09	ED-RD-110*	
	ED-RD-130	PREPARE & ISSUE PRELIM DESIGN PLAN	33	15SEP08	29OCT08	ED-RD-100*	
	ED-RD-140	PREPARE HPF CONCEPTUAL DESIGN SUMMARY REPORT	50	21JAN09	31MAR09	ED-CD-970*	ED-RD-150*
	ED-RD-150	ISSUE HPF CONCEPTUAL DESIGN SUMMARY REPORT	0		31MAR09	ED-CD-680*, ED-RD-140*	
	ED-RD-160	CONDUCT ENGINEERING SUPPORT DURING R&D	392	01OCT07	31MAR09		
2.32 PCF	ED-RD-170	POWER CONVERSION FACILITY	392*	01OCT07	31MAR09	ED-RD-180*	ED-RD-370*
	ED-RD-180	PREP & ISSUE STUDY C.11 STEAM GENERATOR DESIGN	89	01OCT07	31JAN08		ED-RD-170*, ED-RD-200*, ED-RD-210*, ED-RD-240
	ED-RD-190	ENGINEERING STUDIES	107*	01FEB08	30JUN08	ED-RD-200*	ED-RD-200*
	ED-RD-200	PERFORM & ISSUE PCS OPTIMIZATION RESULTS	107*	01FEB08	30JUN08	ED-RD-180*, ED-RD-190*	ED-RD-190*
	ED-RD-210	PERFORM & ISSUE PCS DESIGN BASIS TRANSIENT ASSMT	86	01FEB08	30MAY08	ED-RD-180*	ED-RD-230*
	ED-RD-220	PCF ENGINEERING	288*	22FEB08	31MAR09	ED-RD-230*	ED-RD-370*
	ED-RD-230	PERFORM PCF REQS & FUNCTIONAL ANALYSIS/RESULTS	35	22FEB08	10APR08	ED-RD-210*	ED-RD-220*, ED-RD-240*
	ED-RD-240	PREP & ISSUE PCF SYSTEM REQUIREMENTS DOCUMENTS	89	18APR08	20AUG08	ED-RD-180, ED-RD-230*	ED-RD-250*, ED-RD-280*, ED-RD-320*, ED-RD-340*,
	ED-RD-250	PREP & ISSUE STEAM GENERATOR REQUIREMENT DOCS	67	24JUL08	24OCT08	ED-RD-240*	ED-RD-260*
	ED-RD-260	PREP & ISSUE STEAM GENERATOR PERFORMANCE SPEC	56	20OCT08	07JAN09	ED-RD-250*	ED-RD-270*
	ED-RD-270	DESIGN & ISSUE STEAM GENERATOR AREA LAYOUT/DWGS	27	06OCT08	11NOV08	ED-RD-260*	ED-RD-290*, ED-RD-300*
	ED-RD-280	PREP & ISSUE STG REQUIREMENT DOCUMENT	67	21AUG08	21NOV08	ED-RD-240*	ED-RD-310*
	ED-RD-290	PREP & ISSUE STG PERFORMANCE SPEC	67	12NOV08	12FEB09	ED-RD-270*	
	ED-RD-300	DESIGN & ISSUE STG AREA LAYOUT & DRAWINGS	44	12NOV08	12JAN09	ED-RD-270*	
	ED-RD-310	PREP & ISSUE AIR COOLED CONDENSER REQ. DOCUMENT	45	24NOV08	23JAN09	ED-RD-280*	ED-RD-330*, ED-RD-360*
	ED-RD-320	PREP & ISSUE AIR COOLED CONDENSER PERF SPEC	67	21AUG08	21NOV08	ED-RD-240*	
	ED-RD-330	DESIGN & ISSUE AIR COOLED CONDENSER LAYOUT/DWGS	44	26JAN09	31MAR09	ED-RD-310*	
	ED-RD-340	PREP & ISSUE STG BUILDING REQUIREMENT DOCUMENTS	82	21AUG08	12DEC08	ED-RD-240*	
	ED-RD-350	PREP & ISSUE SG BUILDING REQUIREMENT DOCUMENT	83	21AUG08	15DEC08	ED-RD-240*	
	ED-RD-360	PREPARE PCF CONCEPTUAL DESIGN SUMMARY REPORT	44	28JAN09	31MAR09	ED-RD-310*	ED-RD-370*
	ED-RD-370	ISSUE PCF CONCEPTUAL DESIGN SUMMARY REPORT	0		31MAR09	ED-RD-170*, ED-RD-220*, ED-RD-360*	

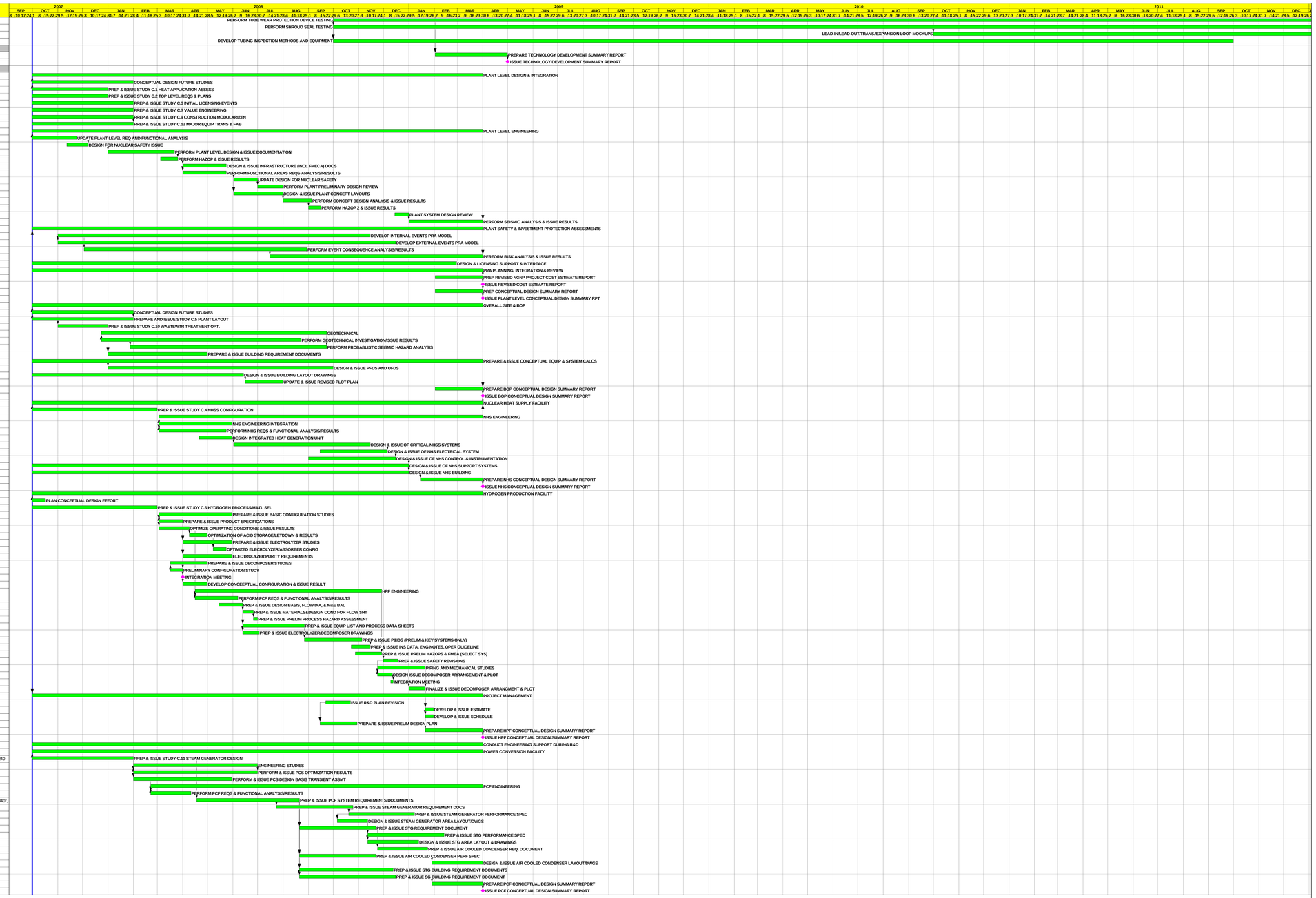

Start Date	01OCT07
Finish Date	09OCT15
Data Date	01OCT07
Run Date	18MAY07 14:08

Early Bar
Progress Bar
Critical Activity

NGPP

NGNP PROJECT CONCEPTUAL DESIGN

Sheet 2 of 2

Date	Revision	Checked	Approved

© Primavera Systems, Inc.

WBS	Activity ID	Activity Description	Orig Dur	Early Start	Early Finish
REFERENCE BASELINES					
	RB-1000	PRE-PRODUCTION FUEL AVAILABLE FROM PBMR ACF	0		15JAN08*
	RB-2000	PRODUCTION FUEL AVAILABLE	0		11JUL12*
PROGRAMMATIC ACTIVITIES					
CONCEPTUAL DESIGN FUTURE STUDIES					
	PA-CD-100	PREP & ISSUE STUDY C.8 COLA PRE-APP. STRATEGY	89	01OCT07	31JAN08
PREPARE OR REVIEW THE CONCEPTUAL DESIGN PLAN					
	PA-CD-110	PREPARE SCOPE	23	02FEB09	04MAR09
	PA-CD-120	SCHEDULE DEVELOPMENT	45	02FEB09	03APR09
	PA-CD-130	BUDGET DEVELOPMENT	45	02FEB09	03APR09
	PA-CD-140	BEA APPROVAL OF THE PLAN	21	06APR09	04MAY09
35% DESIGN REVIEW INCLUDING VALUE ENGINEERING					
	PA-35-100	35% DESIGN REVIEW INCLUDING VALUE ENGINEERING	44*	31MAR08	29MAY08
	PA-35-110	SUBMIT PACKAGE TO BEA	0	31MAR08*	
	PA-35-112	FUTURE STUDIES	1	31MAR08	31MAR08
	PA-35-115	TL USER REQUIREMENTS	1	31MAR08	31MAR08
	PA-35-117	PD&I OUTPUT	1	31MAR08	31MAR08
	PA-35-120	REVIEW MEETING	0	15APR08*	
	PA-35-130	INCORPORATE COMMENTS	33	15APR08	29MAY08
90% DESIGN REVIEW INCLUDING VALUE ENGINEERING					
	PA-90-100	90% DESIGN REVIEW INCLUDING VALUE ENGINEERING	42*	30JAN09	30MAR09
	PA-90-110	SUBMIT PACKAGE TO BEA	0	30JAN09*	
	PA-90-110A	ADDITIONAL STUDIES	1	30JAN09	30JAN09
	PA-90-110B	TL PLANT REQUIREMENTS	1	30JAN09	30JAN09
	PA-90-110C	PD&I OUTPUT	1	30JAN09	30JAN09
	PA-90-110D	MAJOR SDDs INCLUDING P&IDS	1	30JAN09	30JAN09
	PA-90-110E	PRELIMINARY INTEGRATED SAFETY ASSESSMENT	1	30JAN09	30JAN09
	PA-90-110F	R&D PLAN UPDATE	1	30JAN09	30JAN09
	PA-90-110G	REGULATORY MANAGEMENT PLAN UPDATE	1	30JAN09	30JAN09
	PA-90-110H	NGNP SCHEDULE UPDATE	1	30JAN09	30JAN09
	PA-90-110I	BUDGET COST ESTIMATE	1	30JAN09	30JAN09
	PA-90-110J	PMP UPDATE	1	30JAN09	30JAN09
	PA-90-110K	PLAN FOR PRELIMINARY DESIGN	1	30JAN09	30JAN09
	PA-90-110L	CONSTRUCTABILITY REVIEW REPORT	1	30JAN09	30JAN09
	PA-90-120	REVIEW MEETING	0	27FEB09*	
	PA-90-130	INCORPORATE COMMENTS	22	27FEB09	30MAR09
PLANS & PROCEDURES					
	PA-PP-100	PROJECT MANAGEMENT PLAN	89*	02FEB09	04JUN09
	PA-PP-110	PREPARATION	45	02FEB09	03APR09
	PA-PP-120	ISSUE DRAFT	0		03APR09
	PA-PP-130	BEA REVIEW	21	06APR09	04MAY09
	PA-PP-140	INCORPORATE COMMENTS	23	05MAY09	04JUN09
	PA-PP-150	ISSUE FINAL	0		04JUN09
	PA-PP-160	QUALITY ASSURANCE PLAN	89*	02FEB09	04JUN09
	PA-PP-170	PREPARATION	45	02FEB09	03APR09
	PA-PP-180	ISSUE DRAFT	0		03APR09
	PA-PP-190	BEA REVIEW	21	06APR09	04MAY09
	PA-PP-200	INCORPORATE COMMENTS	23	05MAY09	04JUN09
	PA-PP-210	ISSUE FINAL	0		04JUN09
	PA-PP-220	ENGINEERING PROCEDURES	66*	02FEB09	04MAY09

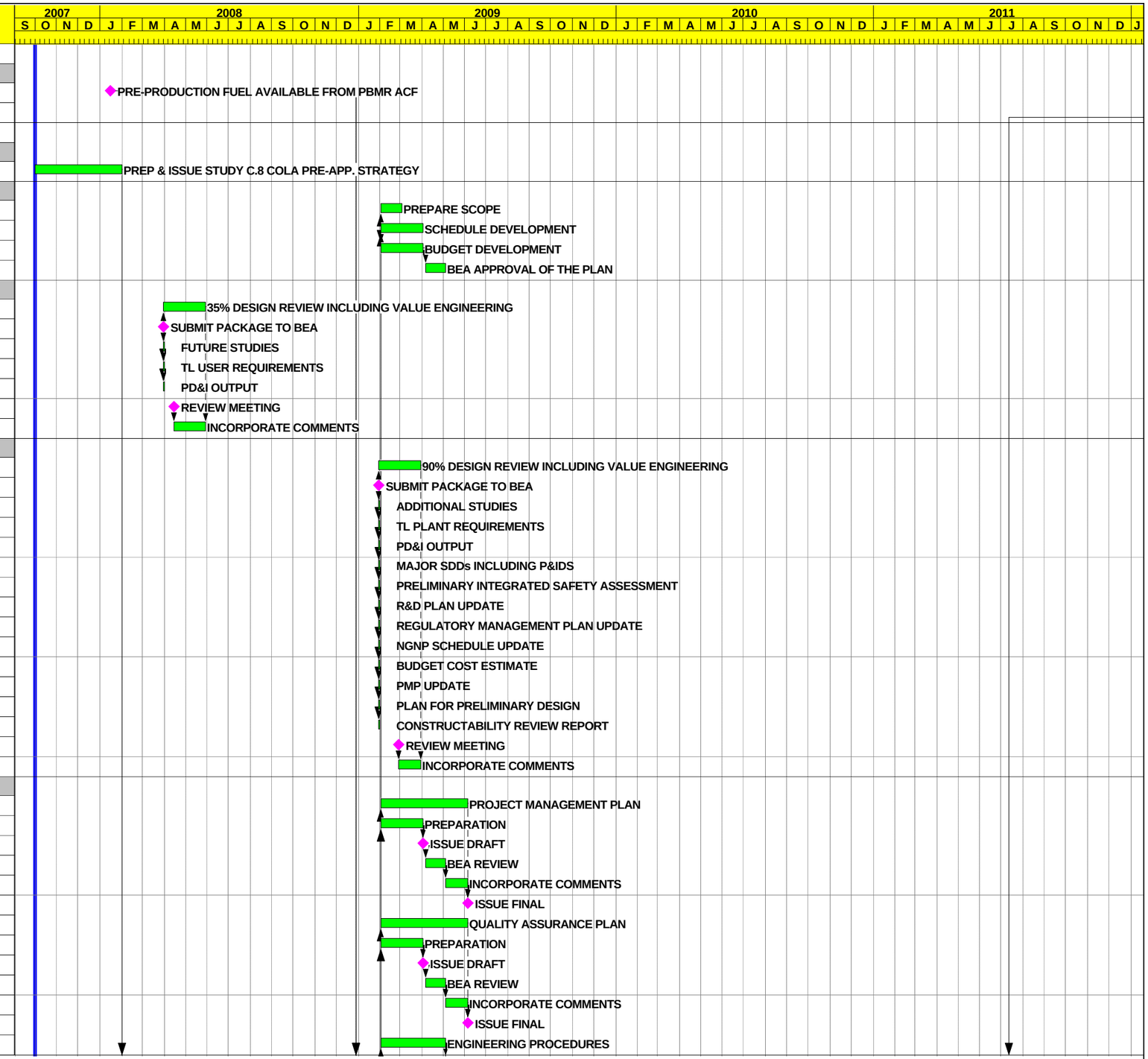

Start Date	01OCT07
Finish Date	09DEC16
Data Date	01OCT07
Run Date	18MAY07 14:03

Early Bar
Progress Bar
Critical Activity

NGPP

Sheet 1 of 7

NGNP PROJECT CONCEPTUAL DESIGN

Date	Revision	Checked	Approved

© Primavera Systems, Inc.

WBS	Activity ID	Activity Description	Orig Dur	Early Start	Early Finish
	PA-PP-230	PREPARE DOCUMENTS	66	02FEB09	04MAY09
	PA-PP-240	ISSUE DOCUMENTS	0		04MAY09
	PA-PP-250	REGULATORY MANAGEMENT PLAN	328*	01OCT07	31DEC08
	PA-PP-260	PREPARATION & PLANNING	196*	01OCT07	30JUN08
	PA-PP-260A	Plan schedule and LRB contents with DOE	89	01OCT07	31JAN08
	PA-PP-260B	Establish schedule and LRB contents with NRC	107	01FEB08	30JUN08
	PA-PP-265	Outline LRB Document	217*	03DEC07	30SEP08
	PA-PP-265A	Administrative Issues	195	03DEC07	29AUG08
	PA-PP-265B	ESP and COL application contents	162	03DEC07	15JUL08
	PA-PP-265C	PBMR topical and technical issue applicability	162	03DEC07	15JUL08
	PA-PP-265D	NGNP-specific issues	131	01APR08	30SEP08
	PA-PP-265E	Establish NRC R&D needs	131	01APR08	30SEP08
	PA-PP-268	Prepare Environmental Permitting Compliance Plan	66*	01NOV07	31JAN08
	PA-PP-268A	Revise Pre-conceptual Env. Permitting Plan	22	01NOV07*	30NOV07
	PA-PP-268C	Document Environmental Compliance Basis	21	03DEC07	31DEC07
	PA-PP-268D	Draft State & Local permits section - COL Env.	23	01JAN08	31JAN08
	PA-PP-270	ISSUE DRAFT	131*	01APR08	30SEP08
	PA-PP-270A	Annotated outline	55	01APR08	16JUN08
	PA-PP-270B	Draft for internal review	44	17JUN08	15AUG08
	PA-PP-270C	Final internal draft	32	18AUG08	30SEP08
	PA-PP-280	BEA REVIEW	23	01OCT08	31OCT08
	PA-PP-290	INCORPORATE COMMENTS	20	03NOV08	28NOV08
	PA-PP-300	ISSUE FINAL	23	01DEC08	31DEC08
	PA-PP-310	PROBABILITY RISK ASSESSMENT PLAN	66*	02FEB09	04MAY09
	PA-PP-320	PREPARE PLAN	66	02FEB09	04MAY09
	PA-PP-330	ISSUE PLAN	0		04MAY09
	PA-PP-340	SYSTEMS ENGINEERING PLAN	66*	02FEB09	04MAY09
	PA-PP-350	PREPARE PLAN	66	02FEB09	04MAY09
	PA-PP-360	ISSUE PLAN	0		04MAY09
	PA-PP-370	CAD/CAE PLAN	66*	02FEB09	04MAY09
	PA-PP-380	PREPARE PLAN	66	02FEB09	04MAY09
	PA-PP-390	ISSUE PLAN	0		04MAY09
SCHEDULE					
	PA-SS-100	PREPARE REVISED NGNP PROJECT SCHEDULE	42	02FEB09*	31MAR09
	PA-SS-110	ISSUE REVISED SCHEDULE	0		31MAR09
2 41 000 LICENSING & PERMITTING TO CONSTRUCT					
2 41 NRC	PA-LP-100	NRC LICENSING	1	01OCT07	01OCT07
	PA-LP-110	PREAPPLICATION INTERACTIONS WITH NRC	370	01OCT07	27FEB09
	PA-LP-120	REGULATORY MANAGEMENT PLAN BRIEFING WITH NRC	0	01FEB08	
	PA-LP-130	NGNP DESIGN FAMILIARIZATION BRIEFING WITH NRC	0	01APR08*	
	PA-LP-140	BRIEFING WITH NRC ON 500 MWth CAPABILITY	0	01JUL08*	
	PA-LP-150	BRIEFING WITH NRC ON REGULATORY TECHNOLOGY DEV.	0	01SEP08*	
	PA-LP-160	BRIEFING WITH NRC ON APPROACH TO HYDROGEN HAZARD	0	28NOV08*	
	PA-LP-170	BRIEFING WITH NRC ON APP. TO IHX ROLE	0	27FEB09*	
TECHNOLOGY DEVELOPMENT & ENGINEERING/DESIGN					
2 22 NHS NUCLEAR HEAT SUPPLY FACILITY					
	ED-NHS-100	PREPARE & ISSUE NHS R&D PLAN (EXC. FUEL & GRPHT)	66	01OCT07	31DEC07
	ED-NHS-101	PIGGY BACK IRRADIATION	1,560*	01JAN08	23DEC13
	ED-NHS-102	AGR-2 PREPARATION	260	01JAN08	29DEC08
	ED-NHS-103	AGR-2 IRRADIATION	520	30DEC08	27DEC10
	ED-NHS-104	AGR-2 DECAY	130	28DEC10	27JUN11

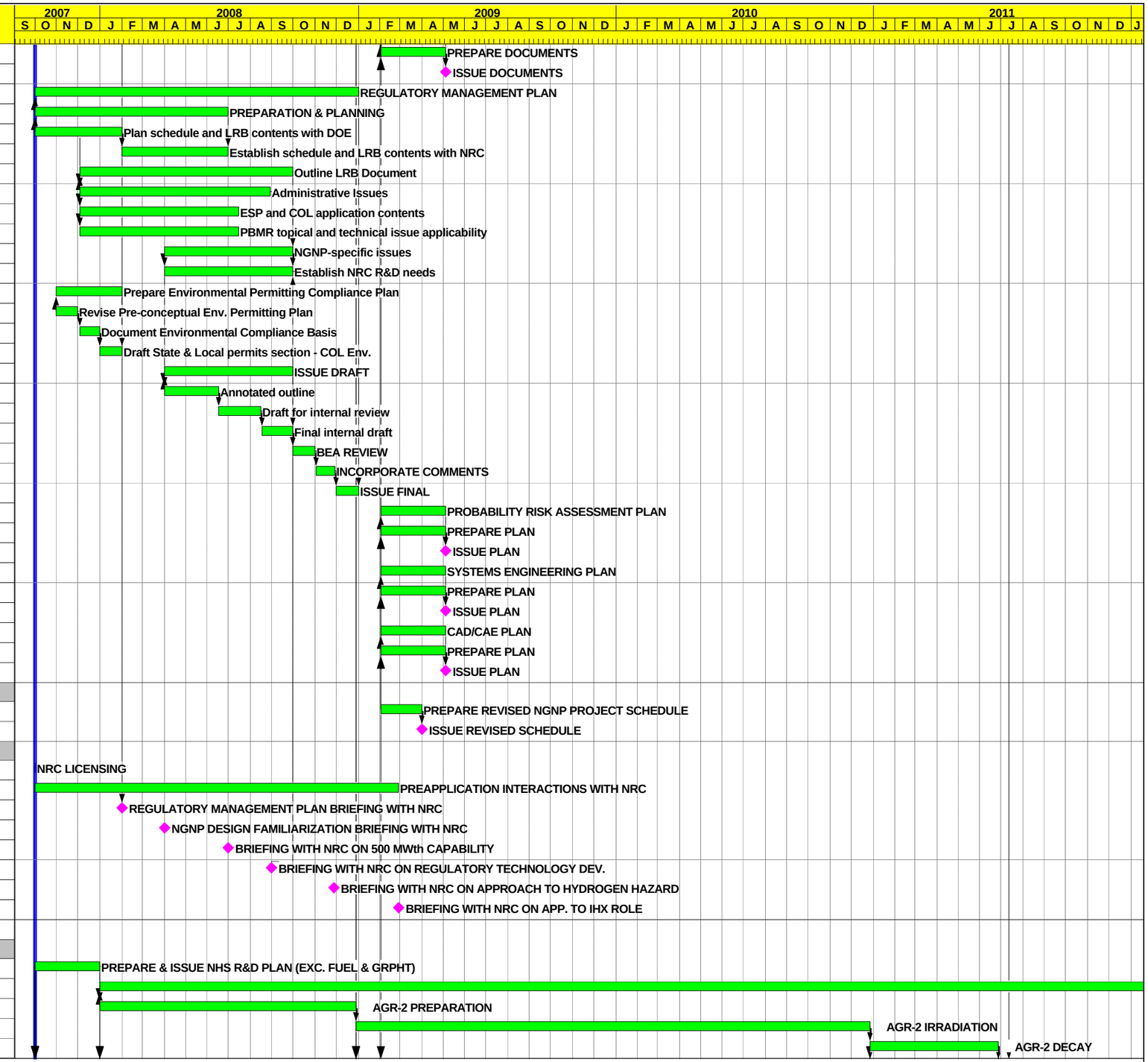

Start Date	01OCT07
Finish Date	09DEC16
Data Date	01OCT07
Run Date	18MAY07 14:03

Early Bar
Progress Bar
Critical Activity

NGPP

Sheet 2 of 7

NGNP PROJECT CONCEPTUAL DESIGN

Date	Revision	Checked	Approved

© Primavera Systems, Inc.

WBS	Activity ID	Activity Description	Orig Dur	Early Start	Early Finish
	ED-NHS-105	AGR-2 PIE	130	28JUN11	26DEC11
	ED-NHS-106	AGR-3 PREPARATION	260	30DEC08	28DEC09
	ED-NHS-107	AGR-3 IRRADIATION	520	28DEC10	24DEC12
	ED-NHS-108	AGR-3 DECAY	130	25DEC12	24JUN13
	ED-NHS-109	AGR-3 PIE	130	25JUN13	23DEC13
	ED-NHS-110	PRE - PRODUCTION FUEL IRRADIATION PROGRAM	1,045*	01JAN08	02JAN12
	ED-NHS-112	IRRADIATION PLANNING AND PREPARATION	260	01JAN08	29DEC08
	ED-NHS-115	IRRADIATION	525	30DEC08	03JAN11
	ED-NHS-116	DECAY	130	04JAN11	04JUL11
	ED-NHS-117	PIE AND ANALYSIS	130	05JUL11	02JAN12
	ED-NHS-118	HEATING TESTS, PIE, ANALYSIS	120	19JUL11	02JAN12
	ED-NHS-11A	PRODUCTION FUEL IRRADIATION	1,045*	13JUL11	14JUL15
	ED-NHS-11B	IRRADIATION PLANNING AND PREPARATION	260	13JUL11	10JUL12
	ED-NHS-11C	IRRADIATION	524	12JUL12	15JUL14
	ED-NHS-11D	DECAY	130	16JUL14	13JAN15
	ED-NHS-11E	PIE AND ANALYSIS	130	14JAN15	14JUL15
	ED-NHS-11F	HEATING TESTS, PIE, ANALYSIS	120	28JAN15	14JUL15
	ED-NHS-120	INITIAL GRAPHITE IRRADIATION PROGRAM	915	01OCT07	01APR11
	ED-NHS-121	EXTENDED GRAPHITE IRRADIATION PROGRAM	1,307	28SEP09	30SEP14
	ED-NHS-130	IHX - METALLIC	1,110*	01OCT07	30DEC11
	ED-NHS-140	MATERIALS DEVELOPMENT & QUALIFICATION	785*	01OCT07	01OCT10
	ED-NHS-150	ALLOY 617 SPECIFICATION & TESTING	785*	01OCT07	01OCT10
	ED-NHS-151	DEFINE REFERENCE ALLOY 617 SPECIFICATION	45	01OCT07	30NOV07
	ED-NHS-152	PROCURE 3 HEATS OF ALLOY 617 FOR TESTING	305	03DEC07	30JAN09
	ED-NHS-153	PERFORM TESTING FOR ALLOY 617 & ISSUE RESULTS	195	02FEB09	30OCT09
	ED-NHS-154	PERFORM WELDABILITY ASSESSMENT & ISSUE RESULTS	195	02FEB09	30OCT09
	ED-NHS-155	AGING ASSESSMENT FOR ALLOY 617	350	01JUN09	01OCT10
	ED-NHS-156	ALLOY 617 ENV. EFFECTS ASSESSMENT	350	01JUN09	01OCT10
	ED-NHS-157	GRAIN SIZE ASSESSMENT FOR ALLOY 617	130	01JUN09	27NOV09
	ED-NHS-160	ALLOY 230 SPECIFICATION & TESTING	785*	01OCT07	01OCT10
	ED-NHS-161	DEFINE REFERNECE ALLOY 230 SPECIFICATIONS	45	01OCT07	30NOV07
	ED-NHS-162	PROCURE 3 HEATS OF ALLOY 230 FOR TESTING	305	03DEC07	30JAN09
	ED-NHS-163	PERFORM TESTING FOR ALLOY 230 & ISSUE RESULTS	195	02FEB09	30OCT09
	ED-NHS-164	PERFORM WELDABILITY ASSESSMENT & ISSUE RESULTS	195	02FEB09	30OCT09
	ED-NHS-165	AGING ASSESSMENT FOR ALLOY 230	350	01JUN09	01OCT10
	ED-NHS-166	ALLOY 230 ENV. EFFECTS ASSESSMENT	350	01JUN09	01OCT10
	ED-NHS-167	GRAIN SIZE ASSESSMENT FOR ALLOY 230	120	01JUN09	13NOV09
	ED-NHS-168	IHX DESIGN METHODS AND CRITERIA	483	01APR09	04FEB11
	ED-NHS-170	IHX PERFORMANCE VERIFICATION	980*	01OCT07	01JUL11
	ED-NHS-180	DEVELOP FACILITY DEFINITION	130	01OCT07	28MAR08
	ED-NHS-190	FACILITY MODIFICATION/CONSTRUCTION	655	31MAR08	01OCT10
	ED-NHS-191	PROTOTYPE IHX FABRICATION	215	05APR10	28JAN11
	ED-NHS-192	IHX LIFE PREDICTION AND TESTING	105	07FEB11	01JUL11
	ED-NHS-193	IHX CODE CASE	585	05OCT09	30DEC11
	ED-NHS-200	IHX - CERAMIC	2,088*	01OCT07	30SEP15
	ED-NHS-210	MATERIALS DEVELOPMENT & QUALIFICATION	520*	01OCT07	25SEP09
	ED-NHS-220	DEFINE REQUIREMENTS	0	01OCT07	
	ED-NHS-230	REVIEW EXISTING TECHNOLOGY	130	01OCT07	28MAR08
	ED-NHS-240	SELECT REFERENCE TECHNOLOGY VENDOR	0		28MAR08
	ED-NHS-250	DEVELOP MATERIALS PROPERTIES DATABASE	390*	31MAR08	25SEP09
	ED-NHS-260	MECHANICAL AND PHYSICAL PROPERTIES	390	31MAR08	25SEP09

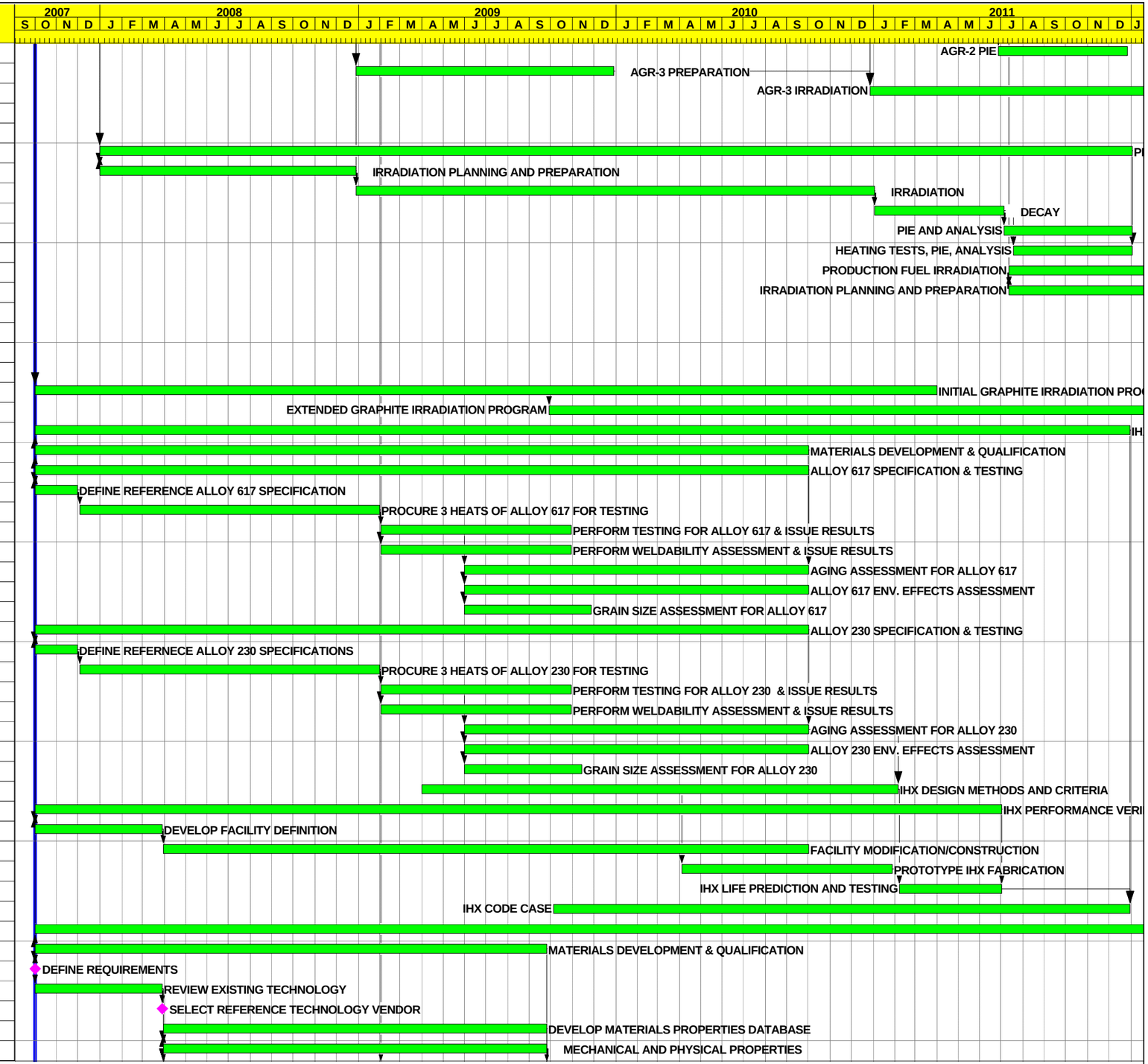

Start Date	01OCT07
Finish Date	09DEC16
Data Date	01OCT07
Run Date	18MAY07 14:03

Early Bar
Progress Bar
Critical Activity

NGPP

Sheet 3 of 7

NGNP PROJECT CONCEPTUAL DESIGN

Date	Revision	Checked	Approved

© Primavera Systems, Inc.

WBS	Activity ID	Activity Description	Orig Dur	Early Start	Early Finish
	ED-NHS-270	FRACTURE BEHAVIOR/WIEBULL STATISTICS DATA	390	31MAR08	25SEP09
	ED-NHS-280	HELIUM ENVIRONMENT COMPATIBILITY DATA	390	31MAR08	25SEP09
	ED-NHS-290	LONG-TERM ENVIRONMENT AGING TESTS	390	31MAR08	25SEP09
	ED-NHS-300	PREPARE & ISSUE DESIGN METHODS & CRITERIA	650	31MAR08	24SEP10
	ED-NHS-305	PERFORMANCE VERIFICATION	915	29MAR10	27SEP13
	ED-NHS-310	MANUFACTURING TECHNOLOGY ASSESSMENTS	650*	31MAR08	24SEP10
	ED-NHS-320	CERAMIC TO CERAMIC JOINTS	390	31MAR08	25SEP09
	ED-NHS-330	CERAMIC TO METAL JOINTS	390	31MAR08	25SEP09
	ED-NHS-335	HEADER/PIPING DEVELOPMENT	260	28SEP09	24SEP10
	ED-NHS-338	CODES AND STANDARDS	1,308	27SEP10	30SEP15
	ED-NHS-340	PRIMARY HTS HIGH TEMP DUCTS & INSULATION	522	31MAR08	30MAR10
2 22 HPF HYDROGEN PRODUCTION FACILITY					
	ED-HPF-100	PREPARE & ISSUE HPF R&D PLAN	66	01OCT07	31DEC07
	ED-HPF-110	BASIC DATA	420*	01OCT07	08MAY09
	ED-HPF-120	RESEARCH & DEVELOP THERMODYNAMIC DATA	240	01OCT07	29AUG08
	ED-HPF-130	RESEARCH & DEVELOP REACTION KINETICS DATA	240	01OCT07	29AUG08
	ED-HPF-140	PERFORM DATA ANALYSIS & ISSUE RESULTS	180	01SEP08	08MAY09
	ED-HPF-150	SUPPLEMENTARY MATERIALS	480	24NOV08	24SEP10
	ED-HPF-160	DECOMPOSER	1,485*	01OCT07	07JUN13
	ED-HPF-170	RESEARCH & DEVELOP CATALYST & ISSUE RESULTS	480	01OCT07	31JUL09
	ED-HPF-180	RESEARCH & DEVELOP CERAMIC & ISSUE RESULTS	240	01OCT07	29AUG08
	ED-HPF-182	R&D CERAMIC TO METAL BONDING	600	20APR09	05AUG11
	ED-HPF-190	RESEARCH & DEV. SEALING MATERIALS & ISSUE RESLTS	600	01OCT07	15JAN10
	ED-HPF-195	PILOT TESTING	480	08AUG11	07JUN13
	ED-HPF-200	PERFORM SULFURIC ACID CONCENTRATOR HETP TESTS	240	24NOV08	23OCT09
	ED-HPF-210	ELECTROLYZER	2,400*	01OCT07	09DEC16
	ED-HPF-220	PERFORM CATALYST LOADING TESTS & ISSUE RESULTS	480	01OCT07	31JUL09
	ED-HPF-230	RESEARCH & DEVELOP CELL MEMBRANE & ISSUE RESULTS	480	01OCT07	31JUL09
	ED-HPF-240	CELL DEVELOPMENT	360	03AUG09	17DEC10
	ED-HPF-250	PROTOTYPE CELL	360	20DEC10	04MAY12
	ED-HPF-260	PILOT CELL	360	07MAY12	20SEP13
	ED-HPF-270	PILOT PLANT	360	23SEP13	06FEB15
	ED-HPF-280	BUILD FULL-SCALE DEMO AT IDAHO	480	09FEB15	09DEC16
2 22 PCF POWER CONVERSION FACILITY					
	ED-PCF-100	STEAM GENERATORS	1,305*	01OCT07	28SEP12
	ED-PCF-110	PREPARE & ISSUE PCF R&D PLAN	66	01OCT07	31DEC07
	ED-PCF-120	REVIEW/REASSEMBLE EXISTING SG DEVELOPMENT DATA	262	01OCT07	30SEP08
	ED-PCF-130	PERFORM INLET FLOW DISTRIBUTION	739	01OCT08	01AUG11
	ED-PCF-140	PERFORM INSULATION VERIFICATION TESTING	523	01OCT08	01OCT10
	ED-PCF-150	PERFORM FRETTING & SLIDING WEAR PROTECTION TESTS	523	01OCT08	01OCT10
	ED-PCF-160	PERFORM TUBE WEAR PROTECTION DEVICE TESTING	978	01OCT08	29JUN12
	ED-PCF-170	PERFORM SHROUD SEAL TESTING	913	01OCT08	30MAR12
	ED-PCF-171	LEAD-IN/LEAD-OUT/TRANS./EXPANSION LOOP MOCKUPS	521	01OCT10	28SEP12
	ED-PCF-180	DEVELOP TUBING INSPECTION METHODS AND EQUIPMENT	783	01OCT08	30SEP11
TECHNOLOGY DEVELOPMENT					
	ED-TD-100	PREPARE TECHNOLOGY DEVELOPMENT SUMMARY REPORT	64	02FEB09*	30APR09
	ED-TD-110	ISSUE TECHNOLOGY DEVELOPMENT SUMMARY REPORT	0		30APR09
2 32 000 CONCEPTUAL DESIGN					
2 32 PSE	ED-CD-100	PLANT LEVEL DESIGN & INTEGRATION	392*	01OCT07	31MAR09
	ED-CD-110	CONCEPTUAL DESIGN FUTURE STUDIES	89*	01OCT07	31JAN08
	ED-CD-120	PREP & ISSUE STUDY C.1 HEAT APPLICATION ASSESS	66	01OCT07	31DEC07

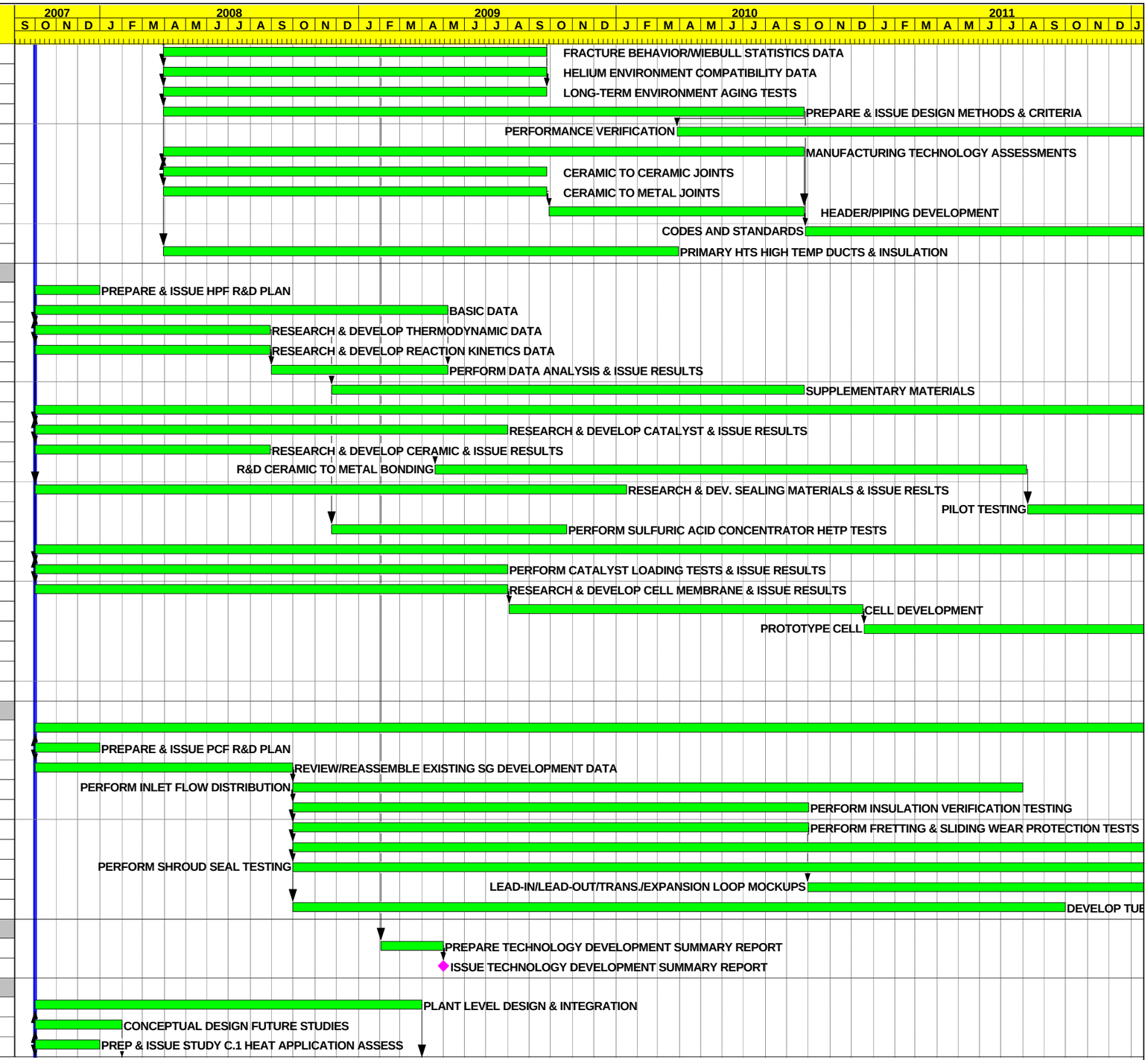

Start Date	01OCT07
Finish Date	09DEC16
Data Date	01OCT07
Run Date	18MAY07 14:03

Early Bar
Progress Bar
Critical Activity

© Primavera Systems, Inc.

NGPP

Sheet 4 of 7

NGNP PROJECT CONCEPTUAL DESIGN

Date	Revision	Checked	Approved

WBS	Activity ID	Activity Description	Orig Dur	Early Start	Early Finish
	ED-CD-130	PREP & ISSUE STUDY C.2 TOP LEVEL REQS & PLANS	66	01OCT07	31DEC07
	ED-CD-140	PREP & ISSUE STUDY C.3 INITIAL LICENSING EVENTS	89	01OCT07	31JAN08
	ED-CD-150	PREP & ISSUE STUDY C.7 VALUE ENGINEERING	89	01OCT07	31JAN08
	ED-CD-160	PREP & ISSUE STUDY C.9 CONSTRUCTION MODULARIZTN	89	01OCT07	31JAN08
	ED-CD-170	PREP & ISSUE STUDY C.12 MAJOR EQUIP TRANS & FAB	89	01OCT07	31JAN08
	ED-CD-180	PLANT LEVEL ENGINEERING	392*	01OCT07	31MAR09
	ED-CD-190	UPDATE PLANT LEVEL REQ AND FUNCTIONAL ANALYSIS	40	01OCT07	23NOV07
	ED-CD-200	DESIGN FOR NUCLEAR SAFETY ISSUE	20	12NOV07	07DEC07
	ED-CD-210	PERFORM PLANT LEVEL DESIGN & ISSUE DOCUMENTATION	59	01JAN08	21MAR08
	ED-CD-220	PERFORM HAZOP & ISSUE RESULTS	15	05MAR08	25MAR08
	ED-CD-230	DESIGN & ISSUE INFRASTRUCTURE (INCL FMECA) DOCS	39	01APR08	23MAY08
	ED-CD-240	PERFORM FUNCTIONAL AREAS REQS ANALYSIS/RESULTS	39	01APR08	23MAY08
	ED-CD-250	UPDATE DESIGN FOR NUCLEAR SAFETY	21	02JUN08	30JUN08
	ED-CD-260	PERFORM PLANT PRELIMINARY DESIGN REVIEW	23	01JUL08	31JUL08
	ED-CD-270	DESIGN & ISSUE PLANT CONCEPT LAYOUTS	44	02JUN08	31JUL08
	ED-CD-280	PERFORM CONCEPT DESIGN ANALYSIS & ISSUE RESULTS	25	01AUG08	04SEP08
	ED-CD-290	PERFORM HAZOP 2 & ISSUE RESULTS	11	01SEP08	15SEP08
	ED-CD-300	PLANT SYSTEM DESIGN REVIEW	13	15DEC08*	31DEC08
	ED-CD-310	PERFORM SEISMIC ANALYSIS & ISSUE RESULTS	64	01JAN09	31MAR09
	ED-CD-320	PLANT SAFETY & INVESTMENT PROTECTION ASSESSMENTS	392*	01OCT07	31MAR09
	ED-CD-330	DEVELOP INTERNAL EVENTS PRA MODEL	272	01NOV07*	14NOV08
	ED-CD-340	DEVELOP EXTERNAL EVENTS PRA MODEL	293	01NOV07	15DEC08
	ED-CD-350	PERFORM EVENT CONSEQUENCE ANALYSIS/RESULTS	195	03DEC07	29AUG08
	ED-CD-360	PERFORM RISK ANALYSIS & ISSUE RESULTS	185	16JUL08	31MAR09
	ED-CD-370	DESIGN & LICENSING SUPPORT & INTERFACE	370	01OCT07	27FEB09
	ED-CD-380	PRA PLANNING, INTEGRATION & REVIEW	392	01OCT07	31MAR09
	ED-CD-390	PREP REVISED NGNP PROJECT COST ESTIMATE REPORT	42	02FEB09	31MAR09
	ED-CD-400	ISSUE REVISED COST ESTIMATE REPORT	0		31MAR09
	ED-CD-410	PREP CONCEPTUAL DESIGN SUMMARY REPORT	42	02FEB09	31MAR09
	ED-CD-420	ISSUE PLANT LEVEL CONCEPTUAL DESIGN SUMMARY RPT	0		31MAR09
	ED-CD-430	OVERALL SITE & BOP	392*	01OCT07	31MAR09
	ED-CD-440	CONCEPTUAL DESIGN FUTURE STUDIES	89*	01OCT07	31JAN08
	ED-CD-450	PREPARE AND ISSUE STUDY C.5 PLANT LAYOUT	89	01OCT07	31JAN08
	ED-CD-460	PREP & ISSUE STUDY C.10 WASTEWTR TREATMENT OPT.	43	01NOV07	31DEC07
	ED-CD-470	GEOTECHNICAL	196*	24DEC07	22SEP08
	ED-CD-480	PERFORM GEOTECHNICAL INVESTIGATION/ISSUE RESULTS	175	24DEC07*	22AUG08
	ED-CD-490	PERFORM PROBABLISTIC SEISMIC HAZARD ANALYSIS	171	28JAN08	22SEP08
	ED-CD-500	PREPARE & ISSUE BUILDING REQUIREMENT DOCUMENTS	87	01JAN08	30APR08
	ED-CD-510	PREPARE & ISSUE CONCEPTUAL EQUIP & SYSTEM CALCS	392	01OCT07	31MAR09
	ED-CD-520	DESIGN & ISSUE PFDS AND UFDS	196	01JAN08	30SEP08
	ED-CD-530	DESIGN & ISSUE BUILDING LAYOUT DRAWINGS	185	01OCT07	13JUN08
	ED-CD-535	UPDATE & ISSUE REVISED PLOT PLAN	34	16JUN08	31JUL08
	ED-CD-540	PREPARE BOP CONCEPTUAL DESIGN SUMMARY REPORT	42	02FEB09	31MAR09
	ED-CD-550	ISSUE BOP CONCEPTUAL DESIGN SUMMARY REPORT	0		31MAR09
2 32 NHS	ED-CD-560	NUCLEAR HEAT SUPPLY FACILITY	392*	01OCT07	31MAR09
	ED-CD-570	PREP & ISSUE STUDY C.4 NHSS CONFIGURATION	110	01OCT07	29FEB08
	ED-CD-580	NHS ENGINEERING	282*	03MAR08	31MAR09
	ED-CD-585	NHS ENGINEERING INTEGRATION	65*	03MAR08	30MAY08
	ED-CD-590	PERFORM NHS REQS & FUNCTIONAL ANALYSIS/RESULTS	60	03MAR08	23MAY08
	ED-CD-600	DESIGN INTEGRATED HEAT GENERATION UNIT	30	21APR08	30MAY08
	ED-CD-610	DESIGN & ISSUE OF CRITICAL NHSS SYSTEMS	120	02JUN08	14NOV08

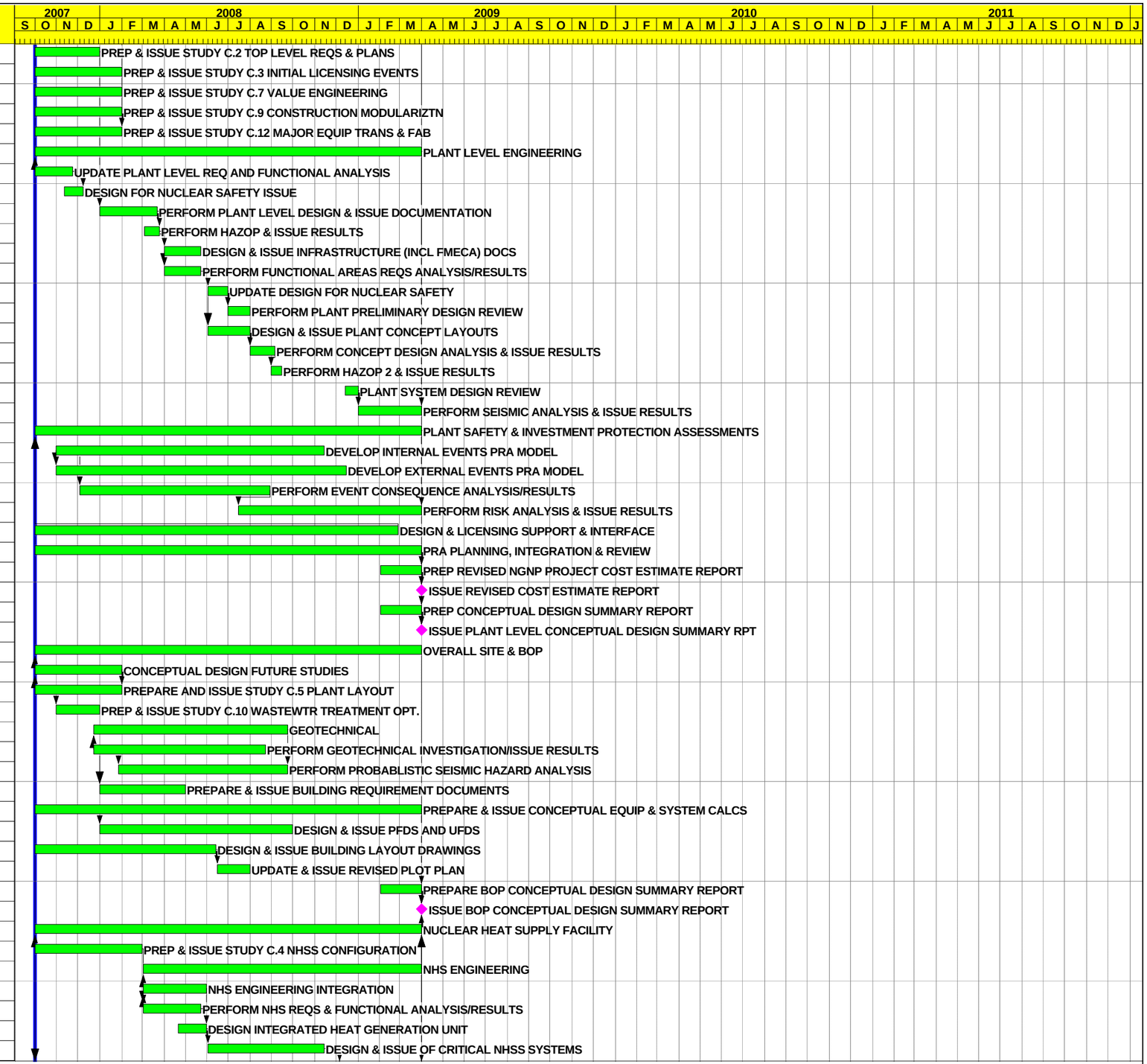

Start Date	01OCT07
Finish Date	09DEC16
Data Date	01OCT07
Run Date	18MAY07 14:03

Early Bar
Progress Bar
Critical Activity

© Primavera Systems, Inc.

NGPP

Sheet 5 of 7

NGNP PROJECT CONCEPTUAL DESIGN

Date	Revision	Checked	Approved

WBS	Activity ID	Activity Description	Orig Dur	Early Start	Early Finish
	ED-CD-620	DESIGN & ISSUE OF NHS ELECTRICAL SYSTEM	60	15SEP08	05DEC08
	ED-CD-630	DESIGN & ISSUE OF NHS CONTROL & INSTRUMENTATION	76	01SEP08	15DEC08
	ED-CD-640	DESIGN & ISSUE OF NHS SUPPORT SYSTEMS	328	01OCT07	31DEC08
	ED-CD-650	DESIGN & ISSUE NHS BUILDING	328	01OCT07	31DEC08
	ED-CD-660	PREPARE NHS CONCEPTUAL DESIGN SUMMARY REPORT	54	15JAN09	31MAR09
	ED-CD-670	ISSUE NHS CONCEPTUAL DESIGN SUMMARY REPORT	0		31MAR09
2 32 HPF	ED-CD-680	HYDROGEN PRODUCTION FACILITY	392*	01OCT07	31MAR09
	ED-CD-690	PLAN CONCEPTUAL DESIGN EFFORT	12	01OCT07	16OCT07
	ED-CD-700	PREP & ISSUE STUDY C.6 HYDROGEN PROCESS/MATL SEL	110	01OCT07	29FEB08
	ED-CD-720	PREPARE & ISSUE BASIC CONFIGURATION STUDIES	65*	03MAR08	30MAY08
	ED-CD-730	PREPARE & ISSUE PRODUCT SPECIFICATIONS	21	03MAR08	31MAR08
	ED-CD-740	OPTIMIZE OPERATING CONDITIONS & ISSUE RESULTS	27	03MAR08	08APR08
	ED-CD-750	OPTIMIZATION OF ACID STORAGE/LETDOWN & RESULTS	16	09APR08	30APR08
	ED-CD-760	PREPARE & ISSUE ELECTROLYZER STUDIES	44	01APR08	30MAY08
	ED-CD-770	OPTIMIZED ELECROLYZER/ABSORBER CONFIG	12	08MAY08	23MAY08
	ED-CD-780	ELECTROLYZER PURITY REQUIREMENTS	44	01APR08	30MAY08
	ED-CD-790	PREPARE & ISSUE DECOMPOSER STUDIES	33*	17MAR08	30APR08
	ED-CD-800	PRELIMINARY CONFIGURATION STUDY	11	17MAR08	31MAR08
	ED-CD-810	INTEGRATION MEETING	0		31MAR08
	ED-CD-820	DEVELOP CONCEEPTUAL CONFIGURATION & ISSUE RESULT	22	01APR08	30APR08
	ED-CD-830	HPF ENGINEERING	163*	16APR08	28NOV08
	ED-CD-840	PERFORM PCF REQS & FUNCTIONAL ANALYSIS/RESULTS	38	16APR08	06JUN08
	ED-CD-850	PREP & ISSUE DESIGN BASIS, FLOW DIA, & M&E BAL	21	15MAY08	12JUN08
	ED-CD-860	PREP & ISSUE MATERIALS&DESIGN COND FOR FLOW SHT	9	13JUN08	25JUN08
	ED-CD-870	PREP & ISSUE PRELIM PROCESS HAZARD ASSESSMENT	3	26JUN08	30JUN08
	ED-CD-880	PREP & ISSUE EQUIP LIST AND PROCESS DATA SHEETS	53	13JUN08	26AUG08
	ED-CD-890	PREP & ISSUE ELECTROLYZER/DECOMPOSER DRAWINGS	14	13JUN08	02JUL08
	ED-CD-900	PREP & ISSUE P&IDS (PRELIM & KEY SYSTEMS ONLY)	50	27AUG08	04NOV08
	ED-CD-910	PREP & ISSUE INS DATA, ENG NOTES, OPER GUIDELINE	17	23OCT08	14NOV08
	ED-CD-920	PREP & ISSUE PRELIM HAZOPS & FMEA (SELECT SYS)	24	28OCT08	28NOV08
	ED-CD-930	PREP & ISSUE SAFETY REVISIONS	14	01DEC08	18DEC08
	ED-CD-940	PIPING AND MECHANICAL STUDIES	42*	24NOV08	20JAN09
	ED-CD-950	DESIGN ISSUE DECOMPOSER ARRANGEMENT & PLOT	14	24NOV08	11DEC08
	ED-CD-960	INTEGRATION MEETING	3	10DEC08	12DEC08
	ED-CD-970	FINALIZE & ISSUE DECOMPOSER ARRANGMENT & PLOT	14	01JAN09	20JAN09
2 32 PM2	ED-PM-100	PROJECT MANAGEMENT	392*	01OCT07	31MAR09
	ED-RD-100	ISSUE R&D PLAN REVISION	22	22SEP08*	21OCT08
	ED-RD-110	DEVELOP & ISSUE ESTIMATE	8	21JAN09	30JAN09
	ED-RD-120	DEVELOP & ISSUE SCHEDULE	8	21JAN09	30JAN09
	ED-RD-130	PREPARE & ISSUE PRELIM DESIGN PLAN	33	15SEP08	29OCT08
	ED-RD-140	PREPARE HPF CONCEPTUAL DESIGN SUMMARY REPORT	50	21JAN09	31MAR09
	ED-RD-150	ISSUE HPF CONCEPTUAL DESIGN SUMMARY REPORT	0		31MAR09
	ED-RD-160	CONDUCT ENGINEERING SUPPORT DURING R&D	392	01OCT07	31MAR09
2 32 PCF	ED-RD-170	POWER CONVERSION FACILITY	392*	01OCT07	31MAR09
	ED-RD-180	PREP & ISSUE STUDY C.11 STEAM GENERATOR DESIGN	89	01OCT07	31JAN08
	ED-RD-190	ENGINEERING STUDIES	107*	01FEB08	30JUN08
	ED-RD-200	PERFORM & ISSUE PCS OPTIMIZATION RESULTS	107	01FEB08	30JUN08
	ED-RD-210	PERFORM & ISSUE PCS DESIGN BASIS TRANSIENT ASSMT	86	01FEB08	30MAY08
	ED-RD-220	PCF ENGINEERING	288*	22FEB08	31MAR09
	ED-RD-230	PERFORM PCF REQS & FUNCTIONAL ANALYSIS/RESULTS	35	22FEB08	10APR08
	ED-RD-240	PREP & ISSUE PCF SYSTEM REQUIREMENTS DOCUMENTS	89	18APR08	20AUG08

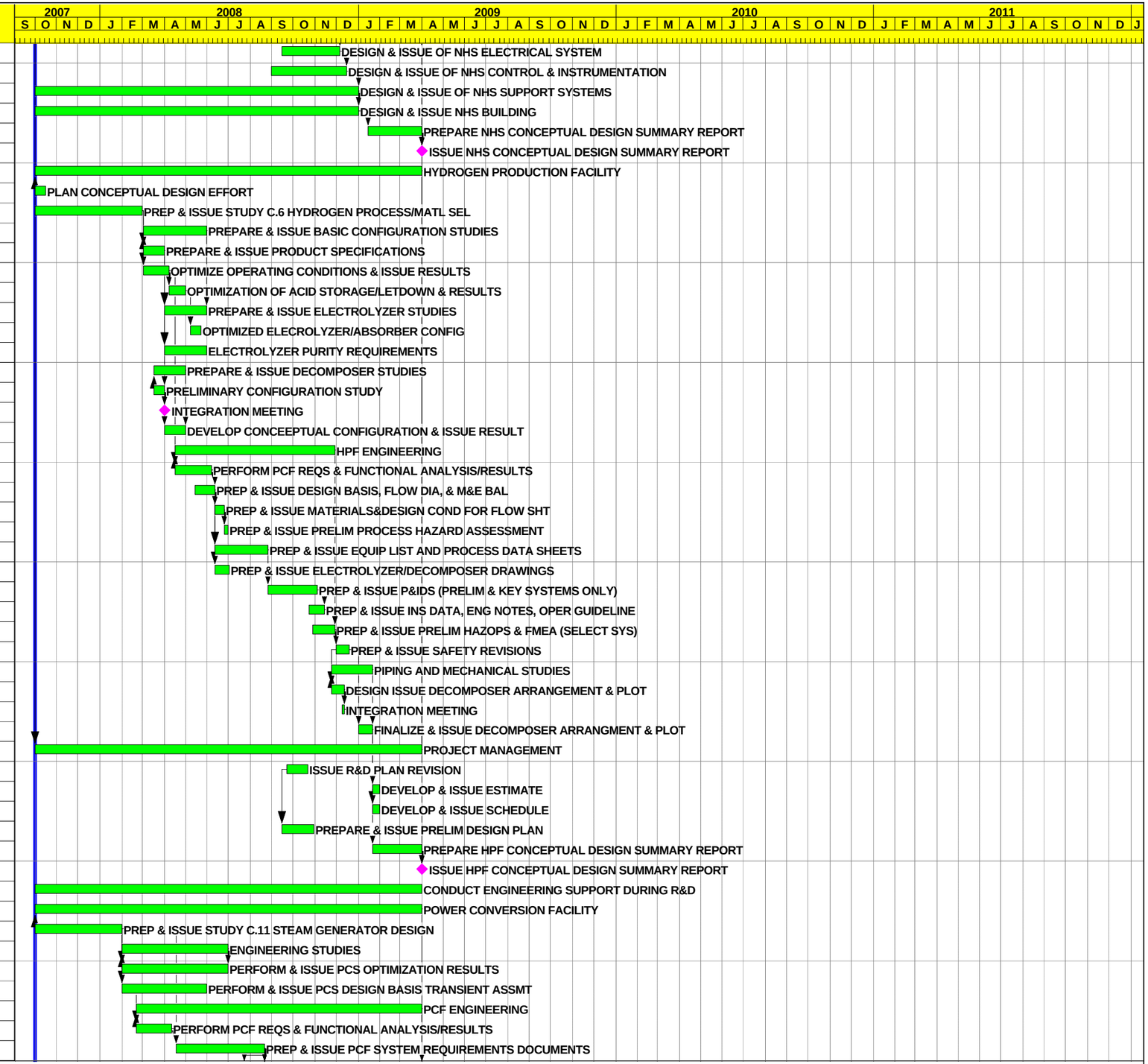

Start Date	01OCT07	Early Bar	
Finish Date	09DEC16	Progress Bar	
Data Date	01OCT07	Critical Activity	
Run Date	18MAY07 14:03		

© Primavera Systems, Inc.

NGPP

Sheet 6 of 7

NGNP PROJECT CONCEPTUAL DESIGN

Date	Revision	Checked	Approved

WBS	Activity ID	Activity Description	Orig Dur	Early Start	Early Finish
	ED-RD-250	PREP & ISSUE STEAM GENERATOR REQUIREMENT DOCS	67	24JUL08	24OCT08
	ED-RD-260	PREP & ISSUE STEAM GENERATOR PERFORMANCE SPEC	58	20OCT08	07JAN09
	ED-RD-270	DESIGN & ISSUE STEAM GENERATOR AREA LAYOUT/DWGS	27	06OCT08	11NOV08
	ED-RD-280	PREP & ISSUE STG REQUIREMENT DOCUMENT	67	21AUG08	21NOV08
	ED-RD-290	PREP & ISSUE STG PERFORMANCE SPEC	67	12NOV08	12FEB09
	ED-RD-300	DESIGN & ISSUE STG AREA LAYOUT & DRAWINGS	44	12NOV08	12JAN09
	ED-RD-310	PREP & ISSUE AIR COOLED CONDENSER REQ. DOCUMENT	45	24NOV08	23JAN09
	ED-RD-320	PREP & ISSUE AIR COOLED CONDENSER PERF SPEC	67	21AUG08	21NOV08
	ED-RD-330	DESIGN & ISSUE AIR COOLED CONDENSER LAYOUT/DWGS	44	29JAN09	31MAR09
	ED-RD-340	PREP & ISSUE STG BUILDING REQUIREMENT DOCUMENTS	82	21AUG08	12DEC08
	ED-RD-350	PREP & ISSUE SG BUILDING REQUIREMENT DOCUMENT	83	21AUG08	15DEC08
	ED-RD-360	PREPARE PCF CONCEPTUAL DESIGN SUMMARY REPORT	44	29JAN09	31MAR09
	ED-RD-370	ISSUE PCF CONCEPTUAL DESIGN SUMMARY REPORT	0		31MAR09

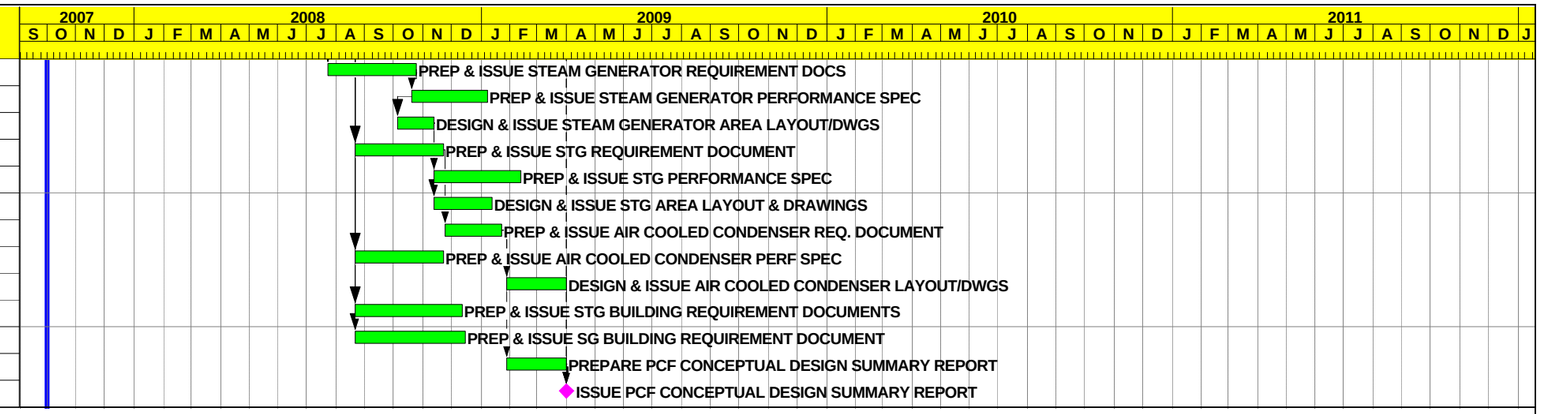

Start Date	01OCT07
Finish Date	09DEC16
Data Date	01OCT07
Run Date	18MAY07 14:03

Early Bar
Progress Bar
Critical Activity

© Primavera Systems, Inc.

NGPP

NGNP PROJECT CONCEPTUAL DESIGN

Date	Revision	Checked	Approved

WBS	Activity ID	Activity Description	Orig Dur	Early Start	Early Finish	Predecessors	Successors
REFERENCE BASELINES							
	RB-1000	PRE-PRODUCTION FUEL AVAILABLE FROM PBMR ACF	0		15JAN08*		ED-NHS-103, ED-NHS-115
	RB-2000	PRODUCTION FUEL AVAILABLE	0		11JUL12*		ED-NHS-11B*, ED-NHS-11C*
PROGRAMMATIC ACTIVITIES							
CONCEPTUAL DESIGN FUTURE STUDIES							
	PA-CD-100	PREP & ISSUE STUDY C.8 COLA PRE-APP. STRATEGY	89	01OCT07	31JAN08		PA-LP-120*
PREPARE OR REVIEW THE CONCEPTUAL DESIGN PLAN							
	PA-CD-110	PREPARE SCOPE	23	02FEB09	04MAR09	PA-SS-100*	
	PA-CD-120	SCHEDULE DEVELOPMENT	45	02FEB09	03APR09	PA-SS-100*	PA-CD-130*
	PA-CD-130	BUDGET DEVELOPMENT	45	02FEB09	03APR09	PA-CD-120*	PA-CD-140*
	PA-CD-140	BEA APPROVAL OF THE PLAN	21	06APR09	04MAY09	PA-CD-130*	
35% DESIGN REVIEW INCLUDING VALUE ENGINEERING							
	PA-35-100	35% DESIGN REVIEW INCLUDING VALUE ENGINEERING	44*	31MAR08	29MAY08	PA-35-110*	PA-35-130*
	PA-35-110	SUBMIT PACKAGE TO BEA	0	31MAR08*			PA-35-100*, PA-35-112*, PA-35-115*, PA-35-117*
	PA-35-112	FUTURE STUDIES	1	31MAR08	31MAR08	PA-35-110*	
	PA-35-115	TL USER REQUIREMENTS	1	31MAR08	31MAR08	PA-35-110*	
	PA-35-117	PD&I OUTPUT	1	31MAR08	31MAR08	PA-35-110*	
	PA-35-120	REVIEW MEETING	0	15APR08*			PA-35-130*
	PA-35-130	INCORPORATE COMMENTS	33	15APR08	29MAY08	PA-35-100*, PA-35-120*	
90% DESIGN REVIEW INCLUDING VALUE ENGINEERING							
	PA-90-100	90% DESIGN REVIEW INCLUDING VALUE ENGINEERING	42*	30JAN09	30MAR09	PA-90-110*	PA-90-130*
	PA-90-110	SUBMIT PACKAGE TO BEA	0	30JAN09*			PA-90-100*, PA-90-110A*, PA-90-110B*, PA-90-110C*,
	PA-90-110A	ADDITIONAL STUDIES	1	30JAN09	30JAN09	PA-90-110*	
	PA-90-110B	TL PLANT REQUIREMENTS	1	30JAN09	30JAN09	PA-90-110*	
	PA-90-110C	PD&I OUTPUT	1	30JAN09	30JAN09	PA-90-110*	
	PA-90-110D	MAJOR SDDs INCLUDING P&IDS	1	30JAN09	30JAN09	PA-90-110*	
	PA-90-110E	PRELIMINARY INTEGRATED SAFETY ASSESSMENT	1	30JAN09	30JAN09	PA-90-110*	
	PA-90-110F	R&D PLAN UPDATE	1	30JAN09	30JAN09	PA-90-110*	
	PA-90-110G	REGULATORY MANAGEMENT PLAN UPDATE	1	30JAN09	30JAN09	PA-90-110*	
	PA-90-110H	NGNP SCHEDULE UPDATE	1	30JAN09	30JAN09	PA-90-110*	
	PA-90-110I	BUDGET COST ESTIMATE	1	30JAN09	30JAN09	PA-90-110*	
	PA-90-110J	PMP UPDATE	1	30JAN09	30JAN09	PA-90-110*	
	PA-90-110K	PLAN FOR PRELIMINARY DESIGN	1	30JAN09	30JAN09	PA-90-110*	
	PA-90-110L	CONSTRUCTABILITY REVIEW REPORT	1	30JAN09	30JAN09	PA-90-110*	
	PA-90-120	REVIEW MEETING	0	27FEB09*			PA-90-130*
	PA-90-130	INCORPORATE COMMENTS	22	27FEB09	30MAR09	PA-90-100*, PA-90-120*	
PLANS & PROCEDURES							
	PA-PP-100	PROJECT MANAGEMENT PLAN	89*	02FEB09	04JUN09	PA-PP-110*	PA-PP-150*
	PA-PP-110	PREPARATION	45	02FEB09	03APR09	PA-SS-100*	PA-PP-100*, PA-PP-120*
	PA-PP-120	ISSUE DRAFT	0		03APR09	PA-PP-110*	PA-PP-130*
	PA-PP-130	BEA REVIEW	21	06APR09	04MAY09	PA-PP-120*	PA-PP-140*
	PA-PP-140	INCORPORATE COMMENTS	23	05MAY09	04JUN09	PA-PP-130*	PA-PP-150*
	PA-PP-150	ISSUE FINAL	0		04JUN09	PA-PP-100*, PA-PP-140*	
	PA-PP-160	QUALITY ASSURANCE PLAN	89*	02FEB09	04JUN09	PA-PP-170*	PA-PP-210*
	PA-PP-170	PREPARATION	45	02FEB09	03APR09	PA-SS-100*	PA-PP-160*, PA-PP-180*
	PA-PP-180	ISSUE DRAFT	0		03APR09	PA-PP-170*	PA-PP-190*
	PA-PP-190	BEA REVIEW	21	06APR09	04MAY09	PA-PP-180*	PA-PP-200*
	PA-PP-200	INCORPORATE COMMENTS	23	05MAY09	04JUN09	PA-PP-190*	PA-PP-210*
	PA-PP-210	ISSUE FINAL	0		04JUN09	PA-PP-160*, PA-PP-200*	
	PA-PP-220	ENGINEERING PROCEDURES	66*	02FEB09	04MAY09	PA-PP-230*	PA-PP-240*

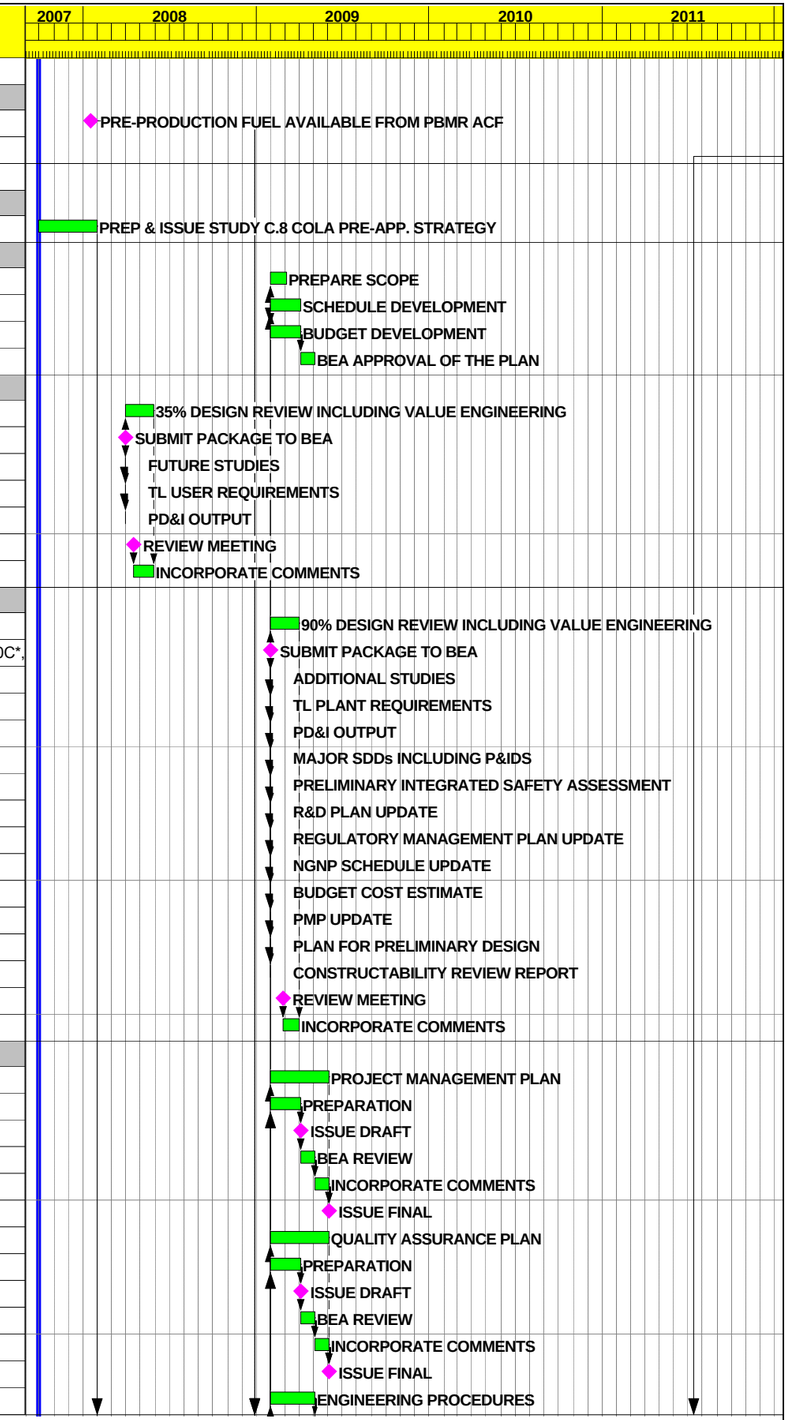

Start Date	01OCT07
Finish Date	09DEC16
Data Date	01OCT07
Run Date	18MAY07 14:08

Early Bar
Progress Bar
Critical Activity

NGPP

Sheet 1 of 7

NGNP PROJECT CONCEPTUAL DESIGN

Date	Revision	Checked	Approved

© Primavera Systems, Inc.

WBS	Activity ID	Activity Description	Orig Dur	Early Start	Early Finish	Predecessors	Successors
	PA-PP-230	PREPARE DOCUMENTS	66	02FEB09	04MAY09	PA-SS-100*	PA-PP-220*, PA-PP-240*
	PA-PP-240	ISSUE DOCUMENTS	0		04MAY09	PA-PP-220*, PA-PP-230*	
	PA-PP-250	REGULATORY MANAGEMENT PLAN	328*	01OCT07	31DEC08	PA-PP-260*	PA-PP-300*
	PA-PP-260	PREPARATION & PLANNING	196*	01OCT07	30JUN08	PA-PP-260A*	PA-PP-250*, PA-PP-260B*
	PA-PP-260A	Plan schedule and LRB contents with DOE	89	01OCT07	31JAN08		PA-PP-260*, PA-PP-260B*, PA-PP-265A*
	PA-PP-260B	Establish schedule and LRB contents with NRC	107	01FEB08	30JUN08	PA-PP-260*, PA-PP-260A*	
	PA-PP-265	Outline LRB Document	217*	03DEC07	30SEP08	PA-PP-265A*	PA-PP-265E*
	PA-PP-265A	Administrative Issues	195	03DEC07	29AUG08	PA-PP-260A*	PA-PP-265*, PA-PP-265B*, PA-PP-265C*,
	PA-PP-265B	ESP and COL application contents	162	03DEC07	15JUL08	PA-PP-265A*	
	PA-PP-265C	PBMR topical and technical issue applicability	162	03DEC07	15JUL08	PA-PP-265A*	
	PA-PP-265D	NGNP-specific issues	131	01APR08	30SEP08	PA-PP-265A*	PA-PP-265E*, PA-PP-270A*
	PA-PP-265E	Establish NRC R&D needs	131	01APR08	30SEP08	PA-LP-150, PA-PP-265*, PA-PP-265D*	ED-TD-100
	PA-PP-268	Prepare Environmental Permitting Compliance Plan	66*	01NOV07	31JAN08	PA-PP-268A*	PA-PP-268D*
	PA-PP-268A	Revise Pre-conceptual Env. Permitting Plan	22	01NOV07*	30NOV07		PA-PP-268*, PA-PP-268C*
	PA-PP-268C	Document Environmental Compliance Basis	21	03DEC07	31DEC07	PA-PP-268A*	PA-PP-268D*
	PA-PP-268D	Draft State & Local permits section - COL Env.	23	01JAN08	31JAN08	PA-PP-268*, PA-PP-268C*	
	PA-PP-270	ISSUE DRAFT	131*	01APR08	30SEP08	PA-PP-270A*	PA-PP-270C*
	PA-PP-270A	Annotated outline	55	01APR08	16JUN08	PA-PP-265D*	PA-PP-270*, PA-PP-270B*
	PA-PP-270B	Draft for internal review	44	17JUN08	15AUG08	PA-PP-270A*	PA-PP-270C*
	PA-PP-270C	Final internal draft	32	18AUG08	30SEP08	PA-PP-270*, PA-PP-270B*	PA-PP-280*
	PA-PP-280	BEA REVIEW	23	01OCT08	31OCT08	PA-PP-270C*	PA-PP-290*
	PA-PP-290	INCORPORATE COMMENTS	20	03NOV08	28NOV08	PA-PP-280*	PA-PP-300*
	PA-PP-300	ISSUE FINAL	23	01DEC08	31DEC08	PA-PP-250*, PA-PP-290*	
	PA-PP-310	PROBABILITY RISK ASSESSMENT PLAN	66*	02FEB09	04MAY09	PA-PP-320*	PA-PP-330*
	PA-PP-320	PREPARE PLAN	66	02FEB09	04MAY09	PA-SS-100*	PA-PP-310*, PA-PP-330*
	PA-PP-330	ISSUE PLAN	0		04MAY09	PA-PP-310*, PA-PP-320*	
	PA-PP-340	SYSTEMS ENGINEERING PLAN	66*	02FEB09	04MAY09	PA-PP-350*	PA-PP-360*
	PA-PP-350	PREPARE PLAN	66	02FEB09	04MAY09	PA-SS-100*	PA-PP-340*, PA-PP-360*
	PA-PP-360	ISSUE PLAN	0		04MAY09	PA-PP-340*, PA-PP-350*	
	PA-PP-370	CAD/CAE PLAN	66*	02FEB09	04MAY09	PA-PP-380*	PA-PP-390*
	PA-PP-380	PREPARE PLAN	66	02FEB09	04MAY09	PA-SS-100*	PA-PP-370*, PA-PP-390*
	PA-PP-390	ISSUE PLAN	0		04MAY09	PA-PP-370*, PA-PP-380*	
SCHEDULE							
	PA-SS-100	PREPARE REVISED NGNP PROJECT SCHEDULE	42	02FEB09*	31MAR09		PA-CD-110*, PA-CD-120*, PA-PP-110*, PA-PP-170*,
	PA-SS-110	ISSUE REVISED SCHEDULE	0		31MAR09	PA-SS-100*	
2 41 000 LICENSING & PERMITTING TO CONSTRUCT							
2 41 NRC	PA-LP-100	NRC LICENSING	1	01OCT07	01OCT07		
	PA-LP-110	PREAPPLICATION INTERACTIONS WITH NRC	370	01OCT07	27FEB09		
	PA-LP-120	REGULATORY MANAGEMENT PLAN BRIEFING WITH NRC	0	01FEB08		PA-CD-100*	
	PA-LP-130	NGNP DESIGN FAMILIARIZATION BRIEFING WITH NRC	0	01APR08*			
	PA-LP-140	BRIEFING WITH NRC ON 500 MWth CAPABILITY	0	01JUL08*			
	PA-LP-150	BRIEFING WITH NRC ON REGULATORY TECHNOLOGY DEV.	0	01SEP08*			PA-PP-265E
	PA-LP-160	BRIEFING WITH NRC ON APPROACH TO HYDROGEN HAZARD	0	28NOV08*			
	PA-LP-170	BRIEFING WITH NRC ON APP. TO IHX ROLE	0	27FEB09*			
TECHNOLOGY DEVELOPMENT & ENGINEERING/DESIGN							
2 22 NHS NUCLEAR HEAT SUPPLY FACILITY							
	ED-NHS-100	PREPARE & ISSUE NHS R&D PLAN (EXC. FUEL & GRPHT)	66	01OCT07	31DEC07		ED-NHS-102*, ED-NHS-110, ED-NHS-112*,
	ED-NHS-101	PIGGY BACK IRRADIATION	1,560*	01JAN08	23DEC13	ED-NHS-102*	ED-NHS-109*
	ED-NHS-102	AGR-2 PREPARATION	260	01JAN08	29DEC08	ED-NHS-100*	ED-NHS-101*, ED-NHS-103*, ED-NHS-106*
	ED-NHS-103	AGR-2 IRRADIATION	520	30DEC08	27DEC10	ED-NHS-102*, RB-1000	ED-NHS-104*, ED-NHS-107*
	ED-NHS-104	AGR-2 DECAY	130	28DEC10	27JUN11	ED-NHS-103*	ED-NHS-105*

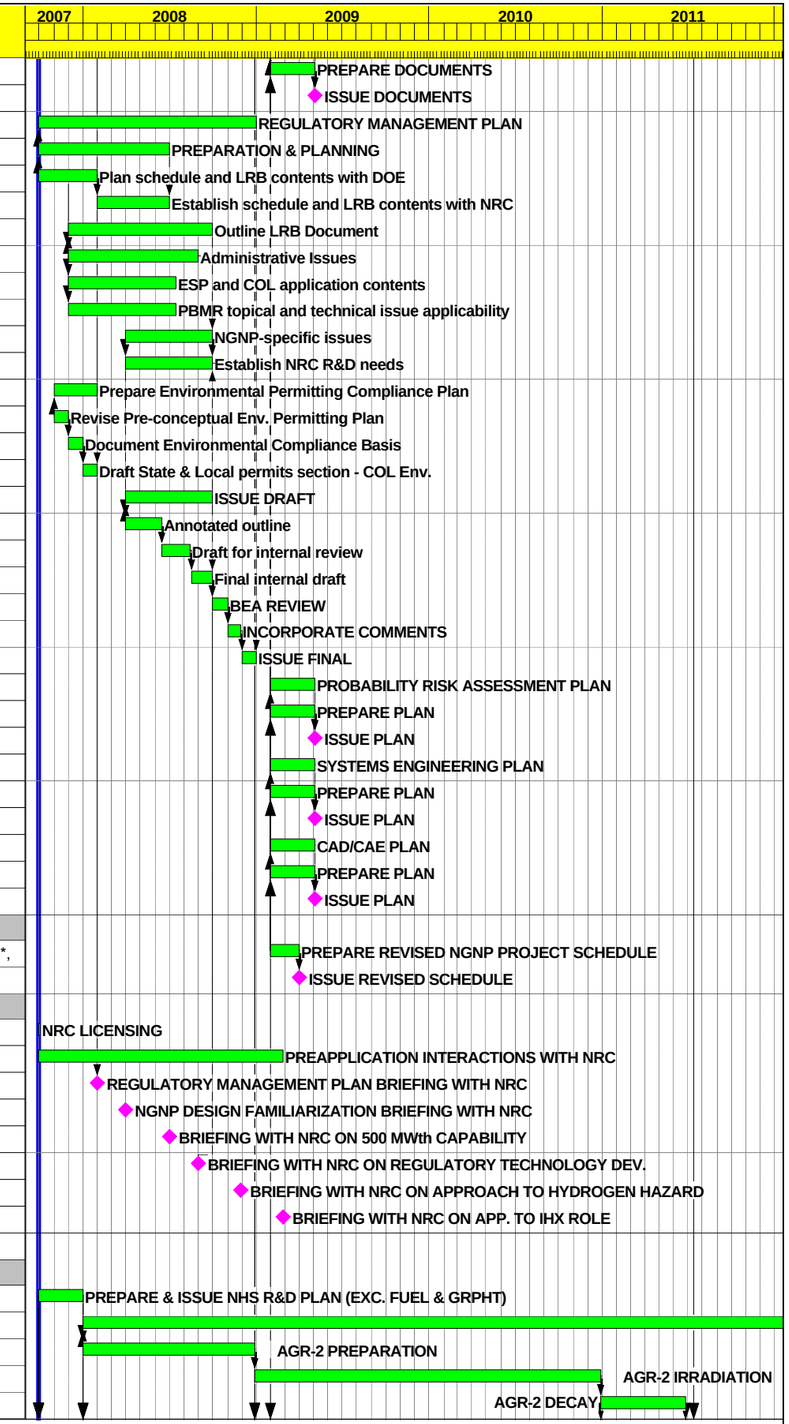

Start Date	01OCT07
Finish Date	09DEC16
Data Date	01OCT07
Run Date	18MAY07 14:08

Early Bar
Progress Bar
Critical Activity

NGPP

Sheet 2 of 7

NGNP PROJECT CONCEPTUAL DESIGN

Date	Revision	Checked	Approved

© Primavera Systems, Inc.

WBS	Activity ID	Activity Description	Orig Dur	Early Start	Early Finish	Predecessors	Successors
	ED-NHS-105	AGR-2 PIE	130	28JUN11	26DEC11	ED-NHS-104*	
	ED-NHS-106	AGR-3 PREPARATION	260	30DEC08	28DEC09	ED-NHS-102*	ED-NHS-107
	ED-NHS-107	AGR-3 IRRADIATION	520	28DEC10	24DEC12	ED-NHS-103*, ED-NHS-106	ED-NHS-108*
	ED-NHS-108	AGR-3 DECAY	130	25DEC12	24JUN13	ED-NHS-107*	ED-NHS-109*
	ED-NHS-109	AGR-3 PIE	130	25JUN13	23DEC13	ED-NHS-101*, ED-NHS-108*	
	ED-NHS-110	PRE - PRODUCTION FUEL IRRADIATION PROGRAM	1,045*	01JAN08	02JAN12	ED-NHS-100, ED-NHS-112*	ED-NHS-118*
	ED-NHS-112	IRRADIATION PLANNING AND PREPARATION	260	01JAN08	29DEC08	ED-NHS-100*	ED-NHS-110*, ED-NHS-115*
	ED-NHS-115	IRRADIATION	525	30DEC08	03JAN11	ED-NHS-112*, RB-1000	ED-NHS-116*
	ED-NHS-116	DECAY	130	04JAN11	04JUL11	ED-NHS-115*	ED-NHS-117*, ED-NHS-118
	ED-NHS-117	PIE AND ANALYSIS	130	05JUL11	02JAN12	ED-NHS-116*	ED-NHS-118*
	ED-NHS-118	HEATING TESTS, PIE, ANALYSIS	120	19JUL11	02JAN12	ED-NHS-110*, ED-NHS-116, ED-NHS-117*	
	ED-NHS-11A	PRODUCTION FUEL IRRADIATION	1,045*	13JUL11	14JUL15	ED-NHS-11B*	ED-NHS-11F*
	ED-NHS-11B	IRRADIATION PLANNING AND PREPARATION	260	13JUL11	10JUL12	RB-2000*	ED-NHS-11A*, ED-NHS-11C
	ED-NHS-11C	IRRADIATION	524	12JUL12	15JUL14	ED-NHS-11B, RB-2000*	ED-NHS-11D*
	ED-NHS-11D	DECAY	130	16JUL14	13JAN15	ED-NHS-11C*	ED-NHS-11E*, ED-NHS-11F
	ED-NHS-11E	PIE AND ANALYSIS	130	14JAN15	14JUL15	ED-NHS-11D*	ED-NHS-11F*
	ED-NHS-11F	HEATING TESTS, PIE, ANALYSIS	120	28JAN15	14JUL15	ED-NHS-11A*, ED-NHS-11D, ED-NHS-11E*	
	ED-NHS-120	INITIAL GRAPHITE IRRADIATION PROGRAM	915	01OCT07	01APR11	ED-NHS-100*	ED-NHS-121*
	ED-NHS-121	EXTENDED GRAPHITE IRRADIATION PROGRAM	1,307	28SEP09	30SEP14	ED-NHS-120*	
	ED-NHS-130	IHX - METALLIC	1,110*	01OCT07	30DEC11	ED-NHS-140*	ED-NHS-193*
	ED-NHS-140	MATERIALS DEVELOPMENT & QUALIFICATION	785*	01OCT07	01OCT10	ED-NHS-150*	ED-NHS-130*, ED-NHS-155*
	ED-NHS-150	ALLOY 617 SPECIFICATION & TESTING	785*	01OCT07	01OCT10	ED-NHS-151*	ED-NHS-140*, ED-NHS-155*
	ED-NHS-151	DEFINE REFERENCE ALLOY 617 SPECIFICATION	45	01OCT07	30NOV07	ED-NHS-100*	ED-NHS-150*, ED-NHS-152*
	ED-NHS-152	PROCURE 3 HEATS OF ALLOY 617 FOR TESTING	305	03DEC07	30JAN09	ED-NHS-151*	ED-NHS-153*, ED-NHS-154*
	ED-NHS-153	PERFORM TESTING FOR ALLOY 617 & ISSUE RESULTS	195	02FEB09	30OCT09	ED-NHS-152*	ED-NHS-155*
	ED-NHS-154	PERFORM WELDABILITY ASSESSMENT & ISSUE RESULTS	195	02FEB09	30OCT09	ED-NHS-152*	
	ED-NHS-155	AGING ASSESSMENT FOR ALLOY 617	350	01JUN09	01OCT10	ED-NHS-140*, ED-NHS-150*, ED-NHS-153*	ED-NHS-156*, ED-NHS-157*
	ED-NHS-156	ALLOY 617 ENV. EFFECTS ASSESSMENT	350	01JUN09	01OCT10	ED-NHS-155*	
	ED-NHS-157	GRAIN SIZE ASSESSMENT FOR ALLOY 617	130	01JUN09	27NOV09	ED-NHS-155*	
	ED-NHS-160	ALLOY 230 SPECIFICATION & TESTING	785*	01OCT07	01OCT10	ED-NHS-161*	ED-NHS-165*
	ED-NHS-161	DEFINE REFERNECE ALLOY 230 SPECIFICATIONS	45	01OCT07	30NOV07	ED-NHS-100*	ED-NHS-160*, ED-NHS-162*
	ED-NHS-162	PROCURE 3 HEATS OF ALLOY 230 FOR TESTING	305	03DEC07	30JAN09	ED-NHS-161*	ED-NHS-163*, ED-NHS-164*
	ED-NHS-163	PERFORM TESTING FOR ALLOY 230 & ISSUE RESULTS	195	02FEB09	30OCT09	ED-NHS-162*	ED-NHS-165*
	ED-NHS-164	PERFORM WELDABILITY ASSESSMENT & ISSUE RESULTS	195	02FEB09	30OCT09	ED-NHS-162*	
	ED-NHS-165	AGING ASSESSMENT FOR ALLOY 230	350	01JUN09	01OCT10	ED-NHS-160*, ED-NHS-163*	ED-NHS-166*, ED-NHS-167*, ED-NHS-168*
	ED-NHS-166	ALLOY 230 ENV. EFFECTS ASSESSMENT	350	01JUN09	01OCT10	ED-NHS-165*	
	ED-NHS-167	GRAIN SIZE ASSESSMENT FOR ALLOY 230	120	01JUN09	13NOV09	ED-NHS-165*	
	ED-NHS-168	IHX DESIGN METHODS AND CRITERIA	483	01APR09	04FEB11	ED-NHS-165*	ED-NHS-191*, ED-NHS-192*
	ED-NHS-170	IHX PERFORMANCE VERIFICATION	980*	01OCT07	01JUL11	ED-NHS-180*	ED-NHS-192*
	ED-NHS-180	DEVELOP FACILITY DEFINITION	130	01OCT07	28MAR08	ED-NHS-100*	ED-NHS-170*, ED-NHS-190*
	ED-NHS-190	FACILITY MODIFICATION/CONSTRUCTION	655	31MAR08	01OCT10	ED-NHS-180*	
	ED-NHS-191	PROTOTYPE IHX FABRICATION	215	05APR10	28JAN11	ED-NHS-168*	ED-NHS-192
	ED-NHS-192	IHX LIFE PREDICTION AND TESTING	105	07FEB11	01JUL11	ED-NHS-168*, ED-NHS-170*, ED-NHS-191	ED-NHS-193*
	ED-NHS-193	IHX CODE CASE	585	05OCT09	30DEC11	ED-NHS-130*, ED-NHS-192*	
	ED-NHS-200	IHX - CERAMIC	2,088*	01OCT07	30SEP15	ED-NHS-220*	ED-NHS-338*
	ED-NHS-210	MATERIALS DEVELOPMENT & QUALIFICATION	520*	01OCT07	25SEP09	ED-NHS-220*	ED-NHS-290*
	ED-NHS-220	DEFINE REQUIREMENTS	0	01OCT07		ED-NHS-100*	ED-NHS-200*, ED-NHS-210*, ED-NHS-230*
	ED-NHS-230	REVIEW EXISTING TECHNOLOGY	130	01OCT07	28MAR08	ED-NHS-220*	ED-NHS-240*, ED-NHS-300*
	ED-NHS-240	SELECT REFERENCE TECHNOLOGY VENDOR	0		28MAR08	ED-NHS-230*	ED-NHS-260*, ED-NHS-270*, ED-NHS-280*,
	ED-NHS-250	DEVELOP MATERIALS PROPERTIES DATABASE	390*	31MAR08	25SEP09	ED-NHS-260*	ED-NHS-290*
	ED-NHS-260	MECHANICAL AND PHYSICAL PROPERTIES	390	31MAR08	25SEP09	ED-NHS-240*	ED-NHS-250*

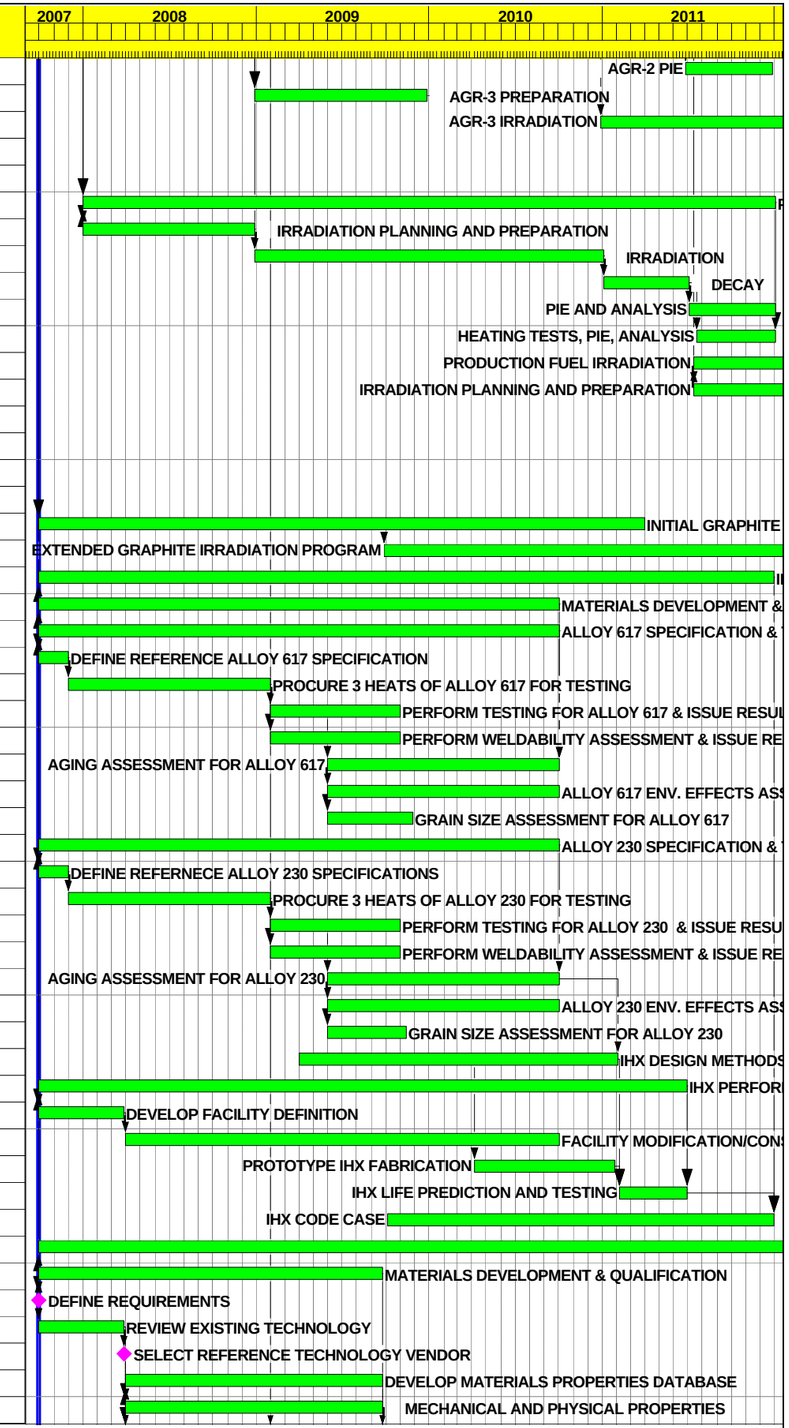

Start Date	01OCT07
Finish Date	09DEC16
Data Date	01OCT07
Run Date	18MAY07 14:08

Early Bar
Progress Bar
Critical Activity

NGPP

Sheet 3 of 7

NGNP PROJECT CONCEPTUAL DESIGN

Date	Revision	Checked	Approved

© Primavera Systems, Inc.

WBS	Activity ID	Activity Description	Orig Dur	Early Start	Early Finish	Predecessors	Successors
	ED-NHS-270	FRACTURE BEHAVIOR/WIEBULL STATISTICS DATA	390	31MAR08	25SEP09	ED-NHS-240*	
	ED-NHS-280	HELIUM ENVIRONMENT COMPATIBILITY DATA	390	31MAR08	25SEP09	ED-NHS-240*	
	ED-NHS-290	LONG-TERM ENVIRONMENT AGING TESTS	390	31MAR08	25SEP09	ED-NHS-210*, ED-NHS-240*, ED-NHS-250*	
	ED-NHS-300	PREPARE & ISSUE DESIGN METHODS & CRITERIA	650	31MAR08	24SEP10	ED-NHS-230*	ED-NHS-305*, ED-NHS-338*
	ED-NHS-305	PERFORMANCE VERIFICATION	915	29MAR10	27SEP13	ED-NHS-300*	
	ED-NHS-310	MANUFACTURING TECHNOLOGY ASSESSMENTS	650*	31MAR08	24SEP10	ED-NHS-320*	ED-NHS-335*
	ED-NHS-320	CERAMIC TO CERAMIC JOINTS	390	31MAR08	25SEP09	ED-NHS-240*	ED-NHS-310*, ED-NHS-330*
	ED-NHS-330	CERAMIC TO METAL JOINTS	390	31MAR08	25SEP09	ED-NHS-320*	ED-NHS-335*
	ED-NHS-335	HEADER/PIPING DEVELOPMENT	260	28SEP09	24SEP10	ED-NHS-310*, ED-NHS-330*	
	ED-NHS-338	CODES AND STANDARDS	1,308	27SEP10	30SEP15	ED-NHS-200*, ED-NHS-300*	
	ED-NHS-340	PRIMARY HTS HIGH TEMP DUCTS & INSULATION	522	31MAR08	30MAR10	ED-NHS-240*	
2 22 HPF HYDROGEN PRODUCTION FACILITY							
	ED-HPF-100	PREPARE & ISSUE HPF R&D PLAN	66	01OCT07	31DEC07		ED-HPF-120*, ED-HPF-130*, ED-HPF-170*,
	ED-HPF-110	BASIC DATA	420*	01OCT07	08MAY09	ED-HPF-120*	ED-HPF-140*
	ED-HPF-120	RESEARCH & DEVELOP THERMODYNAMIC DATA	240	01OCT07	29AUG08	ED-HPF-100*	ED-HPF-110*, ED-HPF-140*, ED-HPF-150*
	ED-HPF-130	RESEARCH & DEVELOP REACTION KINETICS DATA	240	01OCT07	29AUG08	ED-HPF-100*	ED-HPF-140*
	ED-HPF-140	PERFORM DATA ANALYSIS & ISSUE RESULTS	180	01SEP08	08MAY09	ED-HPF-110*, ED-HPF-120*, ED-HPF-130*	
	ED-HPF-150	SUPPLEMENTARY MATERIALS	480	24NOV08	24SEP10	ED-HPF-120*	ED-HPF-200*
	ED-HPF-160	DECOMPOSER	1,485*	01OCT07	07JUN13	ED-HPF-170*	ED-HPF-195*
	ED-HPF-170	RESEARCH & DEVELOP CATALYST & ISSUE RESULTS	480	01OCT07	31JUL09	ED-HPF-100*	ED-HPF-160*
	ED-HPF-180	RESEARCH & DEVELOP CERAMIC & ISSUE RESULTS	240	01OCT07	29AUG08	ED-HPF-100*	ED-HPF-182*
	ED-HPF-182	R&D CERAMIC TO METAL BONDING	600	20APR09	05AUG11	ED-HPF-180*	ED-HPF-195*
	ED-HPF-190	RESEARCH & DEV. SEALING MATERIALS & ISSUE RESLTS	600	01OCT07	15JAN10	ED-HPF-100*	
	ED-HPF-195	PILOT TESTING	480	08AUG11	07JUN13	ED-HPF-160*, ED-HPF-182*	
	ED-HPF-200	PERFORM SULFURIC ACID CONCENTRATOR HETP TESTS	240	24NOV08	23OCT09	ED-HPF-150*	
	ED-HPF-210	ELECTROLYZER	2,400*	01OCT07	09DEC16	ED-HPF-220*	ED-HPF-280*
	ED-HPF-220	PERFORM CATALYST LOADING TESTS & ISSUE RESULTS	480	01OCT07	31JUL09	ED-HPF-100*	ED-HPF-210*
	ED-HPF-230	RESEARCH & DEVELOP CELL MEMBRANE & ISSUE RESULTS	480	01OCT07	31JUL09	ED-HPF-100*	ED-HPF-240*
	ED-HPF-240	CELL DEVELOPMENT	360	03AUG09	17DEC10	ED-HPF-230*	ED-HPF-250*
	ED-HPF-250	PROTOTYPE CELL	360	20DEC10	04MAY12	ED-HPF-240*	ED-HPF-260*
	ED-HPF-260	PILOT CELL	360	07MAY12	20SEP13	ED-HPF-250*	ED-HPF-270*
	ED-HPF-270	PILOT PLANT	360	23SEP13	06FEB15	ED-HPF-260*	ED-HPF-280*
	ED-HPF-280	BUILD FULL-SCALE DEMO AT IDAHO	480	09FEB15	09DEC16	ED-HPF-210*, ED-HPF-270*	
2 22 PCF POWER CONVERSION FACILITY							
	ED-PCF-100	STEAM GENERATORS	1,305*	01OCT07	28SEP12	ED-PCF-110*	ED-PCF-171*
	ED-PCF-110	PREPARE & ISSUE PCF R&D PLAN	66	01OCT07	31DEC07		ED-PCF-100*, ED-PCF-120*
	ED-PCF-120	REVIEW/REASSEMBLE EXISTING SG DEVELOPMENT DATA	262	01OCT07	30SEP08	ED-PCF-110*	ED-PCF-130*, ED-PCF-140*, ED-PCF-150*,
	ED-PCF-130	PERFORM INLET FLOW DISTRIBUTION	739	01OCT08	01AUG11	ED-PCF-120*	
	ED-PCF-140	PERFORM INSULATION VERIFICATION TESTING	523	01OCT08	01OCT10	ED-PCF-120*	
	ED-PCF-150	PERFORM FRETTING & SLIDING WEAR PROTECTION TESTS	523	01OCT08	01OCT10	ED-PCF-120*	ED-PCF-171*
	ED-PCF-160	PERFORM TUBE WEAR PROTECTION DEVICE TESTING	978	01OCT08	29JUN12	ED-PCF-120*	
	ED-PCF-170	PERFORM SHROUD SEAL TESTING	913	01OCT08	30MAR12	ED-PCF-120*	
	ED-PCF-171	LEAD-IN/LEAD-OUT/TRANS./EXPANSION LOOP MOCKUPS	521	01OCT10	28SEP12	ED-PCF-100*, ED-PCF-150*	
	ED-PCF-180	DEVELOP TUBING INSPECTION METHODS AND EQUIPMENT	783	01OCT08	30SEP11	ED-PCF-120*	
TECHNOLOGY DEVELOPMENT							
	ED-TD-100	PREPARE TECHNOLOGY DEVELOPMENT SUMMARY REPORT	64	02FEB09*	30APR09	PA-PP-265E	ED-TD-110*
	ED-TD-110	ISSUE TECHNOLOGY DEVELOPMENT SUMMARY REPORT	0		30APR09	ED-TD-100*	
2 32 000 CONCEPTUAL DESIGN							
2 32 PSE	ED-CD-100	PLANT LEVEL DESIGN & INTEGRATION	392*	01OCT07	31MAR09	ED-CD-120*	ED-CD-420*
	ED-CD-110	CONCEPTUAL DESIGN FUTURE STUDIES	89*	01OCT07	31JAN08	ED-CD-120*	ED-CD-170*
	ED-CD-120	PREP & ISSUE STUDY C.1 HEAT APPLICATION ASSESS	66	01OCT07	31DEC07		ED-CD-100*, ED-CD-110*, ED-PM-100*

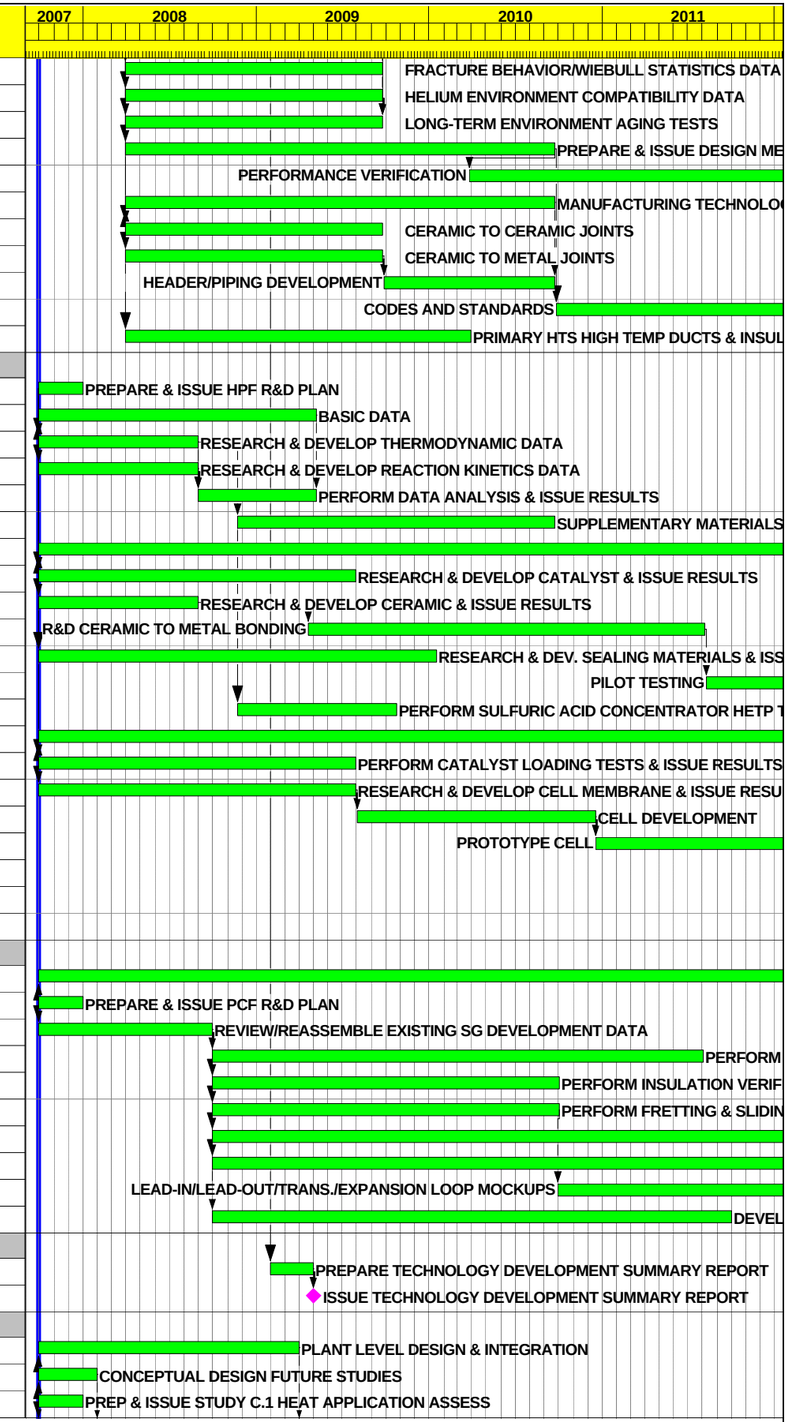

Start Date	01OCT07
Finish Date	09DEC16
Data Date	01OCT07
Run Date	18MAY07 14:08

Early Bar
Progress Bar
Critical Activity

NGPP

Sheet 4 of 7

NGNP PROJECT CONCEPTUAL DESIGN

Date	Revision	Checked	Approved

© Primavera Systems, Inc.

WBS	Activity ID	Activity Description	Orig Dur	Early Start	Early Finish	Predecessors	Successors
	ED-CD-130	PREP & ISSUE STUDY C.2 TOP LEVEL REQS & PLANS	66	01OCT07	31DEC07		ED-CD-210*
	ED-CD-140	PREP & ISSUE STUDY C.3 INITIAL LICENSING EVENTS	89	01OCT07	31JAN08		
	ED-CD-150	PREP & ISSUE STUDY C.7 VALUE ENGINEERING	89	01OCT07	31JAN08		
	ED-CD-160	PREP & ISSUE STUDY C.9 CONSTRUCTION MODULARIZTN	89	01OCT07	31JAN08		
	ED-CD-170	PREP & ISSUE STUDY C.12 MAJOR EQUIP TRANS & FAB	89	01OCT07	31JAN08	ED-CD-110*	
	ED-CD-180	PLANT LEVEL ENGINEERING	392*	01OCT07	31MAR09	ED-CD-190*	ED-CD-310*
	ED-CD-190	UPDATE PLANT LEVEL REQ AND FUNCTIONAL ANALYSIS	40	01OCT07	23NOV07		ED-CD-180*, ED-CD-200*
	ED-CD-200	DESIGN FOR NUCLEAR SAFETY ISSUE	20	12NOV07	07DEC07	ED-CD-190*	
	ED-CD-210	PERFORM PLANT LEVEL DESIGN & ISSUE DOCUMENTATION	59	01JAN08	21MAR08	ED-CD-130*	ED-CD-220*
	ED-CD-220	PERFORM HAZOP & ISSUE RESULTS	15	05MAR08	25MAR08	ED-CD-210*	ED-CD-230*
	ED-CD-230	DESIGN & ISSUE INFRASTRUCTURE (INCL FMECA) DOCS	39	01APR08	23MAY08	ED-CD-220*	ED-CD-240*
	ED-CD-240	PERFORM FUNCTIONAL AREAS REQS ANALYSIS/RESULTS	39	01APR08	23MAY08	ED-CD-230*	ED-CD-250*
	ED-CD-250	UPDATE DESIGN FOR NUCLEAR SAFETY	21	02JUN08	30JUN08	ED-CD-240*	ED-CD-260*, ED-CD-270*
	ED-CD-260	PERFORM PLANT PRELIMINARY DESIGN REVIEW	23	01JUL08	31JUL08	ED-CD-250*	
	ED-CD-270	DESIGN & ISSUE PLANT CONCEPT LAYOUTS	44	02JUN08	31JUL08	ED-CD-250*	ED-CD-280*
	ED-CD-280	PERFORM CONCEPT DESIGN ANALYSIS & ISSUE RESULTS	25	01AUG08	04SEP08	ED-CD-270*	ED-CD-290*
	ED-CD-290	PERFORM HAZOP 2 & ISSUE RESULTS	11	01SEP08	15SEP08	ED-CD-280*	
	ED-CD-300	PLANT SYSTEM DESIGN REVIEW	13	15DEC08*	31DEC08		ED-CD-310*
	ED-CD-310	PERFORM SEISMIC ANALYSIS & ISSUE RESULTS	64	01JAN09	31MAR09	ED-CD-180*, ED-CD-300*	
	ED-CD-320	PLANT SAFETY & INVESTMENT PROTECTION ASSESSMENTS	392*	01OCT07	31MAR09	ED-CD-370	ED-CD-360*
	ED-CD-330	DEVELOP INTERNAL EVENTS PRA MODEL	272	01NOV07*	14NOV08		ED-CD-340*, ED-CD-350*
	ED-CD-340	DEVELOP EXTERNAL EVENTS PRA MODEL	293	01NOV07	15DEC08	ED-CD-330*	
	ED-CD-350	PERFORM EVENT CONSEQUENCE ANALYSIS/RESULTS	195	03DEC07	29AUG08	ED-CD-330*	ED-CD-360*
	ED-CD-360	PERFORM RISK ANALYSIS & ISSUE RESULTS	185	16JUL08	31MAR09	ED-CD-320*, ED-CD-350*	
	ED-CD-370	DESIGN & LICENSING SUPPORT & INTERFACE	370	01OCT07	27FEB09		ED-CD-320
	ED-CD-380	PRA PLANNING, INTEGRATION & REVIEW	392	01OCT07	31MAR09		ED-CD-390*
	ED-CD-390	PREP REVISED NGNP PROJECT COST ESTIMATE REPORT	42	02FEB09	31MAR09	ED-CD-380*	ED-CD-400*, ED-CD-410*
	ED-CD-400	ISSUE REVISED COST ESTIMATE REPORT	0		31MAR09	ED-CD-390*	
	ED-CD-410	PREP CONCEPTUAL DESIGN SUMMARY REPORT	42	02FEB09	31MAR09	ED-CD-390*	ED-CD-420*
	ED-CD-420	ISSUE PLANT LEVEL CONCEPTUAL DESIGN SUMMARY RPT	0		31MAR09	ED-CD-100*, ED-CD-410*	
	ED-CD-430	OVERALL SITE & BOP	392*	01OCT07	31MAR09	ED-CD-450*	ED-CD-550*
	ED-CD-440	CONCEPTUAL DESIGN FUTURE STUDIES	89*	01OCT07	31JAN08	ED-CD-450*	ED-CD-450*
	ED-CD-450	PREPARE AND ISSUE STUDY C.5 PLANT LAYOUT	89	01OCT07	31JAN08	ED-CD-440*	ED-CD-430*, ED-CD-440*, ED-CD-460*
	ED-CD-460	PREP & ISSUE STUDY C.10 WASTEWTR TREATMENT OPT.	43	01NOV07	31DEC07	ED-CD-450*	
	ED-CD-470	GEOTECHNICAL	196*	24DEC07	22SEP08	ED-CD-480*	ED-CD-490*
	ED-CD-480	PERFORM GEOTECHNICAL INVESTIGATION/ISSUE RESULTS	175	24DEC07*	22AUG08		ED-CD-470*, ED-CD-490*, ED-CD-500*
	ED-CD-490	PERFORM PROBABLISTIC SEISMIC HAZARD ANALYSIS	171	28JAN08	22SEP08	ED-CD-470*, ED-CD-480*	
	ED-CD-500	PREPARE & ISSUE BUILDING REQUIREMENT DOCUMENTS	87	01JAN08	30APR08	ED-CD-480*	
	ED-CD-510	PREPARE & ISSUE CONCEPTUAL EQUIP & SYSTEM CALCS	392	01OCT07	31MAR09		ED-CD-520*, ED-CD-540*
	ED-CD-520	DESIGN & ISSUE PFDS AND UFDS	196	01JAN08	30SEP08	ED-CD-510*	
	ED-CD-530	DESIGN & ISSUE BUILDING LAYOUT DRAWINGS	185	01OCT07	13JUN08		ED-CD-535*
	ED-CD-535	UPDATE & ISSUE REVISED PLOT PLAN	34	16JUN08	31JUL08	ED-CD-530*	
	ED-CD-540	PREPARE BOP CONCEPTUAL DESIGN SUMMARY REPORT	42	02FEB09	31MAR09	ED-CD-510*	ED-CD-550*
	ED-CD-550	ISSUE BOP CONCEPTUAL DESIGN SUMMARY REPORT	0		31MAR09	ED-CD-430*, ED-CD-540*, ED-PM-100*	
2 32 NHS	ED-CD-560	NUCLEAR HEAT SUPPLY FACILITY	392*	01OCT07	31MAR09	ED-CD-570*, ED-CD-580*	ED-CD-670*
	ED-CD-570	PREP & ISSUE STUDY C.4 NHSS CONFIGURATION	110	01OCT07	29FEB08		ED-CD-560*, ED-CD-590*
	ED-CD-580	NHS ENGINEERING	282*	03MAR08	31MAR09	ED-CD-590*	ED-CD-560*
	ED-CD-585	NHS ENGINEERING INTEGRATION	65*	03MAR08	30MAY08	ED-CD-590*	ED-CD-600*
	ED-CD-590	PERFORM NHS REQS & FUNCTIONAL ANALYSIS/RESULTS	60	03MAR08	23MAY08	ED-CD-570*	ED-CD-580*, ED-CD-585*, ED-CD-600*
	ED-CD-600	DESIGN INTEGRATED HEAT GENERATION UNIT	30	21APR08	30MAY08	ED-CD-585*, ED-CD-590*	ED-CD-610*
	ED-CD-610	DESIGN & ISSUE OF CRITICAL NHSS SYSTEMS	120	02JUN08	14NOV08	ED-CD-600*	ED-CD-620*

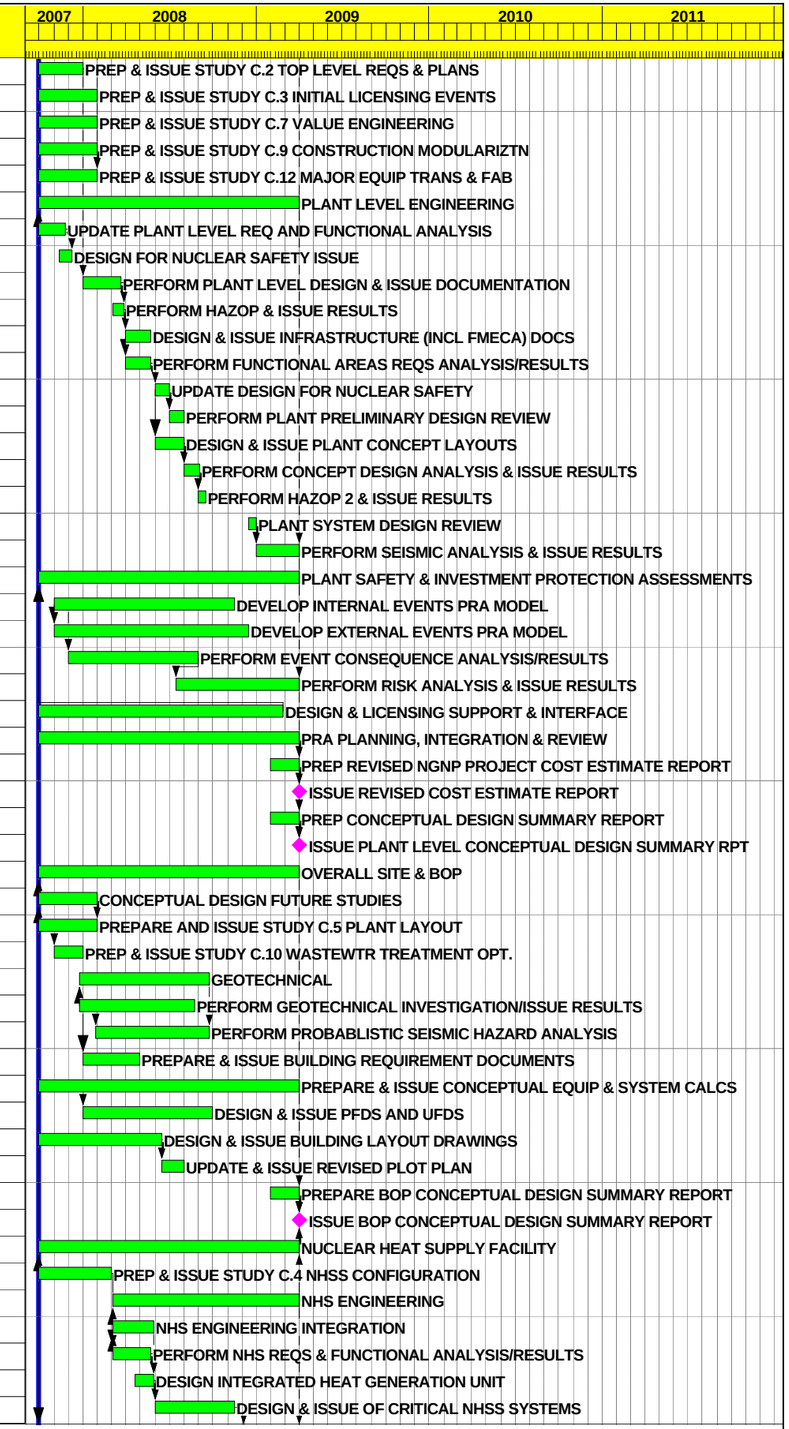

Start Date	01OCT07
Finish Date	09DEC16
Data Date	01OCT07
Run Date	18MAY07 14:08

Early Bar
Progress Bar
Critical Activity

NGPP

Sheet 5 of 7

NGNP PROJECT CONCEPTUAL DESIGN

Date	Revision	Checked	Approved

© Primavera Systems, Inc.

WBS	Activity ID	Activity Description	Orig Dur	Early Start	Early Finish	Predecessors	Successors
	ED-CD-620	DESIGN & ISSUE OF NHS ELECTRICAL SYSTEM	60	15SEP08	05DEC08	ED-CD-610*	ED-CD-630*
	ED-CD-630	DESIGN & ISSUE OF NHS CONTROL & INSTRUMENTATION	76	01SEP08	15DEC08	ED-CD-620*	ED-CD-640*
	ED-CD-640	DESIGN & ISSUE OF NHS SUPPORT SYSTEMS	328	01OCT07	31DEC08	ED-CD-630*	ED-CD-650*
	ED-CD-650	DESIGN & ISSUE NHS BUILDING	328	01OCT07	31DEC08	ED-CD-640*	ED-CD-660*
	ED-CD-660	PREPARE NHS CONCEPTUAL DESIGN SUMMARY REPORT	54	15JAN09	31MAR09	ED-CD-650*	ED-CD-670*
	ED-CD-670	ISSUE NHS CONCEPTUAL DESIGN SUMMARY REPORT	0		31MAR09	ED-CD-560*, ED-CD-660*	
2 32 HPF	ED-CD-680	HYDROGEN PRODUCTION FACILITY	392*	01OCT07	31MAR09	ED-CD-690*	ED-RD-150*
	ED-CD-690	PLAN CONCEPTUAL DESIGN EFFORT	12	01OCT07	16OCT07		ED-CD-680*
	ED-CD-700	PREP & ISSUE STUDY C.6 HYDROGEN PROCESS/MATL SEL	110	01OCT07	29FEB08		ED-CD-730*, ED-CD-740*
	ED-CD-720	PREPARE & ISSUE BASIC CONFIGURATION STUDIES	65*	03MAR08	30MAY08	ED-CD-730*	ED-CD-760*
	ED-CD-730	PREPARE & ISSUE PRODUCT SPECIFICATIONS	21	03MAR08	31MAR08	ED-CD-700*	ED-CD-720*, ED-CD-760*, ED-CD-800*
	ED-CD-740	OPTIMIZE OPERATING CONDITIONS & ISSUE RESULTS	27	03MAR08	08APR08	ED-CD-700*	ED-CD-750*, ED-CD-840*
	ED-CD-750	OPTIMIZATION OF ACID STORAGE/LETDOWN & RESULTS	16	09APR08	30APR08	ED-CD-740*	ED-CD-770*
	ED-CD-760	PREPARE & ISSUE ELECTROLYZER STUDIES	44	01APR08	30MAY08	ED-CD-720*, ED-CD-730*	ED-CD-780*
	ED-CD-770	OPTIMIZED ELECROLYZER/ABSORBER CONFIG	12	08MAY08	23MAY08	ED-CD-750*	
	ED-CD-780	ELECTROLYZER PURITY REQUIREMENTS	44	01APR08	30MAY08	ED-CD-760*	
	ED-CD-790	PREPARE & ISSUE DECOMPOSER STUDIES	33*	17MAR08	30APR08	ED-CD-800*	ED-CD-820*
	ED-CD-800	PRELIMINARY CONFIGURATION STUDY	11	17MAR08	31MAR08	ED-CD-730*	ED-CD-790*, ED-CD-810*
	ED-CD-810	INTEGRATION MEETING	0		31MAR08	ED-CD-800*	ED-CD-820*
	ED-CD-820	DEVELOP CONCEEPTUAL CONFIGURATION & ISSUE RESULT	22	01APR08	30APR08	ED-CD-790*, ED-CD-810*	
	ED-CD-830	HPF ENGINEERING	163*	16APR08	28NOV08	ED-CD-840*	ED-CD-920*
	ED-CD-840	PERFORM PCF REQS & FUNCTIONAL ANALYSIS/RESULTS	38	16APR08	06JUN08	ED-CD-740*	ED-CD-830*, ED-CD-850*
	ED-CD-850	PREP & ISSUE DESIGN BASIS, FLOW DIA, & M&E BAL	21	15MAY08	12JUN08	ED-CD-840*	ED-CD-860*, ED-CD-880*, ED-CD-890*
	ED-CD-860	PREP & ISSUE MATERIALS&DESIGN COND FOR FLOW SHT	9	13JUN08	25JUN08	ED-CD-850*	ED-CD-870*
	ED-CD-870	PREP & ISSUE PRELIM PROCESS HAZARD ASSESSMENT	3	26JUN08	30JUN08	ED-CD-860*	
	ED-CD-880	PREP & ISSUE EQUIP LIST AND PROCESS DATA SHEETS	53	13JUN08	26AUG08	ED-CD-850*	ED-CD-900*
	ED-CD-890	PREP & ISSUE ELECTROLYZER/DECOMPOSER DRAWINGS	14	13JUN08	02JUL08	ED-CD-850*	
	ED-CD-900	PREP & ISSUE P&IDS (PRELIM & KEY SYSTEMS ONLY)	50	27AUG08	04NOV08	ED-CD-880*	ED-CD-910*
	ED-CD-910	PREP & ISSUE INS DATA, ENG NOTES, OPER GUIDELINE	17	23OCT08	14NOV08	ED-CD-900*	ED-CD-920*
	ED-CD-920	PREP & ISSUE PRELIM HAZOPS & FMEA (SELECT SYS)	24	28OCT08	28NOV08	ED-CD-830*, ED-CD-910*	ED-CD-930*
	ED-CD-930	PREP & ISSUE SAFETY REVISIONS	14	01DEC08	18DEC08	ED-CD-920*	ED-CD-950*, ED-CD-970*
	ED-CD-940	PIPING AND MECHANICAL STUDIES	42*	24NOV08	20JAN09	ED-CD-950*	ED-CD-970*
	ED-CD-950	DESIGN ISSUE DECOMPOSER ARRANGEMENT & PLOT	14	24NOV08	11DEC08	ED-CD-930*	ED-CD-940*, ED-CD-960*
	ED-CD-960	INTEGRATION MEETING	3	10DEC08	12DEC08	ED-CD-950*	ED-CD-970
	ED-CD-970	FINALIZE & ISSUE DECOMPOSER ARRANGMENT & PLOT	14	01JAN09	20JAN09	ED-CD-930*, ED-CD-940*, ED-CD-960	ED-RD-110*, ED-RD-140*
2 32 PM2	ED-PM-100	PROJECT MANAGEMENT	392*	01OCT07	31MAR09	ED-CD-120*	ED-CD-550*
	ED-RD-100	ISSUE R&D PLAN REVISION	22	22SEP08*	21OCT08		ED-RD-130*
	ED-RD-110	DEVELOP & ISSUE ESTIMATE	8	21JAN09	30JAN09	ED-CD-970*	ED-RD-120*
	ED-RD-120	DEVELOP & ISSUE SCHEDULE	8	21JAN09	30JAN09	ED-RD-110*	
	ED-RD-130	PREPARE & ISSUE PRELIM DESIGN PLAN	33	15SEP08	29OCT08	ED-RD-100*	
	ED-RD-140	PREPARE HPF CONCEPTUAL DESIGN SUMMARY REPORT	50	21JAN09	31MAR09	ED-CD-970*	ED-RD-150*
	ED-RD-150	ISSUE HPF CONCEPTUAL DESIGN SUMMARY REPORT	0		31MAR09	ED-CD-680*, ED-RD-140*	
	ED-RD-160	CONDUCT ENGINEERING SUPPORT DURING R&D	392	01OCT07	31MAR09		
2 32 PCF	ED-RD-170	POWER CONVERSION FACILITY	392*	01OCT07	31MAR09	ED-RD-180*	ED-RD-370*
	ED-RD-180	PREP & ISSUE STUDY C.11 STEAM GENERATOR DESIGN	89	01OCT07	31JAN08		ED-RD-170*, ED-RD-200*, ED-RD-210*, ED-RD-240
	ED-RD-190	ENGINEERING STUDIES	107*	01FEB08	30JUN08	ED-RD-200*	ED-RD-200*
	ED-RD-200	PERFORM & ISSUE PCS OPTIMIZATION RESULTS	107	01FEB08	30JUN08	ED-RD-180*, ED-RD-190*	ED-RD-190*
	ED-RD-210	PERFORM & ISSUE PCS DESIGN BASIS TRANSIENT ASSMT	86	01FEB08	30MAY08	ED-RD-180*	ED-RD-230*
	ED-RD-220	PCF ENGINEERING	288*	22FEB08	31MAR09	ED-RD-230*	ED-RD-370*
	ED-RD-230	PERFORM PCF REQS & FUNCTIONAL ANALYSIS/RESULTS	35	22FEB08	10APR08	ED-RD-210*	ED-RD-220*, ED-RD-240*
	ED-RD-240	PREP & ISSUE PCF SYSTEM REQUIREMENTS DOCUMENTS	89	18APR08	20AUG08	ED-RD-180, ED-RD-230*	ED-RD-250*, ED-RD-280*, ED-RD-320*, ED-RD-340*,

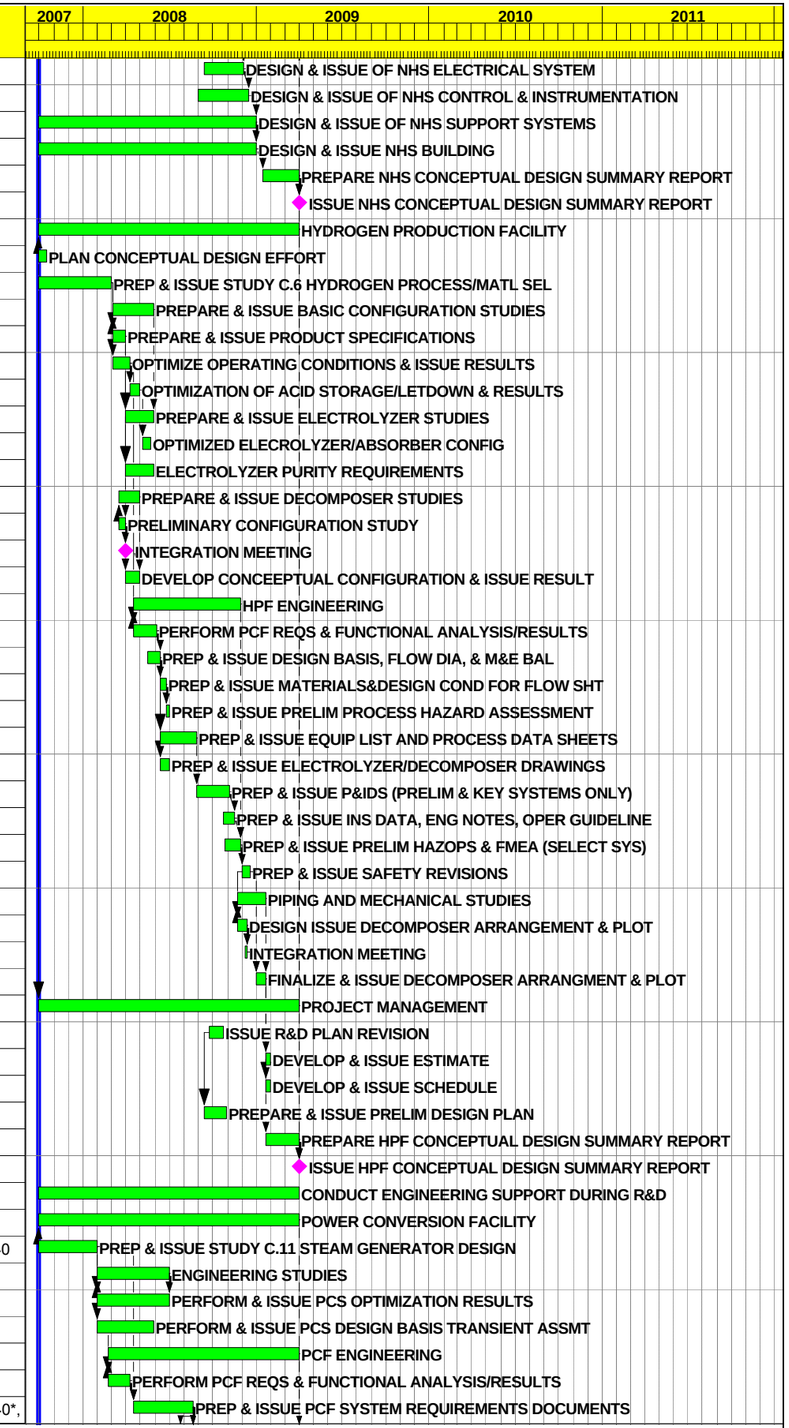

Start Date	01OCT07
Finish Date	09DEC16
Data Date	01OCT07
Run Date	18MAY07 14:08

Early Bar
Progress Bar
Critical Activity

NGPP

Sheet 6 of 7

NGNP PROJECT CONCEPTUAL DESIGN

Date	Revision	Checked	Approved

© Primavera Systems, Inc.

WBS	Activity ID	Activity Description	Orig Dur	Early Start	Early Finish	Predecessors	Successors
	ED-RD-250	PREP & ISSUE STEAM GENERATOR REQUIREMENT DOCS	67	24JUL08	24OCT08	ED-RD-240*	ED-RD-260*
	ED-RD-260	PREP & ISSUE STEAM GENERATOR PERFORMANCE SPEC	58	20OCT08	07JAN09	ED-RD-250*	ED-RD-270*
	ED-RD-270	DESIGN & ISSUE STEAM GENERATOR AREA LAYOUT/DWGS	27	06OCT08	11NOV08	ED-RD-260*	ED-RD-290*, ED-RD-300*
	ED-RD-280	PREP & ISSUE STG REQUIREMENT DOCUMENT	67	21AUG08	21NOV08	ED-RD-240*	ED-RD-310*
	ED-RD-290	PREP & ISSUE STG PERFORMANCE SPEC	67	12NOV08	12FEB09	ED-RD-270*	
	ED-RD-300	DESIGN & ISSUE STG AREA LAYOUT & DRAWINGS	44	12NOV08	12JAN09	ED-RD-270*	
	ED-RD-310	PREP & ISSUE AIR COOLED CONDENSER REQ. DOCUMENT	45	24NOV08	23JAN09	ED-RD-280*	ED-RD-330*, ED-RD-360*
	ED-RD-320	PREP & ISSUE AIR COOLED CONDENSER PERF SPEC	67	21AUG08	21NOV08	ED-RD-240*	
	ED-RD-330	DESIGN & ISSUE AIR COOLED CONDENSER LAYOUT/DWGS	44	29JAN09	31MAR09	ED-RD-310*	
	ED-RD-340	PREP & ISSUE STG BUILDING REQUIREMENT DOCUMENTS	82	21AUG08	12DEC08	ED-RD-240*	
	ED-RD-350	PREP & ISSUE SG BUILDING REQUIREMENT DOCUMENT	83	21AUG08	15DEC08	ED-RD-240*	
	ED-RD-360	PREPARE PCF CONCEPTUAL DESIGN SUMMARY REPORT	44	29JAN09	31MAR09	ED-RD-310*	ED-RD-370*
	ED-RD-370	ISSUE PCF CONCEPTUAL DESIGN SUMMARY REPORT	0		31MAR09	ED-RD-170*, ED-RD-220*, ED-RD-360*	

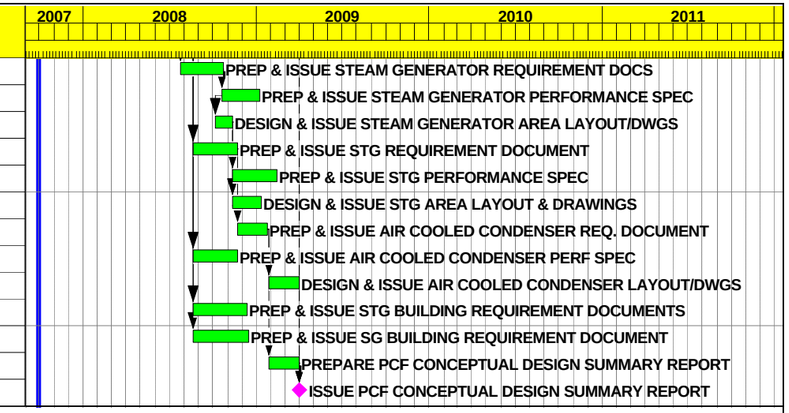

Start Date	01OCT07
Finish Date	09DEC16
Data Date	01OCT07
Run Date	18MAY07 14:08

Early Bar
Progress Bar
Critical Activity

© Primavera Systems, Inc.

NGPP

NGNP PROJECT CONCEPTUAL DESIGN

Date	Revision	Checked	Approved