INL/EXT-09-16218

NGNP Technology Development Road Mapping Report

Prepared by Areva for the Next Generation Nuclear Plant Project

L. Lomers

September 2009

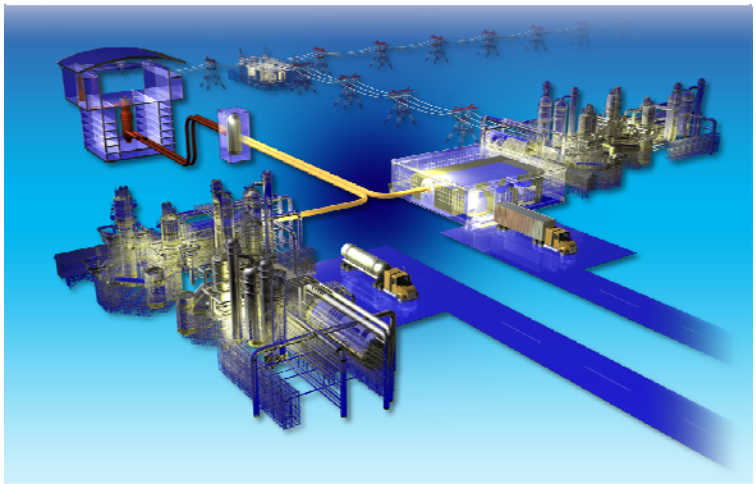

The INL is a U.S. Department of Energy National Laboratory operated by Battelle Energy Alliance.

DISCLAIMER

This information was prepared as an account of work sponsored by AREVA for an agency of the U.S. Government. Neither the U.S. Government nor any agency thereof, nor any of their employees, makes any warranty, expressed or implied, or assumes any legal liability or responsibility for the accuracy, completeness, or usefulness, of any information, apparatus, product, or process disclosed, or represents that its use would not infringe privately owned rights. References herein to any specific commercial product, process, or service by trade name, trade mark, manufacturer, or otherwise, does not necessarily constitute or imply its endorsement, recommendation, or favoring by the U.S. Government or any agency thereof. The views and opinions of authors expressed herein do not necessarily state or reflect those of the U.S. Government or any agency thereof.

TDR-3001031-003
NON-PROPRIETARY

NGNP Technology Development Road Mapping Report

September 2009

Disclaimer

This report was prepared as an account of work sponsored by an agency of the United States Government. Neither the United States Government nor any agency thereof, nor any of their employees, nor their contractors and subcontractors, makes any warranty, express or implied, or assumes any legal liability or responsibility for the accuracy, completeness, or usefulness of any information, apparatus, product, or process disclosed, or represents that its use would not infringe privately owned rights. Reference herein to any specific commercial product, process, or service by trade name, trademark, manufacturer, or otherwise does not necessarily constitute or imply its endorsement, recommendation, or favoring by the United States Government or any agency thereof. The views and opinions of authors expressed herein do not necessarily state or reflect those of the United States Government or any agency thereof.

BEA Contract No. 75310

AREVA

Record of Revisions

Revision No.	Date	Pages/Sections/ Paragraphs Changed	Brief Description / Change Authorization
000	October 2008	N/A	Initial Release
001	January 2009	All	Minor editorial changes
002	April 2009	All	Revised NGNP baseline
003	September 2009	Section 6.3.1, Appendix A.3 (added table number only), Appendix C.3, Appendix E.1	Miscellaneous editorial changes

Table of Contents

Page

1.0 EXECUTIVE SUMMARY 8

2.0 ACRONYMS 15

3.0 INTRODUCTION 17

4.0 SCOPE 18

5.0 METHODOLOGY 18
- 5.1 Establish Baseline TRL Scores 19
- 5.2 Establish Critical PASSC List 20
- 5.3 Develop Decision Discriminators 21
- 5.4 Identify Down-Select Tasks 21
- 5.5 Determine Maturation Tasks 21
- 5.6 Develop Test Plans 21

6.0 CRITICAL PASSC TECHNOLOGY DEVELOPMENT 22
- 6.1 Nuclear Heat Supply System (NHSS) 22
  - 6.1.1 Reactor Internals 22
  - 6.1.2 Reactor Core 27
  - 6.1.3 Control Rod Drives 30
  - 6.1.4 Reactor Cavity Cooling System (RCCS) 32
- 6.2 Main Heat Transport System (HTS) 35
  - 6.2.1 Main Helium Circulator 35
  - 6.2.2 Circulator Shutoff Valve 38
  - 6.2.3 Hot Duct 40
  - 6.2.4 Steam Generator 43
- 6.3 Other Reactor Support Systems 46
  - 6.3.1 Primary Loop Instrumentation 46
  - 6.3.2 Fuel Handling System 49

7.0 REFERENCES 54

APPENDIX A : REACTOR INTERNALS TEST PLANS 55
- A.1 Reactor Internals Test Plan (TRL 4 to 5) 56
- A.2 Reactor Internals Test Plan (TRL 5 to 6) 62
- A.3 Reactor Internals Test Plan (TRL 6 to 7) 67

APPENDIX B : REACTOR CORE TEST PLANS 76
B.1 Reactor Core Test Plan (TRL 4 to 5) 77
B.2 Reactor Core Test Plan (TRL 5 to 6) 80
B.3 Reactor Core Test Plan (TRL 6 to 7) 82

APPENDIX C : CONTROL ROD DRIVES TEST PLANS 93
C.1 Control Rod Drives Test Plan (TRL 4 to 5) 94
C.2 Control Rod Drives Test Plan (TRL 5 to 6) 105
C.3 Control Rod Drives Test Plan (TRL 6 to 7) 113

APPENDIX D : REACTOR CAVITY COOLING SYSTEM TEST PLANS 119
D.1 Reactor Cavity Cooling System Test Plan (TRL 5 to 6) 120
D.2 Reactor Cavity Cooling System Test Plan (TRL 6 to 7) 128

APPENDIX E : MAIN HELIUM CIRCULATOR TEST PLANS 137
E.1 Main Helium Circulator Test Plan (TRL 6 to 7) 138

APPENDIX F : CIRCULATOR SHUTOFF VALVE TEST PLANS 156
F.1 Shutoff Valve Test Plan (TRL 6 to 7) 157

APPENDIX G : HOT DUCT TEST PLANS 163
G.1 Hot Duct (TRL 5 to 6) 164
G.2 Hot Duct (TRL 6 to 7) 172

APPENDIX H : STEAM GENERATOR TEST PLANS 178
H.1 Steam Generator (TRL 6 to 7) 179

APPENDIX I : PRIMARY LOOP INSTRUMENTATION TEST PLANS 191
I.1 Primary Loop Instrumentation (TRL 6 to 7) 192

APPENDIX J : FUEL HANDLING SYSTEM TEST PLANS 196
J.1 Fuel Handling Machine (TRL 6 to 7) 197

APPENDIX K : TECHNOLOGY DEVELOPMENT ROAD MAPS 208

List of Tables

Page

Table 5-1: TRL Definitions 19
Table 6-1: Reactor Internals Technical Maturity Assessment 26
Table 6-2: Main Helium Circulator Critical Design Parameters 37
Table 6-3: Circulator Shutoff Valve Critical Design Parameters 39
Table 6-4: Hot Duct Critical Design Parameters 42
Table 6-5: Proposed Steam Generator Design Overview 45
Table 6-6: Sensor Operating Parameters 47
Table A-1: Test Conditions 70
Table B-1: Test Conditions 84
Table B-2: Test Conditions 87
Table D-1: Test Conditions 123
Table D-2: Test Conditions 125
Table D-3: Test Conditions 135
Table E-1: Measured Parameters 144
Table E-2: Measured Parameters 150
Table E-3: Measured Parameters 153
Table F-1: Normal Operating Conditions 160
Table F-2: Startup Conditions 160
Table G-1: Test Conditions 169
Table G-2: Test Conditions 175
Table H-1: Test Conditions 187
Table I-1: Sensor Operating Parameters 193

List of Figures

Page

Figure 1-1. NGNP Conceptual Design System Configuration 9
Figure 6-1: Reactor Internals 25
Figure 6-2: Annular Prismatic Core Design 28
Figure 6-3: Core Layout 31
Figure 6-4: Segmented Control Rod Design 31
Figure 6-5: RCCS Layout 34
Figure 6-6: Schematic Configuration of the Main Helium Circulator Bearing Configuration 37
Figure 6-7: Hot Duct Layout 42
Figure 6-8: Proposed Steam Generator Design 44
Figure 6-9: Fueling Adaptor and Fuel Elevator 51
Figure 6-10: Fuel Handling Machine 52
Fig. A-1: Reactor Internals 57
Fig. A-2: Test Schedule for Reactor Internals for TRL from 4 to 5 61
Fig. A-3: Reactor Internals 63
Fig. A-4: Test Schedule for Reactor Internals for TRL from 5 to 6 66
Fig. A-5: Reactor Internals 68
Fig. A-6: Test Schedule for Reactor Internals for TRL from 6 to 7 75
Fig. B-1: Annular Prismatic Core Design 78
Fig. B-2: Test Schedule for Reactor Core for TRL from 6 to 7 92
Fig. C-1: Segmented Control Rod Design 96
Fig. C-2: Test Schedule for Control Rod Drives for TRL from 4 to 5 104
Fig. C-3: Segmented Control Rod Design 107
Fig. C-4: Test Schedule for Control Rod Drives for TRL from 5 to 6 112
Fig. C-5: Segmented Control Rod Design 115
Fig. C-6: Test Schedule for Control Rod Drives for TRL from 6 to 7 118
Fig. D-1: RCCS Layout 121
Fig. D-2: Test Schedule for RCCS for TRL from 5 to 6 127
Fig. D-3: RCCS Layout 129
Fig. D-4: Test Schedule for RCCS for TRL from 6 to 7 136
Fig. E-1: Circulator Layout (MHTGR) 141
Fig. E-2: Test Schedule for Main Helium Circulator for TRL from 6 to 7 155
Fig. F-1: Test Schedule for the Circulator Shutoff Valve for TRL from 6 to 7 162

List of Figures
(continued)

Page

Fig. G-1: Hot Duct Layout 165
Fig. G-2: Test Schedule for Hot Duct for TRL from 5 to 6 171
Fig. G-3: Hot Duct Layout 173
Fig. G-4: Test Schedule for Hot Duct for TRL from 6 to 7 177
Fig. H-1: Steam Generator Cutaway 180
Fig. H-2: Test Schedule for Steam Generator for TRL from 6 to 7 190
Fig. I-1: Test Schedule for Primary Loop Instrumentation for TRL from 6 to 7 195
Fig. J-1: Fuel Handling Machine 198
Fig. J-2: Test Schedule for Fuel Handling Machine for TRL from 6 to 7 207
Figure K-1: Reactor Internals Technology Development Road Map 209
Figure K-2: Reactor Core Technology Development Road Map 210
Figure K-3: Control Rod Drive Technology Development Road Map 211
Figure K-4: Reactor Cavity Cooling System Technology Development Road Map 212
Figure K-5: Helium Circulator Technology Development Road Map 213
Figure K-6: Circulator Shutoff Valve Technology Development Road Map 214
Figure K-7: Hot Duct Technology Development Road Map 215
Figure K-8: Steam Generator Technology Development Road Map 216
Figure K-9: Primary Loop Instrumentation Technology Development Road Map 217
Figure K-10: Fuel Handling Machine Technology Development Road Map 218

1.0 EXECUTIVE SUMMARY

Initial technology development road maps (TDRMs) were developed for each critical plant, area, system, structure, and component (PASSC) of the Next Generation Nuclear Plant (NGNP) for a reactor outlet temperature of 900ºC and a conventional steam cycle connected to the reactor through an intermediate gas loop. Subsequently, the NGNP project Senior Advisory Group recommended, and the NGNP project adopted, a lower reactor outlet temperature using a conventional steam cycle with a steam generator located in the primary loop for the prismatic concept. AREVA proposes a 750℃ reactor outlet temperature and a conventional steam cycle. This document updates information in the earlier TDRM report (e.g., the list of critical PASSCs, Technology Readiness Assessments, TDRMs and Test Plans) based on AREVA's current baseline. The plant configuration uses a prismatic block core and has two primary coolant loops, two steam generators, and one turbine generator. The steam produced by the steam generators provides energy to the turbine generator and one or more steam reboilers. The steam reboilers provide process steam to industrial processes through a tertiary process steam loop. The secondary side configuration is not fully defined at this point in conceptual design.

The NGNP reactor is in the earliest phase of conceptual design. The plant configuration has not been finalized, and therefore, many component design details remain undecided. Detailed technology development planning at this time benefits design development and research and development (R&D) planning. The present immature state of the NGNP design has limited the availability of detailed information and constrained design planning. The TDRMs in this report need to be reviewed and updated as more design details become available. This ongoing process highlights a need for maximum flexibility in the new test facilities to be built to support NGNP R&D and component qualification. As the design matures, so will the needs for the anticipated test facilities.

Previous versions of this report identified 11 critical PASSCs for the indirect steam cycle, which relied on an intermediate heat exchanger (IHX) to transfer heat to helium secondary heat transfer loops. The reactor configuration had three heat transfer loops, two for generating electric power (each loop had a steam generator unit that supplied a single turbine generator Power Conversion System) and one for supplying process heat for hydrogen production. Critical PASSCs are established by assessing whether either technology development or testing is required before systems or components in the Nuclear Heat Supply System (NHSS), Heat Transport System (HTS), Power Conversion System (PCS), or Balance of Plant (BOP) are ready for integration into the NGNP. Only PASSCs requiring development are critical. TRL rating sheets, technology development road maps, and test plans were developed for NGNP PASSCs requiring technology development to achieve a Technology Readiness Level (TRL) of 7 (System Demonstration at the Engineering Scale).

This revision of the report updates information in the previous report based on the following:

- Operating configuration and design parameters in the NGNP Design Baseline [4]
- Recommendations in the NGNP DDN/PIRT reconciliation document [5]
- Updated system terminology [6] and interfaces [7]; terminology used in the previous TDRM report for the NGNP configuration that connected the steam cycle to the reactor through an intermediate gas loop is identified in parentheses

The list of critical PASSCs was revised based on the new system configuration [4], shown in Figure 1-1. The changes are:

- Added High Pressure Reboiler and Low Pressure Reboiler for generating process steam
- Removed the compact IHX, the tubular IHX, the IHX vessels (formerly part of the Vessel System), the Secondary Gas Circulator (formerly part of the secondary heat transfer loop), the High Temperature Isolation Valve (formerly part of the hydrogen production heat transfer loop), and the Startup and Decay Heat Removal System

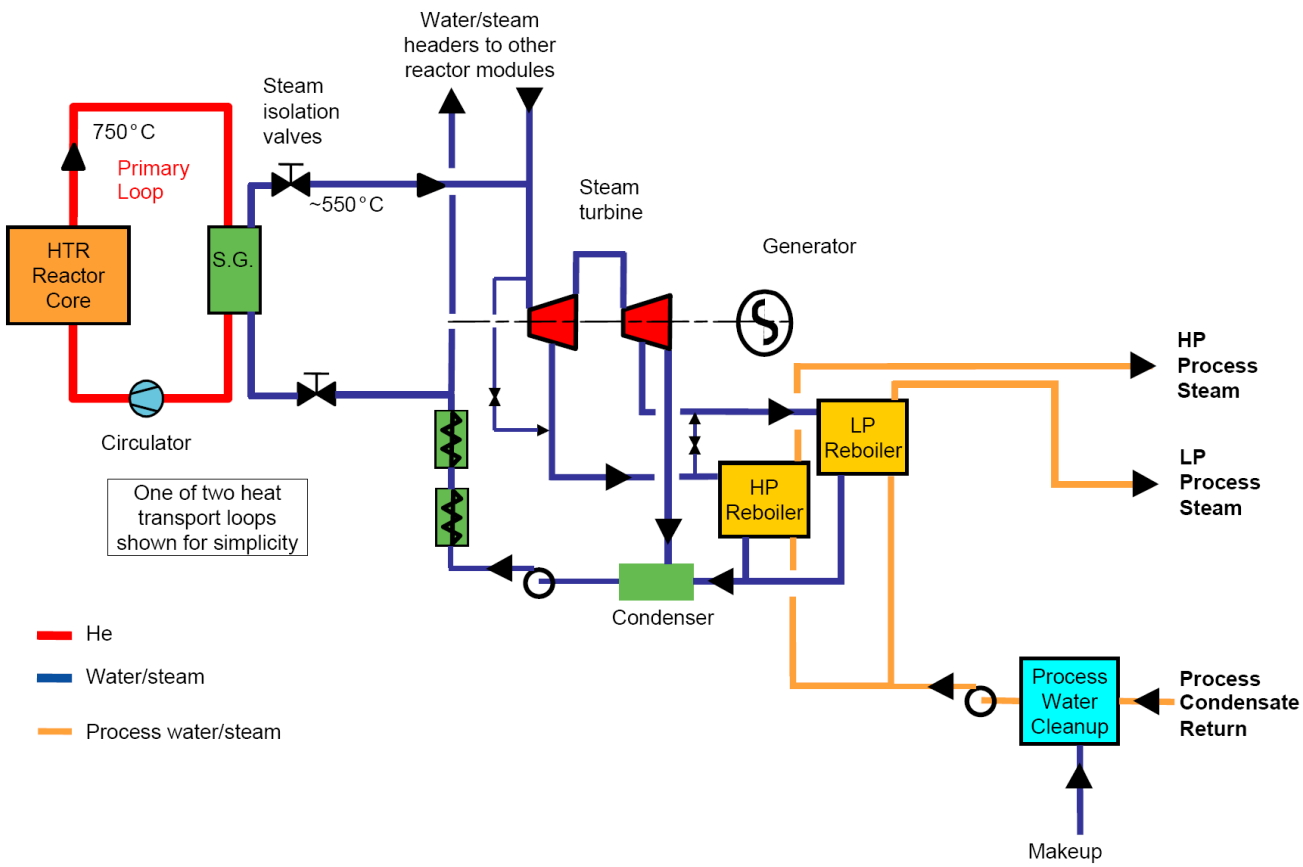

Figure 1-1. NGNP Conceptual Design System Configuration

The 13 PASSCs that were reviewed based on the conventional steam cycle NGNP reactor operating temperature and system configuration are:

- Nuclear Heat Supply System
  - Vessel System
  - Reactor Internals (formerly the Reactor Vessel Internals)
  - Reactor Core (formerly the Reactor Core Design Features)
  - Control Rod Drives (formerly the Neutron Control System)
  - Nuclear Instrumentation
  - Reactor Cavity Cooling System

- Main Heat Transport System (formerly referred to as the Heat Transport System)
  - Main Helium Circulator (formerly referred to as the Primary Gas Circulator)
  - Circulator Shutoff Valve
  - Hot Duct (formerly referred to as the Primary Hot Gas Duct)
  - Steam Generator
- Other Reactor Support Systems (formerly referred to as Auxiliary Systems or BOP)
  - Primary Loop Instrumentation
  - Fuel Handling System
- Process Heat Transport System
  - Steam Reboiler System (new system)

The following subsections give a brief description of each PASSC and a summary of the technology development. Elsewhere in this report, Section 5 describes the TRL methodology and Section 6 summarizes actions required before critical PASSCs are ready for installation into the NGNP. The TRL update report [9] contains the TRL rating sheets for the individual systems.

Vessel System

The Vessel System (VS) includes the Reactor Pressure Vessel (RPV), which houses the Reactor Core; two Cross Vessels (CV), which connect the RPV to the Steam Generator Vessel (SGV); and the SGV. The Vessel System is fabricated both in the vendor shop and at the NGNP site. Due to its size, the RPV must be shipped to the reactor site in four packages and field-welded together, if the NGNP is built at Idaho National Laboratory. Connecting welds between the RPV and CV and the CV and SGV must also be done on site.

The primary technical issues with the VS are the choice of material and the design conditions. Technology development is not required at the design baseline temperatures for the conventional steam cycle NGNP because the 750℃ rea ctor outlet temperature allows the use of LWR steels for the RPV. After further study of the seal between the upper closure head and the main RPV, it was concluded that a seal weld is preferable over the sealing devices used in light water reactors and earlier gas reactors. The lower reactor outlet temperature of 750℃ allows the use of steel (SA508/533) for the RPV. The selection of this material greatly simplifies design data needs and RPV qualification due to extensive industry experience with this type of steel in commercial light water reactors. The working group for the development of ASME Code Rule for High Temperature Gas Reactors concluded that currently available technology and materials data exist for developing ASME Code rules for the currently envisioned design. A road map for code development work is being developed under that activity. Therefore, this technology is ready for use in the NGNP without further technology development. Consequently, this system is not a critical PASSC and is not included in Section 6.

Reactor Internals

Reactor Internals include components that provide the structural interface between the Reactor Core and the Vessel System and also components that route helium between the Reactor Core and the Main Heat Transport and Shutdown Cooling Systems. In addition to providing structural support and directing of the helium flow, other major functions of the Reactor Internals include thermal and radiological shielding of the RPV, conservation of neutrons during power production, and serving as a key link in the conduction cooldown radial heat transport path.

The NGNP Reactor Internals are envisioned to consist of metallic, graphite, and composite materials depending on their function and location inside the vessel. The metallic components are mature technology requiring no further development. The graphite components are also mature, but development work is needed to qualify a replacement graphite grade for the previously used H451, which is no longer available. This graphite qualification work is ongoing within the NGNP program. Finally, if composites are selected for the internals, the composite components will require substantial development before installation into the NGNP. The development includes basic work to identify correct fibers, matrices, and architectures for each component and then the larger scale testing needed to qualify the components after their geometry and performance requirements are specified.

Reactor Core

The Reactor Core design is an annular arrangement of prismatic fuel and reflector elements located within a permanent graphite reflector. The annular core configuration is adopted to achieve a maximum power rating and still permit passive core decay heat removal while maintaining an acceptable fuel temperature distribution.

Extensive experience with prismatic fuel blocks gives confidence in the basic design of the Reactor Core. The present availability of the manufacturing technology that existed for similar designs needs to be assessed. The NGNP annular design is based on previous designs, such as MHTGR, GT-MHR, and ANTARES, that evolved over a number of years. An annular prismatic core has never been demonstrated in operation. One area of concern is the core's neutronic behavior, which needs to be characterized. This need might be met by benchmarking against previous cores, such as Fort Saint Vrain or the High Temperature Test Reactor, but critical testing may still be required. Potential issues include control rod worth, radial peaking, and temperature coefficient prediction, which may be tested on a smaller mock-up. An assessment must be made whether critical testing is required to support design and licensing of the Reactor Core.

The concept of including burnable poison in the core of a High Temperature Gas-Cooled Reactor (HTGR) to limit power peaking is new and has not been demonstrated in an operating HTGR. An analysis of burnable poison options is needed to determine the relative performance of the various options and to identify the technology development that would be required. The main options are discrete poison compacts, discrete poison wafers between fuel compacts, and burnable poison mixed with the fuel in fuel compacts. Neutronic and mechanical performance of these options must be characterized either with further analysis or with physical testing.

The available isotopic cross-section database needs to be verified for a graphite-moderated core made from currently available grades of graphite operating at high temperatures. A review of the available properties databases is needed to assess their adequacy for use on the NGNP design. If new cross-sections are needed then development work will be necessary.

The type of graphite used in the Fort Saint Vrain reactor is no longer available, but new grades of graphite are being developed, tested, and qualified. The development of fuel elements, fuel compacts, and nuclear-grade graphite is being addressed in ongoing programs.

Control Rod Drives

In this study, the Control Rod Drives PASSC is defined as the control rods (CR), the control rod drive mechanism (CRDM), and the associated equipment and sensors. Control rod drive technology is mature technology for reactors with operating temperatures below 800ºC, where standard materials like Alloy 800H can be used. However, at the high core temperatures of the NGNP during off-normal events, advanced materials such as Carbon/Carbon (C/C) or Silicon Carbide (SiC/SiC) composites may be preferred.

Initial development activities for the Control Rod Drives focus on precisely defining operating conditions and performance requirements during normal and off-normal conditions. Once this information is known, options for CR materials can be explored in detail. Alloy 800H CR cladding should be acceptable under normal operating conditions. During off-normal conditions where temperatures exceed the limit for 800H, CRs may be damaged and need to be replaced after the event. If the CR function is not compromised and the risk of an off-normal event is low, it may be acceptable to use standard materials. If it is determined that operating conditions and resulting consequences are not acceptable for Alloy 800H, then advanced materials will be needed, along with substantial development of the materials. Development includes basic work to identify the correct fibers, matrices, and material architectures for each of the components followed by larger scale testing to qualify the components once their geometry and performance requirements are specified.

Nuclear Instrumentation

In this report, Nuclear Instrumentation is comprised of external vessel neutron detectors, source range detectors, and in-core flux mapping units. These instruments monitor neutron flux levels during normal operation, startup, and shutdown. They also verify axial flux profiles and confirm power stability.

There was concern in the Preconceptual Design Report [3] about the availability of instruments that could operate in an NGNP that would operate at higher temperatures, use an IHX to transfer heat to a secondary heat transfer loop, and employ a Brayton Cycle instead of a conventional steam cycle. The previous TDRM concluded that commercially available instruments are available for all expected service conditions in the NGNP with a steam cycle connected to the reactor through an intermediate gas loop. These instruments include source range detectors and in-core flux mapping detectors that can operate at up to 600ºC. It is envisioned that the core will be designed to preclude exposure of these instruments to temperatures higher than this limit. Thus, this system is not a critical PASSC and is not included in Section 6.

Reactor Cavity Cooling System

The Reactor Cavity Cooling System (RCCS), which receives heat transferred from the vessel, includes the cavity cooler panels, which consist of a closed tube wall surrounding the RPV and function as an efficient heat sink. The primary functions of the RCCS are to protect the reactor cavity concrete, including RPV supports, from overheating during normal operation. The RCCS provides an alternate means of heat removal from the reactor system to the environment when neither the Main Heat Transport System nor the Shutdown Cooling System are available. A passive approach fulfills these functions. Natural circulation moves water through the inlet headers to the panel wall heat exchangers in the reactor cavity. The water returns via the outlet headers to the water storage tanks.

The RCCS is a relatively simple system that relies on radiation, conduction and convection to transfer heat away from the RPV. Development is needed to characterize these heat transfer mechanisms and possible degradation during prolonged operation. Specifically, it is necessary to measure the emissivity of the RPV and RCCS materials, assess the impact of particulates in the reactor cavity on system performance, and potentially validate the system performance in an integrated test.

Main Helium Circulators (formerly referred to as the Primary Gas Circulators)

The NGNP will have two large circulators mounted in the Steam Generator Vessels to circulate primary coolant through the Steam Generator and Reactor Core at a flow rate of 282 kg/sec. The circulator technology is mature. Helium will pass through the circulators at 320℃ at the inlet and 325℃ at the outlet. Due to the required flow rate at that temperature, the circulators will conservatively require a power rating of 4 MW_e, which is considered within the state-of-the-art for gas circulators having helium immersed motors.

Development activities identified for the main helium circulators are standard manufacturer's testing. For example, verification testing of the rotating assembly and magnetic bearings and final performance testing in air, which are included for completeness, are both standard manufacturer's activities. The primary technology issue is the verification of circulator performance during an integrated engineering scale demonstration in a relevant environment. This report concludes that testing of the circulator and circulator shutoff valve be conducted in air at conditions relevant to the Main Heat Transport System.

Circulator Shutoff Valve

Each helium circulator is equipped with a self-actuating shutoff valve located at the impeller inlet. Its function is to minimize backflow through the primary coolant loop when the circulator is shut down. The valve is designed to close if the circulator stops (due to malfunction, shutdown for maintenance, etc.). The envisioned shutoff valve is a flapper butterfly valve. When the circulator is operating, differential pressure across the valve, created by the flow of helium through the circulator, will open the valve. A gravity-operated counterweight will close the valve.

Flapper valve technology is mature, having been installed and operated on previous nuclear power plants. However, testing must include an integrated test with the circulator to ensure proper behavior of the system and the passive operation of the valve. It is expected the valve will be designed, procured, and tested by the circulator vendor.

Hot Duct (formerly referred to as the Primary Hot Gas Duct)

A Hot Duct (HD) is used to transport helium coolant between the reactor and the Steam Generators. The HD is located internal and coaxial to the Cross Vessel and is a multi-layered insulated assembly that allows for the separation of hot and cold primary coolant within a single vessel. Hot helium coolant (750℃) from the core travels within the interior of the Hot Duct while cold helium coolant (325℃) returns to the core in the annulus located between the outer side of the HD and the inner wall of the Cross Vessel.

The HD technologies have been demonstrated in Germany at the KVK test loop. A hot gas duct with a ceramic composite (C/C) liner was tested for more than 5,000 hours at temperatures up to 950℃. Metallic and graphite liners were also demonstrated. However, the NGNP HD will be larger to accommodate a greater coolant flow rate. The larger size may impact manufacturability and performance. Therefore, the recommended technology development actions are to qualify the manufacturing process, develop an analytical model to predict HD for performance, and perform an engineering scale demonstration of the unit.

Steam Generator

The Steam Generator concept for the NGNP is a helical tube heat exchanger with a superheater and possibly a reheater. The NGNP includes two 50% capacity Steam Generators. The primary side is helium. The secondary coolant is water. The helium enters the shell side of the Steam Generator at 750ºC and exits at 320ºC at a flow rate of 141 kg/sec. The coolant feedwater enters the tube side of the Steam Generator at 281ºC and exits as steam at 566ºC at a flow rate of 141 kg/sec. The Steam Generator makes use of different metals (2.25Cr1Mo and Alloy 800H) depending on the local conditions of operation.

There is high confidence the Steam Generator can be designed and manufactured to meet NGNP requirements. One technology development action, an engineering scale test, has been identified. Additionally, several other beneficial test activities have been identified, including qualification of the vendor's bimetallic welding process and development of the component manufacturability.

Primary Loop Instrumentation

Sensor input forms part of the Plant Protection and Control System. Sensors are needed for measuring flow rate, reactor cold leg temperature, reactor hot leg temperature, pressure, and moisture. Sensor signals provide input to the Plant Protection System, Plant Control System and Plant Monitoring System.

The required input measurements, sensor environment, and sensor requirements for each instrument will be determined in detail during the NGNP conceptual design. Based on preliminary information, no technology development actions have been identified. Qualification testing of instruments has been recommended and development activities may be needed if the actual sensor environment or requirements vary greatly from those in this study.

Fuel Handling System

The Fuel Handling System (FHS) consists of a series of machines and devices capable of transferring fuel and reflector blocks between the Reactor Core and the Near Reactor Spent

Fuel Storage location. The system is based on previous system designs, with the exception of a Fuel Storage Server (FSS) instead of Fuel Transfer Casks. The FSS reduces the estimated refueling time. The basic technology is similar to that demonstrated at Fort Saint Vrain.

Due to extensive operation in the past, the FHS is considered mature technology. However, confirmatory testing is recommended for the commercially available seals, bearings, and lubricants prior to installation in the NGNP. Furthermore, because the FHS has a large impact on refueling efficiency, functional and long-term endurance tests are recommended on the subcomponents to validate reliable performance.

Steam Reboiler System

The conventional steam cycle concept for the NGNP includes two reboilers that transfer heat from the extraction side of the Power Conversion System steam turbines to a process heat transfer loop. Reboilers are commonly used in the chemical process industry to heat distillation columns or to recover waste heat. In both cases, the working fluid on the process heat side returns as liquid, contacts the heat transfer surface, and vaporizes. Most reboilers are shell and tube heat exchangers and are steam-heated, although other configurations are also used. The service conditions for the NGNP process heat loop are less severe than most applications (e.g., corrosive chemicals). This technology is mature and does not require technology development for implementation in the NGNP.

2.0 ACRONYMS

ASME	American Society of Mechanical Engineers
BEA	Battelle Energy Alliance
BOP	Balance of Plant
C/C	Carbon/Carbon
CR	Control Rod
CRDM	Control Rod Drive Mechanism
CV	Cross Vessel
DDN	Design Data Need
DOE	United States Department of Energy
FA	Fueling Adaptor
FE	Fuel Elevator
FHM	Fuel Handling Machine

FHS	Fuel Handling System
FSS	Fuel Storage Server
FSV	Fort Saint Vrain
GT-MHR	Gas Turbine Modular Helium Reactor
HD	Hot Duct
HTGR	High Temperature Gas-cooled Reactor
HTS	Heat Transport System
HTTR	High Temperature Test Reactor
I&C	Instrumentation and Control
IHX	Intermediate Heat Exchanger
INL	Idaho National Laboratory
ISI	In-Service Inspection
KVK	Component Test Loop (German)
LSFS	Local Spent Fuel Storage
LWR	Light Water Reactor
MHI	Mitsubishi Heavy Industries
MHTGR	Modular High Temperature Gas-cooled Reactor
MPa	Megapascal
MW_e	Megawatt electric
N/A	Not Applicable
NGNP	Next Generation Nuclear Plant
NHSS	Nuclear Heat Supply System
NQA	Nuclear Quality Assurance
NRC	Nuclear Regulatory Commission
ORNL	Oak Ridge National Laboratory
PASSC	Plant, Area, System, Structure, & Component

PCDR	Preconceptual Design Report
PCS	Power Conversion System
PIRT	Phenomena Identification and Ranking Table
PNNL	Pacific Northwest National Laboratory
PRA	Probabilistic Risk Assessment
PSR	Permanent Side Reflector
R&D	Research & Development
RAB	Reactor Auxiliary Building
RAMI	Reliability, Availability, Maintainability, Inspectability
RCCS	Reactor Cavity Cooling System
RPV	Reactor Pressure Vessel
SFSS	Spent Fuel Storage System
SGV	Steam Generator Vessel
SG	Steam Generator
SiC/SiC	Silicon Carbide/Silicon Carbide
TDRM	Technology Development Road Map
TP	Test Plan
TPS	Top Plenum Shroud
TRL	Technology Readiness Level
UCR	Upper Core Restraint
VS	Vessel System

3.0 INTRODUCTION

The US Department of Energy (DOE), through the NGNP project, is developing a High Temperature Gas-cooled Reactor (HTGR) to be used as a heat source for a variety of process heat applications (e.g.,hydrogen production, coal to liquids, tar sands oil recovery, electricity cogeneration, etc.). Currently, this HTGR is envisioned as providing a reactor outlet temperature of 750 - 800 ºC and being operational by 2021. In order to meet these ambitious

goals, a focused R&D initiative is required. In the current scope of work, AREVA has updated the initial Technology Development Road Maps (TDRMs) and associated initial Test Plans (TPs) for the NGNP critical Plant, Area, Systems, Structures, and Components (PASSCs). In performing this revision, AREVA focused on the PASSCs that are currently part of its baseline design for an HTGR with a 750ºC outlet temperature operating on a conventional steam cycle, shown schematically in Figure 1-1.

This work included the review and incorporation of previous AREVA NGNP pre-conceptual and conceptual design work to date. The road maps are expected to drive the needed actions to down-select the configuration and designs for the Component Test Facility (CTF) to be built at the Idaho National Laboratory (INL). The CTF will be a critical program component to demonstrate NGNP technologies and design readiness through testing, piloting, and prototyping. The CTF will also support the development of future Very High Temperature Reactor Systems at temperatures beyond 750℃. The depth and breadth of each TDRM has been developed to a sufficient level of detail to begin the initial conceptual design development of the CTF test loops. Future refinements to the TDRMs and TPs will be necessary to address the specifics of the component maturation process without causing major modifications or obsolescence of the CTF.

This document presents the road mapping process used to generate initial TDRMs and the results of the work. Since a final selection of the NGNP configuration and operating conditions has not been made, the TDRM task focused on the current reference configuration used by AREVA. The initial TDRM was based on conceptual design studies performed in early FY-2008 for a system with an intermediate gas loop driving a steam cycle and a reactor outlet temperature of 900ºC [1]. This TDRM is based on consideration of a less aggressive HTGR system with an outlet temperature of 750℃ and a co nventional steam cycle [4].

4.0 SCOPE

The TDRM effort focuses on the NHSS, HTS, PCS, and reactor support systems areas. The process heat applications are outside the scope of this document. The level of detail in this document is limited by the current state of the NGNP design. The best purpose of the current work is to establish a baseline process by which R&D within the NGNP program can be monitored and controlled. The TDRMs developed here will require review and update on a regular basis as increasing levels of detail are developed during design activities for the NGNP.

5.0 METHODOLOGY

This section outlines the methodology used to develop the information contained in this report. The methodology is as follows:

1) Establish baseline TRL scores

2) Establish critical PASSC list

3) Develop Decision Discriminators for each PASSC

4) Identify down-select tasks if more than one option is carried forward

5) Determine technology maturation tasks

6) Document the Decision Discriminators, down-select tasks, and technology maturation tasks on a Technology Development Road Map

7) Develop a test plan for each TRL step change for each PASSC

The following subsections provide detailed descriptions of the methodology process steps.

5.1 Establish Baseline TRL Scores

Baseline TRL scores for the 750℃ NGNP conventional steam cycle configuration were determined by assessing the PASSCs previously identified as critical in the earlier version of this report (900℃ NGNP with the steam cycle connec ted to the reactor through an intermediate gas loop) for the current baseline operating conditions [4] to determine which require further technology development. A TRL score was also determined for the Steam Reboiler System included in the baseline NGNP conventional steam cycle configuration. Once all PASSCs were identified, each was assessed individually, using engineering judgment, as to whether or not it needed development in order to be ready for integration into the NGNP.

The TRL definitions provided by Battelle Energy Alliance (BEA) and used to determine the TRL level of a component are shown in Table 5-1. The TRL definitions are not specifically tailored for each PASSC in order to maintain consistency across the NGNP. However, a strict interpretation of the definitions is not always possible when assigning TRL scores and during the process of TRL progression. In some instances, the action progressing an item to the next TRL level may be an analytical analysis of a new configuration, a scale up, or an operational environment. A strict interpretation of the TRL definitions would preclude progression because the TRL score increases only with physical phenomena, larger scale testing, increasingly relevant environment testing, or increasingly integrated testing. In discussions with BEA personnel, it was clear that analytical methods are also an acceptable way of demonstrating increasing levels of technology readiness, especially when the physical phenomena being modeled are well understood.

Table 5-1: TRL Definitions

Rating Level	Definition	Abbreviated Definition
1	Basic principles observed and reported in white papers, industry literature, lab reports, etc. Scientific research without well defined application.	Basic principles observed
2	Technology concept and application formulated. Issues related to performance identified. Issues related to technology concept have been identified. Paper studies indicate potentially viable system operation.	Application formulated

Rating Level	Definition	Abbreviated Definition
3	Proof of concept: Analytical and experimental critical functions and/or characteristic proven in laboratory. Technology or component tested at laboratory scale to identify/screen potential viability in anticipated service.	Proof of concept
4	Technology or component is tested at bench scale to demonstrate technical feasibility and functionality. For analytical modeling, use generally recognized benchmarked computational methods and traceable material properties.	Bench scale testing
5	Component demonstrated at experimental scale in relevant environment. Components have been defined, acceptable technologies identified and technology issues quantified for the relevant environment. Demonstration methods include analyses, verification, tests, and inspection.	Component verified at experimental scale
6	Components have been integrated into a subsystem and demonstrated at a pilot scale in a relevant environment.	Subsystem verified at pilot scale
7	Subsystem integrated into a system for integrated engineering scale demonstration in a relevant environment.	System demonstration at engineering scale
8	Integrated prototype of the system is demonstrated in its operational environment with the appropriate number and duration of tests and at the required levels of test rigor and quality assurance. Analyses, if used, support extension of demonstration to all design conditions. Analysis methods verified and validated. Technology issues resolved pending qualification (for nuclear application, if required). Demonstrated readiness for hot startup.	Integrated prototype tested and qualified
9	The project is in final configuration, tested and demonstrated in operational environment.	Plant operational
10	Commercial-scale demonstration is achieved. Technological risks minimized by multiple units built and running through several years of service cycles.	Commercial scale – multiple units

5.2 Establish Critical PASSC List

Only PASSCs requiring development are considered critical. The TRL analysis is in [9]. The analysis resulted in the following critical PASSC list:

- Nuclear Heat Supply System
  - Reactor Internals
  - Reactor Core
  - Control Rod Drives
  - Reactor Cavity Cooling System

- Main Heat Transport System
  - Main Helium Circulator
  - Circulator Shutoff Valve
  - Hot Duct
- Power Conversion System
  - Steam Generator
- Other Reactor Support Systems
  - Primary Loop Instrumentation
  - Fuel Handling System

5.3 Develop Decision Discriminators

The decision discriminators for each PASSC serve either one or both of two purposes. First, they may provide the most significant parameters upon which to base a technology down-selection decision that occurs when technologies are at a low state of maturity and substantial decisions remain to be made (e.g.,choice of materials). Second, decision discriminators may be used to document the types of parameters used to make a past technology selection. In this case, direct superposition of the TDRM process on past decisions may be difficult because decisions may have been made based on other processes. In either case, these parameters typically cover relevant concerns such as performance, cost, Reliability, Availability, Maintainability, Inspectability (RAMI), and risk.

5.4 Identify Down-Select Tasks

Down-select tasks are activities that will generate (or already have generated) the data needed for obtaining measurable values for each of the decision discriminators for each PASSC. In cases where down-selection has already been made, these tasks either may or may not have been captured in documentation, some of which may be proprietary.

5.5 Determine Maturation Tasks

Maturation tasks were determined by reviewing work done thus far, assessing the current level of maturity, and determining tasks which will increase the maturity to a level ready for integration in the NGNP. These maturation tasks may cover the range of simply retrieving data from another development plan, to performing analytical calculations, and up to performing detailed fundamental material and integrated component tests. Maturation tasks are identified to bring each technology to a TRL of 7, which is considered to be the level necessary for installation of the PASSC into the NGNP.

5.6 Develop Test Plans

Test plans were developed to provide the details for each technology maturation task. The test plans include the following information about each test:

- What tests are required as part of the maturation task
- Why the test is important
- What the critical parameters are to be measured, both on the component being tested and within the test rig where the testing is conducted
- An estimate of the duration and schedule for the testing
- A preliminary indication of where the testing should be conducted

In regard to the schedules developed for the testing, several key points were considered. First, schedules were developed by taking an aggressive approach to the R&D needed. This approach was considered to be necessary at this stage to meet the NGNP start date of 2021. Second, schedules were developed based on AREVA's experience as an engineering company. Experience shows substantial benefit can be gained by a collaborative working arrangement between industry, national laboratories, and R&D organizations. Last, the schedules developed in the test plans should be viewed as preliminary until they are integrated into the NGNP project schedule and interactions between design development and test activities are assessed. The updated test schedules should be used to update the NGNP program schedule.

Costs for the technology development work were provided as part of the AREVA PCDR [3]. Further refinement of these cost estimates will require more detailed information about component configuration and design than is available at this stage. Interaction with research institutions familiar with the performance of testing on similar scales and scopes (e.g., large scale testing and material qualification) would facilitate refinement of these estimates. The updated costs for the technology development of the 750℃ conventional steam cycle NGNP should be used to update the cost estimate for the NGNP program.

6.0 CRITICAL PASSC TECHNOLOGY DEVELOPMENT

6.1 Nuclear Heat Supply System (NHSS)

6.1.1 Reactor Internals

A description of the Reactor Internals, including technical maturity and the development needs, is provided in the following subsections. Test plans for the Reactor Internals are in Appendix A and the TDRM sheet is in Appendix K.

6.1.1.1 Description

Reactor Internals include components that provide the structural interface between the Reactor Core and the Vessel System and components that provide for helium routing between the Reactor Core and the Main Heat Transport and Shutdown Cooling Systems. In addition to providing structural support and directing helium flow, other major functions of the Reactor Internals include thermal and radiological shielding of the Reactor Pressure Vessel, conservation of neutrons during power production, and serving as a key link in the conduction cooldown radial heat transport path.

6.1.1.1.1 Upper Core Restraint

The Upper Core Restraint (UCR) limits the movement of the replaceable reflector and fuel columns at the upper end of the Reactor Core and provides for the flow of primary coolant into the active core. The UCR is an assembly of interlocking pieces formed of either a high temperature metallic alloy or a composite material. Each hexagonal UCR component interfaces with dowels on the upper surfaces of three adjacent reflector elements, fixing their positions relative to each other at the top end. The UCR components also interlock with each other to form a semi-rigid structure over the top of the Reactor Core components. The UCR components include through-thickness holes that channel helium coolant flow from the upper core inlet plenum to the replaceable reflector elements above the active core.

6.1.1.1.2 Permanent Side Reflector

The graphite Permanent Side Reflector (PSR) system serves as the radial transition interface between the exterior of the hexagonal Reactor Core system components (fuel elements and replaceable reflectors) and the interior of the circular core barrel. The PSR extends axially from the lower side of the UCR to the top of the underlying components of the graphite core support. The PSR design is an array of graphite blocks of varying sizes and shapes. The blocks are keyed vertically with dowels and are overlapped to minimize helium bypass flow. The PSR limits movement of the Reactor Core and transfers structural loads (notably seismic) between the replaceable reflector elements that surround the active core and the core barrel. Another key function of the PSR is to reflect and conserve neutrons to facilitate the nuclear reaction for heat generation. The PSR in conjunction with the core barrel is designed to minimize helium bypass of the Reactor Core. It also provides radiological shielding. A subset of the graphite blocks contains boron carbide materials for shielding purposes to limit the neutron fluence seen by the reactor vessel.

6.1.1.1.3 Permanent Bottom Reflectors

The graphite Permanent Bottom Reflectors are part of the Graphite Core Support Structure and constitute a transition region below the PSR and the bottom replaceable reflector elements. They collect and channel the helium exiting the core to the Core Outlet Plenum. Protection against neutron exposure will be ensured by inserting boron carbide rods inside one row of the blocks.

6.1.1.1.4 Core Outlet Plenum

The Core Outlet Plenum is the part of the Graphite Core Support Structure that transfers axial loads from the PSR and core assemblies to the metallic core support structure below. The plenum is formed by an array of support posts between the upper transition floor and the lower insulating layer. The arrangement of the posts and transition blocks is such that the axial load from any given fuel or replaceable reflector column is shared by multiple posts.

6.1.1.1.5 Lower Floor

The Lower Floor is the part of the Graphite Core Support Structure that protects the metallic plate located below it against neutron exposure and high temperature. The Lower Floor consists of a graphite layer thick enough to protect the metallic parts against neutron exposure.

The thermal protection of the Metallic Core Support is provided by a set of ceramic plates located below the graphite. Its thickness will depend on the efficiency of the material selected.

6.1.1.1.6 Core Barrel

The Core Barrel is a double-wall metallic cylinder that is open at the top (where it supports the top plenum structure) and attached to the metallic core support structure at the bottom. The inner cylinder is the principal structural member of the core barrel assembly. The outer cylinder establishes an annular passage for helium flow. Flanges at either end provide stiffening, a mounting for the outer cylinder shell, and a means of bolting the four sections together in the field.

6.1.1.1.7 Metallic Core Support

The Metallic Core Support (MCS) structure serves as an axial support structure and flow channeling device. The vertical shell of the support structure has two concentric annular flow channels. The outer channel communicates with return (cold) helium flow from the Cross Vessel annulus surrounding the Hot Duct. This flow is directed to the lower plenum of the support structure. From there, the flow enters the upper plenum of the support structure through holes in the metal plate separating the two plena and through an annular opening at the exterior of the vertical cylindrical shell that encloses the interface with the Shutdown Cooling System Heat Exchanger. From the upper plenum, the flow enters the inner annular passage of the vertical shell, which communicates with the core barrel flow annulus above. The multi-plenum structure of the metallic core support is designed to provide a uniform flow distribution of helium around the circumference of the structure at its interface with the core barrel at the upper end.

6.1.1.1.8 Top Plenum Shroud Structure

The Top Plenum Shroud (TPS) structure is connected to the top end of the MCS and Core Barrel to form the inlet plenum of the reactor. The TPS is an inner structural shell with external stiffening ribs. An outer shell contains the combined thermal and radiation shielding material that resides in the enclosed space within. Penetrations are provided for the Control Rod Drives which are needed during normal operation. These same penetrations are also used during refueling for fuel manipulation equipment and for other maintenance equipment employed during outages. In normal operation, the main helium flow exits the core barrel annular channel and enters the plenum formed by the MCS and the TPS. Flow outside the TPS is essentially stagnant to reduce parasitic heat losses.

The Reactor Internals are depicted in Figure 6-1.

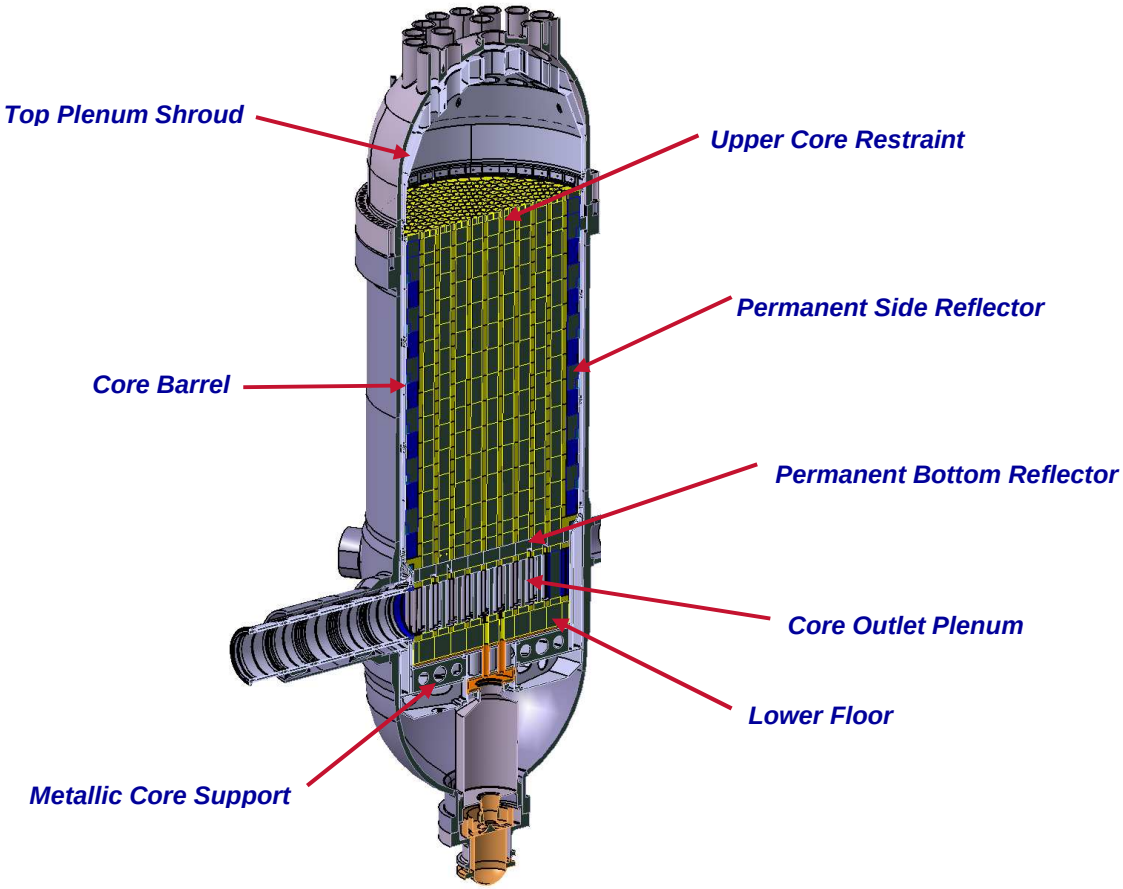

Figure 6-1: Reactor Internals

6.1.1.2 Technical Maturity

Reactor Internals subcomponents are divided into the following three main groups of materials: metallic components, graphite components, and composite components. The metallic Core Barrel, Metallic Core Support, and Top Plenum Shroud (metallic/ceramic) components are mature technology, requiring little or no technology development prior to use. The Permanent Side and Bottom Reflectors and Core Outlet Plenum are graphite components that require qualification of a new graphite source to replace the grade H451 graphite used in older reactors. The Upper Core Restraint may be either a metallic (Alloy 800H) or a composite component. If it is a composite component, it will require significant development prior to use. The Lower Floor blocks may be either a ceramic/composite component that would require significant development prior to use, or a graphite/ceramic component, which would require graphite qualification.

The assessment of technical maturity is summarized in Table 6-1.

Table 6-1: Reactor Internals Technical Maturity Assessment

Component	Materials	Maturity Assessment
Top Plenum Shroud	Metallic/ Ceramic	Mature technology – no development required
Upper Core Restraint	Composite or Metallic	Mature if metallic – Alloy 800H Significant development required for composite
Permanent Side Reflector	Graphite	Mature technology – requires new graphite qualification
Permanent Bottom Reflector	Graphite	Mature technology – requires new graphite qualification
Core Outlet Plenum	Graphite	Mature technology – requires new graphite qualification
Lower Floor	Ceramic Composite or Graphite	Significant development required for ceramic composite material Graphite qualification required for graphite material
Metallic Core Support	Metallic	Mature technology – no development required
Core Barrel	Metallic	Mature technology – no development required

6.1.1.3 Technology Development Needs

Development needs for Reactor Internals technology include the selection of a material design for the Lower Floor Blocks, the qualification of a new graphite supply to replace the historical H451 graphite grade, and the selection and qualification of a composite design for components requiring such material.

A recommended material for the Lower Floor Blocks has not yet been selected. The eventual choice must meet key design requirements that include providing adequate axial and lateral support for the core and reflectors, and adequate thermal and neutron protection for the Metallic Core Supports and lower Reactor Pressure Vessel. A single material composition is preferred, but it is recognized that a layered structure may be required to meet diverse needs. Material choices currently under consideration include graphite, ceramics, and composites.

Qualification of a graphite grade to replace H451 is the subject of an ongoing INL/NGNP development program. The TDRM process will reference this program in appropriate development plans and specify no additional graphite development actions.

Specific selection and qualification activities for each composite material component will be developed separately for each component due to the design-dependent nature of composite material properties. Generally, the required material testing will include room temperature tests, operating temperature tests, and accident temperature tests in both air and helium atmospheres. Additionally, some tests will also consider irradiation behavior. To fully qualify a single component, many thousands of samples will be required to meet statistical qualification criteria.

The TDRM tasks required for technology maturation are captured in Figure K-1.

6.1.2 Reactor Core

A description of the reactor active core design features, including technical maturity and development needs, is provided in the following subsections. Test plans for the Reactor Core design features are in Appendix B and the TDRM sheet is in Appendix K.

6.1.2.1 Description

The Reactor Core is an annular arrangement of prismatic fuel and reflector elements located within a permanent graphite reflector. The annular core configuration is adopted to achieve a maximum power rating and still permit passive core decay heat removal while maintaining an acceptable fuel temperature distribution. The core design is illustrated in Figure 6-2 and Figure 6-3.

The annular active core has 1020 fuel elements stacked in 102 columns 10 fuel elements tall, roughly making up three rings of 30, 36 and 36 columns, respectively. Among these 102 columns, 30 have a dedicated channel for the introduction of a neutron absorber, of which 12 are dedicated to startup control rods and 18 are dedicated to the reserve shutdown system. Replaceable reflector columns are arranged in the inner and outer zones of the core annulus and have 61 and 102 columns, respectively. Among the 102 columns of the outer reflector arrangement, 36 have a dedicated channel for the introduction of a control rod.

The basic core element is a hexagonal graphite block with the following main features:

- A hole in the center of the top face for coupling with the Fuel Handling Machine grip.
- Guide sockets and guide dowels on the bottom face and top face, respectively, intended to provide alignment for refueling and coolant channels, and transfer of mechanical loads between fuel elements. Their number and location depend on the type of assembly.
- Beveled top and bottom edges of the elements to assist insertion into the core.
- Graphite material type candidates the same as those envisioned for the Reactor Internals (NBG-17 and PCEA).

There are different types of elements in the core structure depending on their function and location. These elements include the following:

- Fuel elements that contain blind holes for fuel compacts and full length channels for the helium coolant flow.
- Non-fuel elements that are graphite blocks located in the radial and axial reflector regions surrounding the core. They have different design features and height depending on their location.

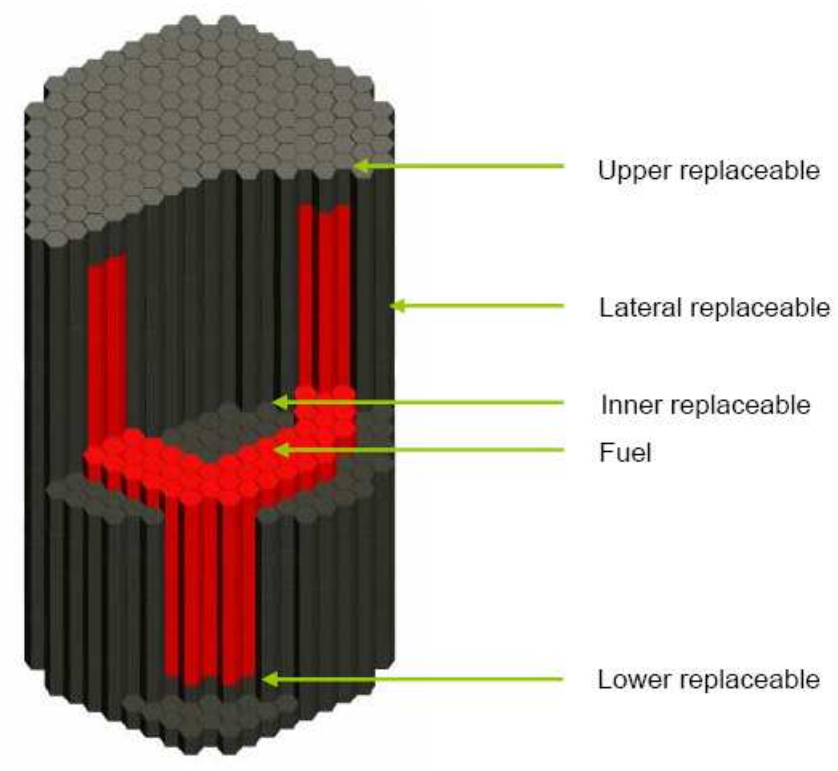

Figure 6-2: Annular Prismatic Core Design

6.1.2.2 Technical Maturity

Extensive experience with the prismatic block design provides confidence in the basic design of the Reactor Core fuel and reflector blocks. An assessment of the availability of the manufacturing technology that existed for similar designs (e.g., Fort Saint Vrain) is needed. If the technology is still available, then it must be assessed for applicability in the NGNP. If it is no longer available, the manufacturing processes needed for producing finished fuel and reflector blocks must be established. These processes include those for machining the holes for the coolant, fuel, and neutron absorber with acceptable tolerances at a reasonable throughput rate.

The annular design is based upon previous designs, such as GT-MHR, developed over a number of years. However, an annular prismatic core has never been demonstrated in operation. One item of concern, the neutronic behavior of the core, needs to be characterized and may be achievable by benchmarking against previous cores such as FSV or HTTR. Otherwise, critical testing may be required. Other potential issues include control rod worth, radial peaking, and temperature coefficient prediction, which may be tested on a smaller mock-up. Additionally, there is the possibility of azimuthal instabilities, which will need to be assessed during design activities and will depend upon the availability of data from FSV and HTTR. Critical testing of the core geometry will be difficult and may require facilities that presently do not exist.

The concept of including burnable poison in the HTGR core to limit power peaking is new and has not been demonstrated in an operating HTGR. An analysis assessing the burnable poison options is needed in order to determine the relative performance of the various options and the technology development that would be required with each one. The main options now being considered are discrete poison compacts, discrete poison wafers between fuel concepts, and burnable poison mixed with the fuel in fuel compacts. The neutronic and mechanical performance of these options will need to be characterized by further analysis or by physical testing.

The available database of isotopic cross sections may not be sufficient for a moderated core operating at high temperatures. A review of the available databases must be performed to assess their adequacy for use in designing the NGNP. If new cross sections are needed, then development work will be necessary.

The graphite used in the FSV reactor is no longer available. New grades of graphite are being developed, tested, and qualified. The development of the fuel and fuel compacts and the nuclear grade graphite is being addressed in ongoing programs.

In summary, at the current state of design and based on past experience, there is high confidence that the annular core with prismatic blocks will meet all requirements for safety, licensing, and operation of the NGNP at the operating parameters. There are some areas, as outlined above, where data may exist that will aid the design of the NGNP. If such data is unavailable to the Control Rod Drive designer during the design phase, then additional test work may be identified to fill data gaps. However, it is too early to arrive at an accurate assessment of where such data gaps exist.

6.1.2.3 Technology Development Needs

At this stage, the following development needs are identified, but more needs may be uncovered during design activities:

Qualification of nuclear grade graphite – The physical, thermal, and mechanical properties of the graphite must be determined as a function of temperature and neutron fluences over the expected conditions of the core.

Structural performance of core blocks – It must be demonstrated that the blocks will not be damaged during loading and unloading maneuvers and that the alignment pins will survive stresses induced by seismic loads.

Bypass flow – The bypass flow is a key parameter and is a complex value to determine. Bypass through the gaps between block columns and in the horizontal gap between the blocks within a column must be characterized. This must be done under cold and hot conditions with blocks that simulate both unirradiated and irradiated conditions.

Thermomechanical performance – The stresses the blocks will experience due to thermomechanical stresses may be close to the structural limits of the graphite material. Testing is needed to quantify the stresses that will be generated in the block during operation.

The TDRM tasks required for technology maturation are captured in Figure K-2.

6.1.3 Control Rod Drives

A description of the Control Rod Drives system, including technical maturity and development needs, is provided in the following subsections. Test plans for the Control Rod Drives system are in Appendix C and the TDRM sheet is in Appendix K.

6.1.3.1 Description

The Control Rod Drives system provides for controlling the reactivity rate within the Reactor Core. As illustrated in Figure 6-3, the Control Rod Drives equipment includes 12 start-up control rods located in the inner ring of fuel blocks and 36 operating control rods located in the inner ring of the outer graphite reflector. The Control Rod Drives also include guide tubes and the control rod drive mechanism (CRDM) to properly position the control rods in the core. The CRDM includes a cable, drum drive, position indicator, and cable force sensor.

As illustrated in Figure 6-4, the control rods are a string of approximately 18 annular canisters with articulating joints between adjacent canisters. The canisters are constructed with cladding on the inside and outside to contain annular compacts of the boron carbide absorber material. The cladding is vented so any helium generated by the neutron absorbing process discharges into the helium coolant. Thus, there is no pressure boundary in the control rod assembly. The articulating joint design allows the control rod assembly to act like a chain, permitting the assembly to flex around bends in the channels within the columns of graphite blocks. A cable connected to the CRDM runs through the center of the string of canisters and provides the primary axial support. The three candidate materials for the control rod cladding, end caps, and articulating connectors are: Alloy 800H, C/C composite, and SiC/SiC composite. A decision on the material to be used for the control rod canisters and connectors will be required.

The guide tubes are located in the upper plenum and extend from the Control Rod Drive stand pipes to the top reflector blocks within the Reactor Core. The tubes protect the control rod assemblies and guide them into channels within the designated fuel and reflector blocks in the core. The two material options being considered for the guide tubes are: Alloy 800H and C/C composites. A decision between these two materials will need to be made.

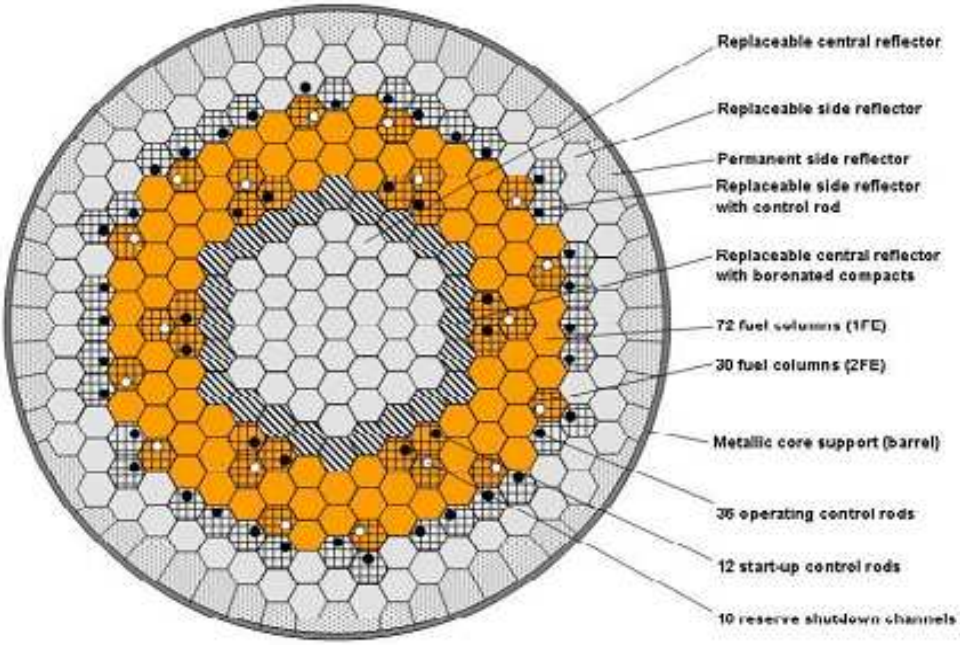

Figure 6-3: Core Layout

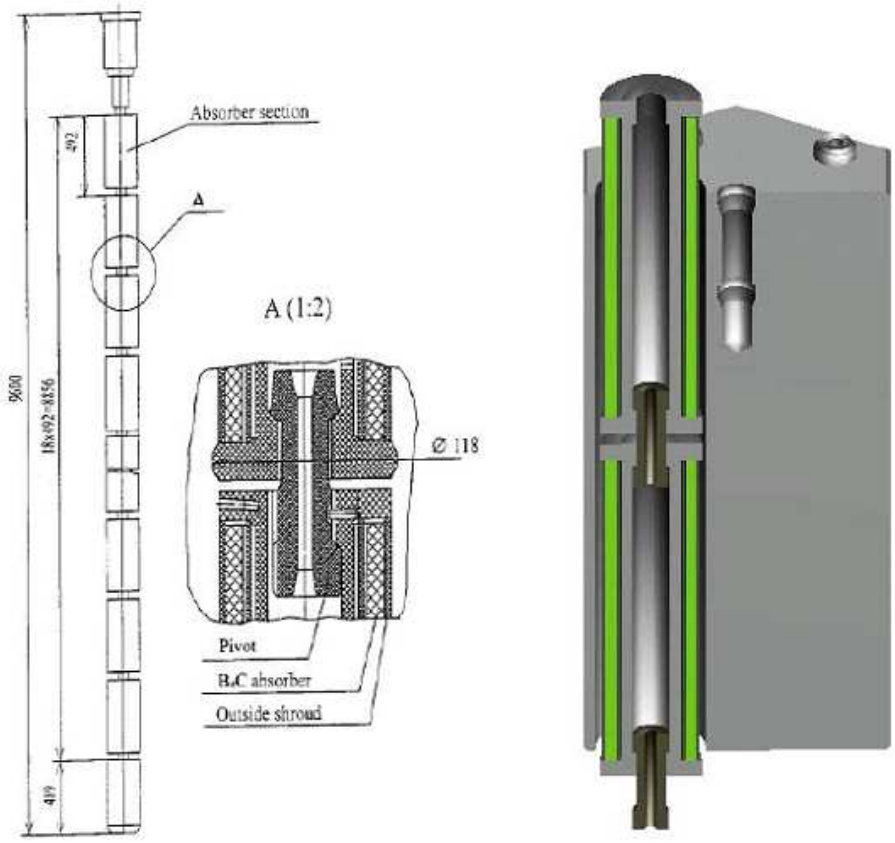

Figure 6-4: Segmented Control Rod Design

6.1.3.2 Technical Maturity

There is much experience with control rod systems. Therefore, the technology is mature. However, due to the higher temperatures that will be experienced in the NGNP and the need to address some issues identified during past operation, technology development is needed in a few areas. A full assessment of the technology development actions will be possible once a better understanding of the in-core temperatures and the temperature distribution is obtained in the design process.

Some iteration between design and technology development will exist for this PASSC. For example, it is possible to use Alloy 800H control rods, which are mature technology, if the control rods are cooled by providing bypass flow to the channels. From a design standpoint, it would be preferable not to use bypass flow to cool control rods, but it is feasible if necessary.

The primary issue with the technical maturity of this system is with the materials for high temperature operation. If control rods are to be inserted in uncooled channels, then extensive use of composite materials (C/C, SiC/SiC) will be necessary for the control rod cladding, canister joints, and control rod guide tubes. Development of these materials requires a progression from tests that start with fiber and matrix materials, advance to small sample tests followed by representative geometry tests, and then culminate in complete representative component tests.

6.1.3.3 Technology Development Needs

Actions required to mature this technology are as follows:

- Modeling to define maximum normal and off-normal temperatures
- Design analyses to determine Alloy 800H performance envelope in NGNP temperature conditions
- Separate effects testing for C/C and SiC/SiC base materials and composites to obtain data for analyses
- Design analyses for C/C and SiC/SiC composite components
- Further development for selected material to demonstrate control rod elements
- Further actions required to develop a suitable CRDM cable are:
    - Establish design criteria
    - Perform tests for candidate materials at reactor operating conditions

The TDRM tasks required for technology maturation are captured in Figure K-3.

6.1.4 Reactor Cavity Cooling System (RCCS)

A description of the Reactor Cavity Cooling System (RCCS), including technical maturity and development needs, is provided in the following subsections. Test plans for the RCCS are in Appendix D and the TDRM sheet is in Appendix K.

6.1.4.1 Description

The primary functions of the Reactor Cavity Cooling System (RCCS), illustrated in Figure 6-5, are to protect reactor cavity concrete, including RPV supports, from overheating during normal operation. The RCCS provides an alternate means of heat removal from the reactor system to the environment when neither the Main Heat Transport System nor the Shutdown Cooling System are available.

A passive approach fulfills these functions by use of a steel Reactor Pressure Vessel (RPV), whose cylindrical walls are not insulated, providing a heat transfer path for removing decay heat. During normal operation, heat lost through the uninsulated vessel is extracted by the ventilation systems and by the cavity cooler of the RCCS. During normal shutdown, decay heat is removed through either the Main Heat Transport System or the Shutdown Cooling System. In the event these paths are unavailable, decay heat is transferred by passive means through the RPV to RCCS panels. For example, during a depressurized conduction cooldown event, decay heat is removed by conduction through the graphite reflector, and by radiation and natural convection from the uninsulated part of the RPV.

The cooling systems for the reactor cavity, which receive the heat transferred from the vessel, include the cavity cooler panels. The cavity cooler panels consist of a closed tube wall that surrounds the RPV and functions as an efficient heat sink. The tubes are installed vertically and joined by welding to form a welded membrane panel wall. There are two inlet headers located in the lower section of the reactor cavity and two outlet headers in the upper section. The eight segments of the cavity cooler are bolted in place and the header segments are welded. Each segment is suspended from two points at the top of the reactor cavity. The headers are axially fixed, circumferentially guided, and free to move radially. Expansion loops compensate for thermal axial expansion of the cooling tubes.

Water moves by natural circulation through the inlet headers to the panel wall heat exchangers in the reactor cavity and then returns via the outlet headers to water storage tanks. Heat is removed from the water storage tanks by a dedicated circulating water loop in which there is active forced flow. Heat is transferred in a water-to-water heat exchanger submerged in the water storage tanks. The heat is rejected to the atmosphere via a forced draft water-to-air heat exchanger. If the storage tank heat removal system is unavailable, then water stored in water storage tanks continues to flow by natural circulation to the panel wall heat exchangers. Heat is rejected by vaporizing the water inventory and venting steam through the water storage tanks to the atmosphere.

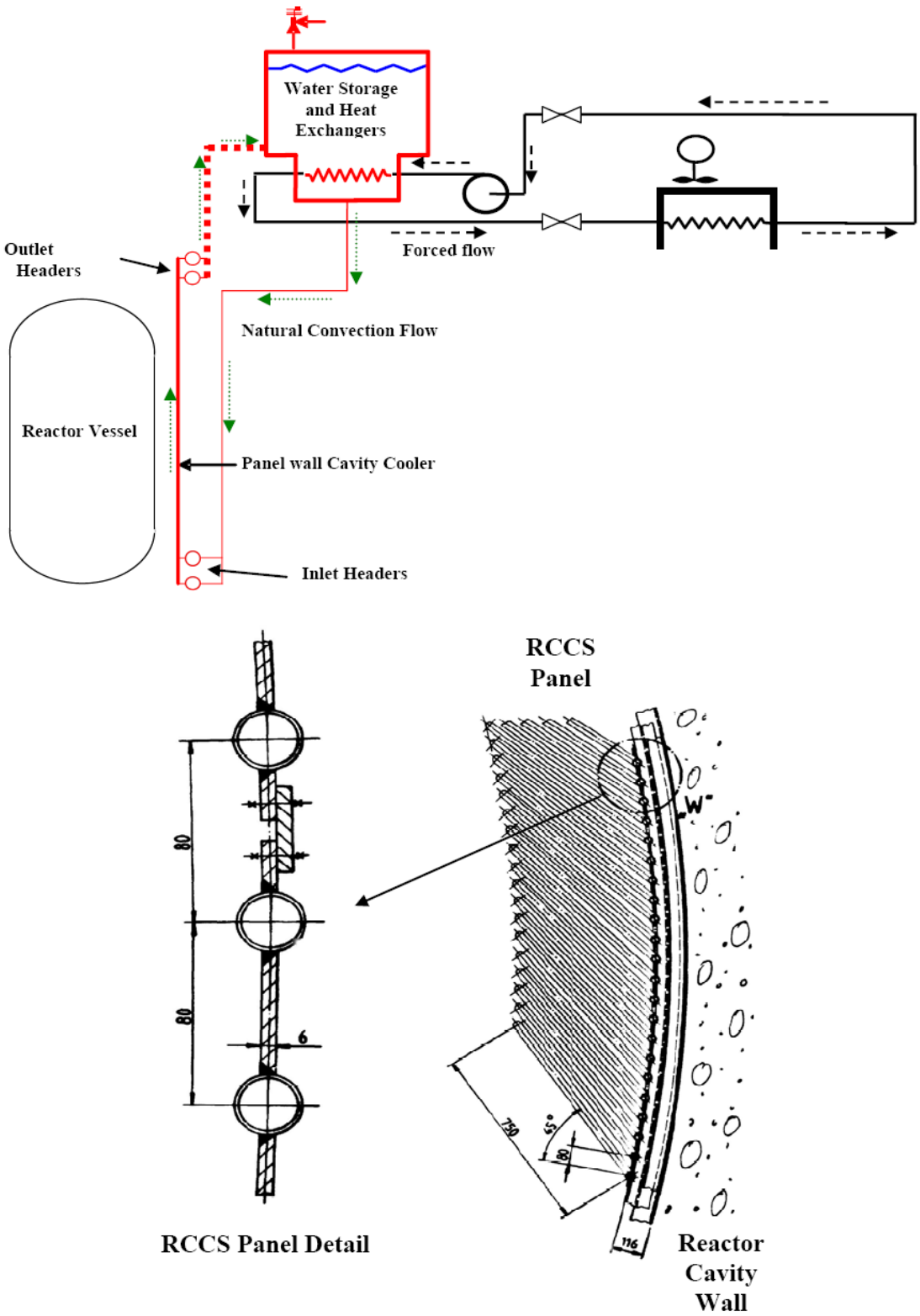

Figure 6-5: RCCS Layout

6.1.4.2 Technical Maturity

The RCCS is a relatively simple system that relies on radiation, conduction, and convection to transfer heat from the RPV. Development is needed to appropriately characterize these heat transfer mechanisms and possible degradation during prolonged operation.

Cooling of the concrete is a key issue. High heat loads in the concrete will reduce the material's strength and can lead to a loss of support for the RPV. Information must be obtained from concrete suppliers and the American Concrete Institute to determine the concrete requirements and capabilities. Air flow between the RPV and RCCS cooler panels and between the RCCS panels and cavity wall also needs to be well characterized.

6.1.4.3 Technology Development Needs

Radiative heat transfer plays a significant role in removing heat from the RPV. The emissivity of the RPV and RCCS panel materials must be fully characterized over the range of conditions experienced during normal and accident operation. Any decrease in emissivity over time or as a result of the presence of particulates in the reactor cavity must also be assessed.

Natural convection within the reactor cavity also plays a significant role in removing heat from the RPV. This complex mechanism requires analytical modeling and may require validation testing.

Heat transferred to the RCCS panels is removed via natural circulation within the tube panels, piping, and the water storage tank. This heat transfer mechanism requires detailed analytical modeling and may require validation testing.

The thermomechanical performance of the RCCS cooler panels is important for defining the lifetime of the RCCS. This performance requires analytical modeling and may require validation testing.

The TDRM tasks required for technology maturation are captured in Figure K-4.

6.2 Main Heat Transport System (HTS)

In this report, the Main Heat Transport System (HTS) includes the primary system required to transfer heat via the primary coolant helium from the Reactor Core to the Power Conversion System (PCS) and the Steam Reboiler System required to transfer heat from the PCS to the process heat user. The NGNP HTS has two parallel heat transfer loops. Each loop includes a Main Helium Circulator, a Steam Generator, and a Hot Duct. The HTS interfaces with the Vessel System (Reactor Pressure Vessel, Cross Vessel, and Steam Generator Vessel) and the reactor system (core and internals). The following sections describe the HTS PASSCs that require technology development. Steam reboilers are a mature technology and do not require further technology development.

6.2.1 Main Helium Circulator

A description of the main helium circulator, including technical maturity and development needs, is provided in the following subsections. Test plans for the Main Helium Circulator are

in Appendix E and the TDRM sheet is in Appendix K. This system was referred to as the Primary Gas Circulator in the previous version of this report for the NGNP with a steam cycle connected to the reactor through an intermediate gas loop [1].

6.2.1.1 Description

The Main Helium Circulator forces primary helium through the Reactor Core and cooling loops. The circulators are conservatively sized based on the coolant pressure drop through the Reactor Cooling System when the reactor is at 100% power. The NGNP pre-conceptual design has two heat transport loops. Each heat transport loop has a single 4 MW_e gas circulator.

The reference gas circulator concept in this report includes the following components:

- Housing
- Impeller
- Diffuser
- Electric motor
- Bearings (electromagnetic and mechanical catcher)
- Rotor
- Inverter

The NGNP pre-conceptual design configuration is envisioned to be similar to the MHTGR primary circulator configuration, in which the gas circulator housing is vertically mounted on the top of the Steam Generator Vessel. The circulator housing bolts to a flange on the top of the Steam Generator Vessel. The impeller and annular diffuser assembly are suspended and engage with the circulator inlet pipe inside the top of the Steam Generator Vessel. The diffuser assembly works aerodynamically with the impeller to convert shaft power into circulator power, which is proportional to the volumetric flow rate and the system pressure drop. The impeller is matched aerodynamically to the diffuser assembly and is vertically mounted on the motor shaft. The impeller will be constructed of Haynes Alloy 718 because of its high creep strength at design temperatures. The gas circulator flow rate is controlled by speed control through an electrical motor inverter. The motor is mounted within the circulator housing and is separated from the circulating hot helium by a thermal barrier. There is a small clearance in this barrier at the impeller level to balance the pressure between the Steam Generator Vessel and motor compartment. The circulator housing includes a water cooling coil (with connections exterior to the pressure vessel) to cool the motor and bearing windings. The cooling water pressure is maintained lower than the helium pressure to ensure any leaks are from the helium side to the water side or exterior. A cooling impeller is mounted on the motor shaft to draw gas through the cooling coils and through channels between both the motor and bearing stators and rotors. The motor rotor and centrifugal impeller are supported by radial and axial magnetic bearings. Mechanical catcher bearings are set to support the rotor in case the magnetic bearings fail. The circulator housing includes mechanical supports and connectors for the motor, bearings, and rotor, as shown in Figure 6-6.

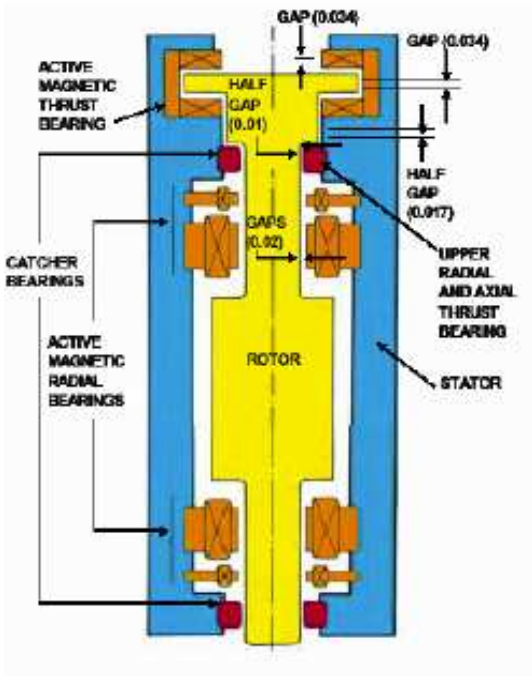

Figure 6-6: Schematic Configuration of the Main Helium Circulator Bearing Configuration

The critical design parameters for the Main Helium Circulator are listed in Table 6-2.

The design temperature will be finalized after more detailed analyses of the design margins during normal load-following, maintenance, and transient conditions.

The Main Helium Circulator interfaces with the Steam Generator Vessel and a Circulator Shutoff Valve installed at its inlet. Other interfaces include the service connections through the circulator housing for electrical power and cooling water supply and the interface with the helium coolant circulating through the reactor.

Table 6-2: Main Helium Circulator Critical Design Parameters

Parameter	Design Value
Outlet Temperature	325°C [normal operations]
Pressure	6.0 MPa
Mass Flow	141 kg/sec helium
Pressure Rise	66 KPa
Power	4 MWe_e
Control Range	30 – 100%
Ramp Rate	10% mass flow/min

6.2.1.2 Technical Maturity

Working with the manufacturer early in the design process is critical. The designer will specify the circulator requirements and the manufacturer will indicate what testing and information is needed to complete the order (e.g., material properties). AREVA has a proprietary conceptual

design that requires confirmatory testing. The TDRM and test plans include typical vendor tests. For example, bearing and rotordynamics, impeller and diffuser aerodynamic efficiency, and acoustic performance are standard manufacturer's tests. The final NGNP circulator assembly will be tested in air at ambient conditions as part of the manufacturer's testing and then integrated with the circulator shutoff valve at normal heat transport system operating conditions as required to achieve TRL 7. AREVA believes the technology is ready for integration into NGNP. There is minimal risk in deferring integrated testing at representative conditions until qualification testing of the NGNP.

Magnetic bearings and catcher bearings sized for a 4 MW_e helium circulator are within the range of commercially available technology. Vendor testing of the bearings in conjunction with rotordynamics testing is standard practice for circulator manufacturers. Design and technology issues about magnetic bearing performance include environmental (helium, temperature) effects , size, temperature, bearing stiffness, and seismic performance. The results of testing in air should allow generation of a model to predict performance in the helium environment because the physical phenomenon (ideal gas law) is well understood and the vendors have analytical models for predicting performance. Integrated circulator system testing in helium will occur during NGNP qualification and operation, where in-service inspection data can be used to collect maintenance and lifetime data.

6.2.1.3 Technology Development Needs

The main item requiring further technology development for the main helium circulator is verification of circulator performance. The TDRM tasks required for technology maturation are captured in Figure K-5.

6.2.2 Circulator Shutoff Valve

A description of the Circulator Shutoff Valve, including technical maturity and development needs, is provided in the following subsections. Test plans for the Circulator Shutoff Valve are in Appendix F and the TDRM sheet is in Appendix K.

6.2.2.1 Description

Each Main Helium Circulator is equipped with a self-actuating shutoff valve located at the impeller inlet. This valve is envisioned to be a flapper valve, which closes:

- in the event of a circulator malfunction,
- if the circulator is shut down for maintenance operations on other HTS structures, or
- when the Power Conversion System is taken off line.

The valve is opened by the aerodynamic flow of gas over the eccentric disk (also referred to as a "flapper"), which rotates on a stem. When in the open position, the valve disk (flapper) is designed to minimize obstruction of flow. The disks are elliptical in shape and have a closing angle of approximately 60 degrees. During circulator operation, torque created by the flow of helium on the disk causes the valve to open fully. A counterweight shuts the valve when flow stops. This action minimizes reverse flow from the Reactor Core when the circulator is not operating. Although some reverse flow is allowable, excessive reverse flow is undesirable because it would allow coolant from the other primary loops or the Shutdown Cooling System

to bypass the core, thereby reducing core cooling efficiency. The valve bearings are not lubricated to prevent lubricant contamination of the HTS. The shape of the disks and housing connectors may disturb the inlet flow and efficiency of the circulator if not properly designed.

The basic butterfly-type valve envisioned for the NGNP is technically feasible and has been used in previous multi-loop gas-cooled reactors. An actuator may be required to assist closing the valve during shutdown and startup when the gas density and pressure are low, especially if the bearings have become stiff. Experience has shown high temperature dry bearings tend to become stiff and unreliable over time. Limited demonstration testing is warranted to ensure proper operation of the valve over the expected plant lifetime.

The design requirements for the Circulator Shutoff Valve are:

- **Normal Conditions:** The Main Heat Transport System normally operates at a temperature of 325ºC, a pressure of 6.0 MP, and a flow rate of 141 kg/sec. The design margin required for valve actuation under normal load following and transient conditions has not been established.

- **Passive Actuation:** A counterweighted design with dry bearings (no lubricants) will be used. The valve will open when the circulator motor starts without causing the circulator to stall and will remain open in forward flow with minimal obstruction to flow. The valve will close within a specified time when circulator motor is turned off. When flow stops the valve will close and remain closed. There is no requirement for positive shutoff of reverse flow.

- **Pressure Drop:** The pressure drop across the valve will be minimized by design but shall be demonstrated to be less than a specified percentage of the circulator pressure head over a range of circulator flows. The maximum pressure rise available from the circulator impellers should ensure that the valve can be passively opened from the fully closed position.

The critical (bounding) design parameters for the Circulator Shutoff Valve are listed in Table 6-3:

Table 6-3: Circulator Shutoff Valve Critical Design Parameters

Parameter	Design Value
Temperature	325 ºC [normal operation]
Pressure	6.0 MPa
Pressure Drop	TBD MPa
Mass Flow	141 kg/sec
Operation	Passive

The Circulator Shutoff Valve interfaces with the circulator inlet and must operate with minimal disturbance of flow to the circulator impeller.

6.2.2.2 Technical Maturity

Butterfly valves have been used as circulator shutoff valves in operating gas-cooled reactors. Similar technology is used in a wide variety of applications that may be more challenging, such as incinerators, fossil power plants, and petrochemical plants.

Circulator shutoff valves are typically designed by the circulator manufacturer by incorporating the shutoff valve as part of the circulator inlet or outlet. All proposed testing is the manufacturer's testing. No special facilities are needed.

6.2.2.3 Technology Development Needs

Butterfly valve technology is relatively mature, having operated in previous gas-cooled nuclear power plants. However, the design for the NGNP has neither been selected nor demonstrated as an integrated system at representative HTS conditions. Integrated testing with the circulator is required to ensure proper behavior of the system and passive operation of the valve. AREVA is confident that commercially available technology is available and ready for integration into the NGNP without further testing as part of either the circulator or heat transport loop prior to qualification testing at the NGNP.

The TDRM tasks required for technology maturation, which are standard manufacturing tests, are captured in Figure K-6.

6.2.3 Hot Duct

A description of the Main Heat Transport System Hot Duct, including technical maturity and development needs, is provided in the following subsections. Test plans for the Reactor Core design features are in Appendix G and the TDRM sheet is in Appendix K.

6.2.3.1 Description

Hot Ducts transport helium coolant between the reactor and the Steam Generator. The Hot Duct (HD) is considered bounding for all other hot gas ducts in the reactor system. The HD is located internal and coaxial to the Cross Vessel between the Reactor Pressure Vessel and the Steam Generator Vessel. The HD is a multi-layered insulated assembly that allows for the separation of hot and cold primary coolant within a single vessel. Hot helium coolant (750℃) from the core travels inside the Hot Duct while cold helium coolant (325℃) returns to the core in the annulus between the outside of the HD and the inner wall of the Cross Vessel. The Hot Duct concept is illustrated in Figure 6-7.

The HD structure consists of the following:

- Liner (Alloy 800H or C/C ceramic composite)
- Wrapped ceramic fiber insulation (Alumina)
- Intermediate foil layer
- Support tube (Alloy 800H)
- Spacers (Alloy 800 or C/C ceramic composite)

Liner – The liner is in direct contact with the hot helium coolant (750℃) and provides support for the insulation on the hot side of the assembly. The temperature could be as high as 900℃ considering hot streaks and may reach 1000℃ during off-normal events such as pressurized conduction cooldown events. Thermal hydraulic and structural analyses are required to determine if Alloy 800H can be used or if a ceramic liner is required.

Wrapped fiber insulation – This material can only be made out of suitable fibrous material to ensure maximum flexibility while ruling out gaps in the insulation space. The use of this material is to prevent unacceptably high temperatures at the support tube. It is for this reason that wrapped insulation is used, as it minimizes the creation of cavities during the service life. The insulation should have a packing density of greater than 100 kg/m^3, as anything below this value would allow significant temperature peaks in the support pipe because of the enhanced free convection of helium within the insulation space.

Intermediate foil layer – An intermediate layer of foil is to be located between the wrapped fiber insulation and the support pipe. This design is needed to provide a high flow resistance to the convective circulation of helium within the insulation space. Without an intermediate foil, the effective thermal conductance of the insulation space would be approximately 30% higher.

Support tube – The above-mentioned internals are housed in a gas-tight support tube, which is to be a closed metal cylinder. This cylinder could be forged or it could be made from a welded rolled sheet. It needs to be made from a high temperature material, such as Alloy 800H, that can withstand a nominal design temperature of 600℃.

Spacers – The spacers are used to join HD sections together. The spacers need to be either 800H or ceramic composites depending on the results of thermal hydraulic and structural analyses.

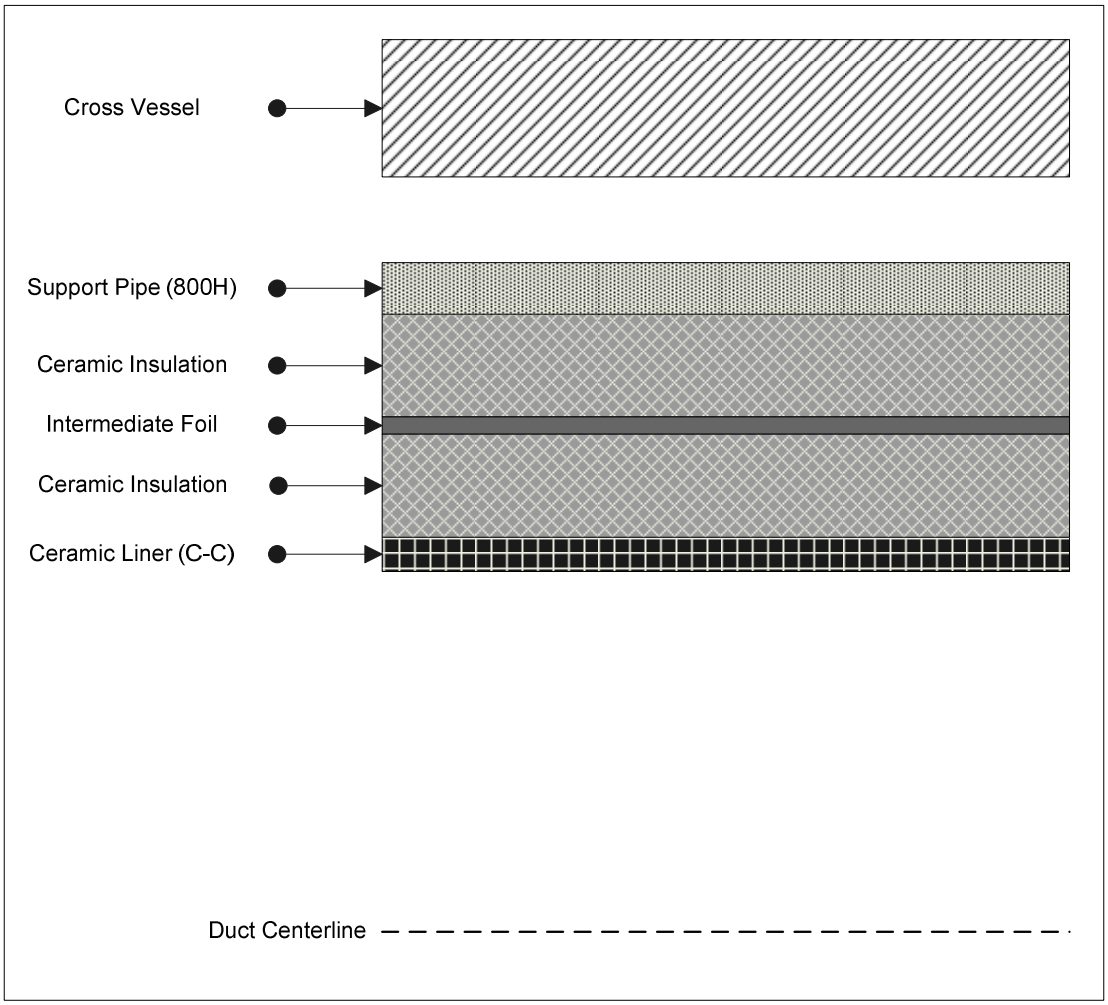

Figure 6-7: Hot Duct Layout

The critical design parameters for the Hot Duct are listed in Table 6-4.

Table 6-4: Hot Duct Critical Design Parameters

Parameter	Design Value
Primary Side T_{hot}	750°C
Primary Side T_{cold}	325°C
Primary Loop Pressure	6.0 MPa
Helium Flow Rate	141 kg/s

6.2.3.2 Technical Maturity

The Hot Duct has been demonstrated previously in Germany at the KVK test loop in the context of the PNP-500 program. A Hot Duct with a ceramic composite (C/C) liner was tested for greater than 5000 hours at temperatures up to 950℃. Metallic and graphite liners have also been tested [2].

The Hot Duct to be used in the NGNP is nearly identical to the tested unit, but it will be larger in diameter and thickness to accommodate the increased coolant flow rate and design pressure, which may have an impact on the design details and how the Hot Duct is assembled.

6.2.3.3 Technology Development Needs

In order to be ready to fabricate a production Hot Duct unit for the NGNP, the following actions are required:

- **Develop and qualify manufacturing processes** – Processes must be developed or qualified to build the components of the Hot Ducts and to assemble the unit. These processes include manufacturing the ceramic liner and metallic support tube and assembling the duct.
- **Analytical performance assessment** – Analytical calculations are necessary to assess the thermal hydraulic and structural performance of the Hot Duct. Some of the items to be assessed are the heat transfer capability through the duct wall, temperature profiles within the Hot Duct during transients, structural performance during a depressurization, and overall lifetime predictions.
- **Engineering scale demonstration** – This test is necessary to validate the analytical performance assessments and to demonstrate the integrated design in a representative environment and conditions.

The TDRM tasks required for technology maturation are captured in Figure K-7.

6.2.4 Steam Generator

A description of the Steam Generator (SG), including technical maturity and development needs, is provided in the following subsections. Test plans for the SG are in Appendix H and the TDRM sheet is in Appendix K.

6.2.4.1 Description

A description of the SG meeting requirements for the AREVA recommended plant, with a 750ºC reactor outlet temperature to the Steam Generator and a two loop PCS system concept, is presented in Figure 6-8 and Table 6-5. This design requires demonstration testing due to a larger diameter and greater thickness compared to what has been designed and manufactured in the past. This conclusion is based on past gas-cooled reactor experience for a design with a thermal capacity of around 200 MW_{th} and inlet temperature up to 750°C.

The reheater and superheater tubes are the most critical part of the SG. For a gas inlet temperature in the range of 750-850°C, the tube temperature can be kept the same by adjusting the exchange tube pitch. The material envisioned for the tubes of the reheater and superheater is Alloy 800H. It is expected that a design life of 60 years could be achieved under NGNP conditions.

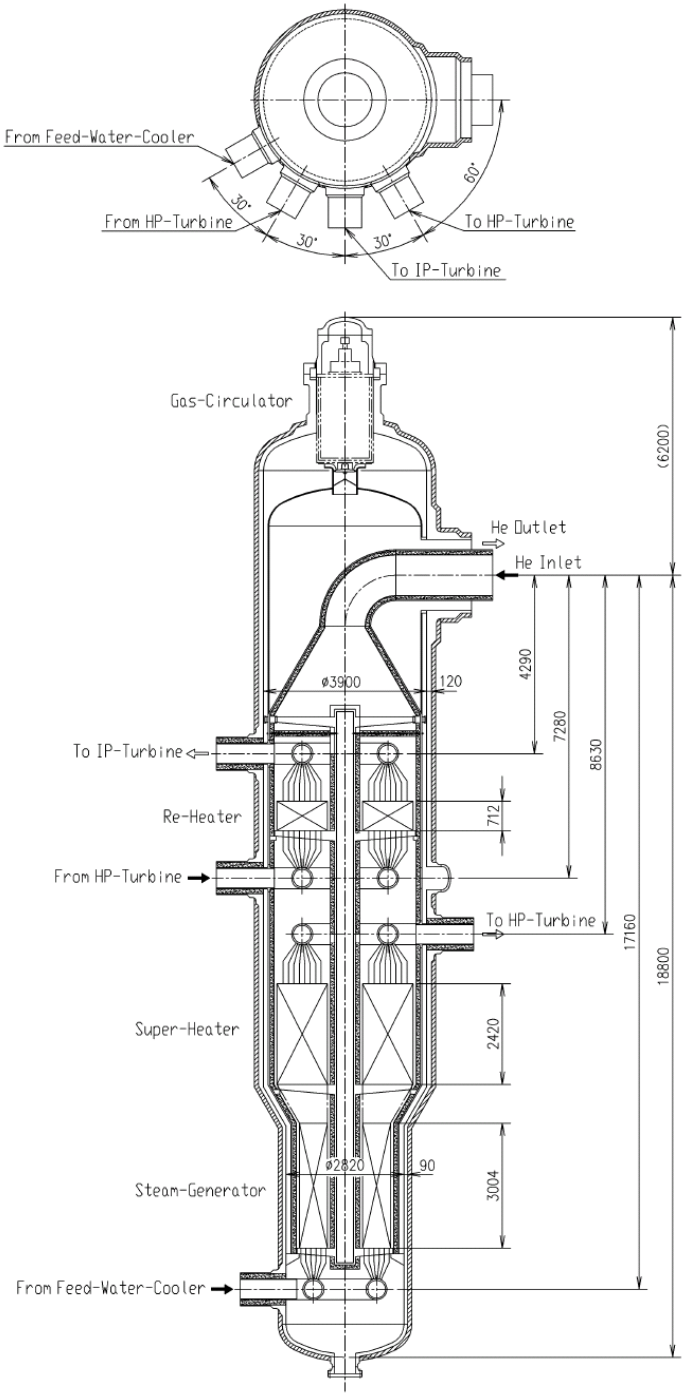

Figure 6-8: Proposed Steam Generator Design

Table 6-5: Proposed Steam Generator Design Overview

Item			Unit	Specification	
General condition					
	Equipment name			Steam Generator	
	Type			Helical coil type	
	Number		(-)	1	
	Heat Transfer duty		MW	306.0	
Design condition				Shell side	Tube side
	Fluid			Helium gas	Water/Steam
	Flow Rate		kg/s	140.3	118.4/100.7
	Inlet Pressure		MPa	5.5	17.2
	Pressure drop		MPa	< 0.06	< 0.76
	Inlet Temperature		℃	825.0	281.5
	Outlet Temperature		℃	405.0	566/538
Dimension					
	Outer Shell (Cir.+RH+SH+SG)	Inside Dia.	mm	4,140	
		Thickness	mm	120	
		Height	mm	Approx. 25,000	
	Heat transportation	Outer Dia.	mm	3,400/2,320	
		Inner Dia.	mm	700	
		Height(sub cooling and evaporator zone)	mm	3,004	
		zone)	mm	2,420	
		Height(re-heating zone)	mm	712	
Material					
	Outer shell		-	2 1/4 Cr -1 Mo Steel	
	Heat transfer tube	(Sub cooling and Evaporator zone)	-	2 1/4 Cr -1 Mo Steel	
		(Super heating zone)		Alloy 800H	
		(Re-heating zone)		Alloy 800H	
	Insulator		-	Ceramics Fiber	
Weight			ton	420	

6.2.4.2 Technical Maturity

The Steam Generator design requires demonstration testing due to uncertainty over the design and manufacturing methods used to build the 200 MW_{th} Steam Generator upon which this design is based. Mitsubishi Heavy Industries (MHI) has identified several development actions to be completed before this design is ready to be installed in the NGNP.

6.2.4.3 Technology Development Needs

In order to be ready to fabricate a production Steam Generator unit for NGNP, the following actions are required:

- **Expand creep and fatigue data for Alloy 800H** – These data are needed to extend the design life of the Steam Generator to 60 years.
- **Qualify bimetallic welds** – Bimetallic welds from 2.25Cr1Mo to Alloy 800H will be necessary. Although MHI has extensive experience with making these welds, they will have to be qualified for application in NGNP.

- **Component manufacturability development** – Several options exist for fabricating the circular hot header. These options must be explored with both the forging supplier and alternative methods such as plate bending and pipe fittings.

- **Engineering scale demonstration** – This test would reduce performance uncertainties. It is recommended this uncertainty be evaluated based on project risk and technology demonstration goals. A 30 MW_{th} mockup of the NGNP Steam Generator is proposed to confirm thermal hydraulic performance, FIV performance, stability of the steam/water interface, and validation of the ISI equipment for the tubes.

The TDRM tasks required for technology maturation are captured in Figure K-8.

6.3 Other Reactor Support Systems

This group of systems and components was referred to as Balance of Plant (BOP) in the previous version of this report, which was based on the NGNP with a steam cycle connected to the reactor through an intermediate gas loop.

6.3.1 Primary Loop Instrumentation

A description of the Primary Loop Instrumentation, including technical maturity and development needs, is provided in the following subsections. Test plans for the Primary Loop Instrumentation are in Appendix I and the TDRM sheet is in Appendix K. This item will cover instrumentation in the primary, secondary, and process heat loop system since the Primary Loop Instrumentation environment will be the bounding case.

6.3.1.1 Description

There are three types of Primary Loop Instrumentation measurements:

1) Reactor Protection System – Post accident shutdown

2) Plant Investment Protection System – Monitoring and control during normal operations

3) NGNP – Test measurements not needed for other functions

The NGNP Plant Protection and Control System includes safety (reactor trip) and non-safety (normal operations) functions. There are redundant sensors and connections between the sensors and the Plant Protection System. The Reactor Protection System (the emergency shutdown system, which is located in a separate control room) uses two-out-of-three logic to analyze sensor inputs.

The Primary Loop Instrumentation included in this test plan is the critical PASSC required for the Plant Protection and Control System measurements. The Primary Loop Instrumentation is used in conjunction with Nuclear Instrumentation to control the neutron flux, operating pressure, and temperature in the Reactor Core.

The NGNP PCDR [3] identifies the following sensor inputs as part of the Plant Protection and Control Systems: flow rate measurements, reactor cold leg temperature sensors, reactor hot

leg temperature sensors, pressure sensors, and moisture sensors. The signals from these instruments provide inputs to the Plant Protection System, Plant Control System, and the Plant Monitoring System. The flow rate, pressure, humidity, and temperature signals are part of the safety system and part of the reactor trip control logic. The moisture level is also monitored by the operator and used to manually control the Helium Service System, which removes moisture and other impurities to prevent material corrosion in the reactor and primary loop.

The NGNP conceptual design activities will determine accident scenarios, the required measurements, the sensor environment, and the sensor requirements for each instrument. Some preliminary values are shown in Table 6-6.

Table 6-6: Sensor Operating Parameters

Sensor	Accuracy/Precision Range	Operating Range	Survival Range
Temp Hot Leg	2-3%	< 750ºC < 6 MPa	< 900ºC < 7 MPa
Temp Cold Leg	2-3%	< 350ºC 6 MPa	< 500ºC 7 MPa
Pressure	2%	100ºC – 300ºC 7 MPa	200ºC – 300ºC 7 MPa
Flow Rate	1 RPM circ speed	n/a	n/a
Moisture (Reactor Protection System)	10%	100-1000 vpm 200ºC 7 MPa	200ºC 7 MPa
ΔP	5%	0.0 – 0.1 MPa 100ºC – 300ºC 7 MPa	200ºC – 300ºC 7 MPa
Moisture (monitored)	10%	2 – 100 vpm 100ºC – 300ºC 7 MPa	200ºC – 300ºC 7 MPa

Though the NGNP design and associated safety analyses have not progressed to the point that detailed functional requirements for these instruments can be developed, the column entitled “Accuracy/Precision Range” is included in Table 6-6 to provide a preliminary indication of the expected performance requirements for each particular instrument.

The flow rate through the reactor is monitored during normal operations and is used to initiate a reactor trip. The flow rate through the circulator can be calculated using the circulator speed and performance curve.

The cold leg temperatures are important core performance parameters and are used with the Nuclear Instrumentation (neutron flux) to monitor core power and adjust the position of the control rods. The reactor inlet (cold leg) temperature and control rod position have the biggest effect on core reactivity. Platinum and rhodium thermocouples meet this function up to 1300℃.

The reactor hot leg (outlet) temperature and Nuclear Instrumentation monitor the core power. Commercially available temperature sensors are available for temperatures up to 1700℃.

The pressure monitors performance and is an input to the Helium Service System, which supplies purified helium at pressure to the primary loop. Pressure transducers meet the operating range.

Optical measurement of dew point is under consideration. The sensor location must be in the primary loop. The Helium Service System humidity is not considered useful as an I&C signal for keeping the humidity level in the range required to prevent the corrosion of materials in the reactor and the primary loop due to time lag and mixing. If it is located in another auxiliary loop there is concern the sensor might be isolated in off-normal conditions, in which case the plant loses moisture monitoring capability.

6.3.1.2 Technical Maturity

It is not clear what the requirements for redundancy and diversity will be in the US regulations for the HTGR. Typically, diversity can be achieved by using two different measurement phenomena or two different manufacturers of a single type of sensor. The diversity requirements are important because if they lead to the need for different measurement phenomena, then this may lead to the need for additional technology development for some sensors.

In-core Temperature Measurement – Although it is desirable to know the in-core temperature, in practice the high temperatures in the core preclude using direct temperature as a safety measurement. Current technology for measuring temperatures is limited to 1700℃. Higher temperature methods are only reliable for short periods of time, not for continuous operation. Instead, measurements are planned in protected areas, such as isolated penetrations, which can be calibrated against in-core temperatures measured using a thermo-well (which isolates the thermocouple) and used to calculate the core temperature during normal operation. For testing purposes, some thermocouples should be placed in the hottest areas and calibrated against some protected thermocouples for calculating the temperatures. The thermocouples in the hot area are not expected to survive and are not needed for plant operation or protection.

Flow Rate Measurement – The most reliable technology is an indirect method using the circulator shaft speed to calculate the flow rate using the circulator performance curves (adjusting for pressure and temperature). Alternative measurements may be possible using a venturi meter or the Control Rod Drive pressure drop.

Reactor Cold Leg Temperature Sensor – Commercially available thermocouples are available that can survive expected off-normal conditions (<500℃). Conventional Type K thermocouples are rated at 1300℃.

Reactor Hot Leg Temperature Sensors – Temperature sensors that are reliable up to 1700℃ are commercially available. These sensor sy stems will be calibrated to NIST or other appropriate standards. To assure adequate coverage of the hot leg, including the impacts of flow stratification, these sensors will be used in conjunction with detailed CFD analyses to monitor the temperature distribution within the hot legs.

Pressure Sensors – These should be at locations of greatest pressure in the primary loop and not in a specific location off the loop, such as the connection to the Helium Service System.

Moisture Sensors – AREVA experience is that current humidity instrumentation does not go to low enough parts per million levels at high temperatures. The best option may be an optical measurement to determine the dew point in the primary loop. The Helium Service System humidity is not useful (time lag and mixing makes the usefulness of the value questionable) as an I&C signal for keeping the humidity level in the range required to prevent materials corrosion in the reactor and primary loop. If it is located in another auxiliary loop, there is concern the sensor might be isolated during off-normal conditions, in which case the plant loses moisture monitoring capability.

6.3.1.3 Technology Development Needs

A limited amount of design work has been devoted to the Primary Loop Instrumentation Systems. The identification of no feasibility issues for these systems does not preclude the identification of new sensor research and development needs to meet NGNP safety and reliability goals as the design and licensing processes progress. Demonstration and qualification testing is required in helium at expected normal and off-normal pressures and temperatures.

The tasks required for technology maturation are captured in Figure K-9.

6.3.2 Fuel Handling System

A description of the Fuel Handling System (FHS), including technical maturity and development needs, is provided in the following subsections. Test plans for the FHS are available in Appendix J and the TDRM sheet is in Appendix K.

6.3.2.1 Description

The FHS consists of a series of mechanisms and devices capable of transferring fuel and reflector blocks between the Reactor Core and the Near Reactor Spent Fuel Storage location. The system is similar to the design for FSV and GT-MHR with the exception of a Fuel Storage Server (FSS) instead of Fuel Transfer Casks. The FSS reduces the estimated refueling time.

Refueling is accomplished by using robotic machines to remove core blocks and transfer them to the adjacent Local Spent Fuel Storage (LSFS) cell, which is part of the Spent Fuel Storage System (SFSS). Subsequently, new and irradiated fuel blocks are delivered to the FHS, which then places them into the Reactor Pressure Vessel (RPV). Access to the core region is provided by a Fuel Elevator mounted at the central position. All fuel elements and reflector blocks go through this central position. A Fuel Handling Machine (FHM) for the in-vessel fuel handling is installed at the position of an inner control rod. From there the Fuel Handling Machine can unload and load a one-sixth sector of the core.

The components of the FHS are mobile and may be shared among all reactor modules in multi-module plants. The FHS also interacts closely with the control rod removal cask. This cask, part of the Reactor Service System, mates with the Fueling Adaptor, and is used to remove and install central column instrumentation as well as inner and outer control rod and

reserve shutdown assemblies. These in-core components are strong sources of gamma radiation and are stored in wells in the Reactor Building during refueling. The Spent Fuel Storage System also interfaces closely with facilities for storage of graphite elements and waste treatment systems.

The FHS consists of the following devices and facilities:

6.3.2.1.1 Fueling Adaptor

The Fueling Adaptor (FA) is a mechanical device that extends the control rod drive mechanism (CRDM) nozzles. The FA is a welded steel structure that fits over the CRDM nozzles and creates a soft seal around each nozzle to permit the removal of CRDMs and the insertion of the Fuel Elevator (FE) and Fuel Handling Machine (FHM) without opening the reactor coolant boundary to the Reactor Auxiliary Building (RAB) maintenance hall. The weight of the FA is carried on the FHS support skirt, which is supported by the RPV.

The FA is designed with soft or inflatable seals that operate on the outside surface of the CRDM nozzle. On the inner CRDM nozzles and the central column nozzle, the FA will also have horizontal valves. Valves have been located at three separate levels so the gate enclosures and operators do not interfere with each other.

6.3.2.1.2 Fuel Elevator

The Fuel Elevator (FE) is a machine that can be inserted through the Fueling Adaptor into the RPV. The central penetration on the reactor head, which normally contains in-core instruments, is used for the FE. The FE supports blocks from the bottom of the blocks and has a vertical range of motion. It can also rotate so the elevator car can face the FHM at any sector. The FE can be rotated to align the face of the car with the Fuel Storage Server when the FE is in the raised position. Because fuel in the Fuel Elevator is always inside the RPV or the Fuel Storage Server, the FE does not require any shielding or specific ventilation capability. A soft seal between the Fuel Elevator and the RPV is sufficient to maintain the reactor coolant boundary during refueling. Figure 6-9 depicts the Fueling Adaptor and the Fuel Elevator as assembled for refueling.

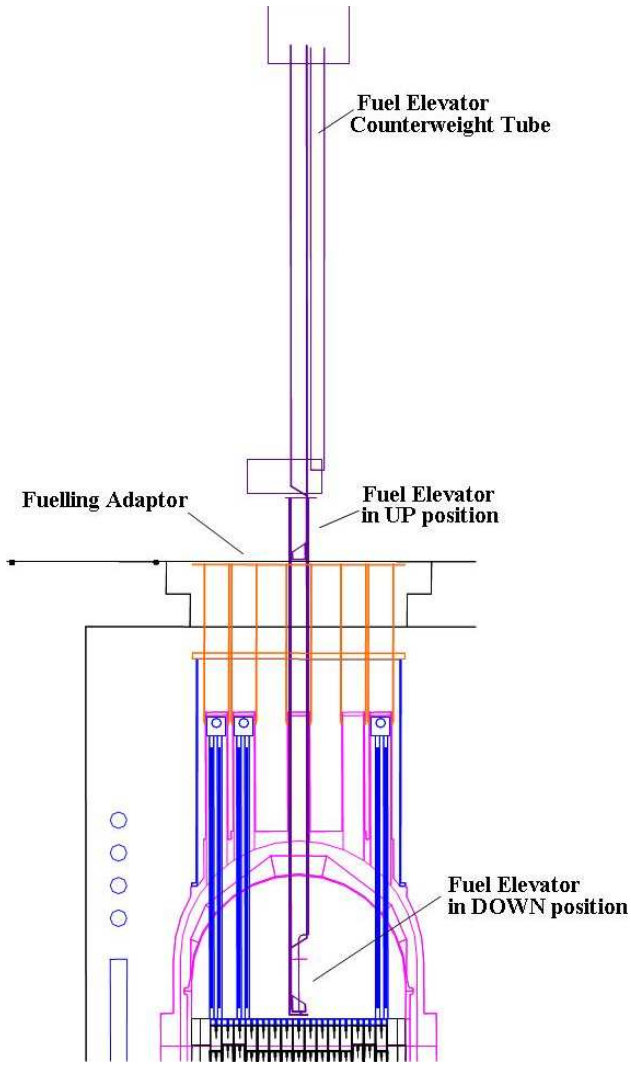

Figure 6-9: Fueling Adaptor and Fuel Elevator

6.3.2.1.3 Fuel Handling Machine (FHM)

The Fuel Handling Machine (FHM), depicted in Figure 6-10, is a robotic manipulator that can be inserted into an inner Control Rod Drive penetration. It is equipped with a grapple probe that can be inserted into the handling hole in the top of any hexagonal block. The grapple probe engages the hexagonal block handling hole to lift via the FHM. The FHM is equipped with a pantograph-like mechanism giving it the capability to extend the grapple to a radius sufficient to reach all the blocks within a sector, including all the hexagonal reflector blocks. The FHM rotates, extends, raises, and lowers to access all the hexagonal blocks in a sector from an inner CRDM nozzle.

Blocks are grappled and raised one at a time by the FHM. When the FHM is in its uppermost operating position and oriented toward the center of the core, it can extend and place the block on the Fuel Elevator. When placing blocks in the core, the process is reversed, with the FHM grappling a block from the Fuel Elevator, locating the block over the proper column, and lowering it into place. The rotational position of the block is maintained to correctly align the CRDM holes with the dowels. To accomplish proper alignment, the FHM has the ability to

rotate the block on the grapple axis and to move the grapple probe over small horizontal distances.

The FHM can move in the Z, R, theta (around the inner CRDM nozzle axis) and phi (around the grapple head axis) directions and in fine motion at the grapple head. The FHM concept is expected to include a rigid, non-rotating tubular mast. Inside this mast, a rotating tubular mast can be lowered from a "ready" position above the top of the core to the elevation necessary to grapple the lowermost element. Raising or lowering the inner mast accomplishes changes in the Z-direction and rotation of the inner mast accomplishes changes in the theta-direction.

The complete FHM, when closed at R=0, must fit through the CRDM nozzle. Relative vertical motion of bearings supporting the grapple arms will change the angle of the supporting arms, and change R. Phi and grapple head X and Y motions are accomplished by electromechanical drivers located on the grapple head, as is the expansion and contraction of the grapple probe.

Figure 6-10 depicts the in-vessel details of the Fuel Handling Machine.

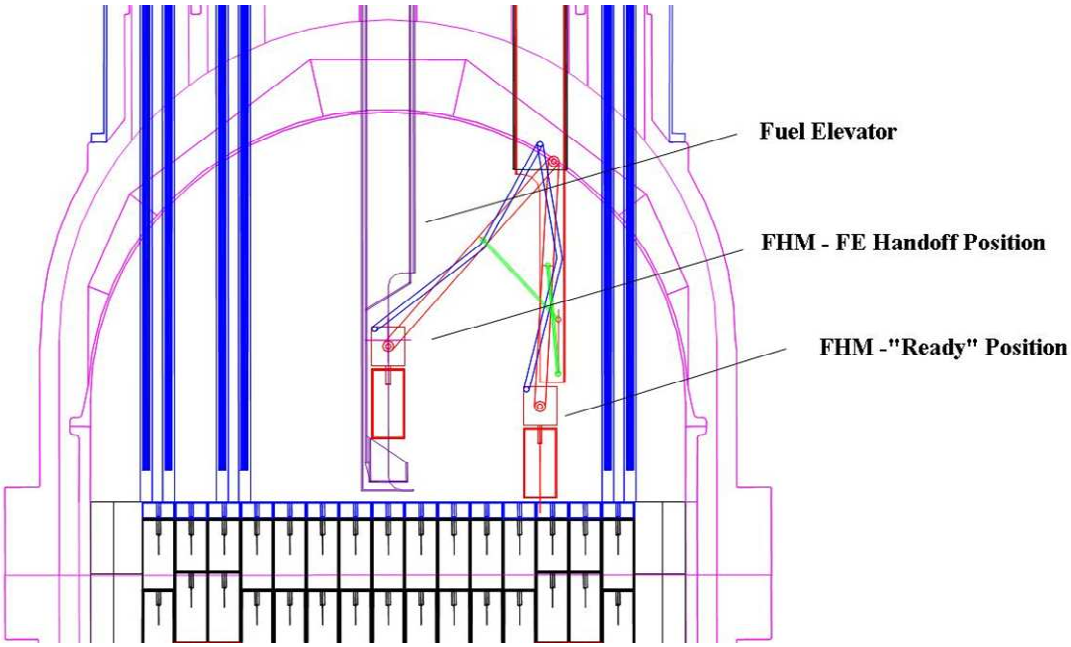

Figure 6-10: Fuel Handling Machine

6.3.2.1.4 Fuel Storage Server (FSS)

The Fuel Storage Server (FSS) is a proprietary AREVA fuel element handling device designed to replace the cask-based handling systems envisioned for most past prismatic HTGR systems. Fuel elements are transferred between the FE and the module Spent Fuel Storage area using the FSS. The FSS was developed to decrease refueling times and to reduce worker exposure during refueling operations.

6.3.2.2 Technical Maturity

Based on the successful operation of this type of system at Fort Saint Vrain, the technology maturity level is considered high. The areas recommended for testing are the soft seals,

bearings and lubricants that operate in a helium environment, and long term operation of the integrated system. Long term tests are required to estimate system reliability.

6.3.2.3 Technology Development Needs

The main technology development actions for the seals, bearings, and lubricants involve the following:

- Establishing reliable lifetime limitations due to moderately high temperature operation in a helium environment
- Determining the impact of soft seal performance on plant safety case
- Minimizing primary system contamination

Qualification of these subcomponents will require an assessment of material performance and contamination release in a moderately high temperature helium environment. The estimated temperature requirements for most components are expected to be limited to 100℃. Temperature requirements for the Fuel Handling Machine grapple and mast components will require a core decay heat evaluation to accurately determine operational temperatures.

Prior to installation of the major system components into the NGNP reactor, a series of functional tests will be required to verify acceptable operation. One key test will be an endurance test, in which the component is continuously operated under realistic conditions of temperature, atmosphere, and load for a duration consistent with expected refueling times.

The tasks required for technology maturation are captured in Figure K-10.

7.0 REFERENCES

[1] 51-9072396-001, NGNP Conceptual Design Studies Baseline Document for Indirect Steam Cycle Configuration

[2] 12-9045707-001, NGNP Primary and Secondary Cycle Concept Study

[3] 12-9051191-001, NGNP with Hydrogen Production Preconceptual Design Studies Report

[4] 51-9103803-002, NGNP Conceptual Design Baseline Document for Conventional Steam Cycle for Process Heat and Cogeneration

[5] 12-9102279-001, NGNP Conceptual Design DDN/PIRT Reconciliation

[6] 51-9106032-000, NGNP Plant Design Requirements Document

[7] 51-9105936-000, NGNP Nuclear Heat Source System Boundaries and Interfaces

[8] 12-9075581-000, NGNP Risk Evaluation of Major Components

[9] TDR-3001463-000, NGNP Technology Readiness Levels for 750℃ Conventional Steam Cycle Configuration

APPENDIX A: REACTOR INTERNALS TEST PLANS

A.1 Reactor Internals Test Plan (TRL 4 to 5)

NGNP Nuclear Heat Supply System

Test Plan for Reactor Internals TRL 4 to 5

Introduction

This test plan describes the actions necessary to move the Technology Readiness Level (TRL) of the Reactor Internals system from 4 to 5. These actions include qualification of a new source of nuclear graphite material, initial development and testing of composite materials. The Reactor Internals are illustrated in Fig. A-1.

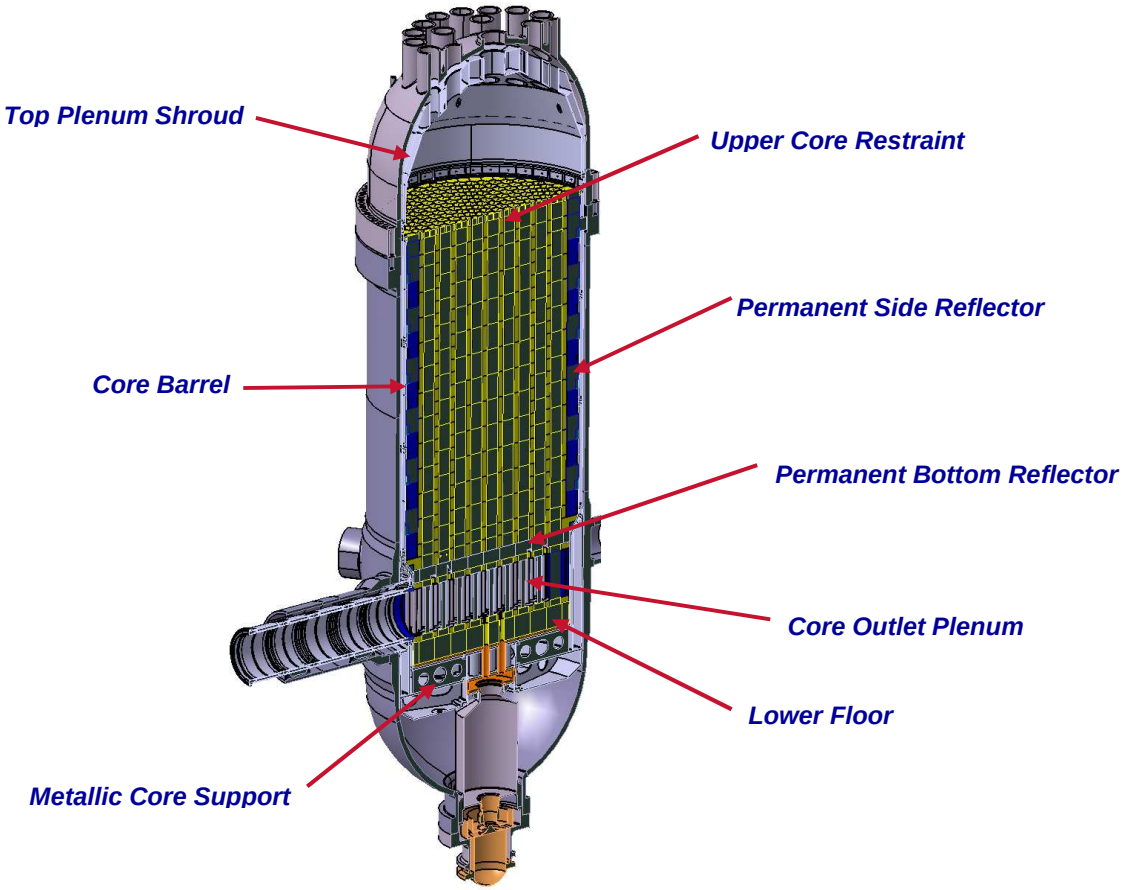

Fig. A-1: Reactor Internals

Technology Description and Readiness Level

Plant:	NGNP
Area:	Nuclear Heat Supply System
System:	Reactor System
Subsystem/Structure:	N/A
Component:	Reactor Internals

Technology Readiness Level

Current TRL:	4
Next TRL:	5

The design of Reactor Internals components is a well-understood activity and includes consideration of various mechanical, thermal, and materials phenomena. The TRL of this structure, if assessed based on the use of well-characterized materials of construction, would be at least a TRL of 7. The NGNP reactor, however, requires the use of materials that are not well-characterized. In the case of the graphite components, a new source of nuclear grade graphite must be developed. Specifically designed composite materials must be developed and qualified for components which require such materials. Based on these material development needs, the system TRL is set at a TRL of 4.

Required Tests to Achieve Next TRL

Two test series are required to achieve the next TRL level for the Reactor Internals System. These are:

Test 1: Qualification of Nuclear Grade Graphite

Test 2: Development and Initial Testing of Composite Materials

Test 1: Qualification of Nuclear Grade Graphite

The activities necessary for qualification of appropriate sources of nuclear grade graphite for use in the NGNP are currently addressed in an ongoing program being conducted by INL as part of the overall NGNP program. As such, specific test details and requirements are not included in this test plan.

One item, in particular, deserves some mention here. AREVA has identified two types of graphite that are its preferred grades based on work done in France. These grades are NBG-17 and PCEA, for fuel blocks and reflectors, respectively. Based on the current understanding of the INL graphite program, PCEA appears to be fully included in the qualification activities. In contrast, NBG-17 appears to have been included to a much lesser extent. AREVA recommends the full inclusion of NBG-17 in the INL graphite qualification program.

Test 2: Development and Initial Testing of Composite Materials

Test Objective

The objective of this test series is to develop and initially test a composite material for use in several Reactor Internals subcomponents. The material properties for each composite component will be a strong function of the geometry of the final design of the component. This series of tests and development activities is only conducted to provide a reasonable expectation that the selected material and fiber architecture will eventually be able to successfully meet the material properties requirements when tested as a final component.

Test Description

Test Conditions

Much of the initial testing can be accomplished in air over the expected range of component operating temperatures. Limited testing in a helium environment will be required to assess the potential impacts on performance. Irradiation tests of representative material coupons will be required to identify potential deleterious effects.

Test Configuration

The tests conducted and the associated incorporation of existing composite data will fulfill three main objectives:

- Verify acceptable fabrication characteristics for the chosen configuration, including assessing adequate fiber/matrix bonding.
- Identify potential deleterious environmental effects, including the effects of temperature, helium environment, and radiation field.
- Provide initial mechanical and thermal properties data for use in the components design activities.

The specific parameters that require measurement will be determined subsequent to development of design requirements for the individual core structures to support normal operation and accident conditions.

Test Duration

The duration of these tests will be sufficient to provide the information required above. It is estimated that this test series will take approximately one year to complete, if the number of composite materials and configurations are limited and are tested in parallel. The applicable risks involve deciding when sufficient data has been gathered to reasonably expect that the selected composite material will successfully support the design of the appropriate components. A preliminary test schedule is presented in Fig. A-2.

Proposed Test Location

It is expected that sufficient materials testing laboratories will be able to perform the required test. The limiting constraint is expected to be the need for testing of irradiated samples for certain required parameters. Such testing may be conducted at the INL or another approved laboratory.

Measured Parameters

The parameters measured during individual tests will be those required to meet the objectives identified under the “Test Configuration” section.

Data Requirements

Since this data will not be used to formally qualify or codify the composite material, it does not have to meet formal quality standards. The data quality needs to be able to reasonably support the decision as to which composite materials and configurations are selected for each component. The economic risk of proceeding with an inadequate material is minimized.

Test Evaluation Criteria

The results of this test series will be evaluated based on the perceived ability of the resulting composites to meet the design requirements for the final components.

Deliverables

The deliverables for this test series are a set of initial mechanical, material, and thermal properties at operating and accident conditions adequate to support the initial design of the composite components of the Reactor Internals system.

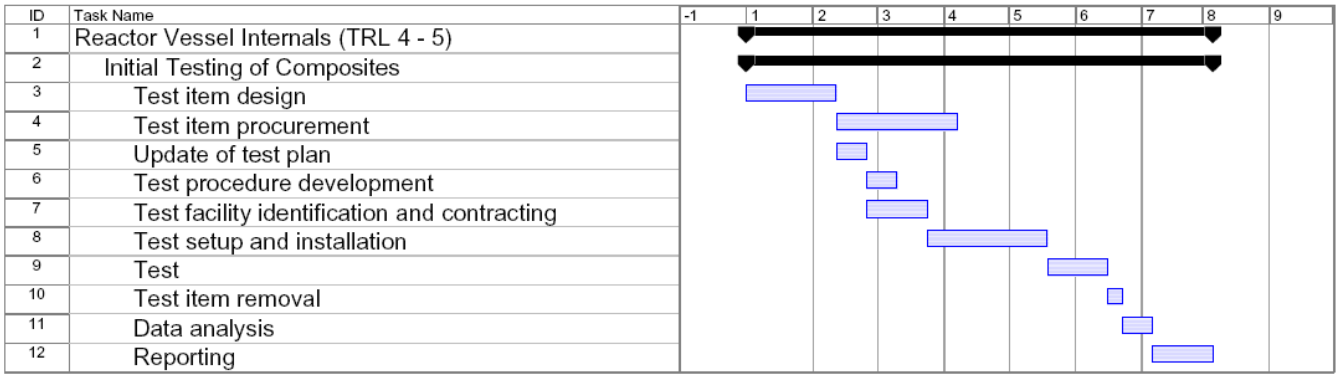

Fig. A-2: Test Schedule for Reactor Internals for TRL from 4 to 5

A.2 Reactor Internals Test Plan (TRL 5 to 6)

NGNP Nuclear Heat Supply System

Test Plan for Reactor Internals TRL 5 to 6

Introduction

This test plan describes the actions necessary to move the Technology Readiness Level (TRL) of the Reactor Internals system from 5 to 6. The only required action required to is complete the final design of the composite components of this system. This action will support later formal materials testing at higher TRL levels. The Reactor Internals are illustrated in Fig. A-3.

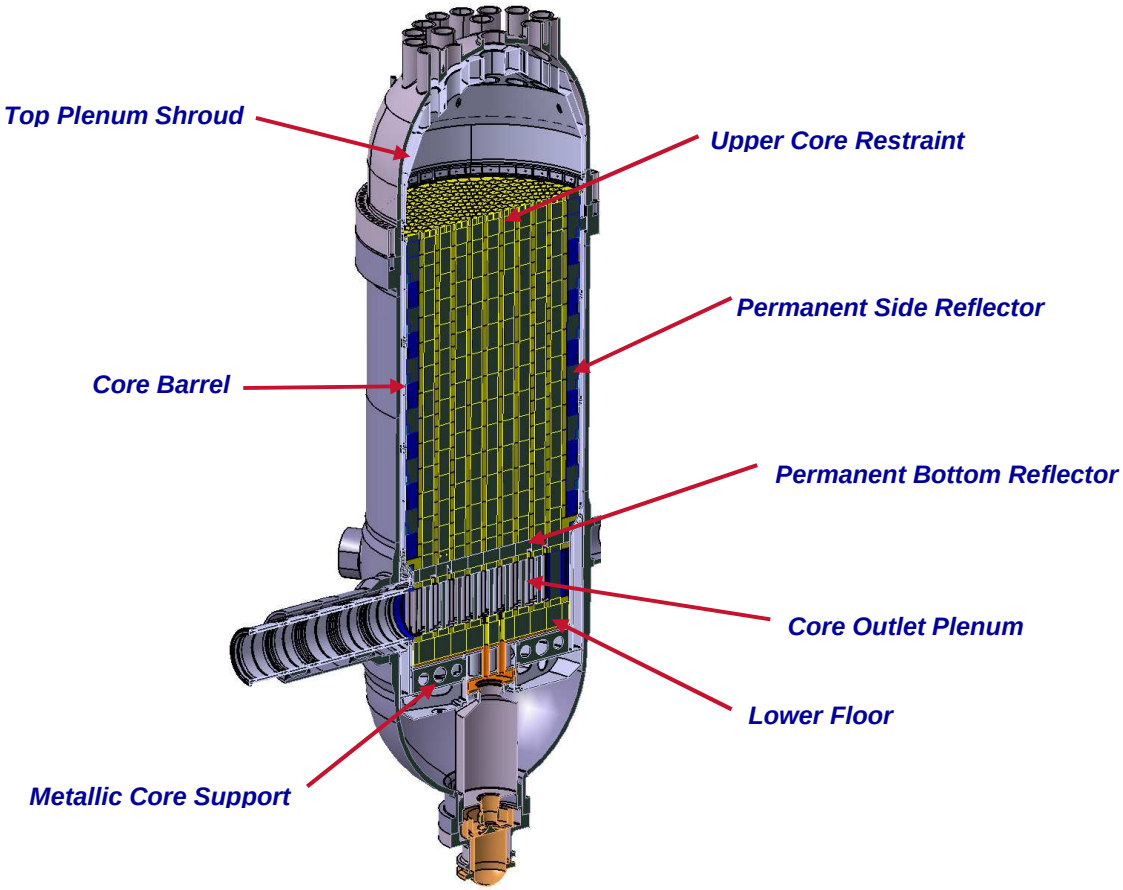

Fig. A-3: Reactor Internals

Technology Description and Readiness Level

Plant:	NGNP
Area:	Nuclear Heat Supply System
System:	Reactor System
Subsystem/Structure:	N/A
Component:	Reactor Internals

Technology Readiness Level

Current TRL:	5
Next TRL:	6

Required Tests to Achieve Next TRL

The actions required to move from TRL 5 to TRL 6 are to produce final, or near-to-final, designs of all Reactor Internals components that are to be composed of composite/ceramic materials. These designs will use the initial material test data produced in development efforts to achieve TRL 5.

Test 1: Design of Composite/Ceramic Components

Test Objective

Because of the importance of fiber architecture to the material properties of a composite component, meaningful materials properties testing can only be performed on the final configurations of those components. In order to support such materials testing at the next TRL level for the Reactor Internals composite components, the design of these components must be effectively completed at this stage. Based on a review of potential uses of composite materials within the NGNP reactor vessel, the components considered here are the Upper Core Restraint Blocks and the Lower Floor Blocks. These designs should use the materials properties data obtained during the TRL4 testing, along with materials data available from the open literature and vendors, as input to this design activity. The adequacy of the design assumptions will be verified at the conclusion of the material qualification testing.

One of the objectives of this design activity is to verify the need for these two components to be comprised of composite materials. It is possible detailed analyses may indicate more conventional materials may suffice, particularly in the case of the Lower Floor Blocks. Should more conventional materials be found acceptable, development activities for that component would continue under plans associated with the new material.

Test Description

This action is a design activity. There are no supporting tests envisioned.

Test Duration

Basic design concepts for the Reactor Internals ceramic components have been developed as part of the pre-conceptual design of the NGNP. Finalizing these designs to where they are adequate to support qualification testing would include identifying expected bounding component loads and operational environments, followed by development of a detailed component model using appropriate design software. Completing this effort should not require more than one year. A preliminary schedule for these actions is presented in Figure A-4.

Measured Parameters

This action is a design activity. There are no supporting tests envisioned.

Data Requirements

This action is a design activity. There are no supporting tests envisioned.

Test Evaluation Criteria

This action is a design activity. There are no supporting tests envisioned.

Deliverables

The deliverables for this action are final, or near-to-final, component designs for each composite component of the Reactor Internals System. The designs must be sufficiently reflective of the final NGNP design such that meaningful materials testing can be conducted without risk of being invalidated by later design updates.

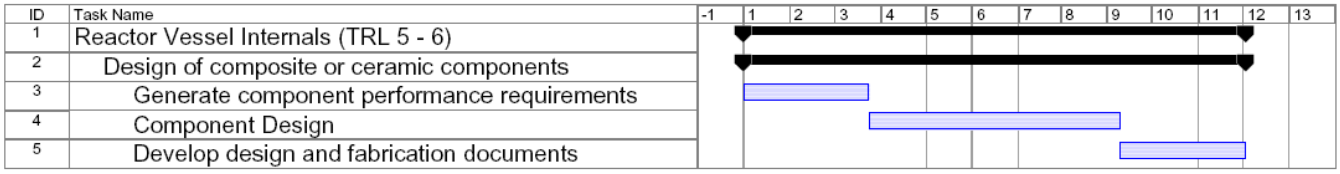

Fig. A-4: Test Schedule for Reactor Internals for TRL from 5 to 6

A.3 Reactor Internals Test Plan (TRL 6 to 7)

NGNP Nuclear Heat Supply System

Test Plan for Reactor Internals TRL 6 to 7

Introduction

This test plan describes actions necessary to move the Technology Readiness Level (TRL) of the Reactor Internals system from 6 to 7. These actions consist of tests required to qualify and codify the composite materials from which several components are fabricated. The Reactor Internals are illustrated in Fig. A-5.

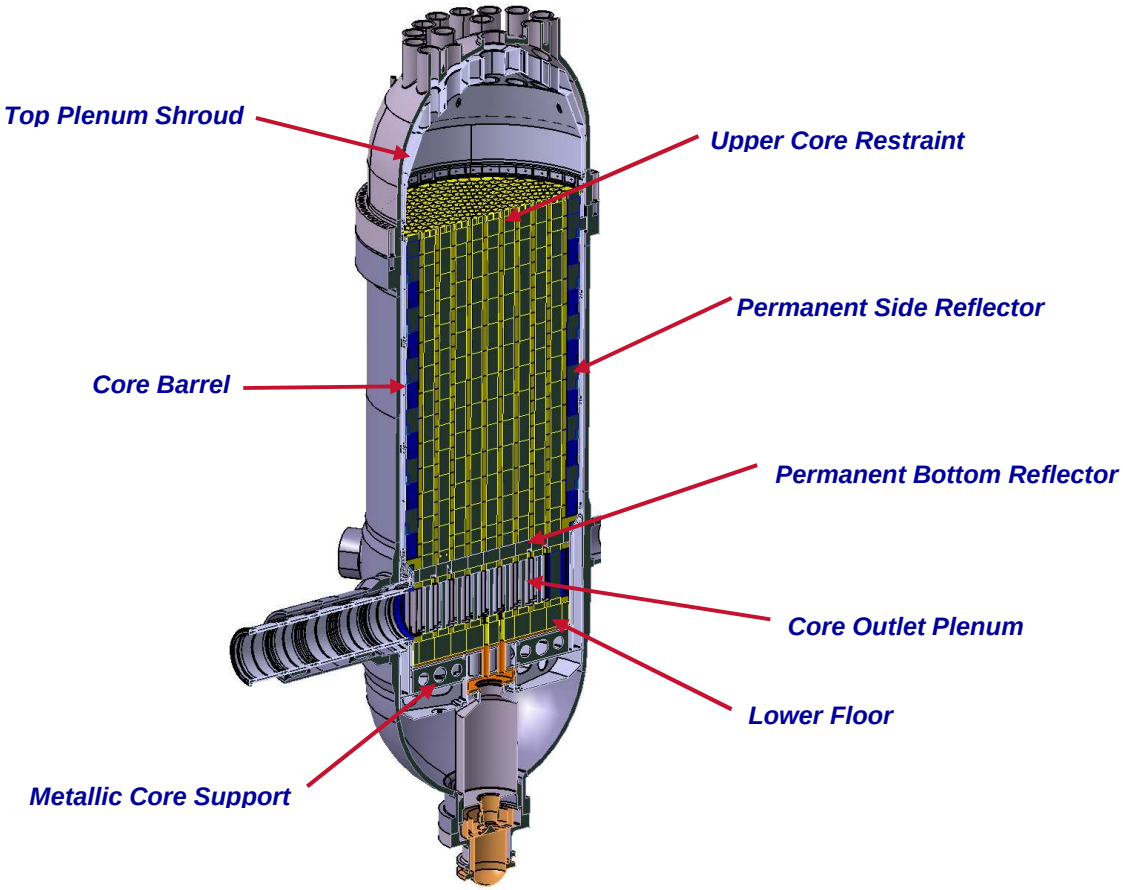

Fig. A-5: Reactor Internals

Technology Description and Readiness Level

Plant:	NGNP
Area:	Nuclear Heat Supply System
System:	Reactor System
Subsystem/Structure:	N/A
Component:	Reactor Internals

Technology Readiness Level

Current TRL:	6
Next TRL:	7

Required Tests to Achieve Next TRL

A series of tests to formally qualify the Reactor Internals components composed of composite materials is required to move to the next TRL level. In addition, testing of key components to obtain data to support the required conduction cooldown analysis is required at this point.

Test 1: Qualification of Composite Materials

Test Objective

The objective of this test series is to provide sufficient mechanical behavior information about the selected composite materials to adequately model their behavior in appropriate design calculations and to support codification of the material.

Test Description

Test Conditions

The conditions under which the materials tests are conducted shall be sufficient to qualify the composite material for use under NGNP conditions up to, and including, the following extremes.

Table A-1: Test Conditions

Upper Core Restraint Blocks	
Maximum Operating Temperature - °C	350
Maximum Accident Temperature - °C	1100
Expected Lifetime – years	60
Expected Lifetime Fluence – n/cm^2	1.6x10^{20}
Environment	Helium and TBD impurities

Lower Floor Blocks	
Maximum Operating Temperature - °C	750
Maximum Accident Temperature - °C	1100
Expected Lifetime – years	60
Expected Lifetime Fluence – n/cm^2	1.7x10^{13}
Environment	Helium and TBD impurities

Test Configuration

The series of tests will be configured using standard materials testing methods to measure the parameters indicated below. The tests will be performed on a combination of material specimens and representative component mockups depending on the parameter of interest. Many structural/mechanical parameters are dependent on the component geometry due to the nature of composite materials.

Parameters will be measured at various points over the range of expected temperatures and neutron fluence.

In addition, long term properties, including creep and long term helium interactions behavior, will also be measured.

Test Duration

The duration of these tests will be sufficient to provide the information required above. It has been estimated in TDR-3000807, “NGNP Composites R&D Technical Issues Study”, that activities associated with qualification and codification of all composite materials for the NGNP will take 4 to 6 years to complete. A schedule of all tests required to move from TRL 6 to TRL 7 is shown in Fig. A-6.

Proposed Test Location

It is expected that many materials testing laboratories will be used to process the large number of samples required for this test series. The limiting constraint is expected to be the need for testing of irradiated samples for certain of the required parameters. It is anticipated that there will be limited numbers of test reactors which can handle the size of the required test specimens. Reactors in France (CEA) and in Russia have been identified as likely candidates for these tests. More may be possible if it is determined to be acceptable to use scaled-down components for these tests.

Measured Parameters

The parameters measured using material specimens should include:

- Coefficient of Thermal Expansion
- Thermal Conductivity and Diffusivity
- Emissivity
- Specific Heat

The parameters measured on representative component mockups should include:

- Stress Rupture & Creep Data
- Fracture Toughness Data
- Stress Strain Curves
- Fatigue Data
- Ultimate Tensile Strength
- Yield Strength (or equivalent for composites)
- Young’s Modulus
- Poisson’s Ratio
- Compressive Strength
- Flexural Strength
- Biaxial / Multi-axial Flexural Strength
- Flexural Modulus

- Strain to Failure
- Shear Strength
- Inter-laminar Shear Strength
- Trans-thickness Tensile Strength
- Shear Modulus

Specific required values will be determined during the design process.

Data Requirements

The accuracy of all measurements taken during the testing will be in compliance with the necessary standards required to support codification. All data shall be collected in a manner consistent and compliant with NQA-1. Test conditions for transient condition analysis will be defined as the NGNP design progresses.

Test Evaluation Criteria

The materials property data developed by this series of tests will be evaluated by validating that the design of the composite components meets their individual design criteria. That is, the composite components design calculations performed to raise the system TRL from 5 to 6 will be revisited using the qualified materials property data and verified to be acceptable.

Deliverables

The deliverables for this test series are a set of composite material property data sufficient to support the design of the Reactor Internals composite materials and the appropriate codification activities.

Test 2: Properties Data Collection to Support Conduction Cooldown Analyses

Test Objective

The objective of this test series is to provide sufficient thermal hydraulic data on the radial heat path from the core region to the Reactor Pressure Vessel to support the completion of required conduction cooldown analyses.

Test Description

Test Conditions

These tests will be conducted in a helium environment at atmospheric pressure conditions. Test temperatures will be varied to provide an assessment of functionality of each variable with temperature over the range from nominal inlet temperature (325℃) to postulated accident maximum temperatures (1100℃). Graphite thermal properties, including the impacts of neutron irradiation on those properties, are not considered in these tests. They will be covered by the ongoing INL graphite development and qualification program.

Test Configuration

The following tests are envisioned to provide the required information:

- Gap loss coefficients – frictional loss coefficients for flow through the gaps between graphite blocks are determined. The proposed test configuration defines a “unit cell” of gaps, i.e., the intersection between three adjacent blocks and neighboring block sides up to half of the block face width. Gap sizes are varied from 0-1.0 cm. Helium flows will be be simulated based on Re number. The flow parameters should be based on expected natural circulation in the core under pressure conduction cooldown conditions.
- Fuel block coolant channel loss coefficients – frictional loss coefficients for flow through a fuel block coolant channel are determined. The proposed test configuration consists of several single fuel flock coolant channels, with diameters varying from TBD to TBD cm. Helium flows are varied from TBD-TBD m/s.
- Fuel and reflector block conduction – A heat conduction test is performed using a representative fuel block and reflector block. One side of each block is heated to over a range of conditions up to 1200℃ with an associated heat flux of TDB W/cm^2. The temperature of the opposite face of the block is recorded as a function of time.
- Core barrel emissivity – The emissivity of a representative section of core barrel material is determined as a function of temperature between 325℃ and 750℃.

In addition to these tests, an integrated thermal hydraulic test of a representative section of the Reactor Internals may be required at some point, but such a test is not currently specified.

Test Duration

The duration of these tests will be sufficient to provide the information required above. It is estimated most tests will be of short duration. A schedule of all tests required to move from TRL 6 to TRL 7 is shown in Fig. A-6.

Proposed Test Location

These are separate effects tests with each one requiring a specific test rig. They could be performed at the CTF or at another test facility.

Measured Parameters

The parameters measured during individual tests will be those required to establish values for the parameters identified under the “Test Configuration” section.

Data Requirements

The accuracy of all measurements taken during the testing will be in compliance with the necessary standards required to support computer code development. All data shall be collected in a manner consistent and compliant with NQA-1. Test conditions for transient condition analysis will be defined as the NGNP design progresses.

Test Evaluation Criteria

The data developed by this series of tests will be incorporated into the computer codes used to predict the conduction cooldown behavior of the NGNP. This incorporation will be via a series of phenomenological models that describe each behavior. These models will be reviewed for reasonableness against existing models to verify data integrity.

Deliverables

The deliverables for this test series are a set of thermal hydraulic performance curves covering the identified parameters and a test report documenting performance of the tests.

ID	Task Name
1	Reactor Vessel Internals (TRL 6 - 7)
2	Qualification of composite materials
3	Test item procurement
4	Update of test plan
5	Test procedure development
6	Test facility identification and contracting
7	Test setup and installation
8	Test
9	Data analysis
10	Reporting
11	Data collection for conduction cooldown analyses
12	Test item design
13	Test item procurement
14	Update of test plan
15	Test procedure development
16	Test facility identification and contracting
17	Test setup and installation
18	Test
19	Data analysis
20	Reporting

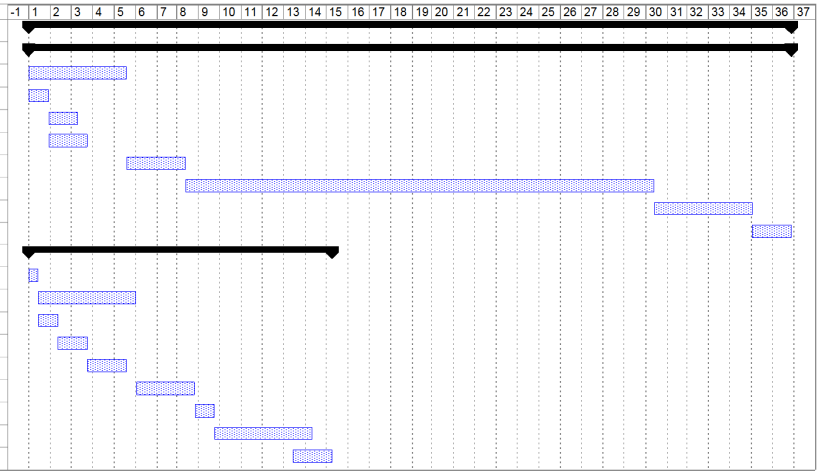

Fig. A-6: Test Schedule for Reactor Internals for TRL from 6 to 7

APPENDIX B: REACTOR CORE TEST PLANS

B.1 Reactor Core Test Plan (TRL 4 to 5)

NGNP Nuclear Heat Supply System

Test Plan for Reactor Core

TRL 4 to 5

Introduction

The Reactor Core Test Plans cover the neutronic, thermal hydraulic, and structural features of the prismatic core proposed for the NGNP. The core design is based on similar components and technology successfully demonstrated at Fort Saint Vrain. The annular prismatic core design is illustrated in Figure B-1.

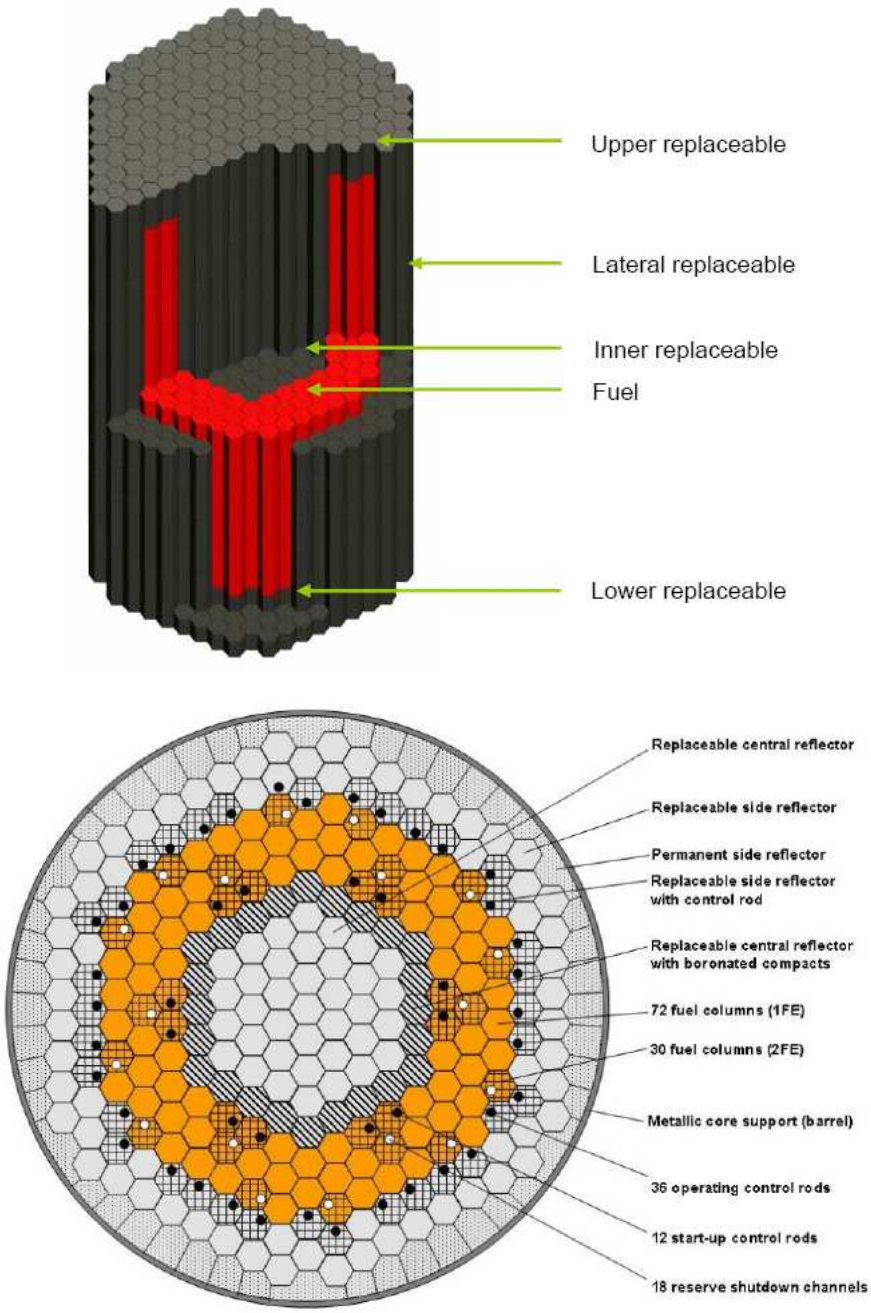

Fig. B-1: Annular Prismatic Core Design

Technology Description and Readiness Level

Plant:	NGNP
Area:	Nuclear Heat Supply System
System:	Reactor System
Subsystem/Structure:	N/A
Component:	Reactor Core

Technology Readiness Level

Current TRL:	4
Next TRL:	5

Required Tests to Achieve Next TRL

Test 1: Qualification of Nuclear Grade Graphite

The activities necessary for qualification of appropriate sources of nuclear grade graphite for use in the NGNP are currently addressed in an ongoing program being conducted by the INL as part of the overall NGNP program. Thus, specific test details and requirements are not included in this test plan.

AREVA has identified two types of graphite that are its preferred grades based on work done in France. These types are NBG-17 and PCEA, for fuel blocks and reflectors, respectively. Based on the current understanding of the INL graphite program, PCEA appears to be fully included in the qualification activities. However, NBG-17 appears to have been included to a much lesser extent. AREVA recommends the full inclusion of NBG-17 in the INL graphite qualification program.

B.2 Reactor Core Test Plan (TRL 5 to 6)

NGNP Nuclear Heat Supply System

Test Plan for Reactor Core

TRL 5 to 6

Introduction

The Reactor Core Test Plans cover the neutronic, thermal hydraulic, and structural features of the prismatic core proposed for the NGNP. The core design is based on similar components and technology successfully demonstrated at Fort Saint Vrain. The annular prismatic core design is illustrated in Figure B-1.

Technology Description and Readiness Level

Plant:	NGNP
Area:	Nuclear Heat Supply System
System:	Reactor System
Subsystem/Structure:	N/A
Component:	Reactor Core

Technology Readiness Level

Current TRL:	5
Next TRL:	6

Required Tests to Achieve Next TRL

Test 1: Design Components

The activities necessary for achieving the next level of technology development is to produce near-final designs of fuel blocks for design and performance acceptability evaluation. These activities are design activities. Specific test details and requirements are not included in this test plan. The results of these activities will be used to develop detailed test plans for bypass flow testing and demonstrating thermomechanical and structural integrity testing of the fuel blocks, which is required before using the graphite in the NGNP core.

B.3 Reactor Core Test Plan (TRL 6 to 7)

NGNP Nuclear Heat Supply System

Test Plan for Reactor Core

TRL 6 to 7

Introduction

The Reactor Core Test Plans cover the neutronic, thermal hydraulic, and structural features of the prismatic core proposed for the NGNP. The core design is based on similar components and technology successfully demonstrated at Fort Saint Vrain. The annular prismatic core design is illustrated in Figure B-1.

Technology Description and Readiness Level

Plant:	NGNP
Area:	Nuclear Heat Supply System
System:	Reactor System
Subsystem/Structure:	N/A
Component:	Reactor Core

Technology Readiness Level

Current TRL:	6
Next TRL:	7

Required Tests to Achieve Next TRL

Three tests are required for the Reactor Core design to achieve a TRL of 7. They are:

Test 1: Bypass Flow Testing

Test 2: Thermomechanical Testing

Test 3: Structural Integrity Testing

These are the only tests presently considered to be necessary. During the design process it is expected that other development needs will be uncovered and that these needs would extend the range of tests covered by this test plan.

Test 1: Bypass Flow Testing

Test Objective

The objective of this test is to determine the bypass flow behavior of the helium coolant within the core structure and establish the ranges of bypass flow expected in the NGNP. Detailed information is required on specific localized behavior, which can be obtained in a series of separate tests. That data can be used to develop integrated models to predict overall system behavior. The results of the test will be used to validate the thermal hydraulic design codes used to establish the core performance of the initial and subsequent core loadings.

Test Conditions

The prismatic blocks are assembled on a pitch that allows for an amount of clearance at cold conditions to aid in the core loading. At normal operating conditions thermal expansion of the graphite material would be expected to close these gaps. However, it is conceivable that full closure may not occur on every interface and that an amount of bypass flow will occur through these gaps. Similarly, bypass flow may occur in the axial gap at the interface between blocks within a column. These interface gaps would be unintentional sources of bypass flow and will vary with core temperature and core depletion conditions. For this testing, the blocks would be manufactured to simulate irradiated conditions rather than using actual irradiated blocks. The blocks would be manufactured using normal manufacturing tolerances for the top, bottom, and sides. The axial gap will not change significantly during operation and does not require testing.

There are intentional sources of bypass flow such as the flow that cools the reactivity control channels and the flow that cools the reflector blocks. All of these sources of bypass flow must be characterized in order to validate the analytical predictions of the core cooling.

The bypass testing will cover the full temperature and flow rate ranges of the expected NGNP operation during startup and normal operating conditions as described in the table below.

Table B-1: Test Conditions

Upper Temperature Bound (℃)	1200
Lower Temperature Bound (℃)	20
Upper Mass Flow Rate (kg/s)	3.0
Lower Mass Flow Rate (kg/s)	0.1

It may not be necessary to cover the full range unless the elevated temperatures have a significant impact on the ability of the design codes to predict the hydraulic behavior of the core.

Several combinations of geometry will need to be explored to assess a diverse set of conditions that could occur in the core. For instance, it is conceivable that a gap could run along the entire length of

the active core or only exist at a single axial elevation. A synthesis of separate effects tests would be expected to yield the data necessary to generate a reasonable bypass model.

Setup Requirements

A helium test facility is required in order to perform the bypass testing of the prismatic core blocks. The facility needs to operate over the range described above. The following list provides a sample of the test equipment that should be available to support the tests:

- Pressure and differential pressure sensors
- Flow meters
- Thermocouples

Other equipment may be needed as determined during the design process.

Proposed Test Location

To date no particular test facility has been found to meet the criteria of this test. Therefore, it is recommended that tests in helium be conducted by a laboratory with relevant expertise and capabilities.

Test Duration

The bypass flow testing should be completed prior to the start of final design activities. The schedule for this development program is expected to take approximately 13 months. A schedule of all tests required to move from TRL 6 to TRL 7 is shown in Fig. B-2.

Measured Parameters

The following parameters are presently considered to be necessary to measure:

- Flow distribution in coolant channels at inlet of each block in column stack
- Flow distribution in coolant channels at outlet of each block in column stack
- Flow through bypass regions
- Pressure drop across core blocks

This list will expand if further data are found to be required during the detailed design activities.

Data Requirements

All data are to be collected in a manner compliant with NQA-1. The necessary accuracy of the measurements will be determined in conceptual design.

Deliverables

The following deliverables, at a minimum, will be required to document the results of the testing:

- Raw test data
- Bypass flow as a function of block temperature
- Characterization of flow induced vibration
- Boundary conditions imposed by flow induced vibration and lift forces
- Inlet and outlet flow distributions

Test 2: Thermomechanical Testing

Test Objective

The objective of this test is to determine the thermomechanical behavior of the prismatic core blocks to be used in the NGNP. The heat and stress distributions within a core block for both symmetric and asymmetric heating profiles will be investigated. The results of these tests will be used to verify that material property limits of the graphite will not be violated and to validate the thermomechanical design codes used to establish the core performance of the initial and subsequent core loadings.

Test Conditions

For symmetric conditions the heat distribution is expected to be uniform but a thermal gradient from one side of a block to another or radially from the center may have an impact on the thermomechanical stresses within the block. Any variation due to the heat distribution should be characterized in order to validate analytical predictions of the core structural performance.

The expectation for the test would be that a representative graphite prismatic block would be loaded with resistive heaters rather than fuel compacts. These resistive heaters would be used to create the heat distribution within the block. Temperatures within each of the coolant channels and within the block would be measured to establish the heat distribution in the block. The test shall cover a significant portion of the full temperature and flow rate range of expected NGNP operation during startup and normal operating conditions as described in the table below.

Table B-2: Test Conditions

Upper Temperature Bound (℃)	1200
Lower Temperature Bound (℃)	20
Upper Mass Flow Rate (kg/s)	3.0
Lower Mass Flow Rate (kg/s)	0.1
Average Heat Generation per Block (kW)	500
Radial Peaking Upper Bound	1.5
Radial Peaking Lower Bound	0.5

It may not be necessary to cover the full range unless the elevated temperatures have a significant impact on the ability of the design codes to predict the thermal behavior of the core blocks.

Setup Requirements

A helium test facility is required to perform the thermal testing of the prismatic core blocks. The facility needs to operate over the range described above. The following list provides a sample of the test equipment that should be available to support the tests:

- Pressure and differential pressure sensors
- Flow meters
- Thermocouples

Other equipment may be needed as determined during the design process.

Proposed Test Location

No particular test facility has been found to meet the criteria of this test. Therefore, it is recommended that the tests in helium be conducted by a laboratory with relevant expertise and capabilities.

Test Duration

The thermal testing should be completed prior to the start of final design activities. The schedule for this development program is expected to take approximately 15 months. A schedule of all tests required to move from TRL 6 to TRL 7 is shown in Fig. B-2.

Measured Parameters

The following parameters are presently considered to be necessary to measure:

- Flow and temperature distribution in coolant channels at inlet of block
- Flow and temperature distribution in coolant channels at outlet of block
- Temperature distribution within block
- Stress distribution within the block

This list will expand if further data are found to be needed during the detailed design activities.

Data Requirements

All data are to be collected in a manner compliant with NQA-1. The necessary accuracy of the measurements will be determined in conceptual design.

Deliverables

The following deliverables, at a minimum, will be required to document the results of the testing:

- Raw test data
- Temperature distribution within block
- Enthalpy rise within each coolant channel

Test 3: Structural Integrity Testing

Test Objective

The objective of this testing is to determine the structural behavior of the prismatic core blocks to be used in the NGNP. The following are two main concerns:

- Potential block damage during loading and unloading
- Structural integrity of alignment pins during seismic events

The results of these tests will be used to verify the block design is sufficiently robust so damage to the blocks will not occur during routine maneuvers and so the overall core geometry will not be disrupted during a seismic event.

Test Conditions

The loading and unloading test can be performed with a mockup to determine allowable transport speeds of the blocks. This can be performed at ambient conditions.

The alignment pin test shall be conducted at ambient conditions with representative prismatic blocks. The seismic loads should cover the range the reactor is designed to withstand.

Setup Requirements

A seismic shake table test facility is required to perform the seismic testing of the prismatic core blocks. The facility can operate at ambient conditions. The following list provides a sample of the test equipment that should be available to support the tests:

- Accelerometers
- Strain gauges

The loading and unloading test does not require any special test facilities other than an overhead crane capable of supporting a core block.

The following list provides a sample of the test equipment that should be available to support the tests:

- Accelerometers
- Strain gauges

Proposed Test Location

It is recommended that the seismic test be conducted by a facility with seismic test equipment capable of handling the mass and dimensions of a limited assembly of core blocks.

The loading and unloading test can be performed at any number of commercial, laboratory, or university facilities.

Test Duration

The structural testing should be completed prior to the start of final design activities. The schedule for this development program is expected to take approximately nine months. A schedule of all tests required to move from TRL 6 to TRL 7 is shown in Fig. B-2.

Measured Parameters

The following parameters are presently considered necessary to measure:

- Stress distribution within blocks
- Damage to blocks
- Shearing of alignment pins

This list will expand if further data are found to be needed during the detailed design activities.

Data Requirements

All data shall be collected in a manner compliant with NQA-1. The necessary accuracy of the measurements will be determined in conceptual design.

Deliverables

The following deliverables will be required to document the results of the testing:

- Raw test data
- Stress distribution within blocks
- Documentation of visual inspection of damage to blocks or alignment pins (photographs, digital images, etc.)

ID	Task Name
1	Reactor Core Design Features (TRL 6-7)
2	Bypass flow testing
3	Test item design
4	Test item procurement
5	Update of test plan
6	Test procedure development
7	Test facility identification and contracting
8	Test setup and installation
9	Test
10	Test item removal
11	Test item inspection
12	Data analysis
13	Reporting
14	Thermo-mechanical testing
15	Test item design
16	Test item procurement
17	Update of test plan
18	Test procedure development
19	Test facility identification and contracting
20	Test setup and installation
21	Test
22	Test item removal
23	Test item inspection
24	Data analysis
25	Reporting
26	Structural integrity testing
27	Test item design
28	Test item procurement
29	Update of test plan
30	Test procedure development
31	Test facility identification and contracting
32	Test setup and installation
33	Test
34	Test item removal
35	Test item inspection
36	Data analysis
37	Reporting

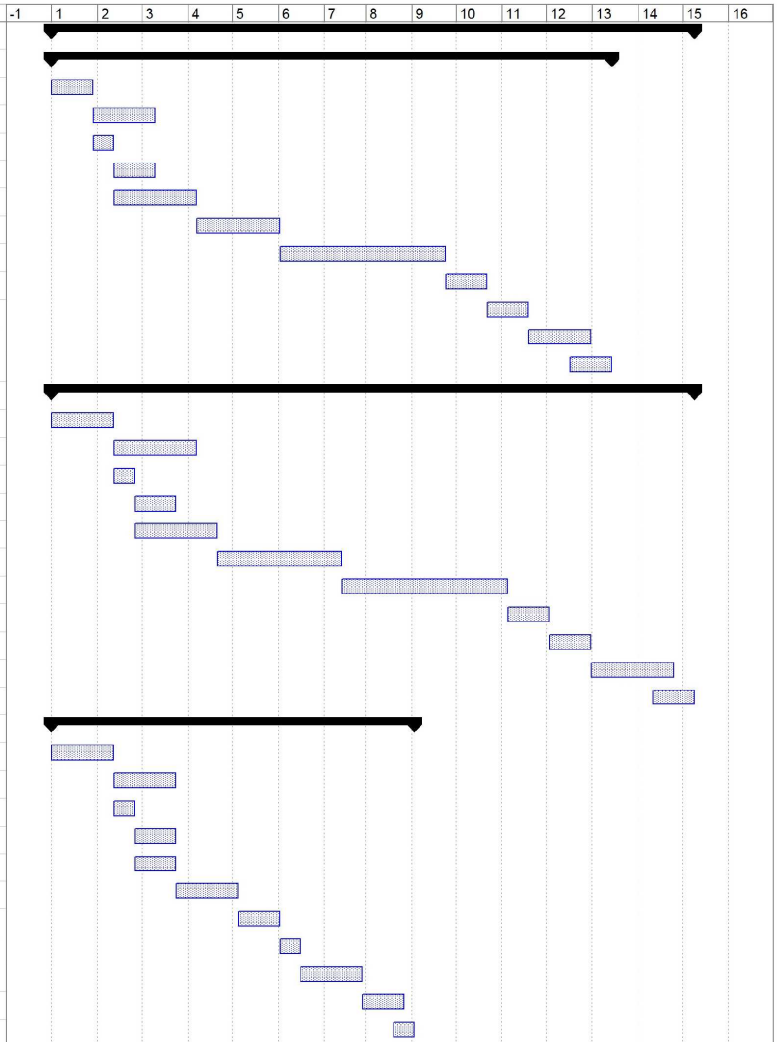

Fig. B-2: Test Schedule for Reactor Core for TRL from 6 to 7

APPENDIX C: CONTROL ROD DRIVES TEST PLANS

C.1 Control Rod Drives Test Plan (TRL 4 to 5)

NGNP Nuclear Heat Supply System

Test Plan for the Control Rod Drives TRL 4 to 5

Introduction

The Control Rod Drives provide for controlling the reactivity rate within the Reactor Core. This PASSC consists of the control rods, control rod guide tubes, and the control rod drive mechanism (CRDM). The Control Rod Drives include 12 start-up control rods located in the inner ring of fuel blocks and 36 operating control rods located in the inner ring of the outer graphite reflector. The Control Rod Drives also include guide tubes and the CRDM to properly position the control rods in the core. The CRDM includes a cable, drum drive, position indicator, and cable force sensor.

The control rods are a string of approximately 18 annular canisters with articulating joints between adjacent canisters. The canisters are constructed with cladding on the inside and outside to contain annular compacts of the boron carbide absorber material. The cladding is vented to permit helium generated by the neutron absorbing process to discharge into the helium coolant. There is no pressure boundary in the control rod assembly. The articulating joint configuration allows the control rod assembly to flex around bends in the channels within the columns of the graphite blocks. A cable connected to the CRDM runs through the center of the string of canisters, providing primary axial support. The following three materials are candidates for the control rod cladding, end caps, and articulating connectors: Alloy 800H, C/C composite, and SiC/SiC composite. A decision on the material to be used for the control rod canisters and connectors will be required. The control rod design is illustrated in Fig. C-1.

The guide tubes are located in the upper plenum and extend from the stand pipes to the top reflector blocks within the Reactor Core. The tubes will protect the control rod assemblies and guide them into channels within designated fuel and reflector core blocks. The two material options being considered for the guide tubes are Alloy 800H and C/C composites.

This test plan describes development and testing activities that must be conducted to advance the Technology Readiness Level (TRL) for the control rods, guide tubes, and the CRDM cable from the current TRL rating of 4 to a rating of 5.

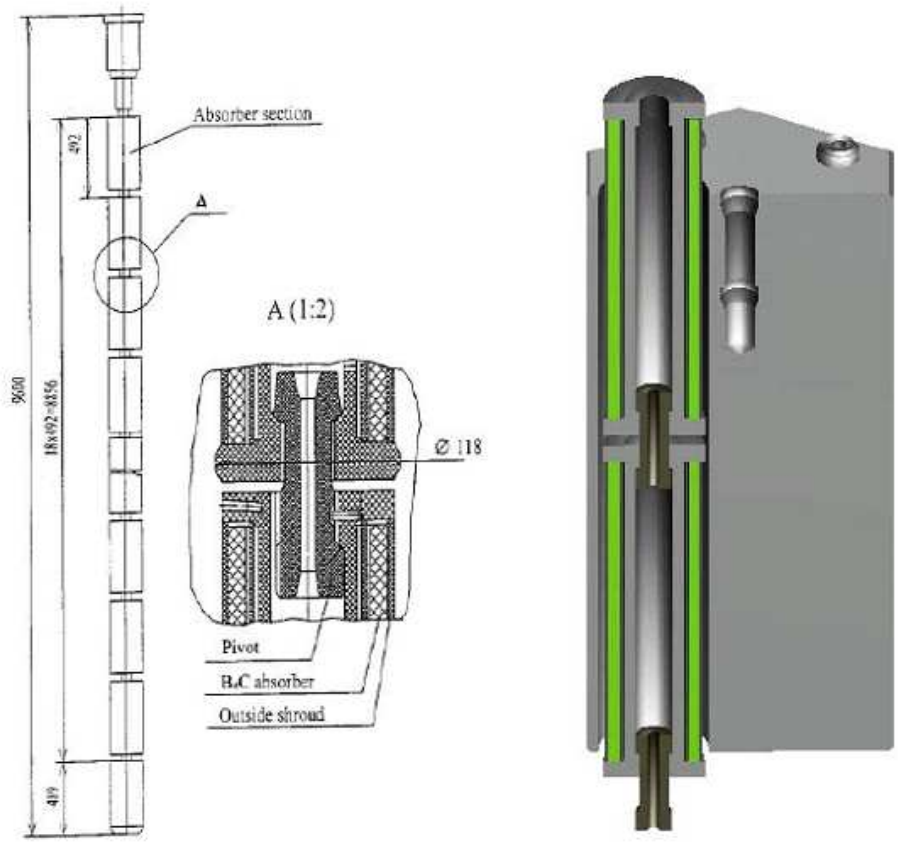

Fig. C-1: Segmented Control Rod Design

Technology Description and Readiness Level

Plant:	NGNP
Area:	Nuclear Heat Supply System
System:	Reactor System
Subsystem/Structure:	N/A
Component:	Control Rod Drive

Technology Readiness Level

Current TRL:	4
Next TRL:	5

Required Tests to Achieve Next TRL

Three primary tasks must be conducted to achieve a TRL of 5 for the Control Rod Drives. These tasks address each of the three components identified above. Design, analysis, and testing will be required for each of the following tasks:

Test 1: Design, development and demonstration of control rod elements

Test 2: Design, development and demonstration of guide tubes

Test 3: Selection of CRDM cable material

Test 1: Design, Development and Demonstration of Control Rod Elements

Test Objective

To develop and demonstrate the control rod canisters and articulating connectors for the NGNP Control Rod Drives, the following activities and tests must be conducted:

- Perform modeling and analysis of the reactor to define the performance envelope for the control rod elements (canisters, springs, and connectors), including the maximum normal and off-normal temperatures, the primary coolant chemistry (i.e., the maximum and minimum helium impurity concentration), and the maximum neutron flux and fluence for the operating control rods.
- Perform design analyses for Alloy 800H control rods to define their performance envelope, including exposure to off-normal conditions.
- Conduct limited testing for C/C and SiC/SiC composites to obtain the necessary data to support design analyses.
- Perform conceptual design and analyses for C/C and/or SiC/SiC composite control rods.
- Survey potential component manufacturers to assess availability and costs for control rods produced from each material.
- Further develop and demonstrate control rod elements for the selected material.

Test Conditions

Limited testing must be conducted for C/C and SiC/SiC composites to obtain the data needed to support conceptual design analyses to achieve the objective of developing and demonstrating the control rod canisters and articulating connector for the NGNP Control Rod Drives. Specifically, physical properties, mechanical properties, and environmental stability (helium environment and irradiation) over the range of expected operating conditions will be required. It is possible that completion of key testing activities already underway within the national laboratories for baseline C/C and SiC/SiC composite materials will provide sufficient data.

Test Configuration

Testing to obtain physical and mechanical property data and to evaluate environmental stability (including helium environment and irradiation) will be performed on small specimens specifically designed for the test, per ASTM standards. Because the type of fiber and architecture is highly dependent upon the particular part being fabricated, these tests will be conducted on a range of components that incorporate different fibers, different matrices, and different fiber architectures to determine the best composite material. The precise requirements for representative specimens can only be achieved through discussions with the composite manufacturer. It is anticipated that most of these tests will involve specimens cut from larger components fabricated for the test program. Some

tests, such as tensile strength and creep, may utilize individual specimens specifically designed and manufactured for the tests.

Proposed Test Location

Testing of materials to support conceptual design analyses of the selected material will primarily be conducted by the national laboratories that are already involved in the NGNP materials testing program. The INL, ORNL and PNNL will perform most of the material testing along with support from other universities and laboratories (e.g., for round-robin testing).

Limited testing of components, and associated nondestructive examination, will likely be performed by the manufacturer(s) providing the selected material.

Test Duration

A schedule for the development and testing required to move from TRL 4 to TRL 5 is shown in Fig. C-2. Tests to obtain data for physical and mechanical properties will generally be short term. Tests involving irradiation of specimens, time-dependent failure or oxidation will require longer time periods.

Measured Parameters

Measurements of the following properties over the range of anticipated reactor operating conditions (including irradiation and bounding case helium environments) will need to be obtained for the materials to support conceptual design analyses (for the selected material):

- Physical Properties
  - Micro-structural Characteristics
  - Meso-structural Characteristics – includes flaw detection using nondestructive examination methods
  - Mass and Dimensions
  - Thermal Expansion
  - Thermal Conductivity
  - Specific Heat
- Mechanical Properties
  - Elastic Constants
  - Strength Values
  - Fracture Toughness
- Environmental Stability
  - Oxidation/Corrosion
- Time-dependent Failure – including creep deformation and slow crack growth

All test conditions and resulting material response will need to be measured and recorded.

Data Requirements

The data used to support conceptual design efforts will not have to meet formal quality standards. However, the data needs to be of sufficient quality to support the selection of one material for further development and demonstration of control rod components.

All parameters must be measured and recorded with a level of accuracy that is to be determined in conceptual design to support the codification effort. All data shall be collected in a manner compliant with NQA-1.

Deliverables

The deliverables for the testing efforts will be data used for conceptual and preliminary design. The data will be documented in test reports.

Test 2: Design, Development and Demonstration of Guide Tubes

Test Objective

To develop and demonstrate guide tubes for control rods, the following activities and tests must be conducted:

- Perform modeling and analysis of the reactor to define the envelope of operating conditions for the guide tubes including the maximum normal and off-normal temperatures, the primary coolant chemistry (i.e. maximum and minimum helium impurity concentration), and the maximum neutron flux and fluence for the operating control rods.
- Perform design analyses for Alloy 800H guide tubes to define their performance envelope, including exposure to accident conditions.
- If C/C composites are selected, further develop and demonstrate the guide tubes. This will require the following activities and tests:
    - Conduct limited testing for C/C composites to obtain the necessary data to support conceptual design analyses. Physical properties, mechanical properties and environmental stability over the range of expected operating conditions will be required. It is possible that completion of key testing activities already underway within the national laboratories for baseline C/C composite will provide sufficient data.
    - Preliminary design and analysis for guide tubes.

Test Conditions

Achieving the objective of developing and demonstrating guide tubes will require testing of a C/C composite, assuming this material was not selected for control rods. If this material is a C/C composite, it is possible the selected material will not replicate one of baseline materials already being tested by INL and ORNL. Thus, it is likely a full range of tests will be required to obtain data for physical properties, mechanical properties, and environmental stability over the range of expected operating conditions. Furthermore, the testing effort will need to include support for developing ASTM standards and an ASTM material specification.

Test Configuration

Testing to obtain physical and mechanical property data and to evaluate environmental stability will be performed on small specimens specifically designed for the test, per ASTM standards. Because the type of fiber and architecture is highly dependent upon the particular part being fabricated, these tests will be conducted on a range of components that incorporate different fibers, different matrices, and different fiber architectures to determine the best composite material. The precise requirements for representative specimens can only be achieved through discussions with the composite manufacturer. Most of these tests will involve specimens cut from larger components fabricated for the test program. Some tests, such as tensile strength and creep, may use individual specimens specifically designed and manufactured for the tests.

Proposed Test Location

Testing of the selected material will primarily be conducted by the national laboratories involved in the NGNP materials testing program. The INL, ORNL and PNNL will perform most of the material testing along with support from other universities and laboratories (e.g., for round-robin testing).

Limited testing of guide tubes, and associated nondestructive examinations, will likely be performed by the manufacturer(s) providing the selected material. Further testing of guide tube sections and joints will be performed in a facility designed specifically for such testing. This facility could be located at the INL, the manufacturer's site, or another appropriate facility.

Test Duration

A schedule for the development and testing required to move from TRL 4 to TRL 5 is shown in Fig. C-2. Tests to obtain data for physical and mechanical properties will be short term. Tests involving irradiation of specimens, time-dependent failure, or oxidation will require longer time periods.

Measured Parameters

The data and other parameters to be measured for guide tubes are similar to those described above for control rod materials and components.

Data Requirements

All parameters must be measured and recorded with a level of accuracy to be determined in conceptual design. All data shall be collected in a manner consistent with NQA-1.

Deliverables

The deliverables for the testing efforts will be data used for conceptual and preliminary design and for codification. The data will be documented in test reports.

Test 3: Selection of CRDM Cable Material

Test Objective

To evaluate candidate materials and select a cable material for the CRDM cable, the following activities and tests must be performed:

- Establish design criteria and select candidate cable materials
- Perform testing of candidate materials to determine high temperature strength, creep behavior, and environmental stability. Depending on the cable material chosen and the actual environment to which the cables will be exposed, no further development work may be necessary.
- Perform testing of materials to assess irradiation effects on high temperature strength, creep and environmental stability.

Test Conditions

The operating control rods will be used for reactivity control during normal reactor operation and thus will often be partially inserted into the core. Hence, the cable will be exposed to relatively high temperatures and neutron fluence if the cable runs through the control rod elements and is attached to a bottom end cap. During conduction cooldown accidents, the cable may be exposed to very high temperatures. It is expected the cable materials will be super-alloys capable of performing at high temperatures within the Reactor Core. While significant property data exists for Alloy 800H, irradiation performance data for other materials (e.g., PE-16, PM2000 (ODS)) are very limited. Thus, short-term and long-term tests at high temperatures in a helium atmosphere and with irradiation will be required to obtain the performance data necessary to determine the best cable material. Test conditions will need to address normal operating conditions and off-normal conditions.

Test Configuration

Testing to obtain key physical and mechanical property data and to evaluate time-dependent failure (creep, oxidation) will be performed on small cable specimens specifically designed for the test, per ASTM standards. Special test fixtures and containment capsules will be designed and constructed to permit assessment of key properties and time-dependent failure behavior as a function of temperature and fluence. The testing hardware may be similar in design to that previously deployed.

Proposed Test Location

Testing of the candidate cable materials will primarily be conducted by national laboratories already involved in the NGNP materials testing program. Irradiation of specimens will be performed at INL or ORNL, followed by post-irradiation testing and examination, as appropriate. High temperature tests that do not involve irradiation of materials may be performed at the national laboratories or at other appropriate test facilities.

Test Duration

A schedule for the testing required to move from TRL 4 to TRL 5 is shown in Fig. C-2. Most of the tests will be directed at time-dependent failure behavior and thus will involve long testing periods.

Measured Parameters

Testing will be performed primarily for the purpose of providing the necessary performance data to support a decision on the most suitable cable material. The intent will be to obtain data to fill gaps in the existing database. Testing will be performed on unirradiated and irradiated specimens to obtain physical and mechanical property data to characterize environmental stability and time-dependent failure for a range of normal and off-normal conditions.

Data Requirements

All parameters must be measured and recorded in a manner consistent with NQA-1 quality requirements to support the materials selection effort and subsequent codification of the chosen material.

Deliverables

The deliverables for the material testing efforts will be data used for the material selection process and subsequently for preliminary design and codification. The data will be documented in test reports.

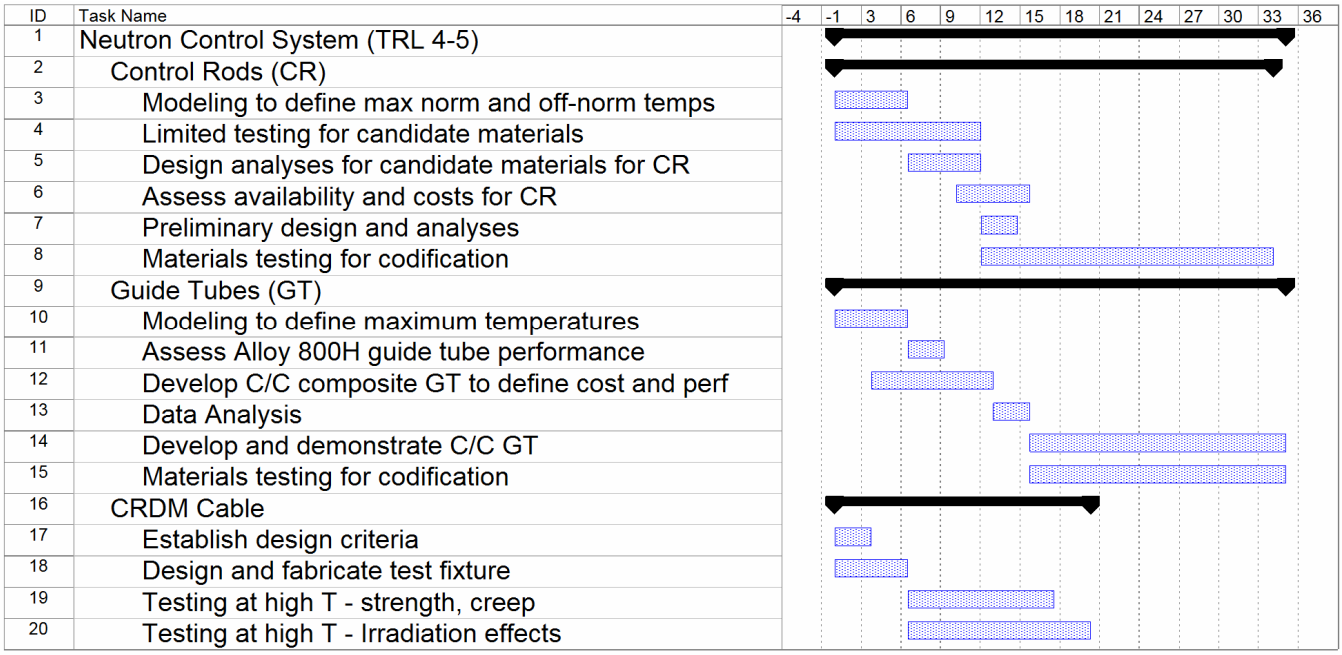

Fig. C-2: Test Schedule for Control Rod Drives for TRL from 4 to 5

C.2 Control Rod Drives Test Plan (TRL 5 to 6)

NGNP Nuclear Heat Supply System

Test Plan for the Control Rod Drives TRL 5 to 6

Introduction

The Control Rod Drives provide for controlling the reactivity rate within the Reactor Core. This PASSC consists of the control rods, control rod guide tubes, and the control rod drive mechanism (CRDM). The Control Rod Drives include 12 start-up control rods located in the inner ring of fuel blocks and 36 operating control rods located in the inner ring of the outer graphite reflector. The Control Rod Drives also include guide tubes and the CRDM to properly position the control rods in the core. The CRDM includes a cable, drum drive, position indicator, and cable force sensor.

The control rods are a string of approximately 18 annular canisters with articulating joints between adjacent canisters. The canisters are constructed with cladding on the inside and outside to contain annular compacts of the boron carbide absorber material. The cladding is vented to permit helium generated by the neutron absorbing process to discharge into the helium coolant. There is no pressure boundary in the control rod assembly. The articulating joint design allows the control rod assembly to flex around bends in the channels within the columns of the graphite blocks. A cable connected to the CRDM runs through the center of the string of canisters, providing primary axial support. The following three materials are candidates for the control rod cladding, end caps, and articulating connectors: Alloy 800H, C/C composite, and SiC/SiC composite. A decision on the material to be used for the control rod canisters and connectors will be required. The control rod design is illustrated in Fig. C-3.

The guide tubes are located in the upper plenum and extend from the stand pipes to the top reflector blocks within the Reactor Core. The tubes will protect the control rod assemblies and guide them into channels within designated fuel and reflector core blocks. The two material options being considered for the guide tubes are Alloy 800H and C/C composites.

This test plan describes development and testing activities that must be conducted to advance the Technology Readiness Level (TRL) for the Control Rod Drives to move from the current TRL rating of 5 to a rating of 6.

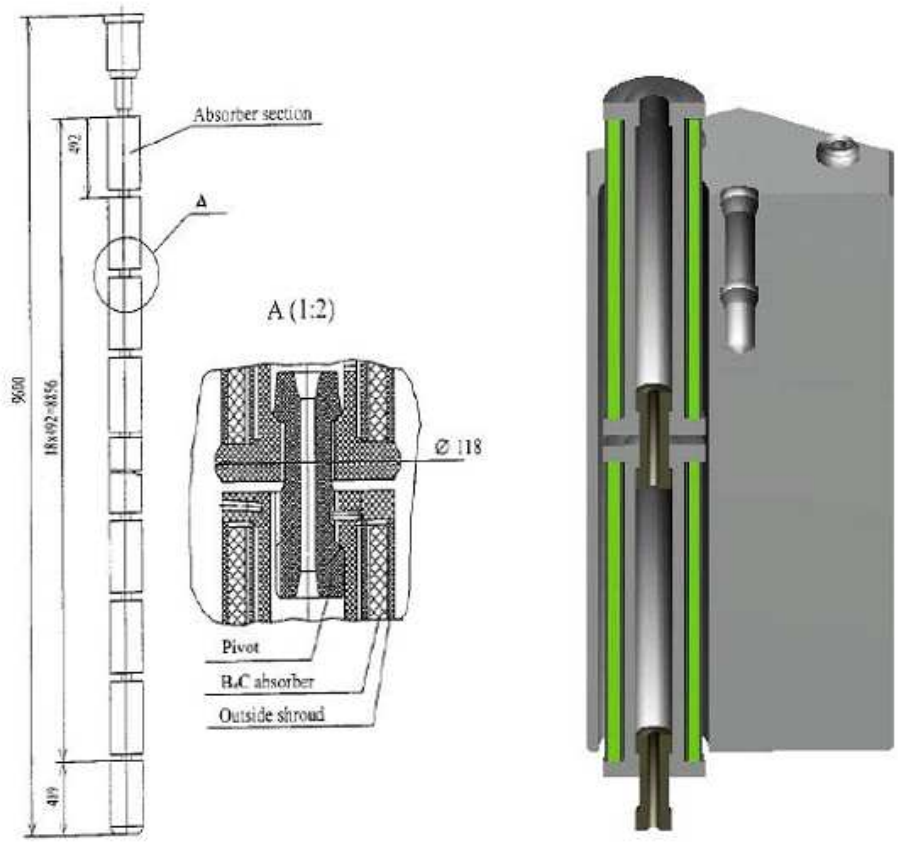

Fig. C-3: Segmented Control Rod Design

Technology Description and Readiness Level

Plant:	NGNP
Area:	Nuclear Heat Supply System
System:	Reactor System
Subsystem/Structure:	N/A
Component:	Control Rod Drive

Technology Readiness Level

Current TRL:	5
Next TRL:	6

Required Tests to Achieve Next TRL

The following test must be conducted to achieve a TRL of 6 for the Control Rod Drives.

Test 1: Design, development and demonstration of control rod elements

Test 1: Design, Development and Demonstration of Control Rod Elements

Test Objective

To develop and demonstrate the NGNP control rod elements, the following activities and tests must be conducted:

- Development and demonstration of control rod elements (canisters, springs, and connectors).
  - Design and fabrication of fixtures and the facility for testing individual components of a complete control rod element under reactor operating conditions. Design and fabrication of fixtures and related equipment for irradiation of control rod components will also be required.
  - Fabrication and qualification testing for canisters and connectors, including interaction of the boron carbide absorber with the control rod cladding.
  - Assembly and testing of control rod element components under normal and off-normal reactor operating conditions (temperature, imposed loads, helium atmosphere).
- Development and demonstration of guide tubes
  - Design and fabrication of fixtures and the facility for testing full-length guide tubes.
  - Fabrication and testing of full-length guide tubes, including the stand-pipe interface (mechanical, thermal, helium environment).
  - Evaluation of friction and wear due to control rods and the reflector block interface.

Test Conditions

To achieve the objective of developing and demonstrating the control rod canisters and articulating connector for the NGNP Control Rod Drives, the following test conditions will be required:

- Development of the control rod assemblies will require testing at the component level and for complete control rod elements (canister, spring and connectors). If the materials and fabrication methods for the annular absorber compacts are similar to those used for prior designs, development testing will not be required to support the production of absorber elements. If a spring is included in the control rod canisters to restrain movement of the absorber elements during handling, testing will be required as part of the component and control rod element testing to validate selection of the spring material. Appropriate testing and nondestructive examination will be performed for canisters and connectors by the manufacturer. Further testing may be required for specimens extracted from these components to verify physical and mechanical properties. Extensive testing will be required for complete control rod elements to qualify the design and verify performance. Evaluation of nondestructive examination methods for detecting accumulated damage to the components during testing will be included. Irradiation of control rod components, followed by post-

irradiation examinations will also be required. These irradiation tests must include the boron carbide absorber inside the canisters to evaluate the interaction between the absorber and the cladding.

- Development of the guide tubes will require testing of full-length tubes over the full range of normal and off-normal operating conditions. Testing will be required to evaluate the mechanical interface between the standpipes and guide tubes. Testing will also be required to assess friction and wear due to movement of the control rods within the guide tubes (including FIV) and at the interface between the guide tubes and the upper core restraint blocks and/or top reflector blocks. Evaluation of nondestructive examination methods for detecting accumulated damage to the components during testing will be included.

Test Configuration

Physical and mechanical characterization of control rod components (absorber compacts, canister, connector, spring) will be performed by the manufacturer in conjunction with the fabrication and inspection operations. Testing will be performed separately to verify manufacturer data along with further testing over the range of operating conditions. Key tests for this development effort will be those performed for control rod components (e.g.,canisters and connectors). Testing under a range of temperatures, loads, and environmental conditions expected for control rod elements will be performed. The test facility will use a furnace chamber with internal hot zone dimensions of about 2 meters long and 15 cm in diameter with the capability for maintaining a helium environment ranging from very pure to impure to bound the potential NGNP primary coolant chemistry conditions. It is expected that one or more control rod components (e.g.,canisters and joints) will need to be irradiated, followed by appropriate post-irradiation examinations.

Testing of the guide tubes will require a number of test fixtures and associated facilities. An atmosphere-controlled furnace chamber having hot zone dimensions of 4-5 meters in length and about 20 cm in diameter will need to be constructed and instrumented to test a complete guide tube. This facility will need to be capable of exposing the guide tubes to a range of temperatures in a helium environment ranging from very pure to impure to bound the potential NGNP primary coolant chemistry conditions. Evaluation of the mechanical connection at the upper end of the guide tube (within the standpipe) will require assembly of the appropriate test fixtures and instrumentation with a controlled atmosphere chamber. High temperature furnaces will also need to be set up to evaluate friction and wear behavior between the guide tube and control rod elements and between the guide tube and interfacing components within the core (upper core restraints and top reflector blocks).

Proposed Test Location

Limited testing of components and associated nondestructive examination will likely be performed by the manufacturer(s) providing the selected material. Further testing of components and testing of CRDM and control rod element subassemblies will be performed in facilities designed specifically for such testing. Facilities capable of performing this testing exist in France or could be developed at the INL Component Test Facility (CTF) or at another location.

Test Duration

A schedule for the development and testing required to move from TRL 5 to TRL 6 is shown in Fig. C-4. Tests involving irradiation of specimens or time-dependent failure will require long time periods.

Evaluating the performance of components and subassemblies (control rod components) will involve a combination of short- and long-term tests.

Measured Parameters

The following properties values over the range of anticipated reactor operating conditions (including irradiation) will need to be obtained for the selected materials to support codification efforts:

- Physical Properties
  - Microstructure Characteristics
  - Meso-structural Characteristics – includes flaw detection using nondestructive examination methods
  - Mass and Dimensions
  - Thermal Expansion
  - Thermal Conductivity
  - Specific Heat
- Mechanical Properties
  - Elastic Constants
  - Strength Values
  - Fracture Toughness
- Environmental Stability
  - Oxidation/Corrosion
- Time-dependent Failure – includes creep deformation and slow crack growth

Details of the various tests for individual components and subassemblies (control rod components) will need to be defined. All test conditions and resulting material responses will need to be measured and recorded.

Data Requirements

Testing of individual components and subassemblies (control rod components) will be performed in a manner that confirms the preliminary design. All data shall be collected in a manner consistent with NQA-1.

Deliverables

Test reports will be required to document the fabrication development efforts, including inspections and the testing to characterize the components supplied by manufacturers. It is expected that nondestructive examination data will be supplied for structural components (e.g., control rod canisters and connectors, guide tubes).

Reports will also document the testing of the components and subassemblies (control rod components) performed in addition to testing by the manufacturer.

ID	Task Name
1	Neutron Control System (TRL 5-6)
2	Control rod development
3	Design and fabricate test fixtures
4	Canister and connector fabrication and testing
5	Ass'y and testing of CR components
6	Guide Tube Development
7	Design and fabricate test fixtures
8	Interface testing with stand pipe
9	Friction and wear due to CR (including FIV)
10	Fabrication and testing of full-length tubes

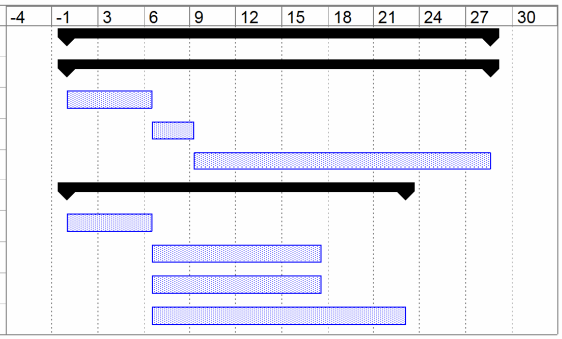

Fig. C-4: Test Schedule for Control Rod Drives for TRL from 5 to 6

C.3 Control Rod Drives Test Plan (TRL 6 to 7)

NGNP Nuclear Heat Supply System

Test Plan for the Control Rod Drives TRL 6 to 7

Introduction

The Control Rod Drives provide for controlling the reactivity rate within the Reactor Core. This PASSC consists of the control rods, control rod guide tubes, and the control rod drive mechanism (CRDM). The Control Rod Drives include 12 start-up control rods located in the inner ring of fuel blocks and 36 operating control rods located in the inner ring of the outer graphite reflector. The Control Rod Drives also include guide tubes and the CRDM to properly position the control rods in the core. The CRDM includes a cable, drum drive, position indicator, and cable force sensor.

The control rods are a string of approximately 18 annular canisters with articulating joints between adjacent canisters. The canisters are constructed with cladding on the inside and outside to contain annular compacts of the boron carbide absorber material. The cladding is vented to permit helium generated by the neutron absorbing process to discharge into the helium coolant. There is no pressure boundary in the control rod assembly. The articulating joint design allows the control rod assembly to flex around bends in the channels within the columns of the graphite blocks. A cable connected to the CRDM runs through the center of the string of canisters, providing primary axial support. The following three materials are candidates for the control rod cladding, end caps, and articulating connectors: Alloy 800H, C/C composite, and SiC/SiC composite. A decision on the material to be used for the control rod canisters and connectors will be required. The control rod design is illustrated in Fig. C-5.

The guide tubes are located in the upper plenum and extend from the standpipes to the top reflector blocks within the Reactor Core. The tubes will protect the control rod assemblies and guide them into channels within designated fuel and reflector core blocks. The two material options being considered for the guide tubes are Alloy 800H and C/C composites.

This test plan describes development and testing activities that must be conducted to advance the Technology Readiness Level (TRL) for the Control Rod Drives to move from the current TRL rating of 6 to a rating of 7.

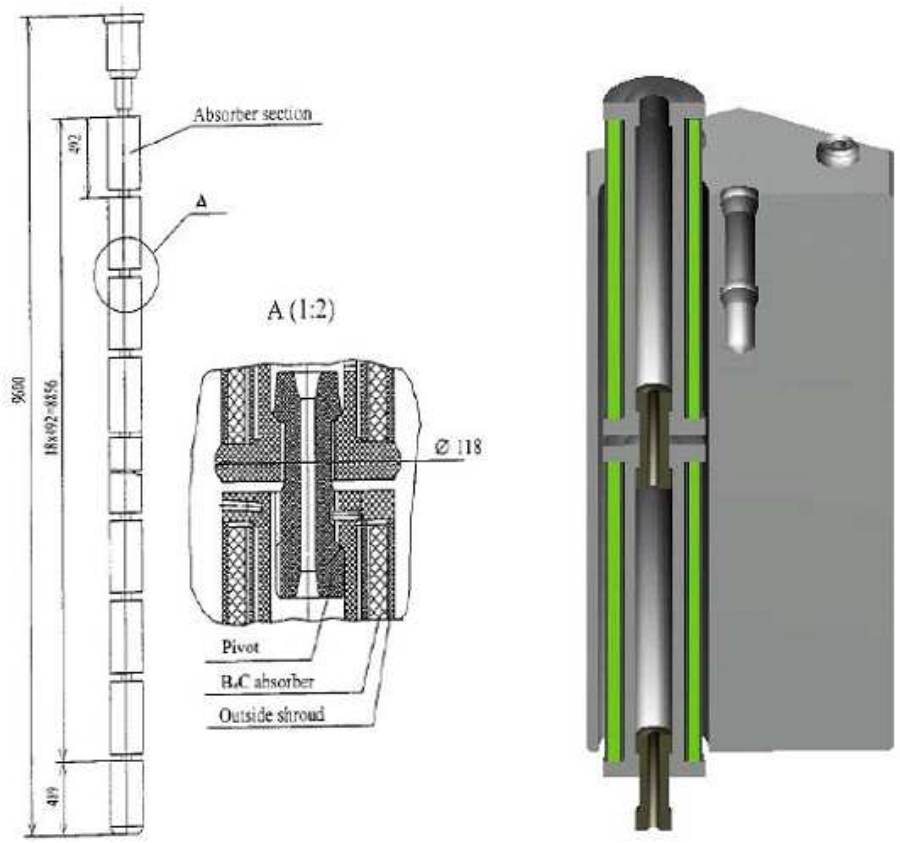

Fig. C-5: Segmented Control Rod Design

Technology Description and Readiness Level

Plant:	NGNP
Area:	Nuclear Heat Supply System
System:	Reactor System
Subsystem/Structure:	N/A
Component:	Control Rod Drive

Technology Readiness Level

Current TRL:	6
Next TRL:	7

Required Tests to Achieve Next TRL

One test must be conducted to achieve a TRL of 7 for the Control Rod Drives:

Test 1: Final Qualification of the Control Rod Drives

Test 1: Final Qualification of the Control Rod Drives

Test Objective

To qualify the Control Rod Drives for use in the NGNP reactor, the following activities and tests must be conducted:

- Fabricate and test control rod elements to verify design (loads, temperature, and helium atmosphere).
- Fabricate, test, and qualify Control Rod Drives under anticipated normal and off-normal conditions, including the wear and vibration effects of sustained operation.

Test Conditions

To achieve the objective of qualifying the NGNP Control Rod Drives, the following test conditions will be required:

- Qualification of the control rods will require further testing of complete control rod elements over the full range of normal and off-normal reactor operating conditions.
- Qualification of the Control Rod Drives will require assembly and testing of complete control rods (i.e., the full string of 18 canisters) connected through a cable to the CRDM under the full range of normal and off-normal reactor operating conditions.

Test Configuration

Testing of all Control Rod Drives subcomponents will be performed by the manufacturer in conjunction with fabrication and inspection operations. Testing will be performed independently to verify manufacturer data.

Testing of the complete Control Rod Drives, including the full control rod, a guide tube, a cable and the CRDM, will require the design and fabrication of a large test facility, including all of the associated test fixtures and instrumentation. To achieve the desired test environment, an atmosphere-controlled test section on the order of 15-20 meters high will be needed. The test will include control rod drop measurements. Reactor core blocks will be installed in the test facility for the rod to penetrate. The test will be conducted during normal, off-normal, and seismic conditions to verify that the control rod will enter the core in the required time.

Proposed Test Location

Qualification testing of the complete Control Rod Drives may be performed at the INL, using the CTF or similar facility to support the test.

Test Duration

A schedule for the development and testing required to move from TRL 6 to TRL 7 is shown in Fig. C-6.

Measured Parameters

Overall operation of the integrated Control Rod Drives will be observed and validated during the testing. The critical parameters during this test will be:

- Reliability of the PASSC
- Average time of entry for the control rod into the core during normal, off-normal, and seismic event conditions
- Assessment of potential for control rod wear, both internal wear between the components of the control rod and external wear between the control rod and its interfacing surfaces.

Data Requirements

Testing of the Control Rod Drives will be performed in a manner that confirms the final design and supports licensing. All data shall be collected in a manner consistent with NQA-1.

Deliverables

Test reports will be required to document the fabrication of key components, such as control rod canisters and connectors, guide tubes, and annular absorber compacts. The reports will include inspections and testing to characterize the components supplied by manufacturers. It is expected that nondestructive examination data will be supplied for structural components (e.g., control rod canisters and connectors, guide tubes).

Finally, reports will be required to document the final integrated testing of the Control Rod Drives.

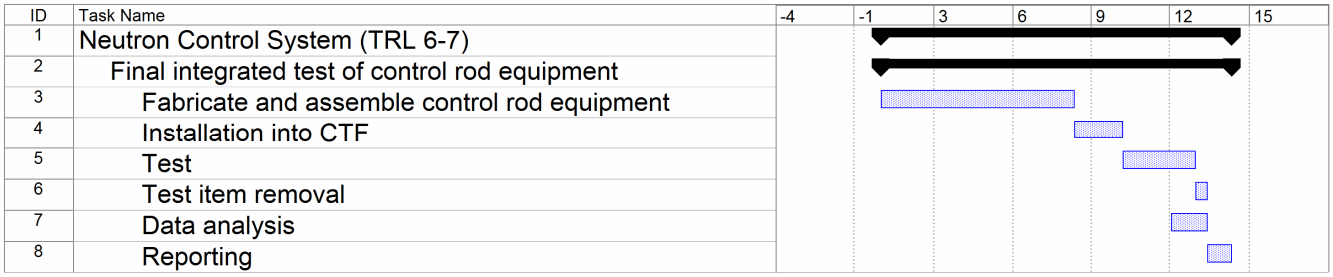

Fig. C-6: Test Schedule for Control Rod Drives for TRL from 6 to 7

APPENDIX D: REACTOR CAVITY COOLING SYSTEM TEST PLANS

D.1 Reactor Cavity Cooling System Test Plan (TRL 5 to 6)

NGNP Nuclear Heat Supply System

Test Plan for the Reactor Cavity Cooling System TRL 5 to 6

Introduction

The primary functions of the Reactor Cavity Cooling System (RCCS) are to protect the reactor cavity concrete, including Reactor Pressure Vessel (RPV) supports, from overheating during normal operation. The RCCS provides an alternate means of heat removal from the reactor system to the environment when neither the Main Heat Transport System nor the Shutdown Cooling System is available.

The RCCS, which receives heat transferred from the vessel, includes the cavity cooler panels. The cavity cooler panels form a closed tube wall that surrounds the RPV and functions as a compact air-to-water heat exchanger. The tubes are installed vertically and joined by welding to form a welded membrane panel wall. The RCCS is illustrated in Fig. D-1.

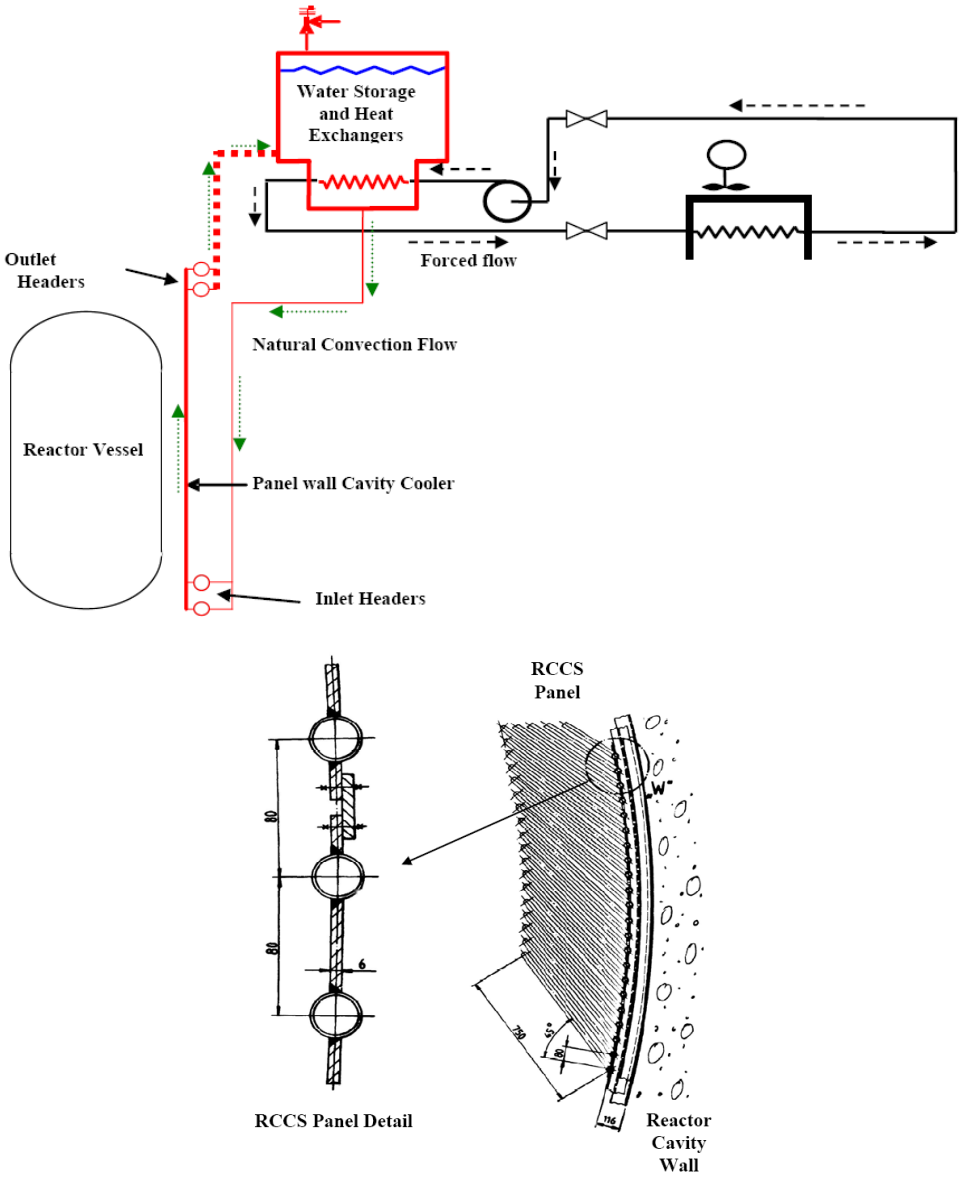

Fig. D-1: RCCS Layout

Technology Description and Readiness Level

Plant:	NGNP
Area:	Nuclear Heat Supply System
System:	Reactor System
Subsystem/Structure:	Reactor Cavity Cooling System
Component:	N/A

Technology Readiness Level

Current TRL:	5
Next TRL:	6

Required Tests to Achieve Next TRL

Two tests are required for the Cavity Cooler Panels to achieve a TRL of 6:

Test 1. Emissivity Behavior of RPV and RCCS Materials

Test 2. Effect of Particulates on Radiation Heat Transport

Test 1: Emissivity Behavior of RPV and RCCS Materials

Test Objective

The objective of this test is to determine the long-term emissivity behavior of the NGNP Reactor Pressure Vessel and Reactor Cavity Cooling System materials. The emissivity is critical to the thermal design of the RCCS.

The results of these tests will establish guidelines to be used for the analytical design of the RCCS components.

Test Conditions

The RPV material will be manufactured of either SA-508 or 9Cr1Mo steel. The RCCS cavity cooler panel is expected to be manufactured with steel tubing. Test coupons of each material will be tested in air over a range of temperatures for an extended time. The temperature range for each material is as follows:

Table D-1: Test Conditions

SA-508 coupons [℃]	20 – 540
Cavity Cooler Panel material [℃]	20 – TBD

Long-term testing will be performed at representative NGNP normal operating conditions. Short-term tests will be conducted at representative NGNP accident conditions. The required duration of the long- and short-term tests must be defined during conceptual design.

Test coupons should be tested in a facility capable of making accurate emissivity measurement.

Test Facility Requirements

A test facility capable of providing the required vacuum conditions is necessary. The test facility must have adequate instruments needed to perform the measurements for developing the emissivity data for the sample coupons. The following list specifies the test equipment that should be available to support the tests:

- Thermocouples
- Data acquisition and processing equipment

Other equipment may be necessary as determined during the design process.

Proposed Test Location

It is recommended that tests be conducted by a facility with relevant expertise and capabilities such as the High Temperature Materials Laboratory at the Oak Ridge National Laboratory.

Test Duration

The test duration is estimated to be approximately 11 months. A schedule of all tests required to move from TRL 5 to TRL 6 is shown in Fig. D-2.

Measured Parameters

The following parameters need to be measured:

- Surface temperature and emissivity of the emitting body as a function of temperature
- Surface temperature and emissivity of the absorbing body as a function of temperature
- Stability of the emissivity values over time and varying environmental conditions

Data Requirements

All parameters must be measured and recorded to a level of accuracy to be determined in conceptual design. All data shall be collected in a manner consistent with NQA-1.

Deliverables

The following deliverables are required to document, in the form of a test report, the results of the testing:

- Raw test data
- A statistical function that correlates the emissivity of each material to temperature, time, and any other relevant parameter determined to be significant

Test 2: Effect of Particulates on Radiation Heat Transport

Test Objective

The objective of this test is to determine the effects of particulate, dust, and steam in the reactor cavity on radiation heat transfer. There are two main concerns with particulates:

- the particulates can scatter radiant energy and act as a participating medium, and
- the particulates may plate out on the cooler surface of the RCCS panels and thus reduce the emissivity of the panels

The testing must establish whether these concerns are justifiable and characterize the overall effect on the heat transfer from the RPV to the RCCS.

Test Conditions

A test assembly with a resistance-heated emitter and actively cooled absorber, built from materials with well-established emissivity properties, will be tested in an apparatus capable of controlling environmental conditions and introducing variable levels of particulates, dust, and steam. Ideally the selected materials should be representative of the RPV and RCCS materials, but this may not be strictly necessary. The temperature ranges for the emitter and absorber are as follows:

Table D-2: Test Conditions

Emitter Temperature Range [℃]	20 – 700
Absorber Temperature Range [℃]	20 – TBD

Baseline measurements will be taken with purified air in a controlled environment. Varying levels of particulates will be introduced to assess the impact on heat transfer. The types of particulates remain to be determined, but, at a minimum, they should include steam, concrete dust, and graphite dust (from a depressurization).

Longer-term testing to determine the effects of plating out on the RCCS panels must also be completed. The required test duration and level of particulates needed for making these assessments should be based upon the results of testing that varies the level of particulates.

Test Facility Requirements

An in-air test facility capable of providing the conditions above is needed. The test facility must be adequately instrumented to measure emissivity and total heat transfer. The following list identifies a sample of the test equipment that should be available to support the tests:

- Thermocouples
- Data acquisition and processing equipment

Other equipment may be needed as determined during the design process.

Proposed Test Location

It is recommended that tests be conducted by a facility with relevant expertise and capabilities such as the High Temperature Materials Laboratory at the Oak Ridge National Laboratory.

Test Duration

The test duration is estimated to be approximately 6 - 12 months. A schedule of all tests required to move from TRL 5 to TRL 6 is shown in Fig. D-2.

Measured Parameters

The following parameters need to be measured:

- Reduction in radiative heat transfer as a function of the amount of particulates
- Decrease in emissivity of RCCS panels as a function of the amount of particulates, time, and temperature of the RCCS panels

Data Requirements

All parameters must be measured and recorded at a level of accuracy to be determined in conceptual design. All data shall be collected in a manner consistent with NQA-1.

Deliverables

The following deliverables are required to document, in the form of a test report, the results of the testing:

- Raw test data
- A statistical function correlating the reduction in radiative heat transfer to the amount of particulates, time, and temperature of the RCCS panels

ID	Task Name
1	Reactor Cavity Cooling System (RCCS) (TRL 5-6)
2	Emissivity behavior of RPV and RCCS materials
3	Test item design
4	Test item procurement
5	Update of test plan
6	Test procedure development
7	Test facility identification and contracting
8	Test setup and installation
9	Test
10	Test item removal
11	Test item inspection
12	Data analysis
13	Reporting
14	Effect of particulates on radiation heat transport
15	Test item design
16	Test item procurement
17	Update of test plan
18	Test procedure development
19	Test facility identification and contracting
20	Test setup and installation
21	Test
22	Test item removal
23	Test item inspection
24	Data analysis
25	Reporting

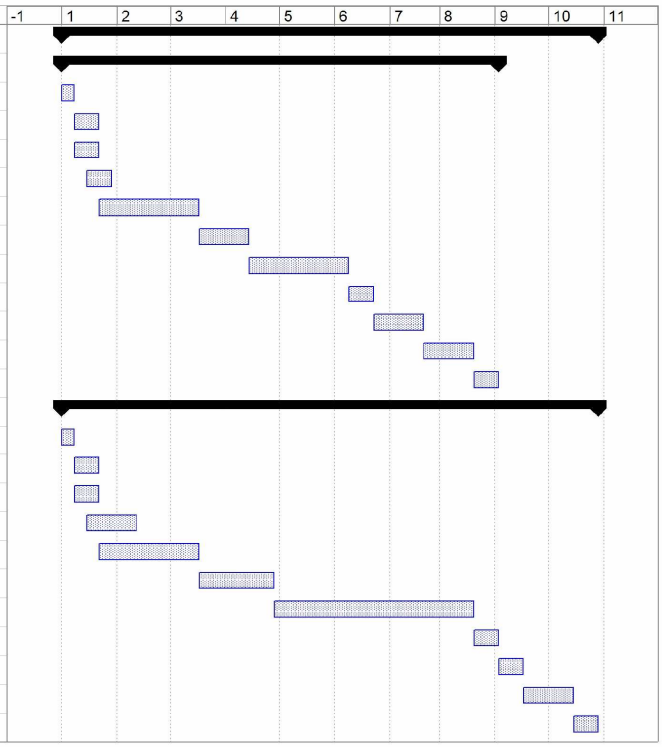

Fig. D-2: Test Schedule for RCCS for TRL from 5 to 6

D.2 Reactor Cavity Cooling System Test Plan (TRL 6 to 7)

NGNP Nuclear Heat Supply System

Test Plan for the Reactor Cavity Cooling System TRL 6 to 7

Introduction

The primary functions of the Reactor Cavity Cooling System (RCCS) are to protect the reactor cavity concrete, including Reactor Pressure Vessel (RPV) supports, from overheating during normal operation. The RCCS provides an alternate means of heat removal from the reactor system to the environment when neither the Main Heat Transport System nor the Shutdown Cooling System is available.

The RCCS, which receives heat transferred from the vessel, includes the cavity cooler panels. The cavity cooler panels form a closed tube wall that surrounds the RPV and functions as a compact air-to-water heat exchanger. The tubes are installed vertically and joined by welding to form a welded membrane panel wall. The RCCS is illustrated in Fig. D-3.

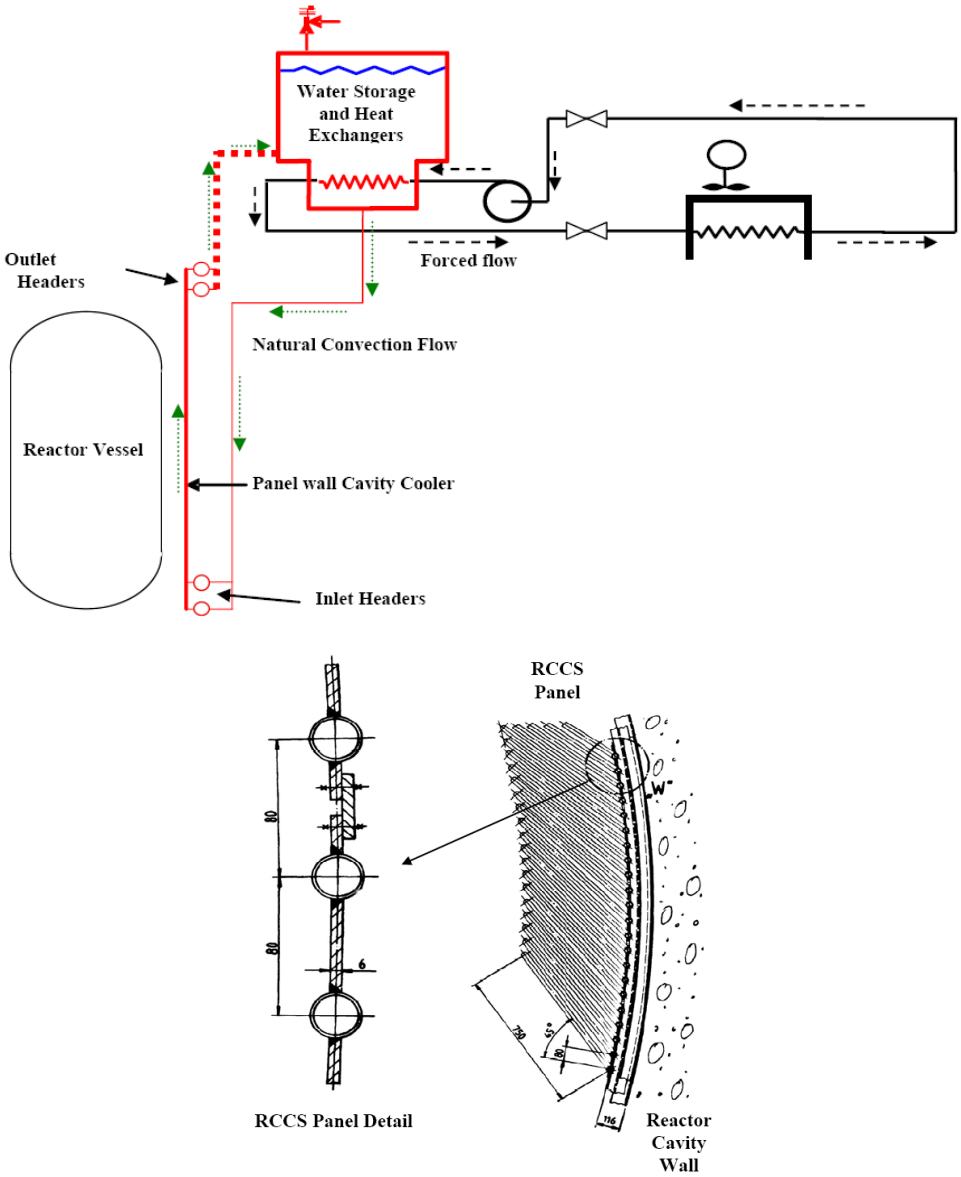

Fig. D-3: RCCS Layout

Technology Description and Readiness Level

Plant:	NGNP
Area:	Nuclear Heat Supply System
System:	Reactor System
Subsystem/Structure:	Reactor Cavity Cooling System
Component:	N/A

Technology Readiness Level

Current TRL:	6
Next TRL:	7

Required Tests to Achieve Next TRL

Four tests are required for the RCCS to achieve a TRL of 7:

Test 1. Reactor Cavity Heat Transfer Analysis

Test 2. RCCS Natural Circulation Analysis

Test 3. RCCS Thermomechanical Analysis

Test 4. Integrated Test

The first three tests require no physical testing. However, some testing may be needed to validate the analysis results, depending on the requirements of the NGNP program, NRC requirements, or the outcome of the future design analyses.

Test 1: Reactor Cavity Heat Transfer Analysis

Test Objective

The objective of this test is to characterize heat transport phenomena in the reactor cavity in order to define the coolant path for accident conditions and to assess their impact on normal operations. The following three main heat transport mechanisms need to be considered:

- Radiation across the annular gap between the RPV and the RCCS cavity cooler panels
- Natural convection within the reactor cavity
- To a lesser extent, conduction across the gap between the RPV and the RCCS cavity cooler panels

Analytical calculation methods, such as computational fluid dynamics and lumped-capacitance models, should be used to characterize the general heat transport phenomena and to perform sensitivity studies on key parameters.

Test Conditions

Proposed Test Location

This task should be performed by the design organization.

Test Duration

The analysis is estimated to need approximately eight months. A schedule of all tests required to move from TRL 6 to TRL 7 is shown in Fig. D-4.

Measured Parameters

The following parameters are to be calculated:

- Steady-state heat loss to the RCCS at normal operating conditions
- Steady-state temperatures of the RPV and RCCS cavity cooler panels at normal operating conditions
- Transient temperatures of the RPV and RCCS cavity cooler panels under accident conditions

Deliverables

The following deliverables will be required to document, in the form of a test report, the results of the analyses:

- Steady-state heat loss to RCCS under normal conditions
- Maximum steady-state temperatures of RPV and RCCS under normal conditions

- Maximum transient temperatures of RPV and RCCS under accident conditions
- Sensitivity studies for key parameters, such as, but not limited to, emissivity, geometry, and reactor cavity environment

Test 2: RCCS Natural Circulation Analysis

Test Objective

The objective of this test is to characterize natural circulation phenomena in the RCCS cavity cooler panels, coolant piping, and water storage tank.

Analytical calculation methods, such as computational fluid dynamics and lumped-capacitance models, should be used to characterize the natural circulation phenomena and to perform sensitivity studies on key parameters.

Test Conditions

Proposed Test Location

This task should be performed by the design organization.

Test Duration

The analysis is estimated to need approximately seven months. A schedule of all tests required to move from TRL 6 to TRL 7 is shown in Fig. D-4.

Measured Parameters

The following parameters are to be calculated:

- Critical Heat Flux (CHF) of the coolant tubes in the panel wall
- Natural circulation behavior of the RCCS system
- Heat removal capacity of the RCCS via natural circulation with and without active cooling of the water storage tank

Deliverables

The following deliverables are required to document, in the form of a test report, the results of the analysis:

- CHF correlation for panel wall
- Heat removal capacity of the RCCS for normal and accident conditions

Test 3: RCCS Thermomechanical Analysis

Test Objective

The objective of this test is to characterize the thermomechanical behavior of the RCCS cavity cooler panels.

Analytical calculation methods, such as finite element analysis, should be used to characterize the thermomechanical behavior of the cavity cooler panels and to perform sensitivity studies on key parameters.

Test Conditions

Proposed Test Location

This task should be performed by the design organization.

Test Duration

The analysis is estimated to need approximately five months. A schedule of all tests required to move from TRL 6 to TRL 7 is shown in Fig. D-4.

Measured Parameters

The following parameters are to be calculated:

- Stresses induced by thermal expansion, seismic conditions, or any other applicable source
- Failure mechanisms of tubes in cavity cooler panels

Deliverables

The following deliverables will be required to document, in the form of a test report, the results of the analysis:

- Total stress limits for the RCCS cavity cooler panels
- Design criteria to prevent failure (cracking, sheering, etc.) of tubes in cooler panels

Test 4: Integrated Testing

Test Objective

The objective of this test is to validate the overall integrated performance of the RCCS at an engineering scale. While the general phenomena involved in the heat removal path can be calculated analytically piecewise, it is necessary to confirm that the entire system as a whole performs in an acceptable manner.

Test Conditions

The testing must incorporate the RCCS design and materials and test over the following range of steady-state and transient conditions that bound temperatures expected in each of the components:

Table D-3: Test Conditions

RPV Temperature [℃]	20 – 550
RCCS Temperature [℃]	20 – TBD

Long-term testing at conditions representative of NGNP normal operating conditions, plus some short-duration tests at conditions representative of accident conditions, will be performed. The necessary length of these tests must be defined during conceptual design work. Additionally, testing should be conducted with the water storage tank cooling out-of-service to determine a time to dry out, which may limit the amount of time without operator interaction.

Proposed Test Location

It is recommended that this test be conducted at the Natural Convection Shutdown Heat Removal Test Facility at Argonne National Laboratory.

Test Duration

The test duration is estimated to be approximately 11 months. A schedule of all tests required to move from TRL 6 to TRL 7 is shown in Fig. D-4.

Measured Parameters

The following parameters are necessary to measure:

- Surface temperature of the RPV
- Surface temperature of the RCCS
- Temperatures in the panel tubes, coolant piping, water storage tank, etc.

This list may expand if more data are found to be needed during detailed design activities.

Data Requirements

All parameters must be measured and recorded to a level of accuracy to be determined in conceptual design. All data must be collected in a manner consistent with NQA-1.

Deliverables

The following deliverables will be required to document, in the form of a test report, the results of the testing:

- Raw test data
- Overall assessment of RCCS capability
- Heat removal capacity of system in accident conditions
- Maximum RPV and RCCS temperatures during steady-state and transient conditions

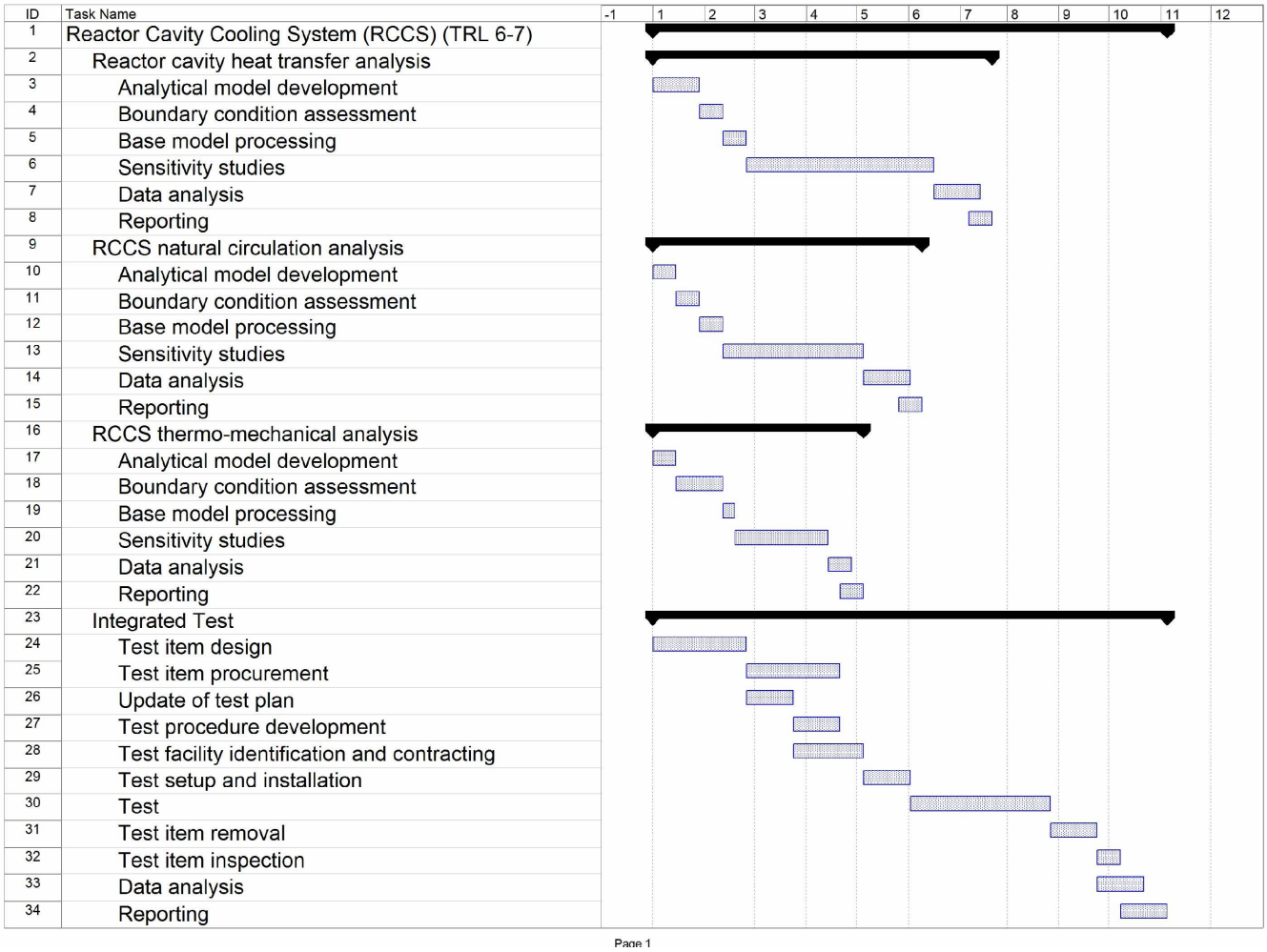

Fig. D-4: Test Schedule for RCCS for TRL from 6 to 7

APPENDIX E: MAIN HELIUM CIRCULATOR TEST PLANS

E.1 Main Helium Circulator Test Plan (TRL 6 to 7)

NGNP Heat Transport System

Test Plan for the Main Helium Circulator TRL 6 to 7

Introduction

The Main Helium Circulator pumps helium through the Reactor Core and through the Main Heat Transport System. The reference gas circulator concept for the NGNP reactor is an encapsulated centrifugal impeller, vertically mounted on the 4 MW_e motor shaft. The size of the unit is based on:

- Engineering studies that considered the tradeoff between construction costs of the unit and the coolant pressure drop through the reactor using a two-loop configuration
- Scaling up of previous 4 MW_e circulator designs

Previous work [8] found the 4 MW_e circulator is feasible with existing design methods and available technology. However, additional engineering testing is required to confirm the design solution and the performance of the unit as a whole and especially the performance of the rotor, which is the critical component within the circulator.

All of the components within the design envelope now being considered for NGNP are within current technology limits, but their designs are complex and interdependent. For example, the design and selection of the magnetic bearings are dependent on the rotordynamics, which is a critical area that requires considerable data and has design details that will evolve as the design is developed. Vendors typically test the rotordynamics (impeller, shaft, motor, and bearings) to ensure there is acceptable margin between the running speed and the natural frequency to avoid unacceptable dynamic amplification and vibration. These tests and any required changes (including tuning the bearings or rotor design modifications) will demonstrate the design and qualify it to operate under load.

Standard vendor tests will be performed to confirm the aerodynamic and acoustic design analysis. These tests will be used to optimize the design of the acoustic treatments used to reduce noise-induced harmonics and fatigue damage. It is expected the circulator design changes, which will be based on the results of low temperature and pressure tests, will optimize performance. Other design changes that may occur include the following: using acoustic treatments to reduce noise breakout power levels, tuning bearing controls to reduce resonance near the critical rotor speed, and adding an impeller guard. The test plan includes tests of the design modifications based on the low temperature tests and also tests of the circulator connected to the circulator shutoff valve. The latter test will demonstrate that the circulator does not choke or stall when started up with the shutoff valve closed. The valve is designed to prevent reverse flow.

The tests described in this plan are considered adequate to demonstrate the design and operation of the Main Helium Circulator at the elevated temperatures and pressures of the NGNP. Previous vendor tests have demonstrated that electrical discharge is most likely to occur at low pressures. Electrical discharge degrades the electrical insulation and degraded electrical insulation leads to electrical discharge at normal operating conditions. Testing of the bearing and motor conductors and insulation in helium and at representative voltages is recommended.

Dynamic testing of the circulator in helium is not required before it is installed in the NGNP given that helium circulator technology, for the unit sizes and operational environment envisioned for the NGNP, is a fairly robust technology. Interactions with potential helium circulator suppliers in support of AREVA's internal HTGR program have reinforced this position, as has past gas reactor performance history, which indicates no significant impacts from dust or static buildup.

The recommended full scale air testing is solely intended as fabrication verification for the NGNP-specific unit. It is not expected to verify the myriad of design considerations that are part of the normal development of a new circulator type. This type of testing is typically conducted by the circulator vendors for each new unit delivered.

Full scale tests in helium will be conducted during qualification of the completed NGNP systems. The schedule risk differential between conducting the final helium test at the factory or other helium loop versus in the NGNP is minimal. Since it is expected that the circulator test would be conducted as part of system commissioning shortly after delivery and installation, the final test will occur only a few months after it could have been tested otherwise. There is no safety issue associated with conducting this test in the NGNP.

The following items are important for helium service but can be tested in air. The properties of air and helium are well understood; both behave as near ideal gases at NGNP service conditions:

- Aerodynamics – tested in air by using similarity laws
- Motor Load – control of the air density can be adequately simulated by control of the temperature and pressure
- Motor cooling – solved via analysis
- Acoustics – The shift in blower sound power levels and casing breakout frequencies from air to helium can be determined via analysis. Helium has a sound velocity more than four times that of air. The frequency and strength of vortex shedding and broadband noise generation is proportional to the gas density. The sound power is inversely proportional to the cube of the velocity of sound.
- Bearings – Tribology effects on the magnetic bearings and catcher bearings are not considered critical. In-service inspection of the NGNP circulator bearings can be used to determine maintenance requirements.

AREVA assumes that long-term corrosion effects from the NGNP helium chemistry will be evaluated as part of the ongoing materials test program and during NGNP operation. The circulator instrumentation and control are standard technology.

The circulator illustrated Fig. E-1 is taken from the MHTGR. The depicted circulator design is considered to be comparable to the NGNP design.

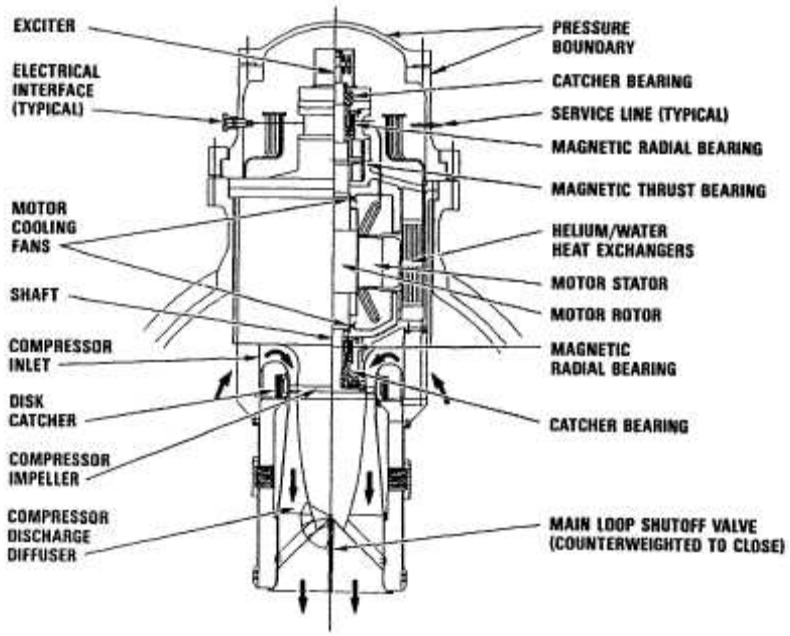

Fig. E-1: Circulator Layout (MHTGR)

For illustration only. The configuration shown is for an axial downflow circulator. The AREVA conceptual design includes an upflow centrifugal compressor (similar to the New Production Reactor)

Technology Description and Readiness Level

Plant:	NGNP
Area:	Heat Transport System
System:	Main Heat Transport System
Subsystem/Structure:	N/A
Component:	Main Helium Circulator

Technology Readiness Level

Current TRL:	6
Next TRL:	7

Required Tests to Achieve Next TRL

The following four tests are required to validate the circulator design and operation in the Main Heat Transport System:

- Vendor bench tests of bearing and rotordynamics
- Vendor tests of electrical conductors, connection, insulation, and penetrations in helium
- Vendor performance tests in air at ambient conditions
- A single integrated test of the gas circulator assembled with the circulator shutoff valve in high temperature and pressurized air. The circulator must start at low pressure and temperature without stalling under the load of the shutoff valve and operate efficiently over a wide range of flow conditions. The performance of the components near the limit of their design envelope must be confirmed.

Test 1: Demonstration of the magnetic bearings with the rotating equipment assembly

Test Objective

The objective of this test is to demonstrate the performance of the magnetic bearings as part of the integrated rotating equipment assembly (motor, bearings, rotor, and impeller) over the full range of operating conditions. The accuracy of the calculated natural frequencies and critical speed of the impeller will be determined. The adequacy of design margins will be evaluated. The test results will be used to revise the bearing and rotor design, if resonant vibration occurs. A second objective is to demonstrate that state of the art inverters and input power transformer rectifiers can operate at the frequencies required to control the motor without having an adverse impact on the supply current.

Test Conditions

An integrated rotating equipment assembly is required for this test. The test location must have a test rig capable of supporting the assembly for testing in air. The test will cover a range of 0 to 110% of the circulator motor's design speed at ambient temperature and pressure.

Setup Requirements

A test rig with electrical power and instrumentation for measuring motor speed, voltage, current, and shaft vibration is required. Additional instrumentation will be included to measure secondary items, such as thrust on the load bearings, motor temperature, torque characteristics, acoustics and coast-down tests. Nondestructive examination equipment will be required to examine the rotor and to assess the performance and wear on the bearings following completion of testing.

Proposed Test Location

This testing should be performed at a test facility identified by the circulator vendor. Other facilities could be used, such as the facility at Zittau, Germany.

Test Duration

The test duration is estimated at one to three months, including set-up, testing, and preparing the deliverables.

Measured Parameters

The following parameters are required to be measured before, during, and after testing:

Table E-1: Measured Parameters

Parameter	Range	Units
Torque settings of all mechanical nuts and bolts	TBD	N m
Motor speed	TBD	RPM
Motor temperature	TBD	℃
Motor torque	TBD	N m
Motor temperature under all loads	TBD	℃
Thrust on bearings during all loads	TBD	N
Lateral movement of the impellor shaft during load conditions.	TBD	mm
Electrical current and frequency	TBD	Amps & Hz
Voltage drawn under all loads	TBD	Volts
Shaft vibration amplitude	TBD	mm
Shaft vibration frequency - Critical speed - Frequency response curve	TBD	 - RPM - Amplitude vs. Hz
Coast down characteristics of unit - Vibration - Time	TBD	 - n/a - Min.
Check torque setting of all mechanical nuts and bolts following testing	TBD	N m
Visual determination of stability of impeller	TBD	n/a
Post test examination of all major components	TBD	n/a
Post test inspection of all bearings	TBD	n/a

Data Requirements

The required accuracy of data will be established during NGNP conceptual design. The data from this test will be used to generate circulator performance curves (pressure differential vs. mass flow rate, input power vs. mass flow rate, etc.) to enable final predictions of NGNP primary side aerodynamics prior to final preoperational plant testing. All data will be collected in a manner consistent with NQA-1.

Deliverables

The following deliverables will be required to document the results of the testing:

- Vendor design drawings, specifications, and design report for the rotating assembly
- Test data
- Test report documenting the results of the testing, any as-built modifications, and lessons learned from the testing

Test 2: Electrical conductors, connections, insulation and penetrations in helium

Test Objective

The objective of this test is to validate the performance of candidate electrical high voltage motor windings, bearing power conductors and insulation in helium at the most severe combinations of pressure, temperature, and depressurization.

Test Conditions

High voltage electrical motor and bearing mockups should be tested in a configuration having characteristics (clearance between conductors, metal connections, penetrations, and gas dielectric properties) similar to those of the circulator. These conditions will be accomplished in a mockup assembly having the same configuration, critical dimensions, and materials of construction as the configuration to be used in the circulator. The test will be performed at the motor housing design temperature (approximately 150℃, the limit for Cla ss F Cable) and at pressures representative of both startup (0.1 MPa) and normal operating conditions (6.0 MPa).

Setup Requirements

The test will be conducted in a helium test chamber with pressure and temperature controls. A high voltage electric power supply (same voltage as the 4 MW_e circulator power supply) is required.

Proposed Test Location

It is recommended that the tests be conducted at a specialized vendor or national laboratory equipped with the necessary equipment and safety procedures. An appropriate test bench with helium environment exists at FLP 500 in Dresden, Germany, where magnetic bearing tests are performed as part of the European program.

Test Duration

Test duration is estimated at six months, including the setup, testing, and preparing deliverables.

Measured Parameters

Conductors and penetrations should neither crack nor experience electrical discharge at the most severe combinations of pressure, temperature, and depressurization.

The following parameters are required to be measured before, during, and after testing:

- Current (Amps)
- Voltage (Volts)
- Dimensions (mm)

- Visual Inspection
- Aging and embrittlement of the insulation following testing at operating temperature

Data Requirements

The required accuracy of data will be established during NGNP conceptual design. All data shall be collected in a manner consistent with NQA-1.

Deliverables

The following deliverables are required to document the results of the testing:

- Detailed design of the electrical penetrations
- Test Report documenting the results of the testing, any as-built modifications, and lessons learned from the testing

Test 3: Demonstration of circulator (housing, impeller, diffuser, electric motor, bearings, rotor, and inverter) performance in air

Test Objective

The objective of this test is to demonstrate the behavior of the assembled circulator by examining and characterizing the following key aspects of the unit while it is running in air at ambient temperature and pressure:

- Satisfactory operation of the complete unit over the complete speed range
- Fluid dynamics and harmonics of the impeller and benchmarking of the aerodynamic model
- Establish the efficiency of the impeller and diffuser
- In-duct and housing frequency responses and noise breakout power levels from the housing will be measured to determine if the acoustic dampening is sufficient to avoid harmonic coupling, which risks fatigue damage
- Acoustic treatment such as lagging, silencers or acoustic enclosures will be developed and tested, if required
- Extended steady state operation to determine stability of the design over time
- Determination of leakage from the circulator housing
- Nondestructive examination of component parts following testing

Circulator performance curves (power and flow for ambient air at full speed) will be generated during this test to confirm the design and operation of the circulator. The operational performance of the circulator should be better characterized following this test. Additionally, the aerodynamic and mechanical design of the circulator should be validated against the operational requirements of NGNP.

Leakage rates of the helium from the unit will be measured during static testing of the circulator. The final test will be nondestructive examination, during the dismantling of the system, to monitor clearances and individual measurements of changes in the physical dimensions of the component parts.

Test Conditions

The following two tests will be conducted on the fully assembled unit: a dynamic load test to measure various variables and a static pressure test to monitor leak rates. These tests of the fully assembled NGNP circulator design will be conducted at full scale. The test conditions will be at ambient temperature and pressure for the dynamic test and in helium at 6 MPa for the static test. The dynamic tests will verify operation over the operational range of the motor speed from 0 to 110%. The outlet from the circulator must be loaded to simulate the flow resistance that will be encountered in the NGNP reactor. The circulator will be suitably instrumented to allow the collection of all required data. The static test will monitor leakage of helium from the unit.

Setup Requirements

A test rig with electrical power and instrumentation for measuring motor speed, voltage, current, and shaft vibration is required. Additional instrumentation will be included to measure secondary items such as thrust on the load bearings, motor temperature, torque characteristics, acoustics, and coast-

down tests. Nondestructive examination of the rotor is required to assess the performance and wear on the bearings following testing.

The test rig must be capable of running continuously for an extended time to simulate reactor operations at normal reactor loads. The test will demonstrate the stability of the component operation with time.

The circulator outlet flow in the test rig must simulate the backpressure of the NGNP primary loop. The test must be designed to represent all aspects of the circulator including bearing and motor power connections, instrumentation leads, and cooling water. The test will be conducted in air at ambient conditions.

The capability to measure in-duct sound power levels and casing breakout sound power levels is required. The capability to test the catcher bearings is also required.

The circulator test unit should be disconnected from the flow test equipment following dynamic testing and then reconfigured to allow static testing at the operating pressure with helium over a 24-hour period to measure the loss of static pressure. A pressurized helium supply and test header with pressure recording gauges will be needed for conducting leak tests of the circulator housing, including penetrations and connections to the SG mockup.

Nondestructive examination of the critical circulator components will be required following the static test as the unit is disassembled.

Proposed Test Location

It is envisioned that testing will be conducted at the circulator manufacturer's test facility so adjustments (e.g., adding sound baffles, using a different diffuser or impeller) can be made during the testing of the unit. However, it is possible to conduct the tests at another test facility.

Test Duration

The duration of these tests is approximately two to three months, including setup, testing and preparing deliverables. This test is to be completed before integrated tests simulating the Main Heat Transport System are started.

Measured Parameters

The following parameters are required to be measured before, during, and after testing:

Table E-2: Measured Parameters

Parameter	Range	Units
Gas Conditions - mass flow rate - pressure (inlet and outlet) - gas temperature (inlet and outlet)	 - 0-141 - 0.1 – 0.2 - 25 – 100	 - Kg/s - MPa - ℃
Pretest clearances of component parts of circulator	TBD	mm
In-duct and exterior sound - power levels - frequencies	TBD	 - W - Hz
Vibration – Frequency – Amplitude	TBD	 - Hz - mm
Circulator cooler water – flow rate – temperatures	TBD	 - dm^3/s - ℃
Coast down performance	TBD	n/a
Leak rate (gas and water)	TBD	dm^3/s
Rotational speed	TBD	RPM
Axial thrust	TBD	N
Axial displacement	TBD	mm
Dimensions	TBD	mm
Visual	TBD	n/a
Weld penetration and radiological tests	TBD	Visible contrast at 1,000 micro-watts per centimeter squared
Current	TBD	Amps
Voltage	TBD	Volts
Motor speed	TBD	RPM
Motor temperature	TBD	℃
nondestructive examination of critical circulator parts	TBD	n/a
Internal clearance measurements of component parts following testing	TBD	mm
Leakage rate on sealed unit	TBD	% per day

Data Requirements

The required accuracy of data will be established during NGNP conceptual design. All data will be collected in a manner consistent with NQA-1.

Deliverables

The following deliverables are required to document the results of the testing:

- Test data, material specifications, and design package
- Circulator performance curves (e.g., ΔP vs. mass flow rate, power input vs. impeller speed
- Test Report

Test 4: Integrated Test of Gas Circulator with Shutoff Valve

Test Objective

The objective of this test is to demonstrate integrated operation of the circulator assembly (housing and cooling system, impeller and barrier plate, electric motor and power supply, bearings, rotor, power supply, and housing) with the shutoff valve under startup (100ºC and 0.1 MPa), normal (320℃ and 6.0 MPa), and transient conditions. The test will demonstrate that the circulator starts without stalling under the load imposed by the shutoff valve. The test will also characterize the impeller and diffuser aerodynamic performance as well as the blower acoustic frequency response of the circulator and shutoff valve in air over the range of operating conditions. The test will confirm the circulator component's performance and design over the range of operating conditions. Similarity laws will be used to predict the performance of the circulator in helium based on the test results.

This test is required to achieve TRL 7. AREVA recommends that this test be performed during reactor commissioning.

Test Conditions

This final test will be used to qualify the full-scale main helium circulator for the NGNP and the performance of the components used in its design. It is assumed that the circulator used in previous testing will be available for this test and that all results pertaining to the physical measurement of clearances and components will be available and do not need to be repeated to obtain reference information.

Testing will be conducted in air at temperatures, pressures, and mass flow rates equivalent to those present in the NGNP reactor. Normal operating conditions are defined as a helium flow rate of 141 kg/sec, a temperature of 320℃, and a pressure of 6 MPa against a 66 KPa pressure head.

The tests should be conducted over a flow range of 30% to 100%. Testing will include transient maneuvers (startup, shutdown, and accident scenarios) to verify performance under those conditions. Startup conditions are 100℃ and 0.1 MPa. Load-fol lowing transient and safety design basis conditions will be established during NGNP conceptual design.

Casing acoustic noise breakout sound levels and rotor vibration frequencies will be measured and compared to predicted values at any given impeller speed over the operating range.

The circulator cooling system will be operated to demonstrate that the motor and bearings are maintained within their design temperature limits.

The leak rate from the circulator will be measured at the end of the test to ensure the integrity of the boundary has been maintained. Leak testing will be conducted during the course of the testing where practical to determine the integrity of all seals.

Visual, physical and nondestructive examination of all critical components and clearances will be conducted prior to and at the completion of the trials.

Setup Requirements

The setup requires an air heater and piping designed to deliver air at 325℃ and 6 MPa to the circulator and valves to control flow rates and create a 66 KPa pressure drop. During the test, the nominal full-flow air flow rate will be equivalent to 141 kg/sec helium and be measured in incremental changes. The air heater for this test is required to produce the nominal reactor temperature heating rate.

The circulator inlet piping connection will accommodate the shutoff valve for integrated testing with the circulator. Provisions are required for testing the backflow through the shutoff valve.

The test loop will be fully instrumented with strain gauges, vibration and noise monitoring, thermocouples, pressure transducers and volumetric flow measurement at all relevant points in the circulator and the test loop.

Motor control load (current, voltage) and inverter frequency data recording instrumentation will be installed in the test setup.

The capability to measure in-duct sound power levels and casing breakout sound power levels is required.

A pressurized helium supply and test header with recording pressure gauges will be required for post-test leak tests of the circulator housing. Following the dynamic testing of the circulator, the unit should be disconnected from the rest of the process equipment and reconfigured to allow a static test with helium at operating pressure to be conducted over a 24 hour period to measure the loss of static pressure.

Nondestructive examination of critical circulator components will be required as the unit is disassembled following the static test.

Proposed Test Location

It is recommended that this test be performed during NGNP commissioning. Alternatively, the testing could be performed at the CTF or at a vendor test facility.

Test Duration

The duration of testing is estimated at 6 -12 months, including setup, testing, and preparing deliverables. The testing is expected to be completed prior to shipping the circulator to the NGNP site.

Measured Parameters

The following parameters are required to be measured before, during, and after testing:

Table E-3: Measured Parameters

Parameters	Range	Units
Torque settings of all mechanical nuts and bolts	TBD	N m
Motor speed	TBD	RPM
Motor temperature	TBD	℃
Motor torque	TBD	N m
Motor temperature under all loads	TBD	℃
Thrust on bearings during all loads	TBD	N
Lateral movement of the impeller shaft during load conditions.	TBD	mm
Electrical power - Current - Frequency	TBD	 - Amps - Hz
Voltage drawn under all loads	TBD	Volts
Shaft vibration amplitude	TBD	mm
Shaft vibration frequency	TBD	Hz
Coast down characteristics of unit - Vibration - Time	TBD	 - n/a - Min.
Check torque setting of all mechanical nuts and bolts following testing	TBD	N m
Visual determination of stability of impeller	TBD	n/a
Gas Conditions – mass flow rate – pressure (outlet) – pressure rise – gas temperature (inlet and outlet)	 - 0-141 - 6.0 - 66 - 320 - 325	 – Kg/s – MPa – KPa – ℃
Motor electrical power – Current – Voltage	TBD	 – Amps – Volts
Motor inverter frequency	TBD	Hz
Circulator cooler water - flow rate - temperatures	TBD	 – dm^3/s – ℃
Post test leak rates	TBD	%/day
Post test examination of all major components	TBD	n/a
Post test inspection of all bearings	TBD	n/a

Data Requirements

The required accuracy of data will be established during NGNP conceptual design. The data from this test will be used to generate circulator performance curves (pressure differential vs. mass flow rate, input power vs. mass flow rate, etc.) to enable final predictions of NGNP primary side aerodynamics prior to final preoperational plant testing. All data will be collected in a manner consistent with NQA-1.

Deliverables

The following deliverables are required to document the results of the testing:

- Data characterizing the performance of the gas circulator (impeller and diffuser aerodynamics, cooling system effectiveness, and motor efficiency, rotordynamics, effect of inverter on incoming power supply)
- Circulator performance curves for air and helium
- Design package and specifications, including: 1) impeller design loads during normal and transient events, 2) motor design loads during normal and transient events and, 3) rotordynamics
- Test report comparing test results with design requirements and assumptions

ID	Task Name
1	Primary He Circulator (TRL 6-7)
2	Hot Circulator Test
3	Assemble Circulator
4	Measure all clearances before test
5	Functional Test of Circulator
6	Adjustments
7	Long Run of Circulator
8	Preparation for Static Test
9	Static Presure Test
10	Inspection of all post test clearances
11	NDE Inspection of Impellor
12	Modify Design if Required
13	Report

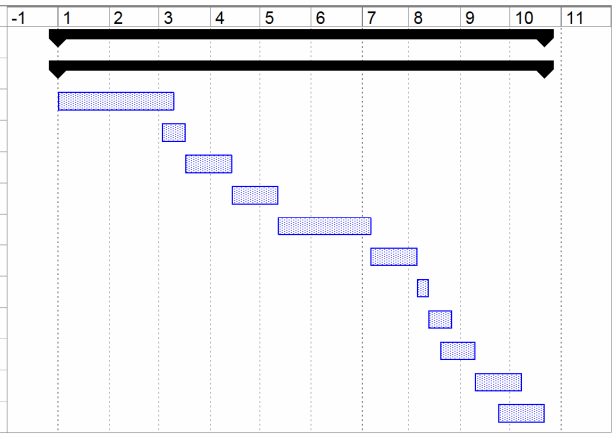

Fig. E-2: Test Schedule for Main Helium Circulator for TRL from 6 to 7

APPENDIX F: CIRCULATOR SHUTOFF VALVE TEST PLANS

F.1 Shutoff Valve Test Plan (TRL 6 to 7)

NGNP Heat Transport System

Test Plan for Circulator Shutoff Valve TRL 6 to 7

Circulator shutoff valves are located at the inlet to the circulators in the Main Heat Transport System (HTS). These valves are required to remain open during plant operation and close during plant shutdown to prevent excessive backflow of coolant through the circulator(s). The valves are designed to operate passively using a counterweight to close the valve when flow stops and aerodynamic forces to open the valve when there is flow. The NGNP Circulator Shutoff Valve is located at the circulator inlet. The FSV Circulator Shutoff Valve was at the outlet.

Based on previous operating experience with similar valves, the primary design issues are:

- Reliable cyclic operation of the valve at high temperature (failures and stiffening). The critical test is that the valve opens when the circulator starts up. Long term cyclic testing is not required due to the low number of cycles over valve lifetime (~1000) and the assumption that in-service inspection will be performed during planned shutdowns.
- Reliability of the valve actuation mechanism to close or open the valve. The conceptual design relies on aerodynamics and gravity. Mechanical actuators are more complicated.
- Effect of the valve operation on the circulator operation and performance.
- The tests in this plan are expected to confirm valve design, operating characteristics, and operation at the design operating conditions expected in the NGNP during reactor startup, normal operation, and reactor shutdown. The performance of the valve will be characterized by measuring its performance in air at both ambient temperature and at normal operating temperatures. These measurements will provide data on the resistance to the gas flow through the valve as a function of the position of the valve. The deposition of carbon transported in the circulating helium from the Reactor Core onto the bearings is not considered significant enough to lead to operational problems since the gas will contact colder surfaces and complex flow geometries in the SG before flowing through this valve.

Technology Description and Readiness Level

Plant:	NGNP
Area:	Heat Transport System
System:	Main Heat Transport System
Subsystem/Structure:	N/A
Component:	Circulator Shutoff Valve

Technology Readiness Level

Current TRL:	6
Next TRL:	7

Required Tests to Achieve Next TRL

To reach a TRL of 7, a test will first need to be performed to test the operation of the valve in air at standard temperature and pressure (STP). This test will be followed by a demonstration of the valve operating under simulated plant conditions. These integrated tasks will cover reactor startup conditions, steady-state conditions, and reactor shutdown. They should ideally be conducted while the valve is connected to the circulator to ensure no interference of the circulator operation occurs during valve operation. All proposed testing is manufacturer's testing normally performed by circulator vendors. No special facilities or other special items are needed.

The tests in air will validate the performance of the valve in air prior to high temperature testing in conjunction with the circulator. These tests are designed to validate the operation of the valve and record its operating characteristics. The tests will be conducted on a simple test rig that will be constructed to support this work and will include the following:

- Functional testing of the valve at ambient conditions and recording the time taken by the valve to open and close
- Testing of the pressure drop across the shutoff valve as a function of the valve position relative to the gas flow rate
- Testing of the cyclic operation of the valve at ambient conditions to demonstrate repeated operation without failure of the valve

Follow-on testing will demonstrate and validate the performance of the shutoff valve to fully open and close when the gas circulator is turned on and off without stalling the circulator or impacting the gas flow distribution through the impeller and diffuser while operating under simulated plant conditions, startup, normal operation, and shutdown. The tests will be conducted using air as the test medium.

If the final design requires optimization based on test results, additional testing will be required to finalize the valve configuration. Such optimizations may include actuator assist or modified flap and housing shapes.

Tests of the final configuration of this valve in the NGNP test reactor are required to demonstrate reliable performance during exposure to circulating helium coolant from the operating reactor over a prolonged time. This test should include physical and visual examination of the valve bearings and sealing surfaces. In-service inspection methods will be demonstrated as part of those tests.

Test Conditions

There is a shutoff valve on each of the main heat transfer loops of the NGNP reactor.

Both the circulator and valve assembly will be prototypical in capacity, materials, dimensions, and functions and will have passed acceptance testing prior to start of performance testing. It is noted that the shutoff valve may be tested with an actuator assist if required to achieve a full open and closed position. A decision on the actuator will come in the conceptual design and, if one is used, it will be validated through testing.

Functional tests will demonstrate the performance of the valve over the full range of expected process flow conditions (0 to 100% of normal mass flow rates and pressures) during startup, normal operation, shutdown, and transients.

Normal operating conditions of the circulator shut off valve are as follows.

Table F-1: Normal Operating Conditions

Temperature	320℃
Pressure	6 MPa
Mass Flow	141 kg/sec He

Startup conditions are as follows.

Table F-2: Startup Conditions

Temperature	100℃
Pressure	0.1 MPa
Mass Flow	0.0 kg/sec He

The valve must fully open in forward flow with minimal obstruction to flow. The valve resistance must be less than the circulator pressure rise and not cause the circulator to stall at startup conditions. The valve must close when the circulator is shut down and remain closed under reverse flow conditions. The pressure drop across the valve will be recorded over the full range of expected flow conditions (0 to 100%).

Valve degradation will be measured via post test visual examination for deformation (of the valve seats) and alignment (of the valve, valve seat, and housing) and during in situ monitoring of the housing leak rate. There is no criterion for leakage through the closed valve seat. Post-test leakage from the housing should be minimal (e.g., <1% over 24 hours). The valve seating surfaces on the valve seat and the valve will be subjected to nondestructive examination by using either penetrating dye or penetrating fluorescent examination. Also, if the valve has a bolted connection, the gasket joint surface will be subjected to nondestructive examination.

Valve degradation will be measured every 50 cycles until the valve fails to meet its functional requirements. The valve may be tested longer to measure its degraded performance. The design baseline document specifies 660 startups, 300 of which are from normal shutdowns and 360 are from reactor trips. Over the life of the NGNP, 120 circulator trips are expected.

Setup Requirements

The setup requirements are as follows:

- An air test loop, including gas supply (air mass flow equal to 141 Kg/s of helium at 320℃ and 6 MPa), the 4 MW_e circulator, heaters, piping, pressure gages, thermocouples, gas flow

instrumentation, controllers and data recorders. The test loop will include an auxiliary blower and header to simulate reverse flow conditions when the circulator is not operating.

- Dimensional and torque measuring instruments to measure the pre- and post-test torque required to open and close the circulator shutoff valve and the valve position (degrees) when it is open and closed.
- Nondestructive examination capability (may be penetrating dye or penetrating fluorescent).
- Pressure gauges and transducers and data recorders.

Proposed Test Location

The initial testing of the valve, including functional testing, cyclic operation and pressure drop measurements should be conducted at the valve vendor's facility as part of post-fabrication acceptance testing. It is recommended that the integrated test be performed at the circulator vendor's test facility and included in the contract for circulator fabrication.

Test Duration

The integrated component tests of the circulator shutoff valve assembly (with and without actuator assist) with the gas circulator should be completed during NGNP conceptual design. The duration of the test of the circulator shutoff valve is estimated to be 12 months. A schedule of all tests required to move from TRL 6 to TRL 7 is shown in Figure F-1 at the end of this test plan.

Measured Parameters

The following parameters are required to be measured:

- Critical valve dimensions before and after test (mm)
- Depressurization and pressurization rates when the circulator is turned on and shut down (MPa/sec)
- Reverse flow rates when the circulator is not operating (m^3/s)
- Pressure and pressure drop across valve during testing (open, shut, and incremental positions) (MPa)
- Closing and opening cycle time (sec)
- Number of cycles
- Valve position (degrees azimuth when open and closed)
- Deformation in all directions (cm)
- Post test valve seat nondestructive examination
- Bearing torque (open and close) (Nm)
- Performance of the circulator during startup, normal operation, and shutdown

Data Requirements

The required accuracy of the data and performance requirements will support plant design and operations and be established during the NGNP conceptual design phase. All data shall be collected in a manner consistent with NQA-1.

Deliverables

The following deliverables are required to document the results of the testing:

- Raw test data recorded in a dedicated log book
- Pictures and video recordings
- Copies of certificates of calibration for instrumentation
- Test report including analysis of valve performance
- Recommendations for design optimization
- Post-optimization confirmatory testing (if required)

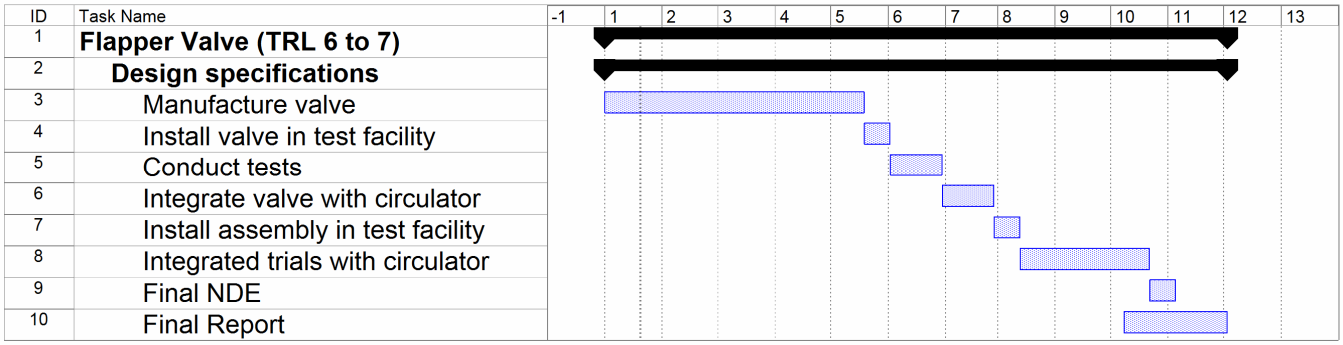

Fig. F-1: Test Schedule for the Circulator Shutoff Valve for TRL from 6 to 7

APPENDIX G: HOT DUCT TEST PLANS

G.1 Hot Duct (TRL 5 to 6)

NGNP Heat Transport System

Test Plan for Hot Duct TRL 5 to 6

Introduction

The Hot Duct (HD) is located internal and coaxial to the Cross Vessel between the Reactor Pressure Vessel and the Steam Generator Vessel. The HD is a multi-layered, insulated assembly that allows for the separation of hot and cold primary coolant within a single vessel. Hot helium coolant (nominally at 750℃ with hot streaks up to 900℃) f rom the core travels internal to the HD while cooler helium at 325℃ returns to the core in the annulus between the outside of the HD and the inside of the Cross Vessel. A cross section of the HD is illustrated in Fig. G-1.

The test plan proposes the following two tests to cover key areas:

- Develop and qualify manufacturing processes
- Perform an analytical performance assessment of the HD

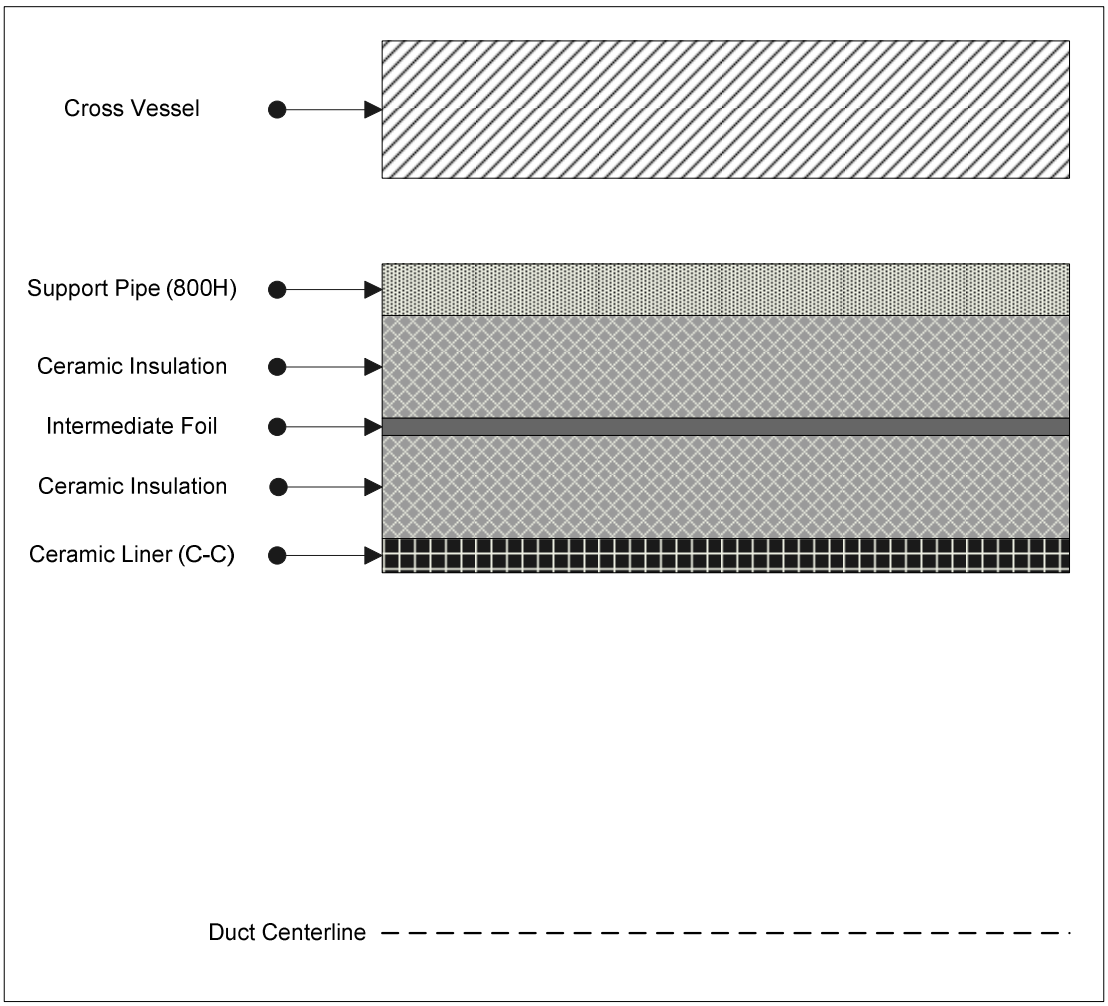

Fig. G-1: Hot Duct Layout

Technology Description and Readiness Level

Plant:	NGNP
Area:	Heat Transport System
System:	Main Heat Transport System
Subsystem/Structure:	N/A
Component:	Hot Duct

Technology Readiness Level

Current TRL:	5
Next TRL:	6

Required Tests to Achieve Next TRL

The following two tests are required for the HD to advance to a TRL of 6:

Test 1. Component Manufacturing Development

Test 2. Analytical Performance Assessment

Test 1: Component Manufacturing Development

Test Objective

The test objective is a manufacturing development effort to qualify the manufacturing processes for the composite ceramic liner and the assembly of the HD.

Background Information

The HD design proposed for the NGNP is based on a design manufactured and tested in Germany in the late 1980s. The HD for the NGNP may differ in subtle ways and may be somewhat larger than that tested previously, but it is considered to be feasible.

Test Conditions

The manufacturing processes necessary to industrially fabricate key components of the HD must be established. The composite ceramic liner provides the largest challenge, but fabrication of the support tube, and possibly the liner from Alloy 800H, and the assembly of the components with the wrapped ceramic insulation must be addressed.

Test Facilities to Support Component Manufacturing Development.

A suitable industrial manufacturer needs to be selected to develop the necessary techniques associated with the manufacture of the HD. The vendor should be capable of conducting all necessary engineering steps required to deliver a finished product that meets NGNP design specifications and can be inspected to ensure compliance with nondestructive examination requirements. The selection of the preferred vendor or vendors needs further exploration due to the highly specialized nature of the work and the limited number of vendors with such capability and availability.

Test Duration

The development of manufacturing processes and techniques must be completed prior to manufacturing the representative mockup. The development and manufacturing time is estimated to be approximately 28 months. A schedule of all tests required to move from TRL 5 to TRL 6 is shown in Fig. G-2.

Measured Parameters

Manufactured components should meet all required engineering tolerances specified in the reference design. Nondestructive examination should be conducted in compliance with the reference design requirements.

Deliverables

The following deliverables are required:

- Definition of the engineering processes necessary for the manufacture of the major components of the HD
- Delivery of at least two sections of an engineering-scale HD that can be tested as an engineering-scale demonstration

Test 2: Analytical Performance Assessment

Test Objective

The objective of this test is an analysis that assesses the thermal hydraulic and structural performance of the HD.

Test Conditions

This test is an analytical activity that requires no physical test facility. The conditions at which the analysis will be performed must be consistent with the operating conditions of the NGNP as follows:

Table G-1: Test Conditions

Parameter	Normal
T_{hot} (℃)	750
T_{hot} w/ hot streaks (℃)	900
T_{cold} (℃)	325
Pressure (MPa)	6.0 (nom)
	7.0 (depressurization case)
Mass Flow Rate (kg/sec)	141 (nom)
	165 (max)

Proposed Test Location

This task should be performed by the design organization or a subcontractor to the design organization.

Test Duration

The analysis is estimated to take approximately eight months. A schedule of all tests required to move from TRL 5 to TRL 6 is shown in Fig. G-2.

Measured Parameters

The following parameters are to be either measured or calculated:

- Steady-state heat loss from the hot side of the HD to the cold side
- Maximum temperatures on liner surface considering hot streaking from the core
- Temperature profiles during transient events

- Structural performance during depressurization events
- Steady-state and transient stress analyses of the Hot Duct components
- Lifetime predictions considering steady-state and transient conditions as well as probabilistic risk assessment (PRA) inputs

Other parameters may be considered necessary depending on the results of detailed design activities.

Deliverables

The following deliverables are required to document the results of the analysis:

- Steady-state and transient temperature distributions
- Steady-state and transient stress distributions
- Predicted lifetime
- Sensitivity studies for key parameters, such as temperature, pressure differentials, etc.

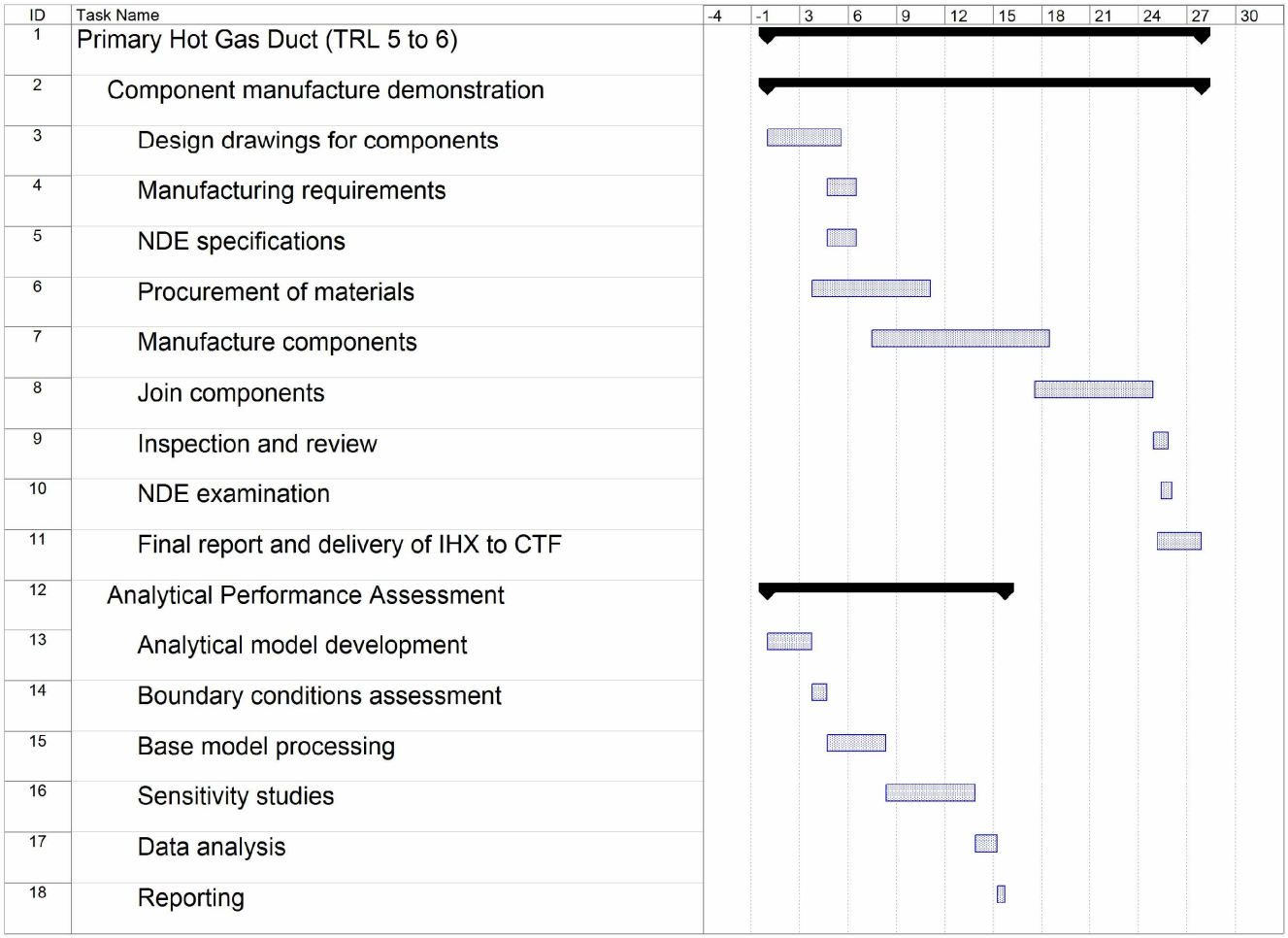

Fig. G-2: Test Schedule for Hot Duct for TRL from 5 to 6

G.2 Hot Duct (TRL 6 to 7)

NGNP Heat Transport System

Test Plan for Hot Duct TRL 6 to 7

Introduction

The Hot Duct (HD) is located internal and coaxial to the Cross Vessel between the Reactor Pressure Vessel and the Steam Generator Vessel. The HD is a multi-layered, insulated assembly that allows for the separation of hot and cold primary coolant within a single vessel. Hot helium coolant (nominally at 750℃ with hot streaks up to 900℃) f rom the core travels internal to the HD while cooler helium at 325℃ returns to the core in the annulus between the outside of the HD and the inside of the Cross Vessel. A cross section of the HD is illustrated in Fig. G-3.

This test plan proposes a single test that covers the integration of the HD as a system in an engineering scale demonstration.

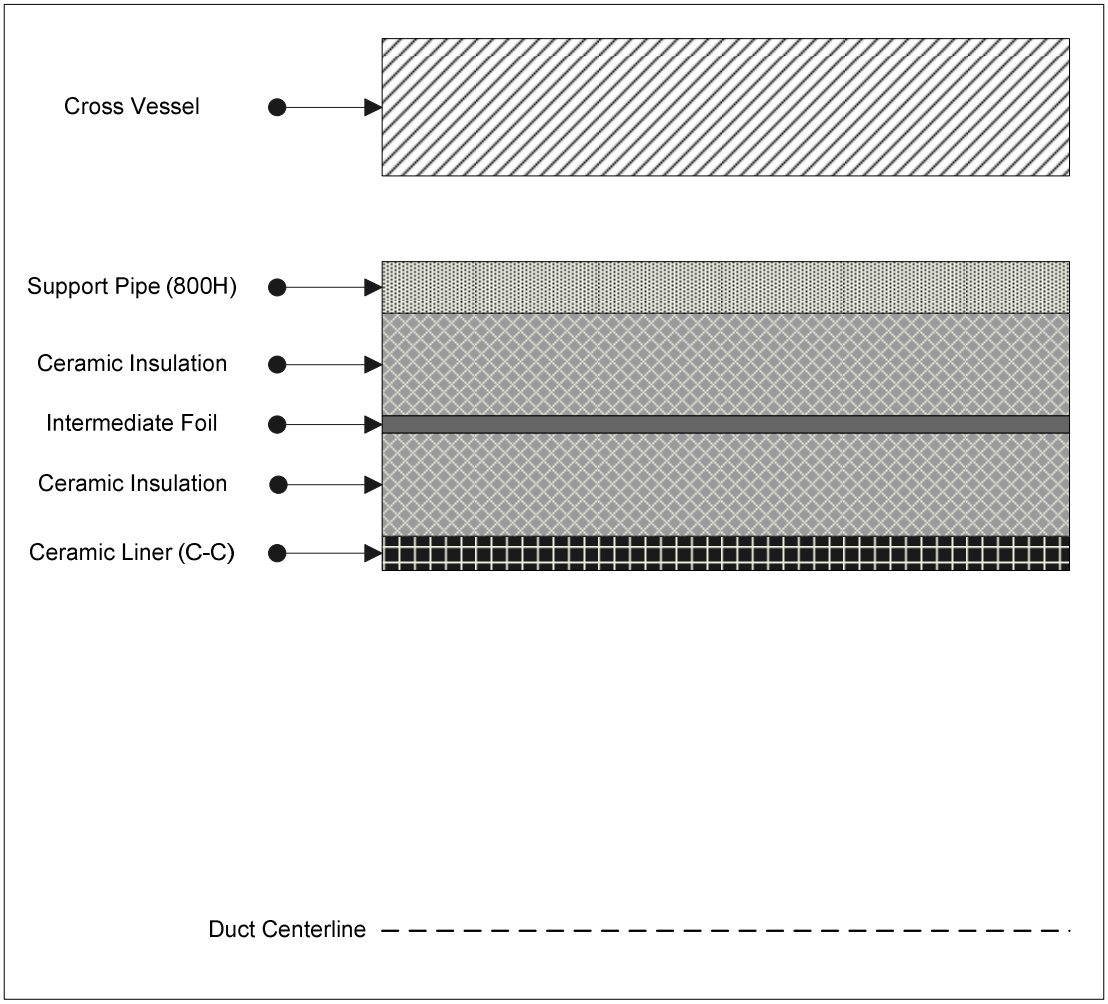

Fig. G-3: Hot Duct Layout

Technology Description and Readiness Level

Plant:	NGNP
Area:	Heat Transport System
System:	Main Heat Transport System
Subsystem/Structure:	N/A
Component:	Hot Duct

Technology Readiness Level

Current TRL:	6
Next TRL:	7

Required Tests to Achieve Next TRL

The following test is required for the HD to reach a TRL of 7:

Test 1. Engineering Scale Demonstration

Test 1: Engineering Scale Demonstration

Test Objective

The objective of this test is to demonstrate the performance of the HD under typical operating conditions and to measure the effectiveness and durability of the unit. The thermal hydraulic and thermomechanical performance will be determined to support validation of analytical design modeling and predictions.

Test Conditions

Functional tests will be performed over the full range of expected aerodynamic conditions (mass flow rate, pressure, and temperature) during startup, normal operation, shutdown, and transient conditions. Cycling tests (i.e., ramping between steady state conditions) and steady-state operation tests are required.

A detailed design of the connections between the HD and the Steam Generator and Reactor Core internals will need to be addressed prior to testing of the final HD. Provisions for instrumentation also need to be considered prior to installation in the test loop.

The number of cycles or hours needed to achieve meaningful results will be determined in conceptual design. Normal service conditions to be tested are as follows while transient conditions will be defined later in the design process for NGNP:

Table G-2: Test Conditions

Parameter	Normal	Startup
T_{hot} (℃)	750	100
T_{cold} (℃)	325	100
Internal Pressure (MPa)	6.0	0.1
External Pressure (MPa)	TBD	TBD
Velocity (m/s)	TBD	TBD

Hot Duct degradation will be measured via post-test visual examination for material anomalies, including surface wear, deformations, and corrosion. Also, if the HD has a bolted connection, any sealing or gasket joint surface shall be subjected to nondestructive examination (pre- and post-liquid penetrating dye or penetrating fluorescent examination).

Setup Requirements

The following equipment is required for the test:

- A helium test loop including gas supply, piping, pressure gages, thermocouples, gas flow instrumentation, controllers, and data recorders
- Dimensional and torque measuring instruments to measure the pre- and post-test torque required to hold and seal the HD fasteners during testing
- Nondestructive examination capability (may be penetrating dye or penetrating fluorescent)
- Contact pyrometers or thermocouples to measure temperatures at key locations

Proposed Test Location

A facility does not exist where this testing can be conducted. It is recommended that this test be conducted in the 30 MW_{th} test loop at the Component Test Facility at Idaho National Laboratory.

Test Duration

The HD test duration is estimated to be 19 months and includes fabrication, pre-test examination, installation, testing, post-test examination, and data reporting. A schedule of all tests required to move from TRL 6 to TRL 7 is shown in Figure G-4 at the end of this test plan.

Measured Parameters

The following parameters will be measured before, during, and after testing:

- All applicable welds and connection surfaces will be inspected via nondestructive examination using either a penetrating dye or penetrating fluorescent prior to testing and post-testing
- Radial temperature profile as a function of pressure inside the duct (℃)
- Pressure response of the thermal insulation during depressurization events (kPa)
- In-duct and exterior sound power levels and frequencies (dB vs. Hz)
- Deformation in all directions (mm)
- Thermal expansion in all directions (mm)
- Examination of the insulation material
- Temperature profile along the duct (℃)
- Pressure drop across the duct (kPa)
- Examination of the ceramic spacers
- Pre- and post-test preload on all relevant fasteners

This list will expand if further data are found to be necessary during the detailed design activities or during activities performed by the HD vendor.

Data Requirements

The required measurement accuracy for all test parameters will be determined during conceptual design. All data will be collected in a manner consistent with NQA-1.

Deliverables

The following deliverables are required to document the results of the testing:

- All manufacturing data for the HD including Certified Material Test Reports (CMTRs), analytical data, nondestructive examination data, and manufacturing reports
- A characterization report documenting the thermal hydraulic and thermomechanical behavior of the HD (heat resistance and acoustics), with characterization of the stresses experienced during transient events for the various subcomponents
- All thermal expansion data and all raw test data
- Recommendations for design optimization
- Post-optimization verification testing (if required)

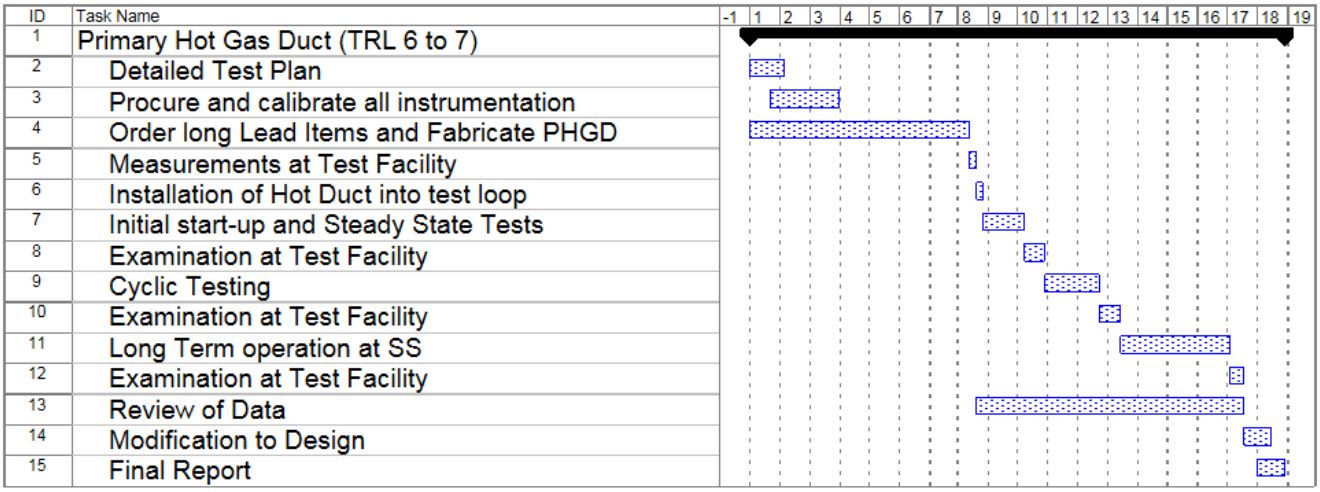

Fig. G-4: Test Schedule for Hot Duct for TRL from 6 to 7

APPENDIX H: STEAM GENERATOR TEST PLANS

H.1 Steam Generator (TRL 6 to 7)

NGNP Power Conversion System

Test Plan for Steam Generator TRL 6 to 7

Introduction

The Steam Generator (SG) illustrated in Fig. H-1 is the link between the heat transport loop and the Power Conversion System (PCS). Steam generator technology is very mature. However, due to the higher temperature operation and large size of the NGNP Steam Generators, some testing is recommended to confirm performance before installation into the plant. The recommended testing is described in this test plan.

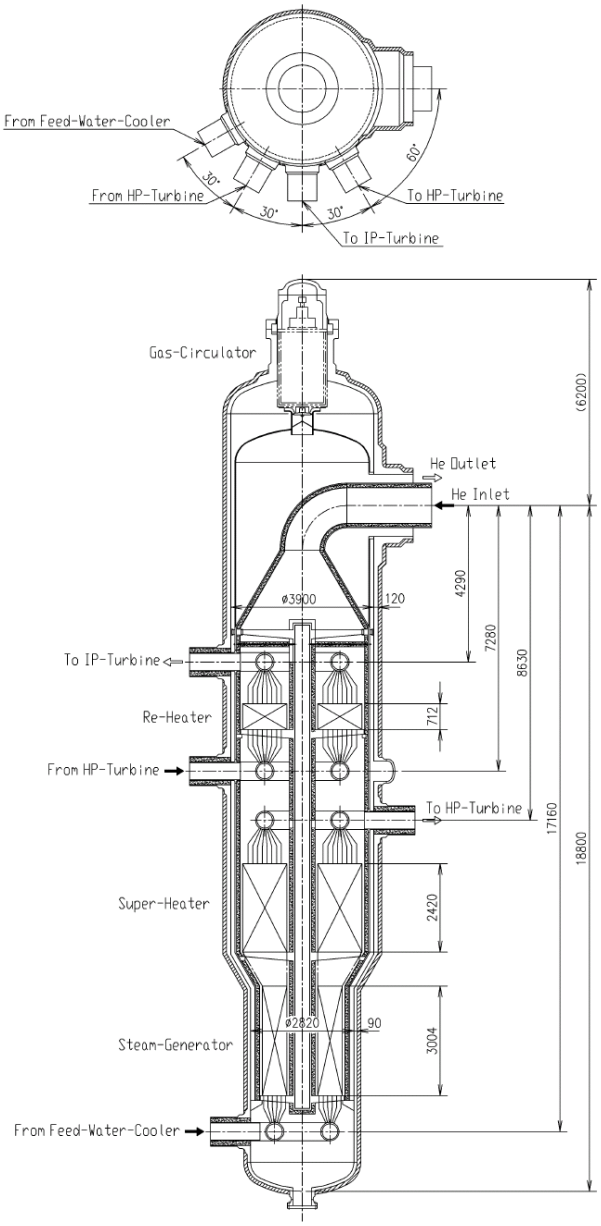

Fig. H-1: Steam Generator Cutaway

Technology Description and Readiness Level

Plant:	NGNP
Area:	Heat Transport System
System:	Main Heat Transport System
Subsystem/Structure:	N/A
Component:	Steam Generator

Technology Readiness Level

Current TRL:	6
Next TRL:	7

Required Tests to Achieve Next TRL

The following four tests are required for the SG to achieve a TRL of 7. These tests are as follows:

Test 1. Qualification of Bimetallic Welds

Test 2. Characterization and Codification of Alloy 800H

Test 3. Component Manufacturability Development

Test 4. Testing of Engineering Scale Prototype

Test 1: Qualification of Bimetallic Welds

Test Objective

The objective of this test is to characterize the properties of the bimetallic welds at the evaporator and superheater tube bundle.

Background Information

Although extensive experience with welding Alloy 800H to 2.25Cr1Mo exists, qualification of the vendor weld process for the NGNP is recommended.

Test Conditions

Testing under conditions similar to those expected in the NGNP is needed for the bimetallic (Alloy 800H to 2.25Cr1Mo steel) weld joints located at the evaporator and superheater tube bundle. The tests will be conducted in air at temperatures up to 700 ºC for 10,000 hours.

Test Facility to Support Qualification of Welds

The required tests are standard material tests in air at high temperature. No special equipment or facility is required.

Proposed Test Location

The testing is standard material testing that can be conducted by the national laboratories at ORNL, INL, and PNNL or at a university.

Test Duration

The materials testing must be completed over long periods (10,000 hours) but the samples are standard material coupons to be tested in standard test apparatus. Therefore, the setup time for the testing will be short and the testing can be completed in 18 months. A schedule of all tests required to move from TRL 6 to TRL 7 is shown in Fig. H-2.

Measured Parameters

The measured parameters for the testing of the bimetallic welds are:

- Tensile strength
- Creep rupture
- Fatigue

Data Requirements

The accuracy of all measurements taken during the tests will comply with the standards required to support codification. All data collection will comply with NQA-1.

Deliverables

The primary deliverable required to document the results of this testing is the characterization data for the bimetallic welds. The following information will be provided:

- Raw test data
- Photographic and video recordings
- Data and design rules for calculating creep fatigue damage at high temperatures
- Data defining tensile and creep properties and allowable stress limits

Test 2: Characterization and Codification of Alloy 800H

Test Objective

The objective of this test is to expand the material data base on Alloy 800H to meet the requirements for NGNP. The design requirements are under development.

Background Information

The temperature operating range on the shell side for conventional plant steam generators is on the order of 750 ºC. Alloy 800H is already approved for use up to 760℃ under ASME Boiler and Pressure Vessel Code Section III, Subsection NH and efforts are in progress to extend its use to higher temperatures. Long term material tests at higher temperatures are needed expand creep and fatigue data for 800H up to the plant design life. The SG design life has not been established but plant reliability, availability, and economic considerations favor setting it as close to the plant design life of 60 years as data permits.

Test Conditions

The required testing needs to expand the materials database for Alloy 800H beyond the temperatures that will be encountered in the NGNP. The tests will be conducted at temperatures up to 750 ºC in a representative atmosphere.

Test Facility to Support Characterization and Codification of Material

The required tests are standard material tests in air at high temperature. No special equipment or facility is required.

Proposed Test Location

The tests are standard material tests that can be conducted by the national laboratories at ORNL, INL, and PNNL, or at a university.

Test Duration

The required materials tests must be completed over long periods (50,000 hours) but the samples are standard test coupons that will be tested in standard test apparatus. Therefore, the setup time for the testing will be short and the testing can be completed in 18 months. A schedule of all tests required to move from TRL 6 to TRL 7 is shown in Fig. H-2.

Measured Parameters

The measured parameters for the tests of Alloy 800H are:

- Tensile strength
- Creep rupture
- Fatigue

Data Requirements

The accuracy of all measurements taken during the tests will comply with the standards required to support codification. All data will be collected in a manner consistent with NQA-1.

Deliverables

The primary deliverable required to document the results of this testing is a code case for Alloy 800H. The following information will be provided:

- Raw test data
- Photographic and video recordings
- Data and design rules for calculating creep fatigue damage at high temperatures
- Data defining tensile and creep properties and allowable stress limits

Test 3: Component Manufacturability Development

Test Objective

The objective of this test is to demonstrate that the forging process for the ring-shaped hot header for the Steam Generator is adequate.

Background Information

The ring-shaped hot header is installed in the SG at the hot end and operates at the inlet temperature of 750 ºC. While there is a high confidence in the manufacturability of the hot header, the fabrication method has not been established for the required forging size. Therefore, fabrication testing is required.

Test Conditions

The tests will include evaluation of the forging processes by the forging vendor, as well as alternative manufacturing methods (e.g., bending plates, using pipe fittings). This development testing will be performed on done at full scale header components.

Test Facilities to Support Development of Manufacturing of Components.

Forging process development will be conducted at the forging vendor's facility. Alternate manufacturing methods testing will be conducted by a pipe fitting vendor, or at an MHI fabrication facility.

Test Duration

The forging process development and alternative manufacturing methods development will be conducted in parallel over approximately 20 months. A schedule of tests required to move from TRL 6 to TRL 7 is shown in Fig. H-2.

Deliverables

The deliverable is a definition of the engineering processes for manufacturing the ring-shaped hot header for the Helical Tube Steam Generator will be contained in a test report.

Test 4: Engineering Scale Demonstration

Test Objective

The objective of this test is to demonstrate the performance of the Steam Generator under design conditions and to measure it's effectiveness and durability. The following objectives will be achieved by this test:

- Thermal hydraulic performance test of the SG
- Flow stability, and test of water and steam system control
- Analytical estimation and validation of flow induced vibration behavior of the tube bundle
- In service inspection (ISI) of tubes with trial ISI equipment (if inspection of tubes required)

Power testing at approximately one-tenth scale will be adequate to meet the test objectives. During the test, the helium velocity, pressure, and temperature will be maintained similar to what would be seen in the NGNP. This scale testing will produce the needed results by keeping the number of helical tube layers at more than three and the tube size and pitch equivalent to the NGNP configuration.

Background Information

The proposed design of the helical tube Steam Generator for the NGNP builds experience gained from building a similar unit for the Fast Breader Reactor. Tests would be conducted to validate complete unit manufacturing, to optimize the design, and to demonstrate the functionality under the operating parameters. AREVA recommends making the decision to have this test after assessing the impact of Steam Generator performance risk on the project risk.

Test Conditions

The engineering scale tests shall cover the range of temperature, pressure differential, and flow range conditions of NGNP operation during startup, normal operation, shutdown, and transients. Normal service conditions to be tested are as follows:

Table H-1: Test Conditions

Primary Side T_{hot} (℃)	750
Primary Side T_{cold} (℃)	320
Primary Side Pressure (MPa)	6
Primary Side Flow Rate (kg/sec)	14.1
Secondary Side T_{hot} (℃)	566

Secondary Side T_{cold} (℃)	281
Secondary Side Pressure (MPa)	16.7
Secondary Side Feed Water Flow Rate (kg/sec)	14.1
Power Rating (MW_{th})	30

Testing should be performed with varying primary and secondary circuit flow rates to establish the heat removal capability as a function of flow rate.

Test Facility Required To Support Functional Testing

A high temperature helium test loop and secondary water and steam loop capable of operating over the operating conditions described above are needed. Initial calculations indicate a heat source equivalent to 30 MW_{th} should be sufficient to conduct the tests. The test facility should be instrumented with real-time monitoring to allow the measurement of temperature and flow rates on the primary and secondary circuits during testing of the unit over the range defined in the test operating conditions.

Proposed Test Location

A Component Test Facility with a 30 MW_{th} loop has been proposed for testing at the Idaho National Laboratory.

Test Duration

The engineering scale testing should be completed prior to manufacturing the NGNP helical tube steam generator. The test duration is estimated to be approximately 12 months. A schedule of all the activities required as part of this development activity (design, installation, test, post test measurements and reporting) is shown in Fig. H-2.

Measured Parameters

The following parameters are required to be measured before, during, and after testing:

- Strains in tube plate, tube bundle, and hot header
- Distribution of primary flow in tube bundle
- Flow induced vibration
- Bypass flow between tubes and outer shell
- Effectiveness (ratio of heat transferred to the maximum possible with an infinite area) of the Steam Generator as a function of operating parameters
- Physical and nondestructive examination of all internal components following test

This list will expand if further data are found to be needed during detailed design activities or as a result work done by the heat exchanger vendor.

Data Requirements

All data shall be collected in a manner consistent with NQA-1.

Deliverables

The following deliverables are required to document, in the form of a test report, the results of the testing:

- Raw test data
- Data characterizing the thermal hydraulic behavior of the SG
- Characterization of the stresses and strains experienced during transient events for the various subcomponents (hot header, tube bundle, etc.)
- Report on the visual inspection and nondestructive examination of the component following testing

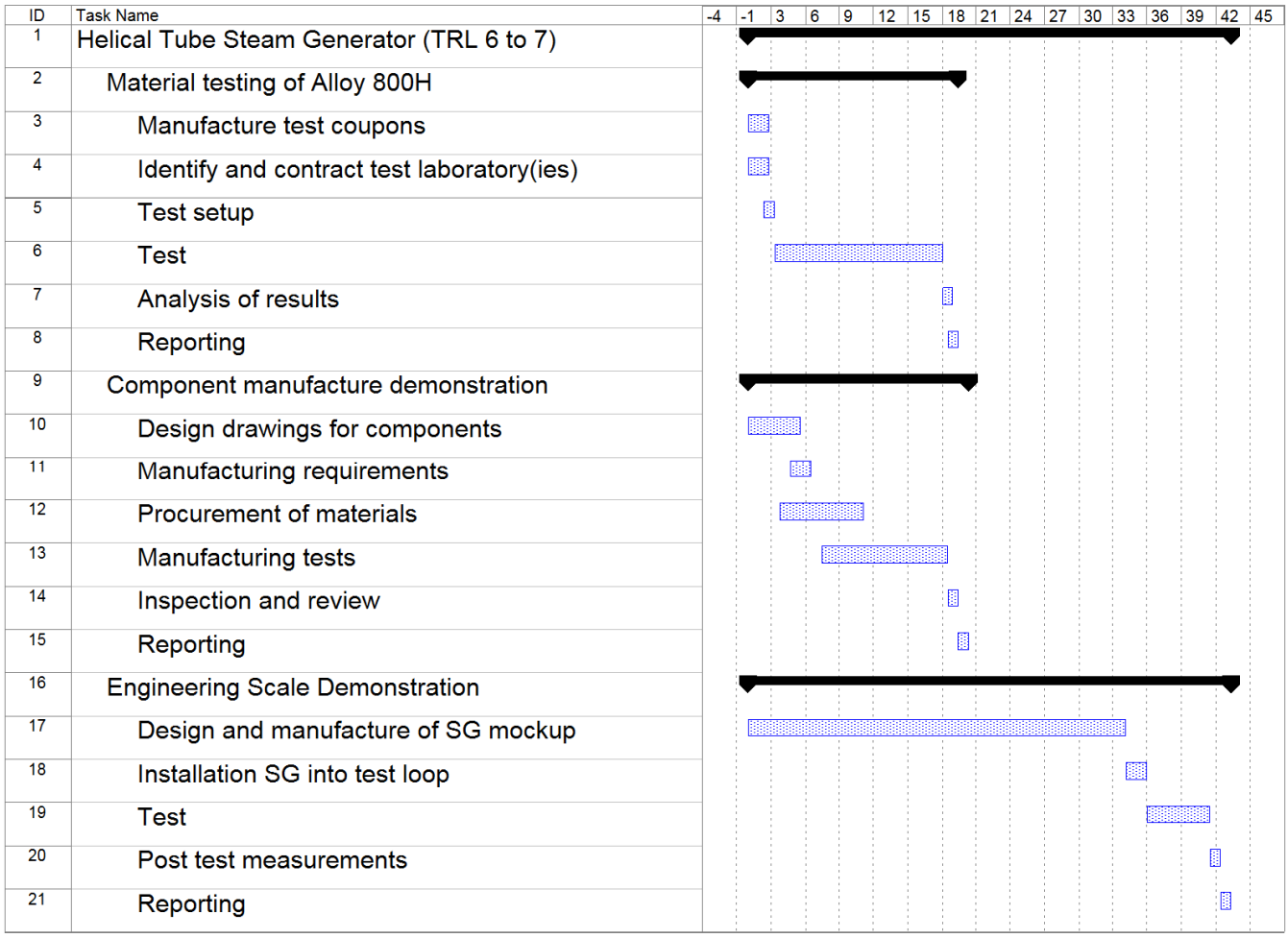

Fig. H-2: Test Schedule for Steam Generator for TRL from 6 to 7

APPENDIX I: PRIMARY LOOP INSTRUMENTATION TEST PLANS

I.1 Primary Loop Instrumentation (TRL 6 to 7)

Other Reactor Support Systems

Test Plan for Primary Loop Instrumentation TRL 6 to 7

Introduction

The Primary Loop Instrumentation is used with Nuclear Instrumentation to control the neutron flux and operating pressure and temperature in the Reactor Core.

The Primary Loop Instrumentation included in this test plan is the critical PASSC required for plant protection and Plant Control System measurements. The NGNP Preconceptual Design identified the following sensor inputs from the primary loop: flow rate measurements, reactor cold leg temperature sensors, reactor hot leg temperature sensors, pressure sensors, and moisture sensors. The signals from these instruments provide inputs to the Plant Protection System, the Plant Control System, and the Plant Monitoring System. The flow rate, pressure, humidity, and temperature signals are part of the safety system and are part of the reactor trip control logic. The moisture level is also monitored by the operator and used to manually control the Helium Service System, which removes moisture and other impurities to prevent material corrosion in the reactor and primary loop.

The NGNP conceptual design activities will determine accident scenarios, the required measurements, the sensor environment, and the sensor requirements for each instrument. Some preliminary values are shown in Table I-1.

Table I-1: Sensor Operating Parameters

Sensor	Precision	Operating Range	Survival Range
Temp HL	2-3%	< 750°C < 6 MPa	< 900°C < 7 MPa
Temp CL	2-3%	< 350°C 6 MPa	< 400°C 7 MPa
Pressure	2%	100°C – 300°C 7 MPa	200°C – 300°C 7 MPa
Flow Rate	1 RPM circ speed	n/a	n/a
Moisture (Reactor Protection System)	10%	100-1000 vpm 200°C 7 MPa	200°C 7 MPa
ΔP	5%	0.0 – 0.1 MPa 100°C – 300°C 7 MPa	200°C – 300°C 7 MPa
Moisture (monitored)	10%	2 – 100 vpm 100°C – 300°C 7 MPa	200°C – 300°C 7 MPa

These instruments are commercially available but have not been used at NGNP operating pressures and temperatures. Testing is required to verify acceptable accuracy, sensitivity, and lifetime. The tests will include testing candidate designs of the sensor-loop mechanical interface to determine if designs or interfaces impact the accuracy of the measurements and whether the device is leak tight. More than one type of sensor may be used for each application to improve reliability.

Technology Description and Readiness Level

Plant:	NGNP
Area:	Other reactor support systems
System:	NHS Plant Control and Monitoring System
Subsystem/Structure:	Primary Loop Instrumentation
Component:	Sensors

Technology Readiness Level

Current TRL:	6
Next TRL:	7

Required Tests to Achieve Next TRL

Tests will be performed in helium under simulated plant conditions to reach TRL 7. Tests need to be performed at expected reactor startup, normal, shutdown, and off-normal operating conditions. Two tests are required for each component.

Test Conditions

The test conditions will cover the range covering cold startup (ambient pressure and temperature), normal operation (750℃ and 6.0 MPa on the hot side), and off-normal conditions, identified in Table I-1.

Setup Requirements

A small helium test loop with pressure and temperature controls, and data recording system is required.

Proposed Test Location

The tests are proposed to be conducted in the 1 MW_{th} loop of the Component Test Facility at the Idaho National Laboratory.

Test Duration

The verification and qualification tests of the Primary Loop Instrumentation should be completed during NGNP conceptual design. The duration of the testing of flow rate, temperature, pressure, and moisture sensors is nine months. A schedule of all tests required to move from TRL 6 to TRL 7 is shown in Fig. I-1.

Measured Parameters

The following parameters will be measured:

- Flow rate (kg/s)
- Moisture (%)
- Pressure (MPa)
- Temperature (^{o}C)
- Number of thermal cycles
- Time (at test conditions) (hours)

Data Requirements

The required accuracy of the data and performance requirements needed to support plant design and operations will be established during NGNP conceptual design phase. All data will be collected in a manner consistent with NQA-1.

Deliverables

The following deliverables are required to document the results of the testing:

- Raw test data recorded in a dedicated log book
- Pictures and video recordings
- Copies of certificates of calibration for instrumentation
- Test report including analysis of sensor performance
- Recommendations

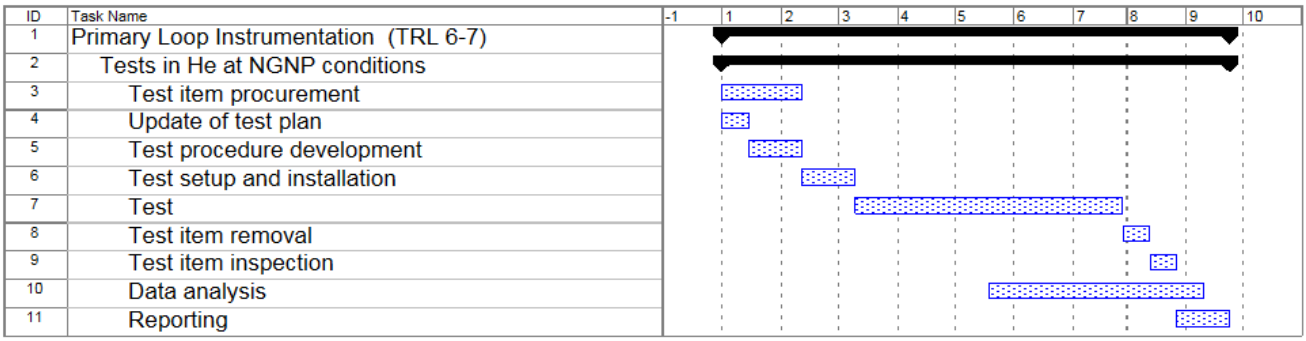

Fig. I-1: Test Schedule for Primary Loop Instrumentation for TRL from 6 to 7

APPENDIX J: FUEL HANDLING SYSTEM TEST PLANS

J.1 Fuel Handling Machine (TRL 6 to 7)

Other Reactor Support Systems
Test Plan for
Fuel Handling Machine
TRL 6 to 7

Introduction

This Fuel Handling System, illustrated in Fig. J-1, test plan describes actions needed to move the Technology Readiness Level (TRL) from 6 to 7. These actions involve identification and testing of materials for seals, bearings, and lubricants for use in the high purity helium environment of the NGNP.

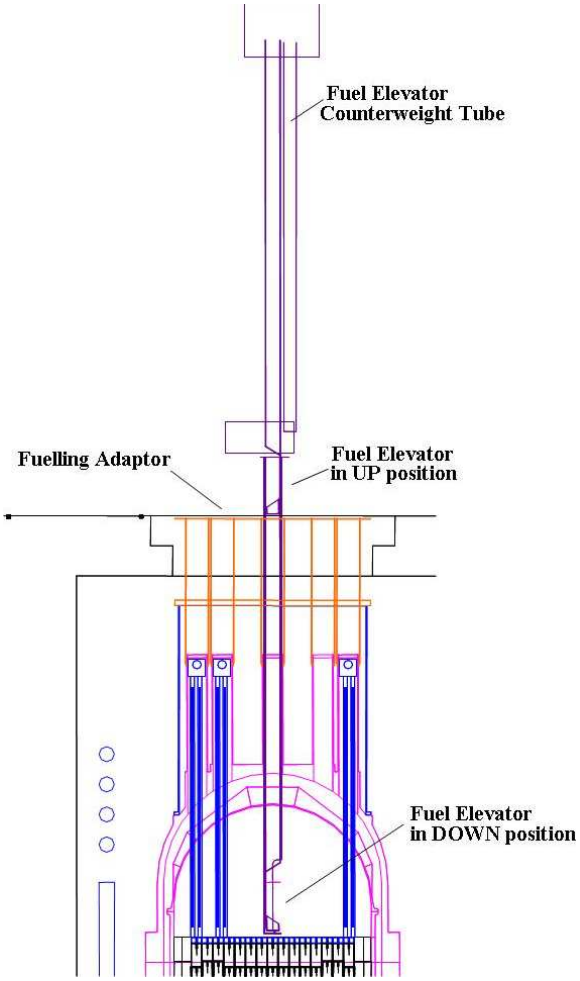

Fig. J-1: Fuel Handling Machine

Technology Description and Readiness Level

Plant:	NGNP
Area:	Other reactor support systems
System:	Reactor Support Systems
Subsystem/Structure:	Fuel Handling Machine
Component:	N/A

Technology Readiness Level

Current TRL:	6
Next TRL:	7

Required Tests to Achieve Next TRL

The following tests are required:

Test 1. Seal selection tests

Test 2. Bearing selection tests

Test 3. Lubricant selection tests

Test 4. Component functional and endurance tests

In addition, each major Fuel Handling System subcomponent (Fueling Adaptor, Fuel Elevator, Fuel Handling Machine, Fuel Server) must be tested for function and endurance to ensure compliance with design and operational requirements before being assembled at the NGNP site. This testing includes the physical operation of the subcomponent and all controlling electronics and computer coding.

Test 1: Seal Selection Test

Test Objective

The objective of the first test is to identify a suitable material, or set of materials, for use in the various soft seals within the Fuel Handling Machine and to perform tests that verify the expected performance. As currently configured, the Fuel Handling System contains the following soft seals:

- Fueling Adaptor-to-Control Rod/ Instrumentation Penetrations
- Fuel Elevator-to-Fueling Adaptor
- Fuel Handling Machine-to-Fueling Adaptor
- Fuel Server-to-Fuel Handling Machine
- Near Module Spent Fuel Storage-to-Fuel Server

The exact configuration of these seals, including initial material selections and resulting key performance parameters, will be known only after completion of later design activities. The test parameters provided in this plan are general and will need to be updated in more detail as information becomes available.

Test Conditions

It is assumed all of these seals will be exposed to helium at refueling temperature (assumed at this time to be 100℃, which must be verified once the a ppropriate calculations are conducted) on one side and at ambient atmosphere on the other side. The pressure difference across the seal is expected to be small. The side that will be higher will depend on analysis of the tradeoff between potential release of radionuclides against the potential for contamination of the primary coolant loop.

It is also assumed there will be testing of the seals under accident conditions, which are undefined at this point. Test temperatures, durations, and seal performance requirements can be established after detailed safety analyses of the appropriate refueling accidents are conducted.

Test Configuration

The configuration of the individual tests can be determined once the seal geometries are known.

Test Duration

Individual test durations need to be sufficient to evaluate the measured parameters described below. The seal components testing is estimated to take from six months to one year. The testing can begin after the design of the Fuel Handling Machine hardware is completed and after appropriate accident analyses have been performed. This will provide definition of the required test geometries and conditions. Testing multiple seal types, to cover the seal needs of the different components, should be conducted in parallel to minimize overall test time. The anticipated schedule for seal testing is based on testing a single seal type. The preliminary schedule for all of the activities required to perform this test (seals design, procurement, test plan update, test plan development, test loop

identification and contacting, setup and installation, testing, seals removal, data analysis, and reporting) is presented in Fig. J-2.

Proposed Test Location

The tests can be performed at many qualified material testing facilities.

Measured Parameters

The following parameters will be measured:

- Resistance of the seal surface to mechanical abrasion by mating components, both during assembly/disassembly (sliding wear) and during system operation (wear due to vibration)
- Loss of seal elasticity as a function of time at design compression (seal material “creep”)
- Loss of seal elasticity as a function of compression cycles (seal material fatigue)
- Seal vendor data will also be used to provide an assessment of uncompressed seal elasticity degradation in ambient air as a function of time

Data Requirements

The requirements for collection and evaluation of the data produced by these tests are based on the safety significance of the Fuel Handling Machine seals. Once these determinations have been made, the data requirements can be established. All data shall be collected in a manner consistent and compliant with NQA-1.

Test Evaluation Criteria

The results of these tests will be used to provide an evaluation of the expected lifetime of the soft seals as a function of both number of refueling cycles and overall seal age. The acceptability of the results will be based on the cost and ease of replacement of each individual seal.

Deliverables

These tests will provide an evaluation of the expected useful lifetime of each soft seal within the Fuel Handling Machine. The testing and results will be documented in a test report.

Test 2: Bearing Selection Tests

Test Objective

The objective of this activity is to identify a suitable material for use in the various bearings within the Fuel Handling Machine and to perform appropriate tests to verify expected performance. A second objective is to identify bearings that require lubrication.

The bearings considered in this activity are those within the helium boundary of the Fuel Handling Machine. Bearings outside of this boundary are considered to be normal industrial components that do not require specialized development or testing. Specific bearing requirements, locations, and operating environments will be determined based on the detailed design of the Fuel Handling Machine equipment and the calculations of core conditions during normal refueling activities and accident conditions.

Test Conditions

It is assumed all bearings are within the helium boundary and will operate at a minimum temperature of 100°C, based on the helium temperature conditions described for Test 1. Increases in temperature and the impacts of the local radiation field for bearings in close proximity to the fuel blocks, or in those that must remain operational under accident conditions will also be considered in the test program, based on calculated decay heat production and accident temperatures. The bearing performance tests will be conducted in a helium environment.

Test Configuration

The configuration of the individual tests can be determined once the applicable seal geometries are known.

Test Duration

Individual tests must last long enough to evaluate the measured parameters described below. It is estimated the testing of the bearings may take from six months to one year. The testing can begin after the design of the Fuel Handling Machine hardware is complete and after appropriate accident analyses have been performed. This will provide definition of the required test geometries and conditions. Testing of multiple bearing types, to cover the needs of the different components, should be conducted in parallel to minimize test time. The anticipated schedule for bearing tests is based on testing a single bearing type. The preliminary schedule for this test series, including bearing design, procurement, test plan revision, procedure development, test facility identification and contracting, test setup and installation, testing, test item removal, data analysis, and reporting, is presented in Fig. J-2.

Proposed Test Location

The tests can be performed at many qualified material testing facilities.

Measured Parameters

The following parameters will be measured during the performance tests:

- Bearing performance in excess of the design requirements for the Fuel Handling Machine
- Identification of performance limiting conditions associated with elevated refueling accident temperatures

Data Requirements

The requirements for collection and evaluation of the data produced by these tests are based on the safety significance of the Fuel Handling Machine bearing. Once these determinations have been made, the data requirements can be established. All data shall be collected in a manner consistent and compliant with NQA-1.

Test Evaluation Criteria

The performance tests must be sufficient to demonstrate acceptable bearing performance within the system design requirements in a statistically significant manner.

Deliverables

The deliverables for this activity are:

- Identification of bearing materials for all Fuel Handling Machine applications that meet the appropriate design requirements
- Performance verification test results for bearings under normal operation and accident conditions
- Identification of bearing locations and applications that require lubrication
- Test report documenting the above data.

Test 3: Lubricant Selection Tests

Test Objective

The objective of this test is to verify the expected performance of the lubricants selected for use in the Fuel Handling Machine bearings. Performance parameters include the lubricating function, and the potential for contamination of the primary coolant loop with lubricant.

The lubricants considered in this activity are those required for bearings within the helium boundary of the Fuel Handling Machine. Lubricated bearings outside of this boundary are considered to be normal industrial components that do not require specialized development or testing. Specific lubrication requirements will be established upon completion of the final design of the Fuel Handling Machine equipment and completion of core environment calculations for both normal refueling conditions and applicable accidents.

Test Conditions

It is assumed all lubricated bearings within the helium boundary will operate at a minimum temperature of 100℃, based on the helium temperatu re conditions described for Test 1. Additionally, increases in temperature and impacts of the local radiation field for those lubricated bearings in close proximity to the fuel blocks, or in those that must remain operational under accident conditions, will be considered in the test program, based on calculated decay heat production and accident temperatures. These performance tests will be conducted in a helium environment.

Test Configuration

The configuration of the individual tests can be determined once the applicable lubricated bearing geometries are known.

Test Duration

Individual test durations must be sufficient to evaluate the measured parameters described below. It is estimated that the testing of the lubricants may take from six months to one year. The testing can begin after the design of the Fuel Handling Machine hardware is complete and after appropriate accident analyses have been performed. This will provide definition of the required test geometries and conditions. Testing of multiple lubricant types, of different components, should be conducted in parallel to minimize overall test time. The anticipated schedule for lubricant testing is based on the testing of a single lubricant type. The preliminary schedule for this test series, including identification of candidate lubricants, procurement, test plan revision, procedure development, identification and contracting a test facility, test setup and installation, testing, test fixture disassembly, data analysis, and reporting, is presented in Fig. J-2.

Proposed Test Location

The tests can be performed at many qualified material testing facilities.

Measured Parameters

The parameters to be measured include:

- Lubrication performance in excess of the design requirements for the Fuel Handling Machine
- Identification of performance limiting conditions associated with elevated refueling accident temperatures
- Determination of the material loss rate, and characteristics of the lost material, as a function of temperature

Data Requirements

The requirements for collection and evaluation of the data produced by these tests are based on the safety significance of the Fuel Handling Machine bearings. Once these determinations have been made, the data requirements can be established. All data shall be collected in a manner consistent with NQA-1.

Test Evaluation Criteria

The performance tests must be sufficient to demonstrate acceptable bearing lubrication performance within the system design requirements in a statistically significant manner. Additionally, the material released from the bearings shall not introduce the potential for unacceptable contamination of the primary coolant loop.

Deliverables

The deliverables for this activity are:

- Identification of lubricants for all appropriate Fuel Handling Machine applications that meet the specified performance requirements
- Performance verification test results for those lubricants under normal operation and accident conditions
- Material loss characteristics data under normal operation and accident conditions with an assessment of these loss rates on primary coolant loop contamination
- Test reports documenting the above data.

Test 4: Component Functional and Endurance Tests

Test Objective

The objective of these tests is to ensure each Fuel Handling System subcomponent operates as designed prior to shipment to the NGNP site and assembly into an integrated system. Specific design requirements for each portion of the Fuel Handling Machine will be developed during the initial phase of the detailed design activities for this system. Operational test plans will be developed based on these design requirements.

Test Conditions

General functional tests can be conducted in air at room temperature. Specific functionality of those parts of the Fuel Handling Machine exposed to significantly elevated temperatures within the core region will be tested at appropriate temperatures. The test atmosphere requirements for the endurance tests will be designed to mimic the elevated temperatures and helium atmosphere of the expected operating environment.

Test Configuration

Each subsystem will be tested by using jigs and test fixtures to mimic key aspects of interfacing subcomponents.

Test Duration

All functional tests are envisioned as short-duration operability checks. The long-term endurance testing is planned to mimic a refueling outage where the fuel is being handled 24 hours a day for at least 25 days. The cost and schedule of these tests will be included within the work scope for the supply of the Fuel Handling System subcomponents. The testing of each subcomponent may have to be conducted in series, with the potential for some limited overlap, should all of the subcomponents be fabricated by the same vendor. The preliminary schedule for this test series is presented in Fig. J-2.

Proposed Test Location

These tests will be conducted at qualified subcomponent vendor’s facilities prior to shipment to the NGNP site.

Measured Parameters

For each subcomponent, parameters that impact operational performance and interface considerations will be assessed. These parameters may include operability under expected loads, repeatability of movements in space, system stability, and etc. The subcomponent’s operation and stability of the electronics and software associated with operation will be assessed as part of the testing process.

Data Requirements

These tests are envisioned as pass-fail. Therefore, no data will be generated beyond that needed to make this assessment.

Test Evaluation Criteria

The success of these tests will be based on the ability of the subcomponents to meet their operational requirements, including continuous operation during a mock refueling outage.

Deliverables

The deliverable will be a report identifying the tests conducted and certifying that the subsystem successfully passed the tests.

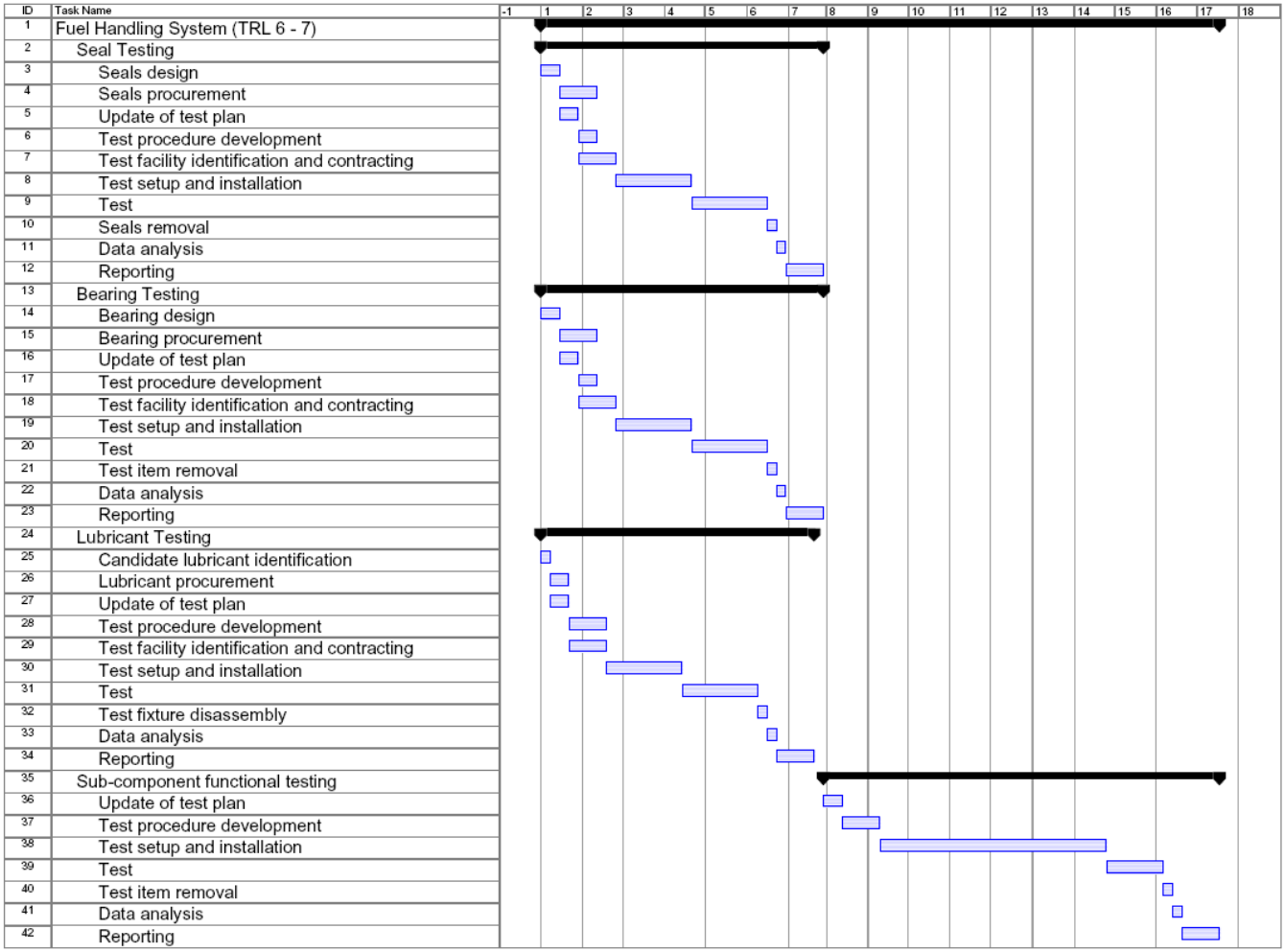

Fig. J-2: Test Schedule for Fuel Handling Machine for TRL from 6 to 7

APPENDIX K: TECHNOLOGY DEVELOPMENT ROAD MAPS

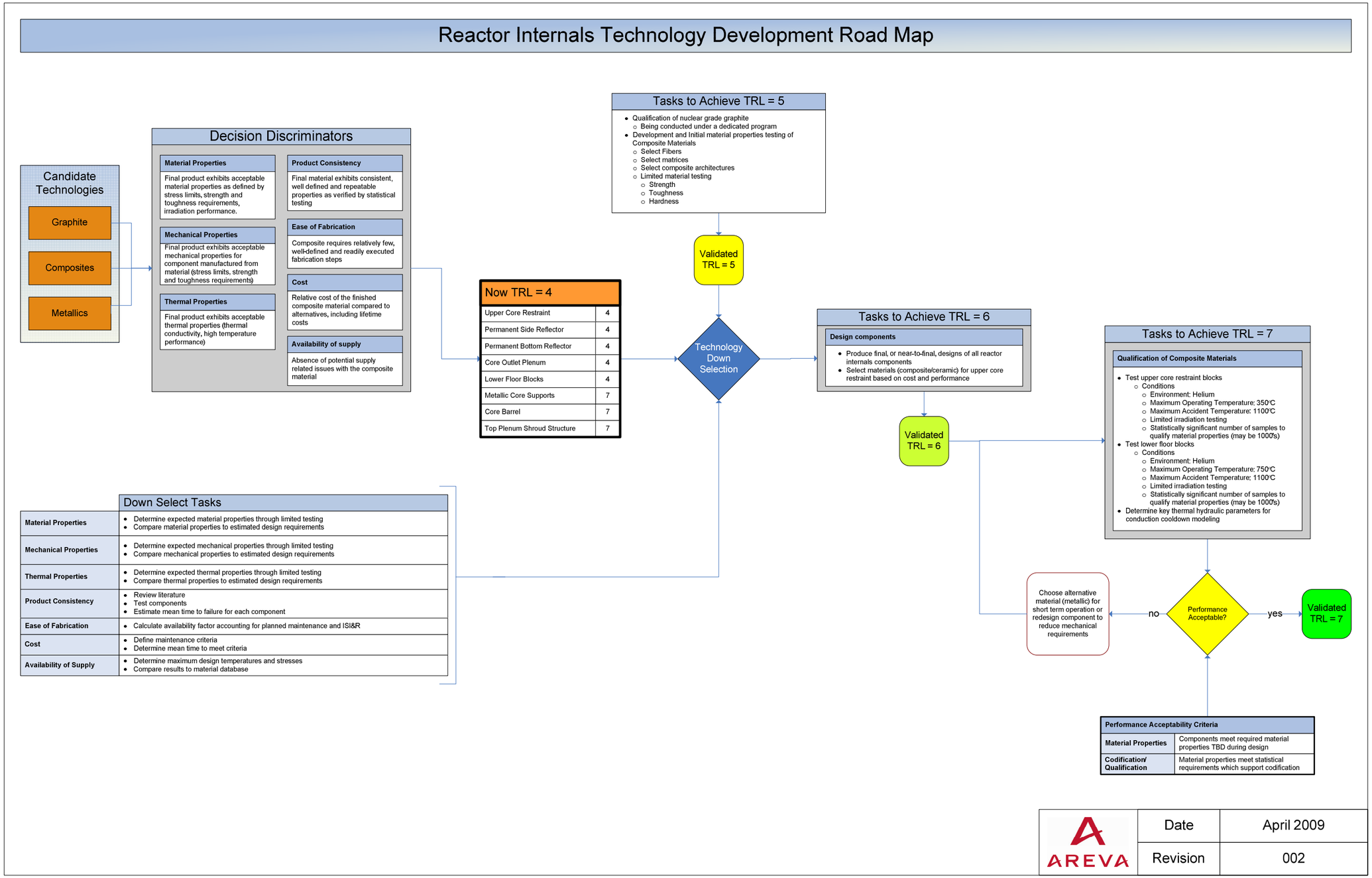

Figure K-1: Reactor Internals Technology Development Road Map

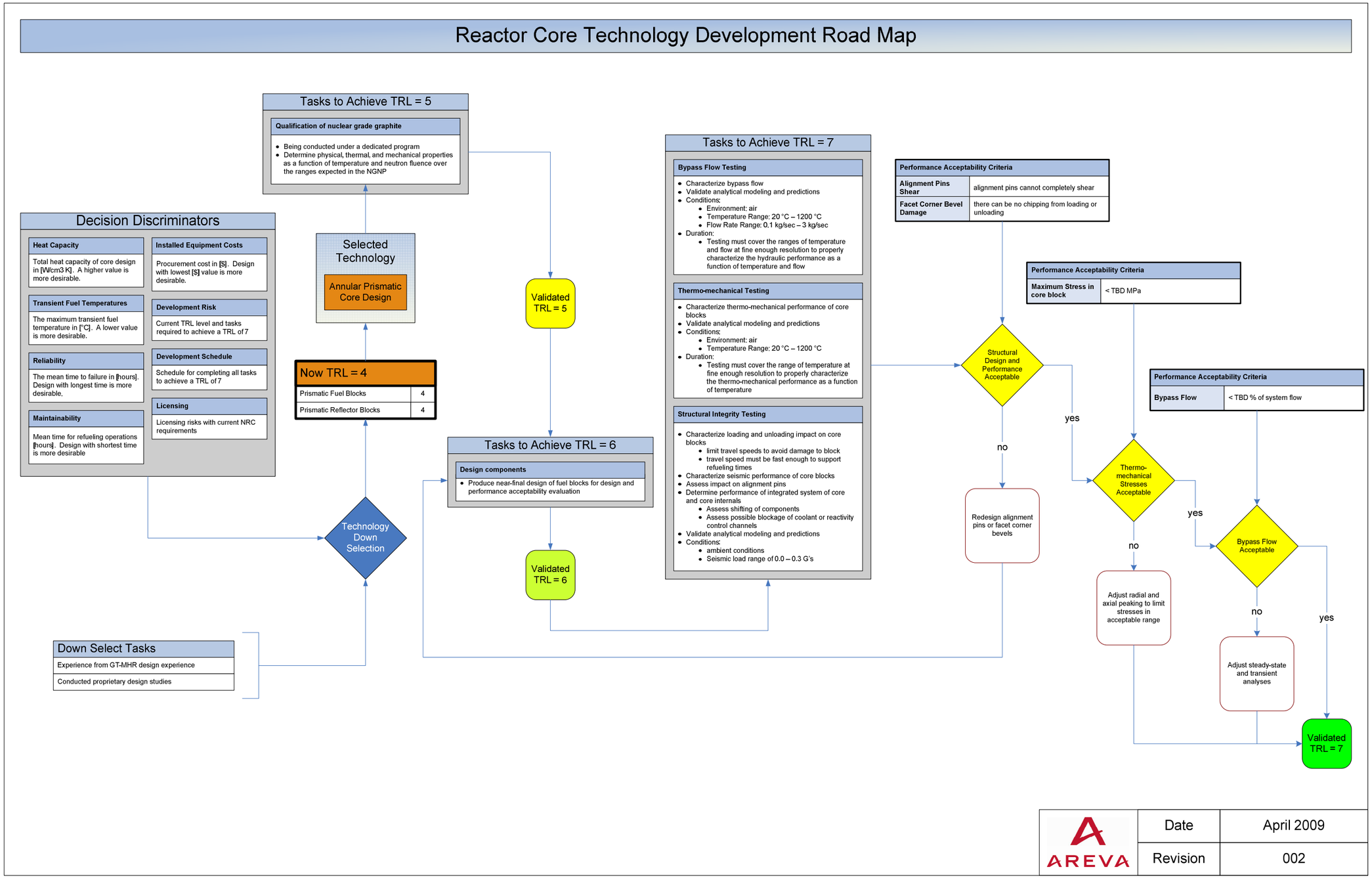

Figure K-2: Reactor Core Technology Development Road Map

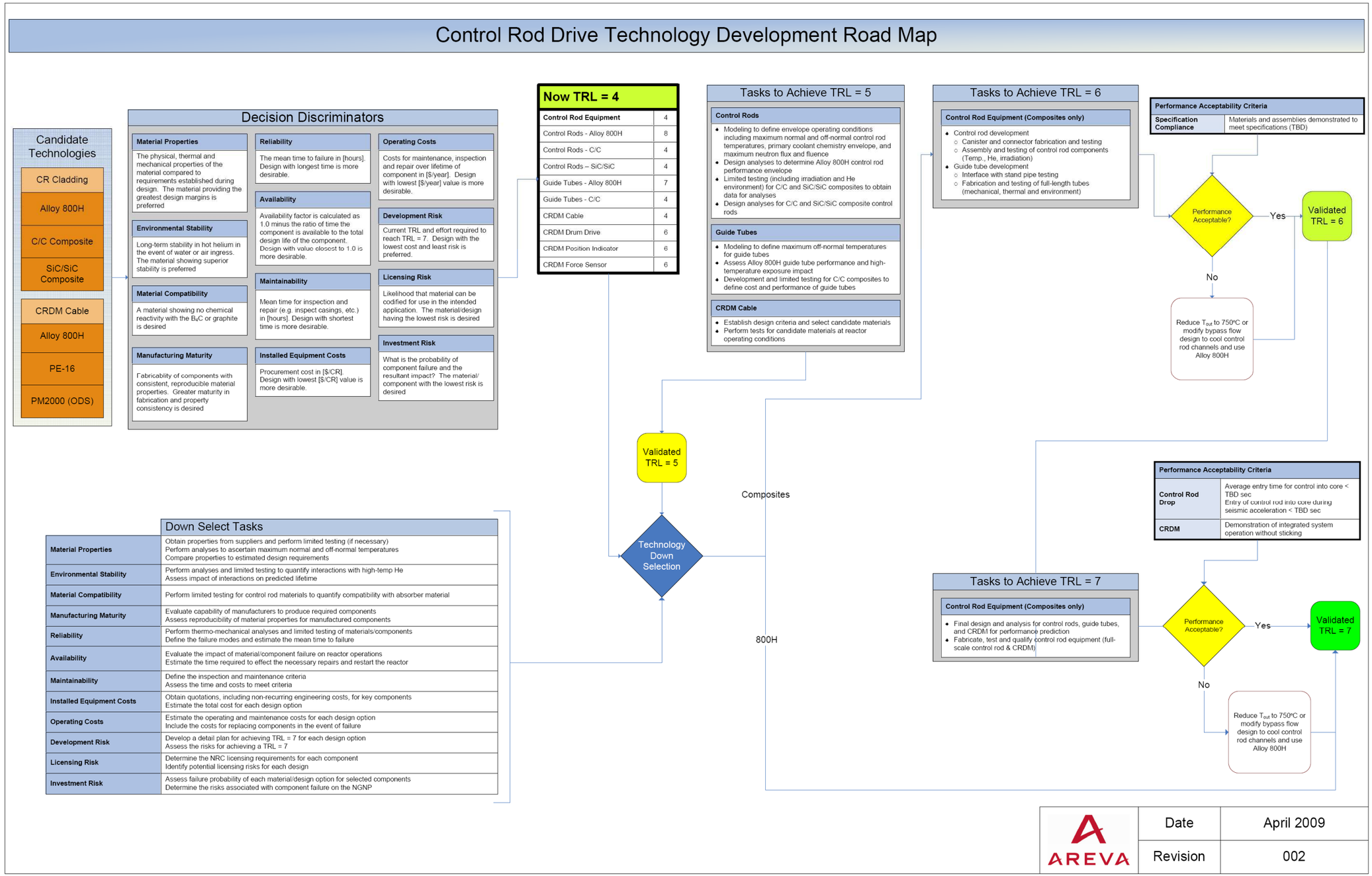

Figure K-3: Control Rod Drive Technology Development Road Map

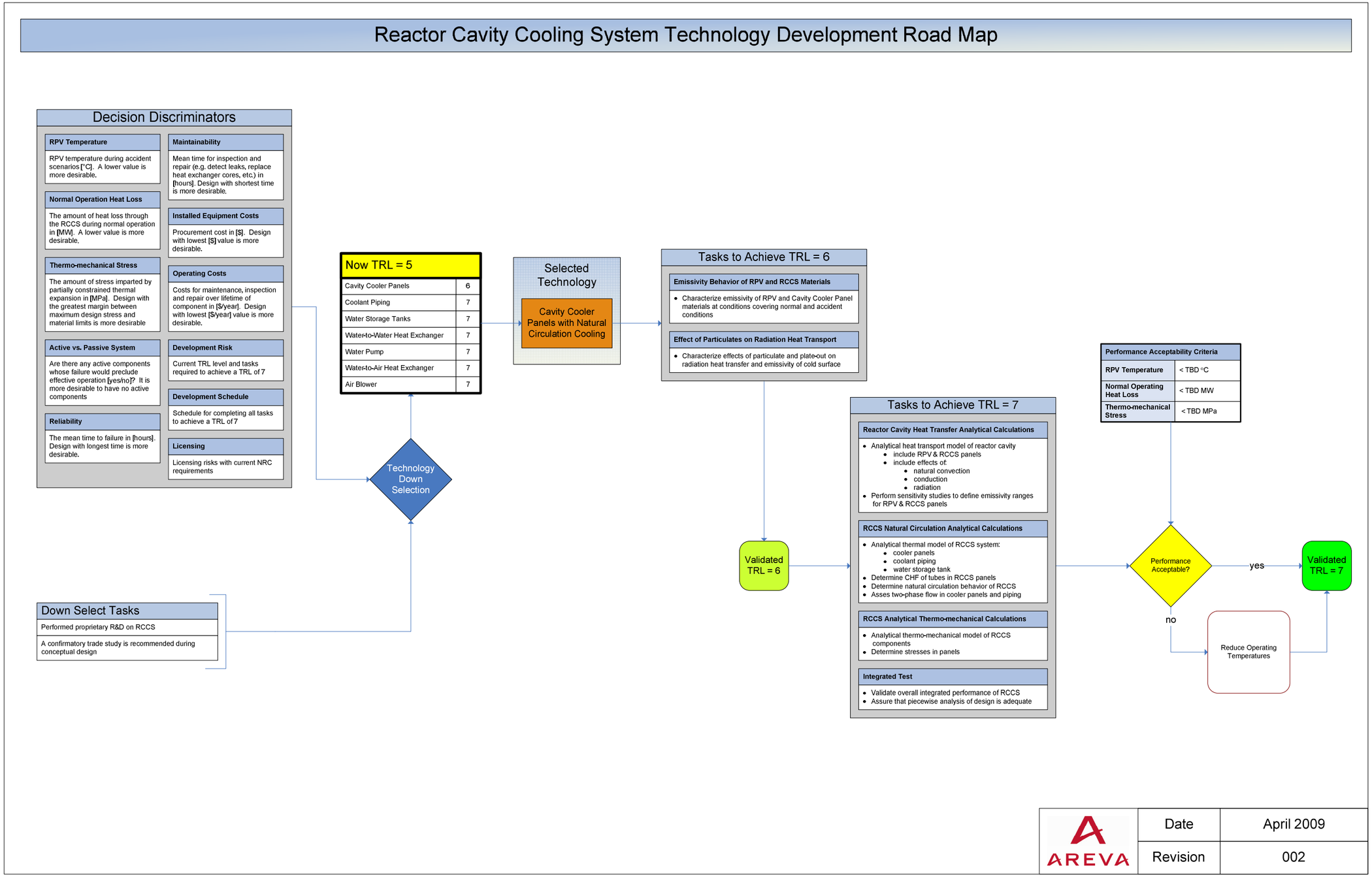

Figure K-4: Reactor Cavity Cooling System Technology Development Road Map

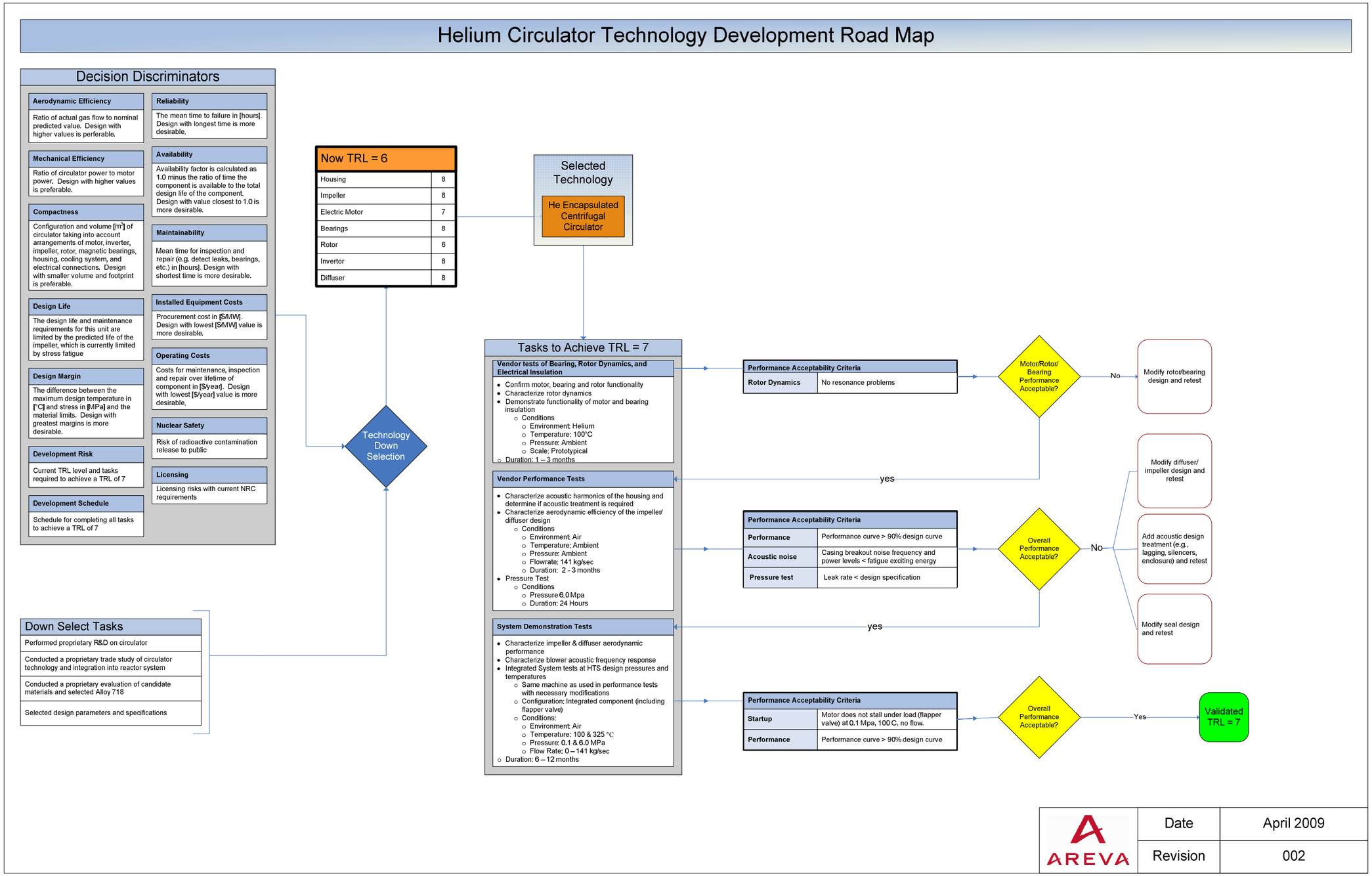

Figure K-5: Helium Circulator Technology Development Road Map

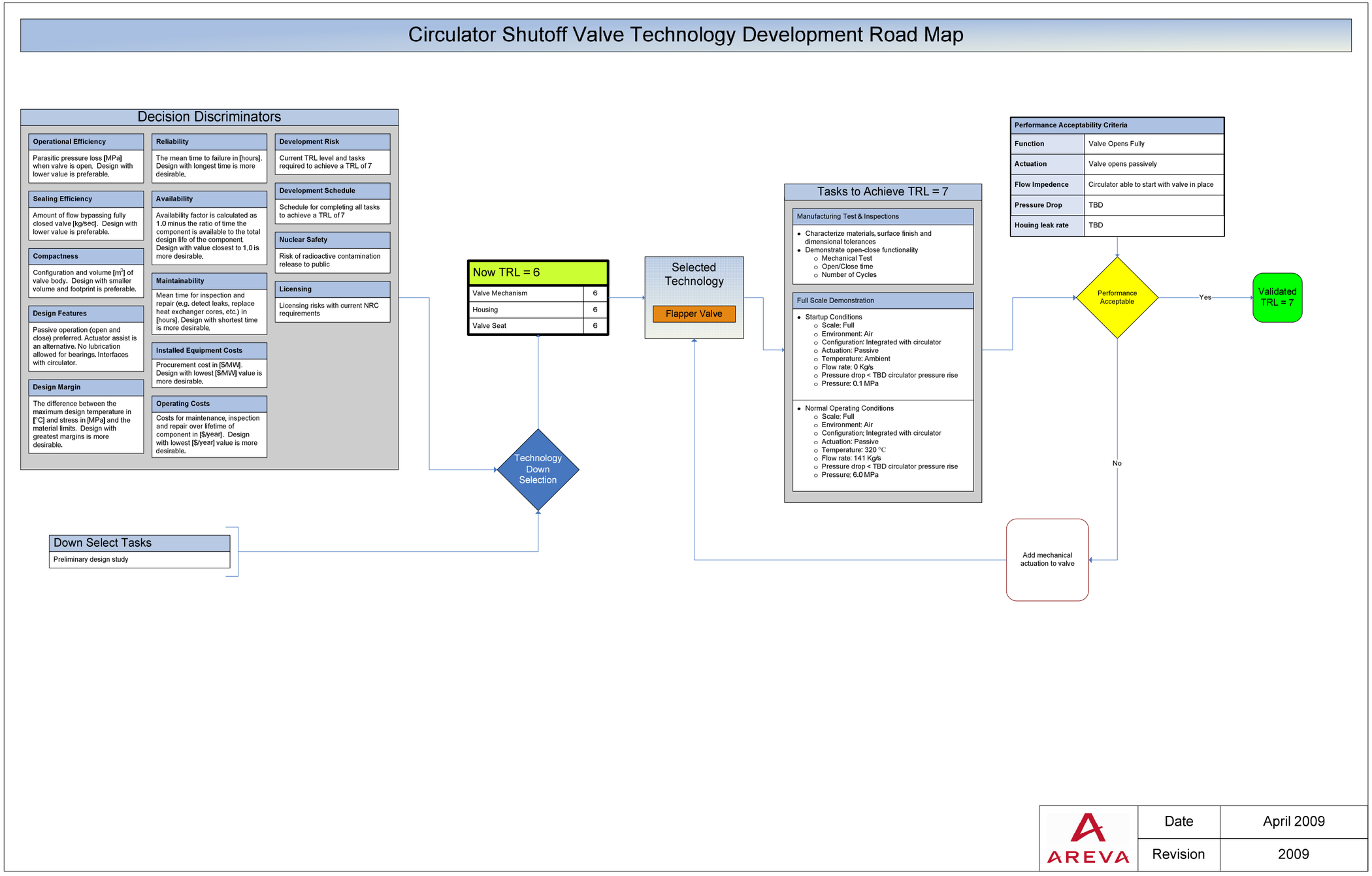

Figure K-6: Circulator Shutoff Valve Technology Development Road Map

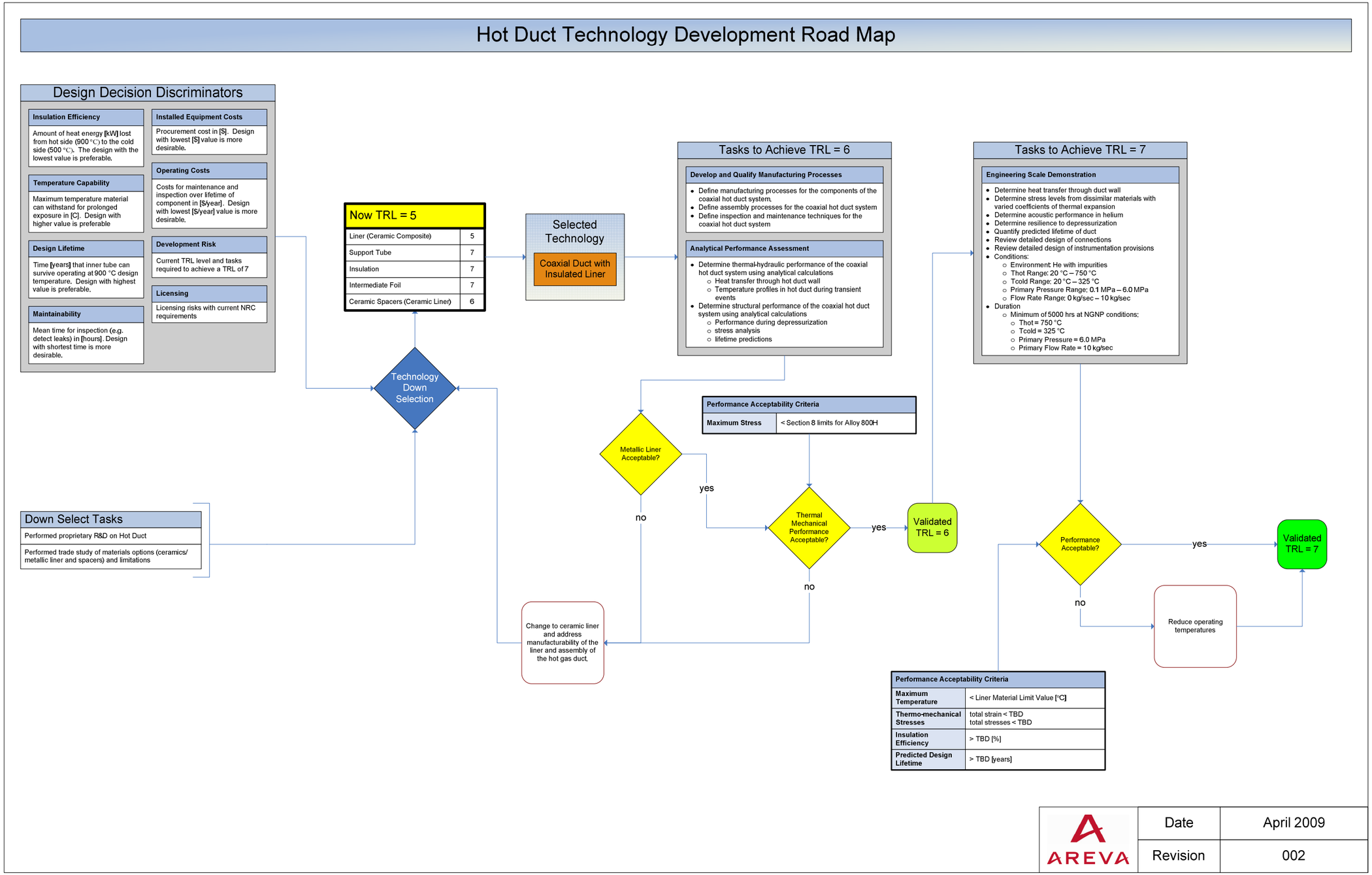

Figure K-7: Hot Duct Technology Development Road Map

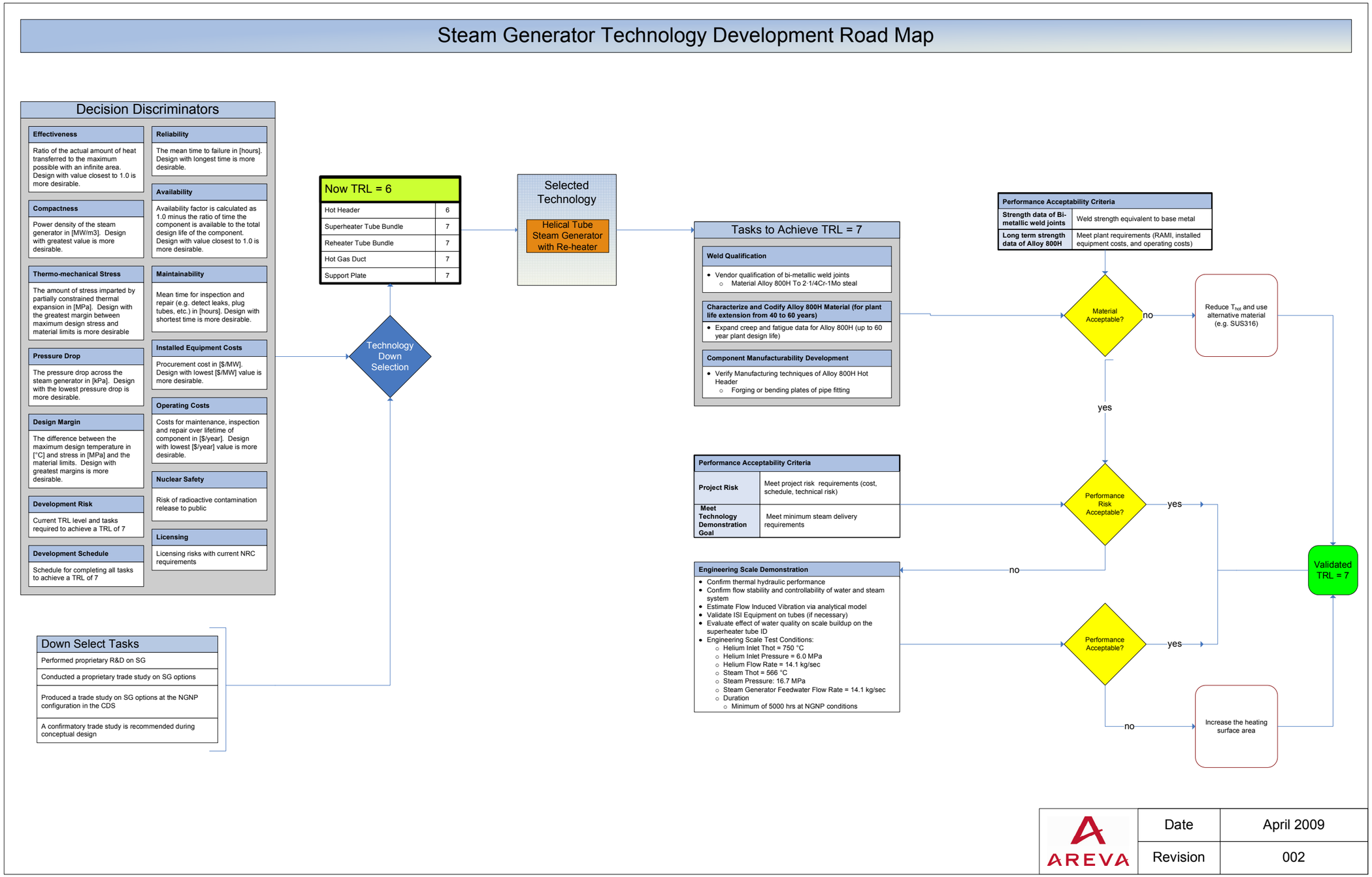

Figure K-8: Steam Generator Technology Development Road Map

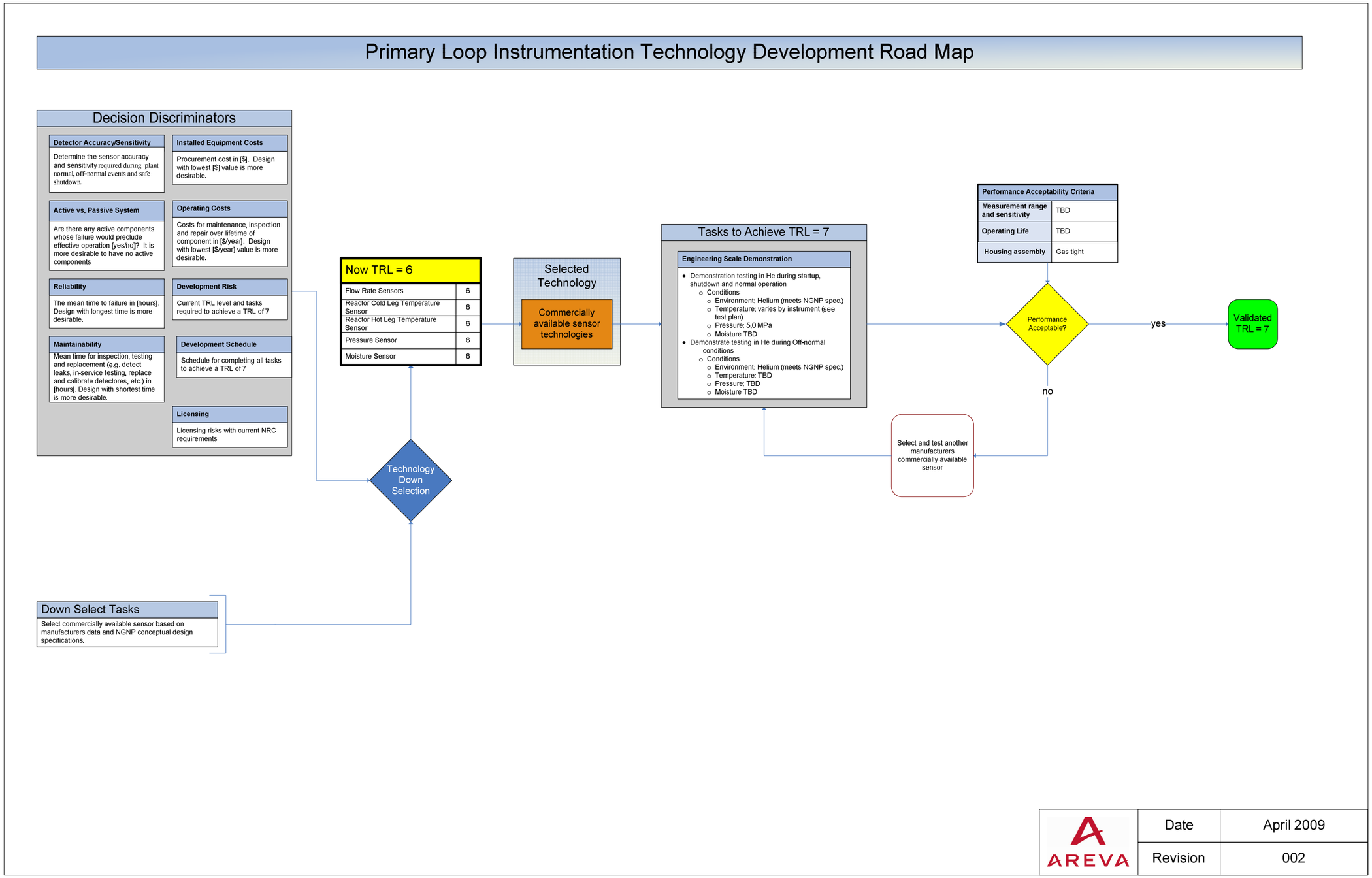

Figure K-9: Primary Loop Instrumentation Technology Development Road Map

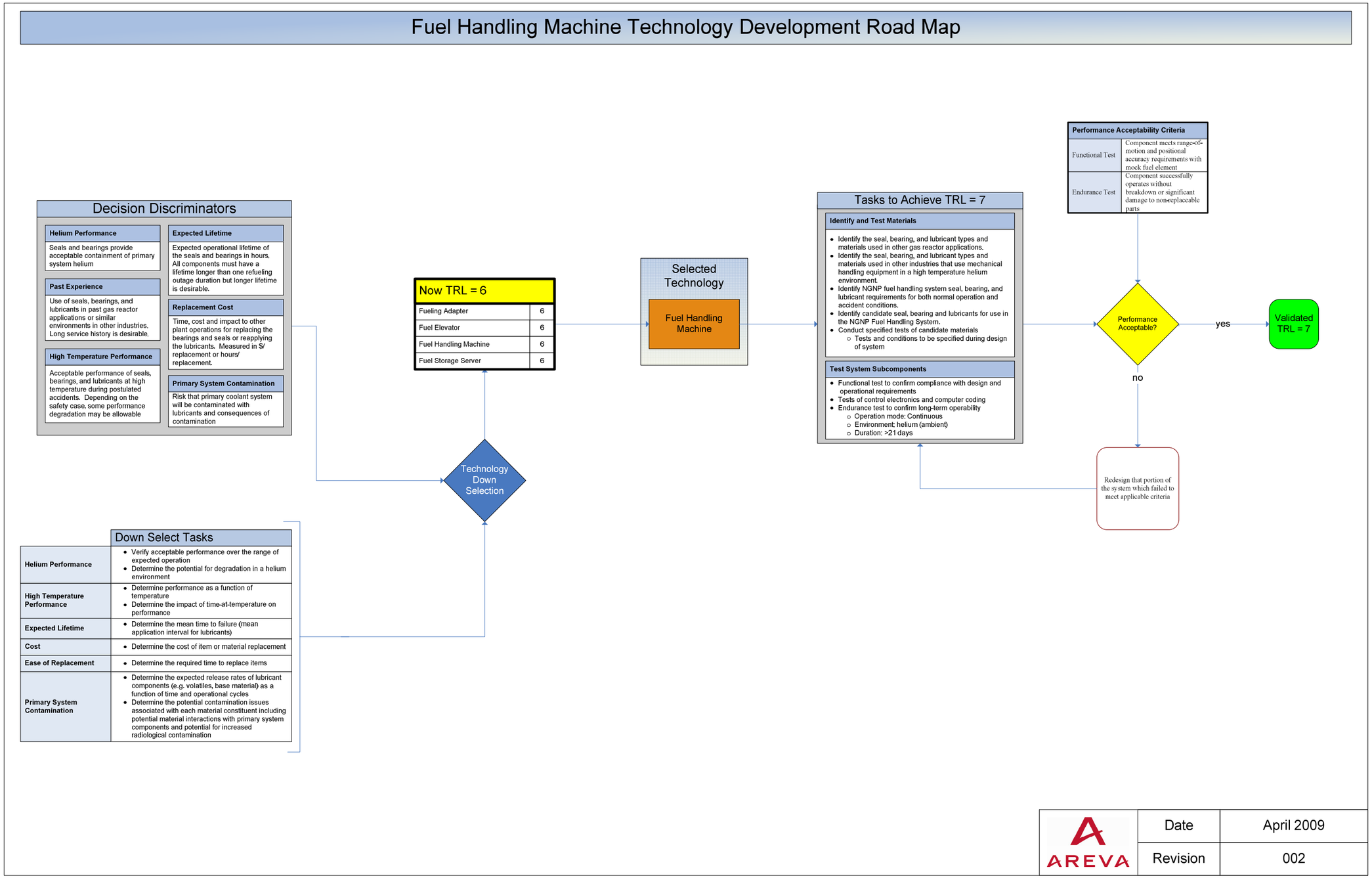

Figure K-10: Fuel Handling Machine Technology Development Road Map