Overview of NuScale Technology

J.N. Reyes

Chief Technology Officer

Presentation to:

Institute of Nuclear Energy Science and Technology
Idaho National Laboratory
February 21, 2012
Oregon State University, Corvallis, OR

NuScale Power

NuScale Power Module

- NSSS is Factory Built:
  - *Entire NSSS prefabricated and shipped by rail, truck or barge*
- Natural Circulation Cooling:
  - *Inherently safe – Eliminates major accident scenarios*
  - *Improves economics - Eliminates pumps, pipes, valves*
- Large natural heat sink
  - *Simplifies and enhances safety case*
- Proven Technology
- Below Ground
  - *Enhances security and safety*

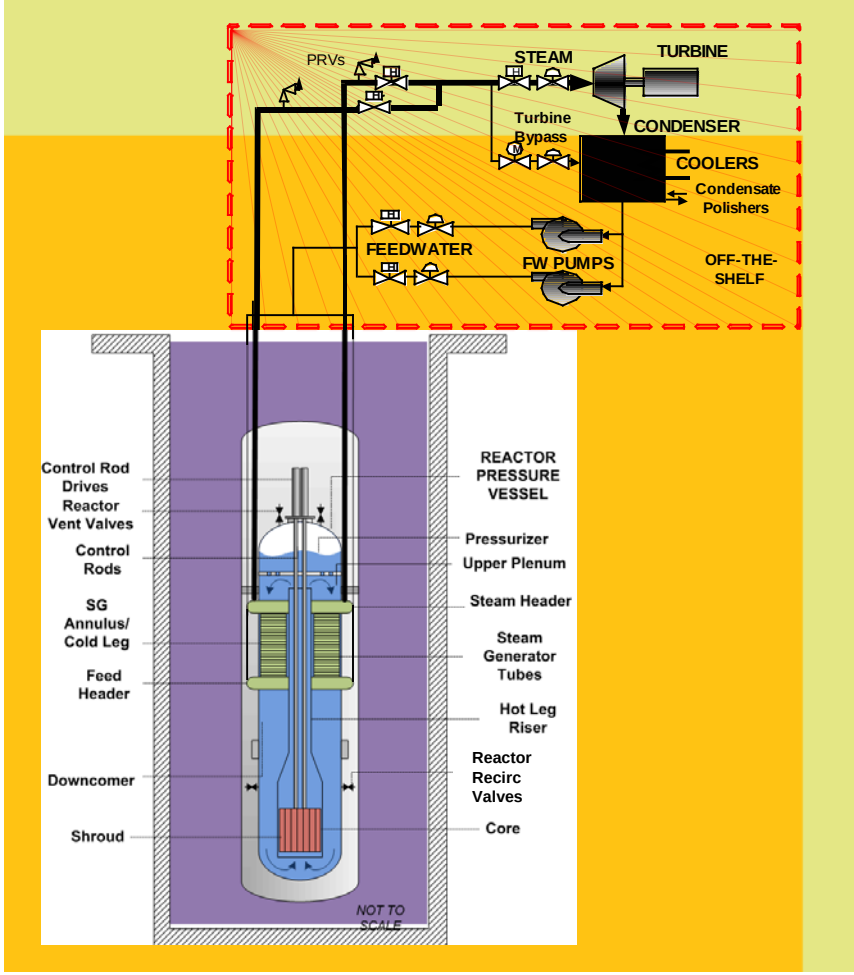

© 2011 NuScale Power, Inc.

NuScale Power

NSSS and Containment

© 2011 NuScale Power, Inc.

NuScale Power

Incremental build out minimizes risks; matches demand to load growth

Initial installment (270 MWe)

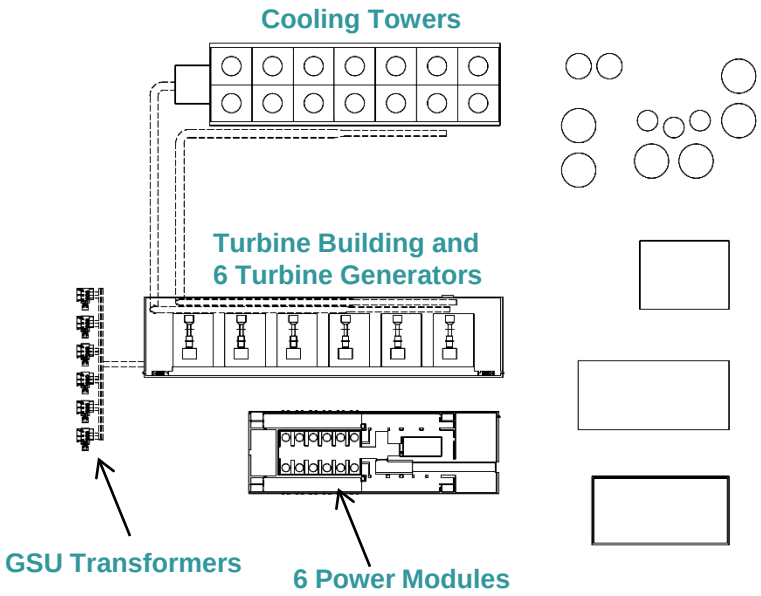

Final Installment (540 MWe)

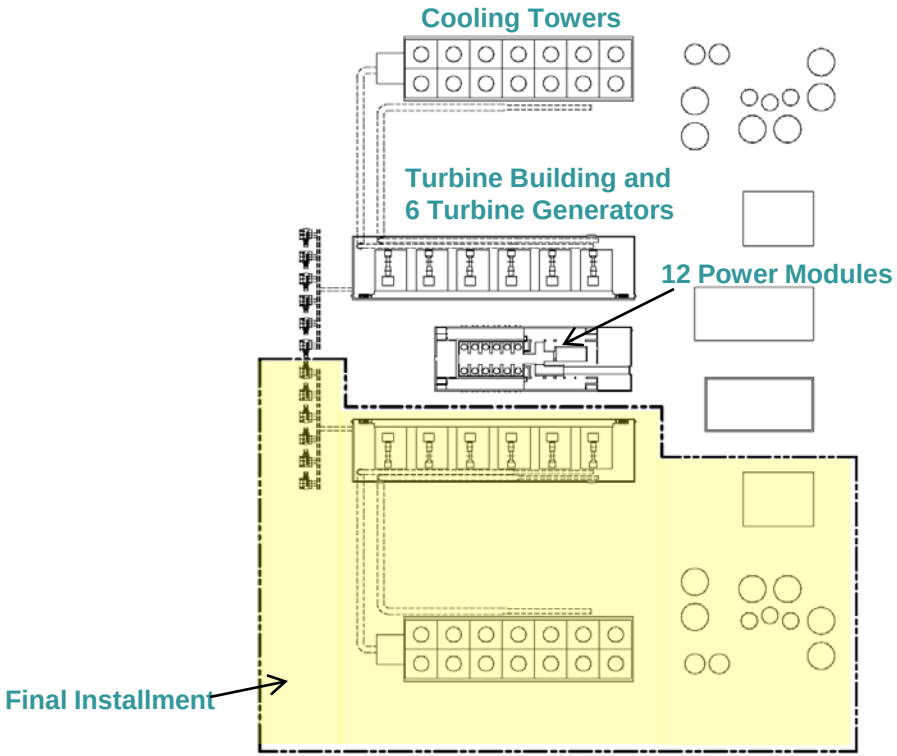

© 2011 NuScale Power, Inc.

NuScale Power

NuScale Site layout

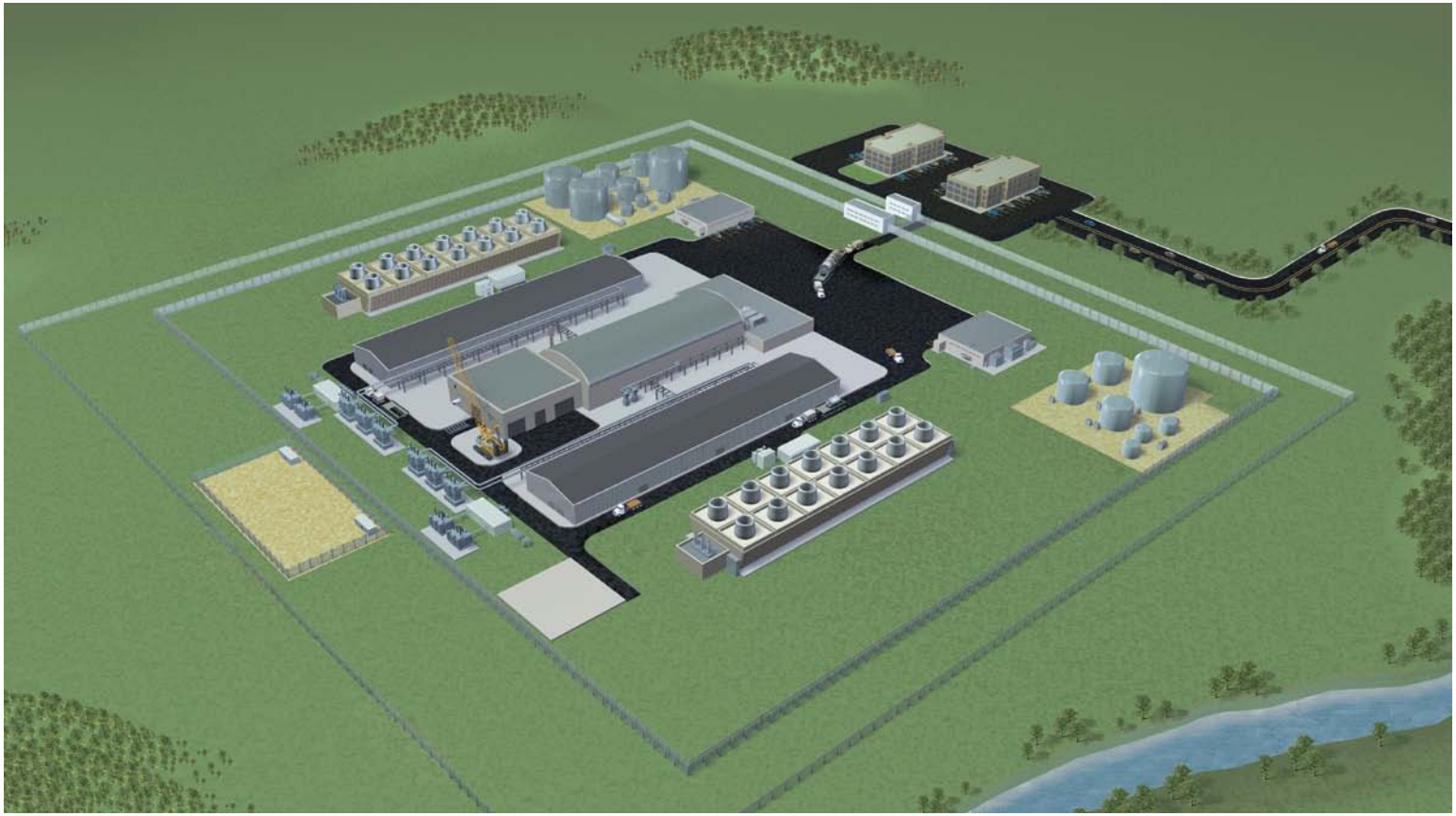

© 2011 NuScale Power, Inc.

NuScale Power

Passively Safe Reactor Modules

- **Natural Convection for Cooling**
  - Inherently safe natural circulation of water over the fuel driven by gravity
  - No pumps, no need for emergency generators
- **Seismically Robust**
  - System is submerged in a pool of water below ground in an earthquake resistant building
  - Reactor pool attenuates ground motion and dissipates energy
- **Simple and Small**
  - Reactor is 1/20th the size of large reactors
  - Integrated reactor design, no large-break loss-of-coolant accidents
- **Defense-in-Depth**
  - Multiple additional barriers to protect against the release of radiation to the environment

45 MWe Reactor Module

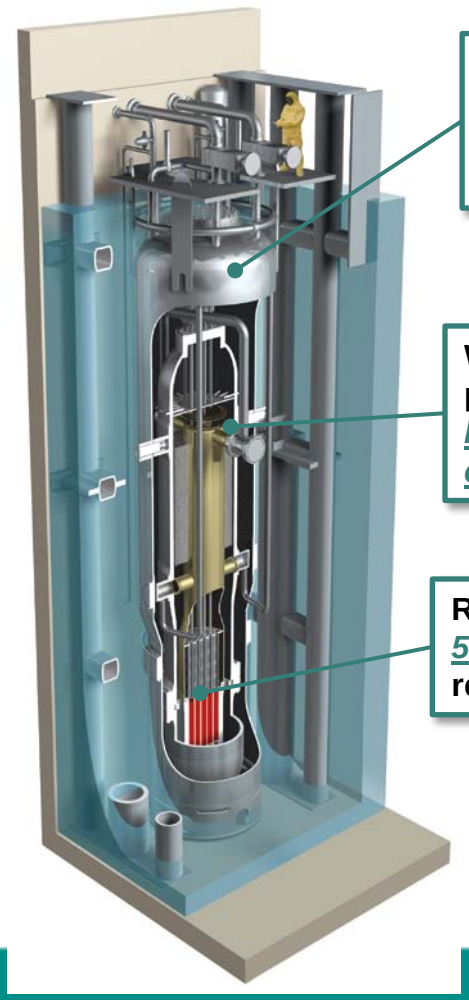

High-strength stainless steel containment *10 times stronger* than typical PWR

Water volume to thermal power ratio is *4 times larger resulting in better cooling*

Reactor core has *only 5% of the fuel* of a large reactor

© 2011 NuScale Power, Inc.

NuScale Power

Large Pool of Water Holds Reactor Modules

NuScale nuclear power reactors are housed inside ***high strength steel containment vessels*** and submerged in 4 million gallons of water below ground level inside the Reactor Building.

The Reactor Building is ***designed to withstand earthquakes, floods, tornados, hurricane force winds, and aircraft impacts.***

12-module, 540 MWe NuScale Plant

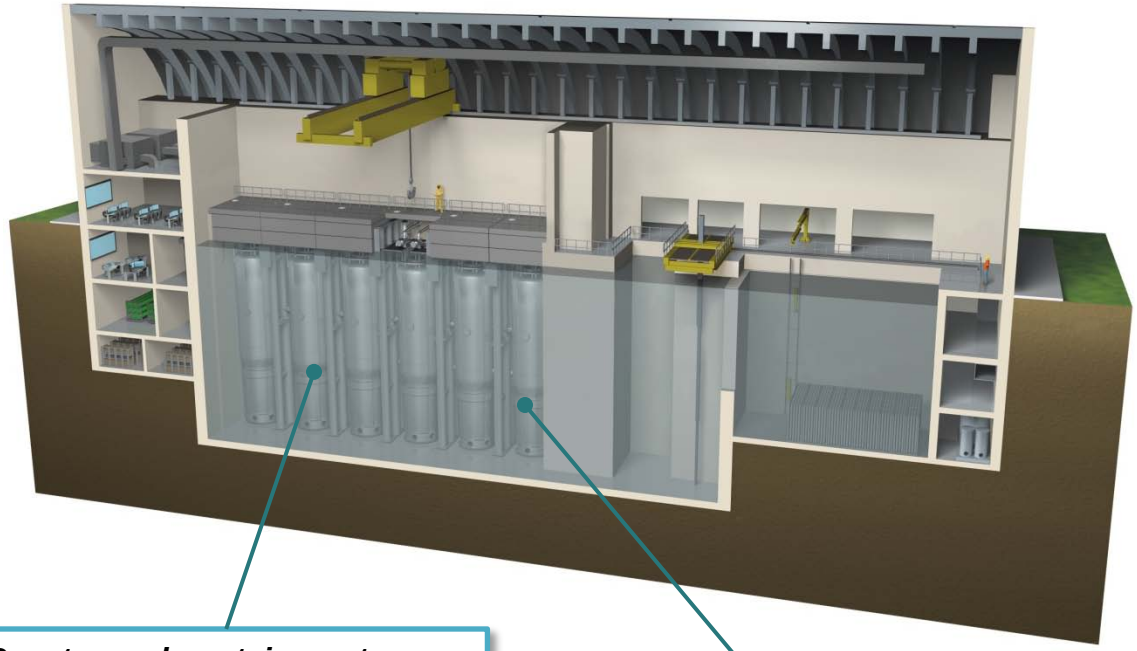

Reactor and containment are submerged in underground steel-lined concrete pool with 30-day supply of cooling water.

Any hydrogen released is trapped in containment vessel with little to no oxygen available to create a combustible mixture.

© 2011 NuScale Power, Inc.

NuScale Power

High pressure containment

- Pressure Capability - Equilibrium pressure between reactor and containment following any LOCA is always below containment design pressure
- Insulating Vacuum
  - Significantly reduces convection heat transfer during normal operation
  - No insulation on reactor vessel. ELIMINATES SUMP SCREEN BLOCKAGE ISSUE (GSI-191)
  - Improves steam condensation rates during a LOCA by eliminating air
  - Prevents combustible hydrogen mixture in the unlikely event of a severe accident (i.e., little or no oxygen)
  - Eliminates corrosion and humidity problems inside containment

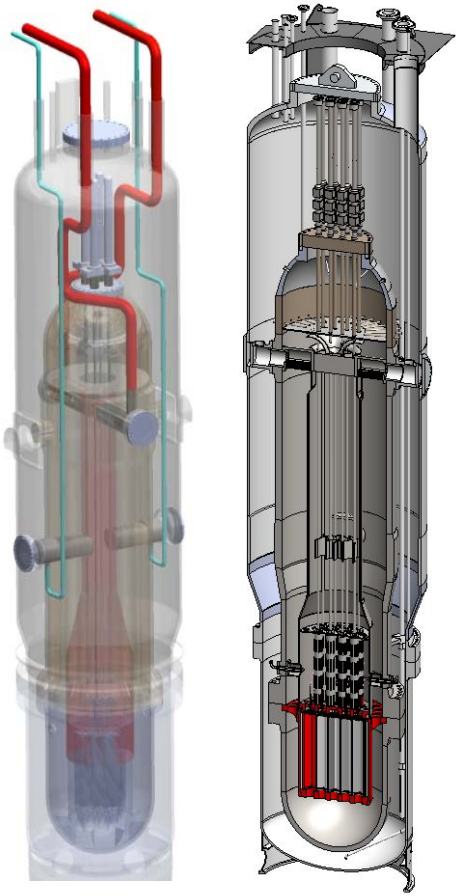

© 2011 NuScale Power, Inc.

NuScale Power

Decay Heat Removal System

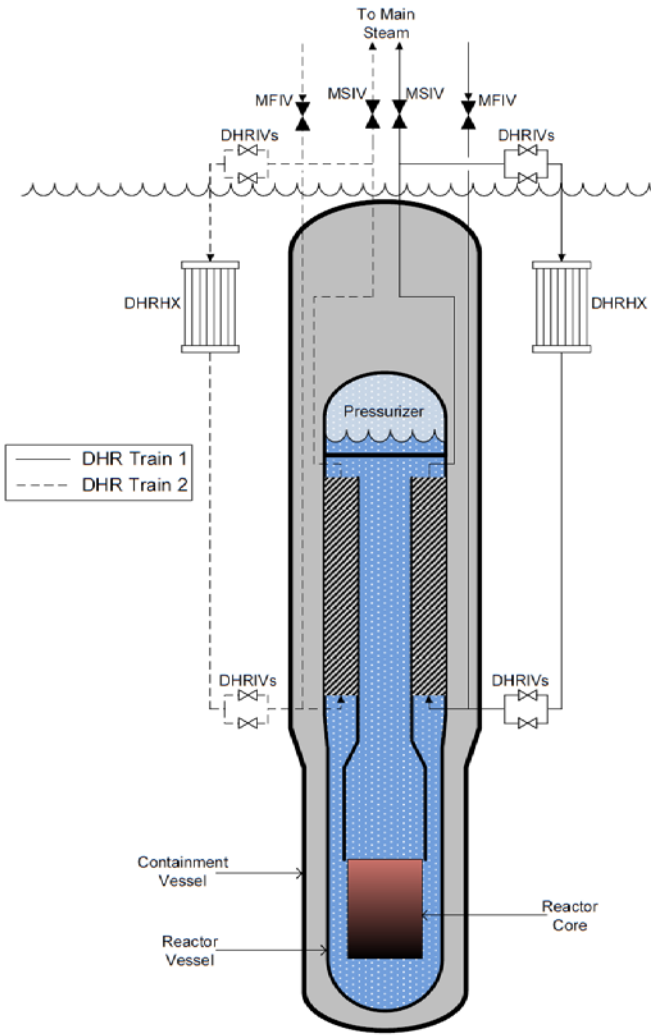

- Two independent single-failure-proof trains
- Closed loop system
- Two-phase natural circulation operation
- DHRS heat exchangers nominally full of water
- Supplies the coolant inventory
- Primary coolant natural circulation is maintained
- Pool provides a 3 day cooling supply for decay heat removal

© 2011 NuScale Power, Inc.

NuScale Power

Decay heat removal using the containment

- Provides a means of removing core decay heat and limits containment pressure by:
  - Steam Condensation
  - Convective Heat Transfer
  - Heat Conduction
  - Sump Recirculation
- Reactor Vessel steam is vented through the reactor vent valves (flow limiter)
- Steam condenses on containment
- Condensate collects in lower containment region
- Reactor Recirculation Valves open to provide recirculation path through the core
- Provides +30 day cooling followed by indefinite period of air cooling.

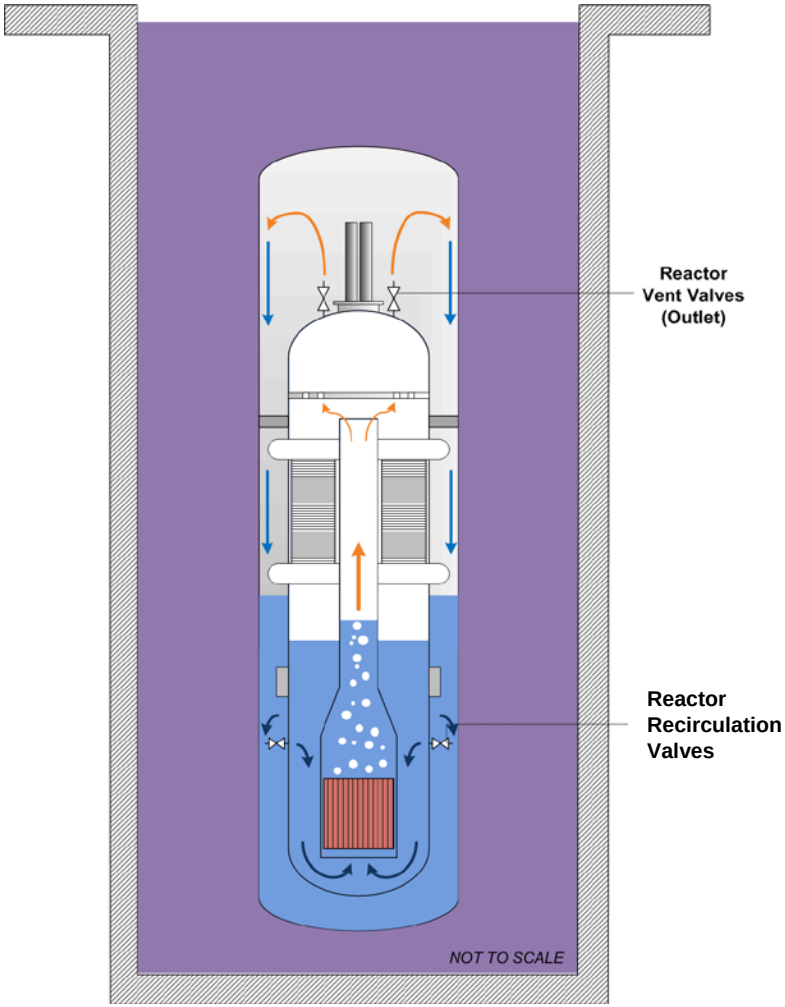

© 2011 NuScale Power, Inc.

NuScale Power

Stable Long Term Cooling

Reactor and nuclear fuel cooled indefinitely without pumps or power

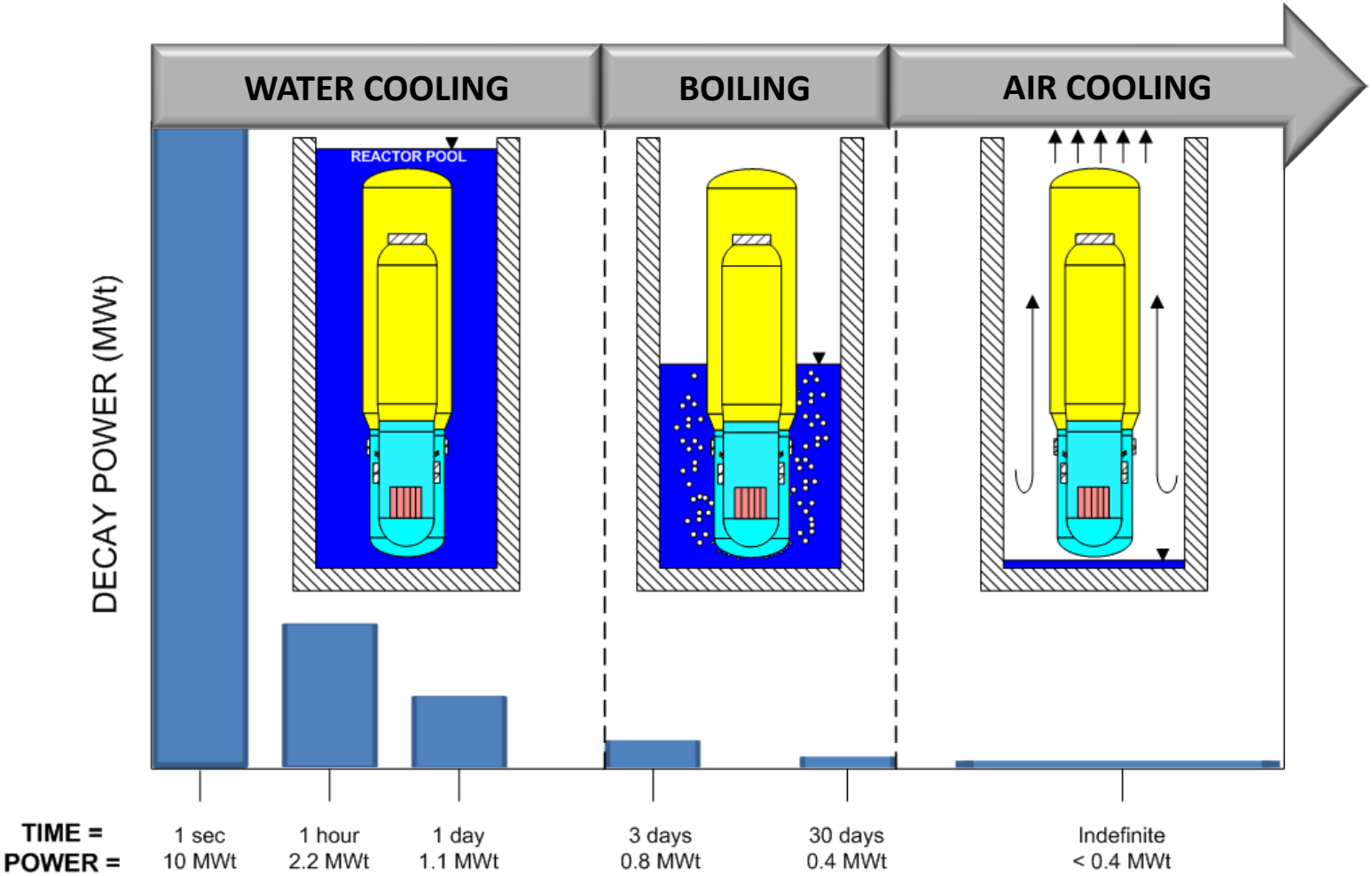

© 2011 NuScale Power, Inc.

NuScale Power

Spent Fuel Pool Safety

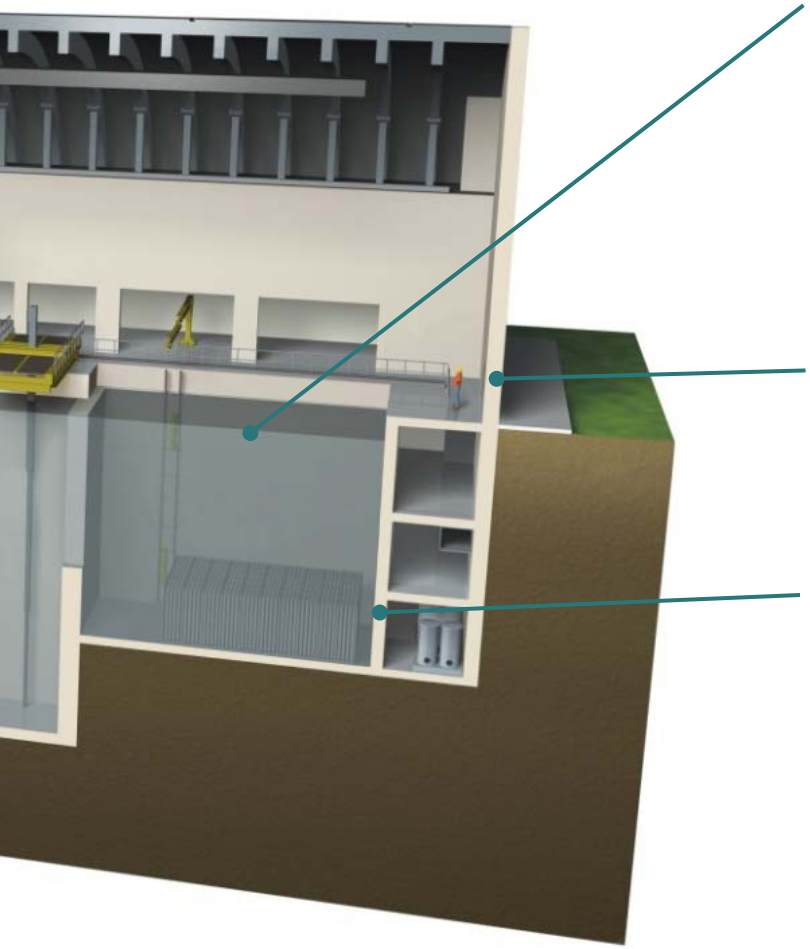

Increased Cooling Capacity

- ***More water volume for cooling per fuel assembly*** than current designs
- Redundant, cross-connected reactor and refueling pool heat exchangers provide full back-up cooling to spent fuel pool.

External Coolant Supply Connections

- Auxiliary ***external water supply connections are easily accessible*** to plant personnel and away from potential high radiation zones (current problem in Japan)

Below Ground, Robust Deep-Earth Structure.

- Below ground spent fuel pool is housed in a ***seismically robust reactor building***
- Stainless steel refueling ***pool liners are independent from concrete structure to retain integrity***
- Pool wall located underground is ***shielded from tsunami wave impact and damage***
- ***Construction of structure below ground in engineered soil limits the potential for any leakage***

© 2011 NuScale Power, Inc.

NuScale Power

Comparison of NuScale to Fukushima-Type Plant

Fukushima	NuScale Plant
Reactor and Containment	
Safety Emergency Diesel Generators Required	Safety Emergency Diesel Generators Not Required
External Supply of Water Required	Containment immersed in 30 day supply of water
Coolant Supply Pumps Required	Not Required
Forced flow of water required for long term cooling	Long term (Beyond 30 days) cooling by natural convection to air
Spent Fuel Pool	
Water Cooling of Spent Fuel	Extended Cooling Capability *4 times the water of conventional spent fuel pools per MW power*
Elevated Spent Fuel Pool	Deeply Embedded Spent Fuel Pool
Limited Access to Back-up Supply of Water	Accessible Back-up Supplies of Water

© 2011 NuScale Power, Inc.

NuScale Power

Core damage frequency significantly reduced

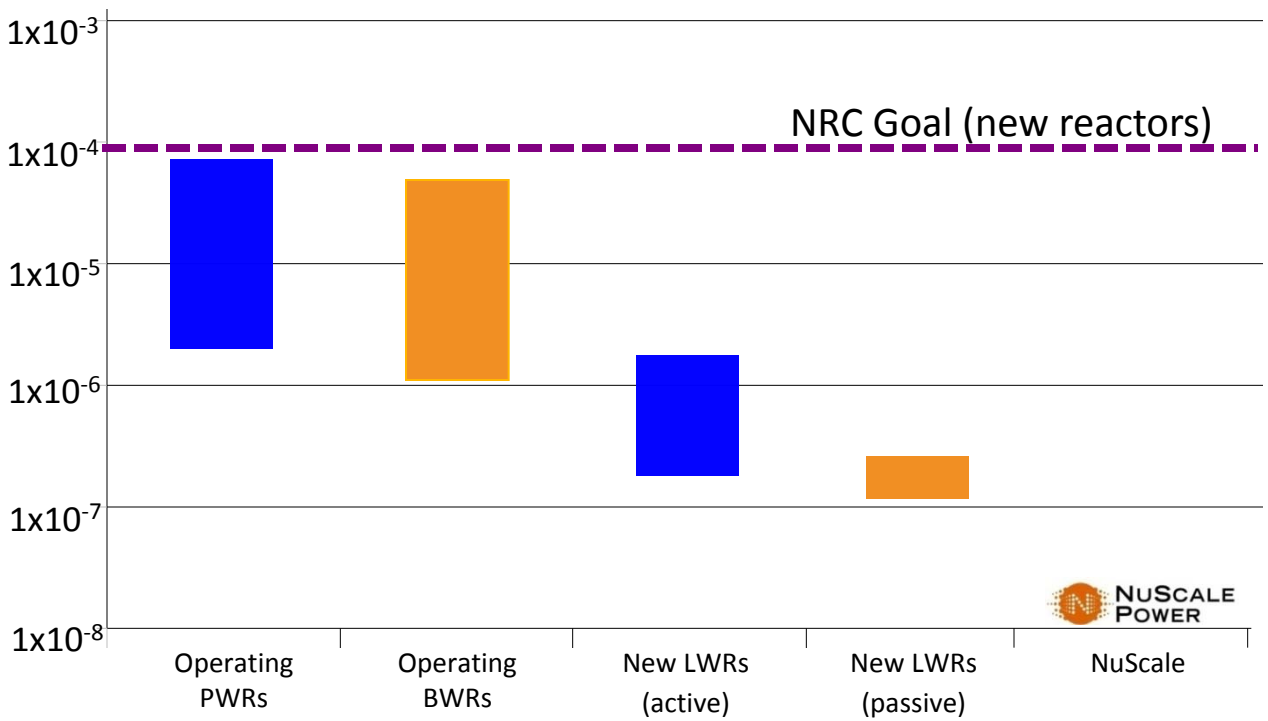

Source: NRC White Paper, D. Dube; basis for discussion at 2/18/09 public meeting –on implementation of risk matrices for new nuclear reactors

© 2011 NuScale Power, Inc.

NuScale Power

Added Barriers Between Fuel and Environment

Conventional Designs

1. Fuel Pellet and Cladding
2. Reactor Vessel
3. Containment

NuScale's Additional Barriers

4. Water in Reactor Pool (4 million gallons)
5. Stainless Steel Lined Concrete Reactor Pool
6. Biological Shield Covers Each Reactor
7. Reactor Building

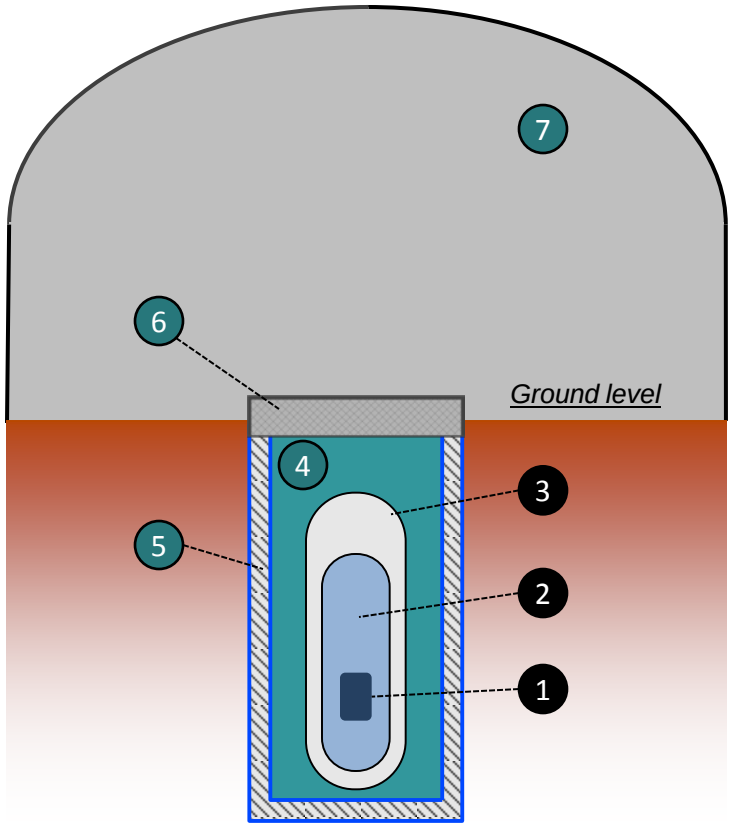

© 2011 NuScale Power, Inc.

NuScale Power

NuScale Integral System Test Facility

- Q/A Program in place at OSU
- Initial shakedown tests completed.
- IAEA international standard problem test completed.
- Test Facility Scaling Report sent to NRC - 12/10
- NuScale Modifications began January 2010
- NRC Certification Testing begins in 2011.

© 2011 NuScale Power, Inc.

NuScale Power

NUSCALE INTEGRAL TEST FACILITY

Scaled Integrated Reactor Facility

- 1:3 Height and length scale
- 1:254.7 Volume scale
- High pressure / temperature operation
- Two Reactor Vent Valves (RVV)
- Two Reactor Recirculation Valves (RRV)
- Helical coil steam generator

Data Acquisition System (DAS)

- KEPServerEx OPC sever
- Kepware data logger
- Parallel & Independent operation from control system

Facility Control System

- Standardized industrial software
- Programmable logic controls match system logic

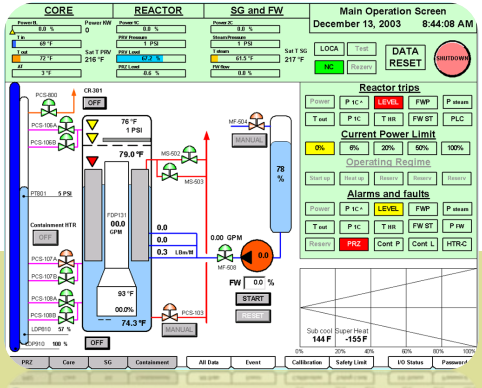

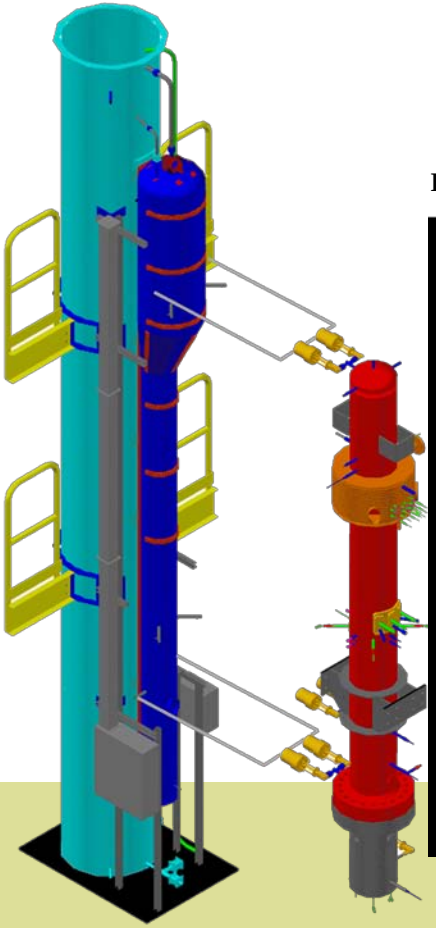

Shakedown and Operational Testing

- Verify and Validate Data Acquisition System
- Verify instrumentation operability and performance
- Assessment of test facility performance
- Validate computer models of facility performance

Design Basis Accident Testing

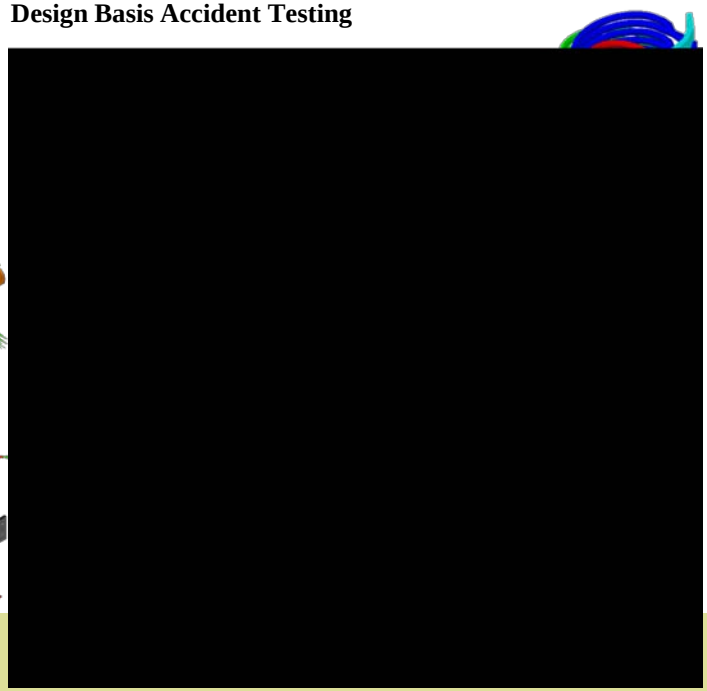

Engineering Simulator Completed - Full Scope Main Control Room Simulator for HFE/HMI Studies under Development

© 2011 NuScale Power, Inc.

NuScale Power

Conclusions

- The NuScale design offers a new paradigm for the deployment and operation of a nuclear power plant.
  - Smaller Size
  - Scalability
  - Modular on-site construction in parallel with offsite factory fabrication of NSSS and Containment
  - Staggered refueling
- The NuScale passive safety systems will offer a new level of safety in response to extreme events; particularly prolonged station blackout.

© 2011 NuScale Power, Inc.

NuScale Power

1000 NE Circle Blvd, Suite 10310
Corvallis, OR 97330
541-207-3931
http://www.nuscalepower.com

© 2011 NuScale Power, Inc.