Dr. Akira Tokuhiro
University of Idaho
College of Engineering

Potential Characterization and Operation of Hybrid Heat Transport & Energy Conversion Systems Using Intelligent Control

Center for Advanced Energy Studies

Hybrid Energy Systems Workshop 2012, Salt Lake City

A. Tokuhiro, April 4, 2012

S. Cosgrove, graphic designer

SELLING AN IDEA

- Potential application of intelligent control system in HES
- Preliminary results
- Government and industry collaborations in HES, ICS

http://www.google.com/imgres?um=1&hl=en&sa=N&rlz=1T4ADFA_enUS341US342&biw=1280&bih=545&tbm=isch&tbnid=lu1Xava-hkewfM:&imgrefurl=http://pugetsoundblogs.com/peninsular-thinking/2011/02/02/as-seen-in-bremerton-a-ford-pinto/&docid=Qu3BU6LAMtcSqM&imgurl=http://pugetsoundblogs.com/peninsular-thinking/files/2011/02/FordPinto1971.jpg&w=1024&h=768&ei=b7t0T4G5EsPjiAKWlvAw&zoom=1&iact=hc&vpx=510&vpy=233&dur=1867&hovh=194&hovw=259&tx=105&ty=136&sig=105981016176042909948&page=1&tbnh=148&tbnw=197&start=0&ndsp=10&ved=1t:429,r:7,s:0
http://www.google.com/imgres?q=amc+gremlin&um=1&hl=en&sa=N&qscrl=1&nord=1&rlz=1T4ADFA_enUS341US342&biw=1280&bih=545&tbm=isch&tbnid=wbiMCgvVqDHvVM:&imgrefurl=http://www.cartype.com/pages/1881/amc_gremlin__1970&docid=oG8PsbeiPtlnrM&imgurl=http://www.cartype.com/pics/1158/full/amc_gremlin_side_74.jpg&w=1280&h=969&ei=97t0T61e0tyIAo6L2VM&zoom=1&iact=hc&vpx=931&vpy=191&dur=2004&hovh=195&hovw=258&tx=107&ty=104&sig=105981016176042909948&page=1&tbnh=150&tbnw=187&start=0&ndsp=11&ved=1t:429,r:5,s:0
http://www.google.com/imgres?q=amc+pacer&hl=en&biw=1280&bih=545&gbv=2&tbm=isch&tbnid=iwNALc-jmW-c4M:&imgrefurl=http://www.thetruthaboutcars.com/2010/02/curbside-classic-1975-amc-pacer-x/&docid=UnUcE-Vr0DR6OM&imgurl=http://images.thetruthaboutcars.com/2010/02/CC-48-049-800.jpg&w=800&h=451&ei=hIV4T8zBCMfM2AXC_oi2Bg&zoom=1&iact=hc&vpx=900&vpy=205&dur=1636&hovh=168&hovw=299&tx=119&ty=97&sig=101489556313553931880&page=1&tbnh=117&tbnw=207&start=0&ndsp=10&ved=1t:429,r:4,s:0

Connecting 'Dots'

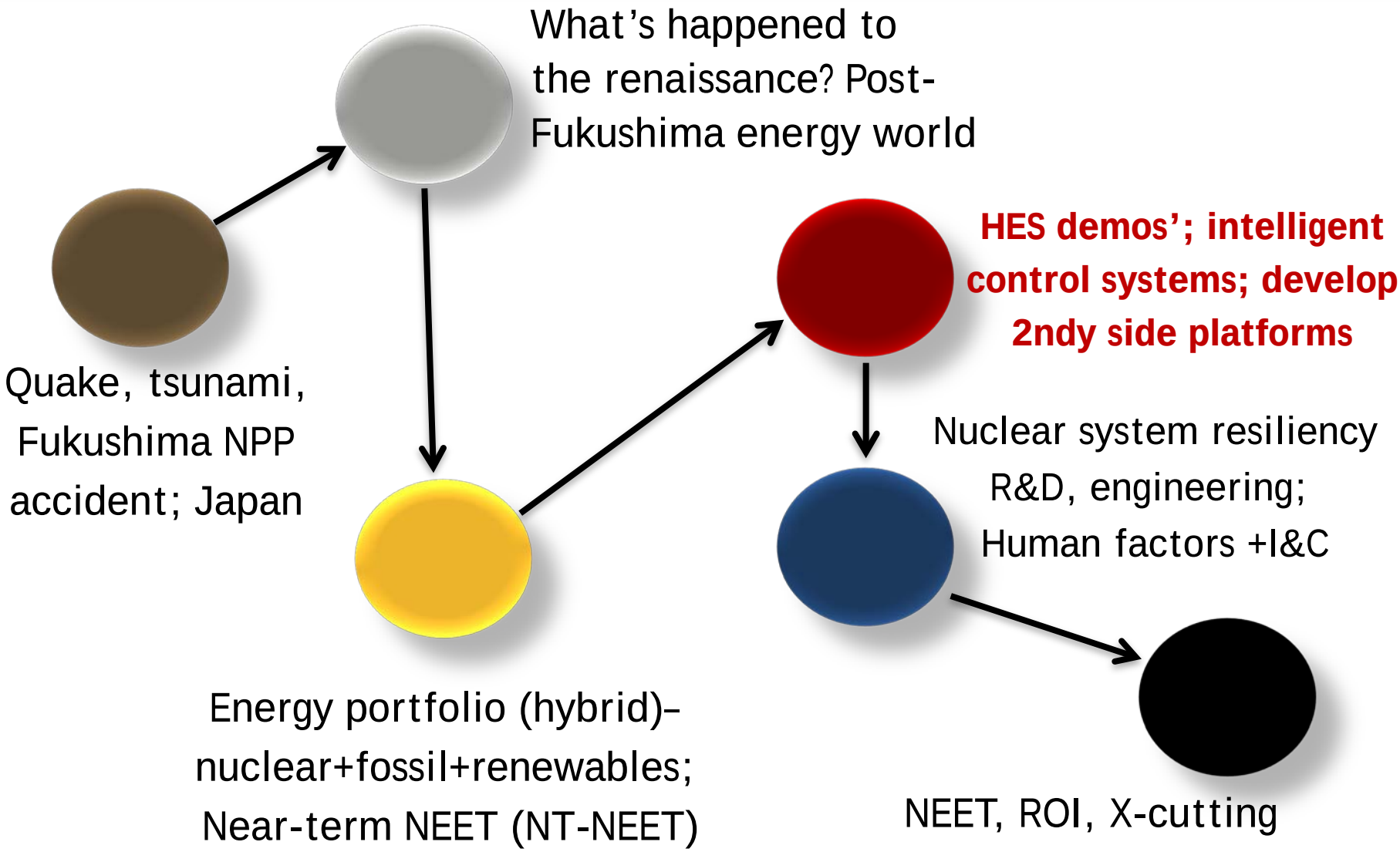

Challenges -real vs. models/simulation

- Funding; ‘change is the only constant’; so dynamics!
- Primary, secondary, grid-systems are linked/coupled; LENDIT-metric scaling distortions apparent
- Primary system itself is coupled (CNTH); secondary system is coupled via multiple components
- Modeling/simulations of non-linear dynamics contains uncertainties
- Challenge is characterizing non-linear dynamics, system dynamics in real engineered systems
- Real components may perform ideally/as anticipated when assumptions are valid; when ‘not’ valid, they behave not as predicted; fluctuations are normal/expected in real (thermal) components

Prototypic 2-unit NGNP with electricity generation, chemical plant, energy storage

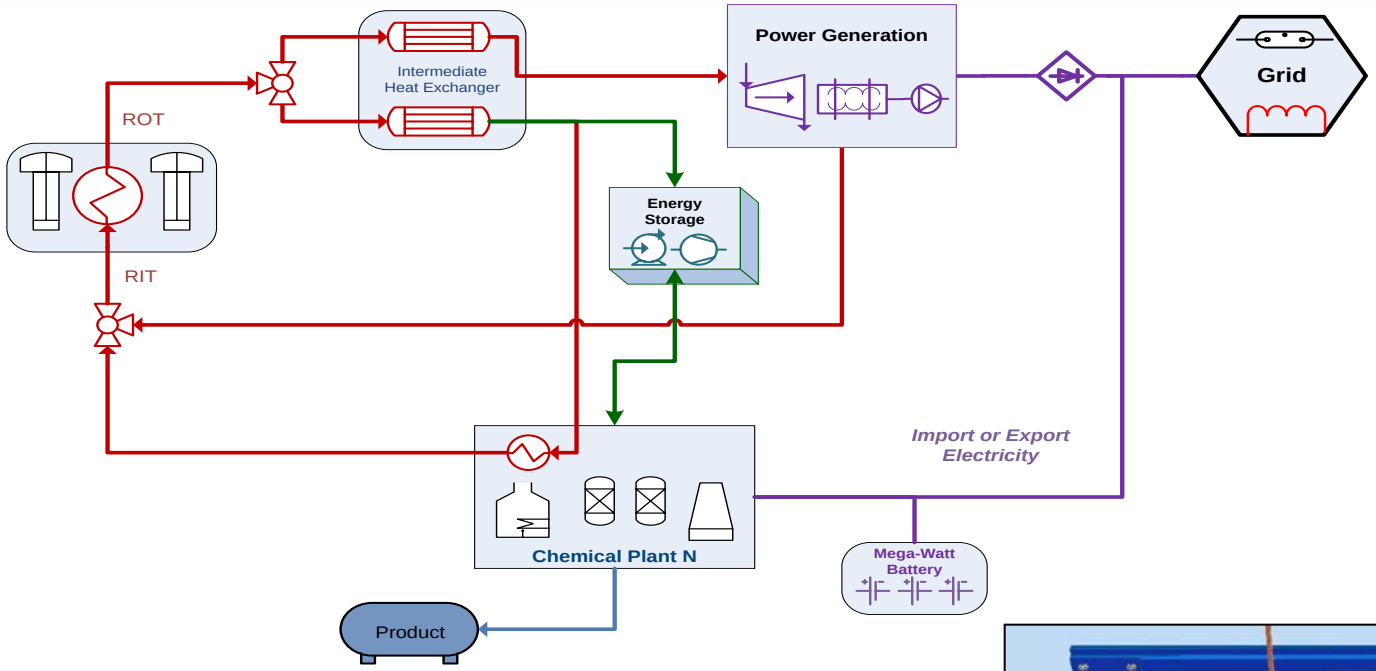

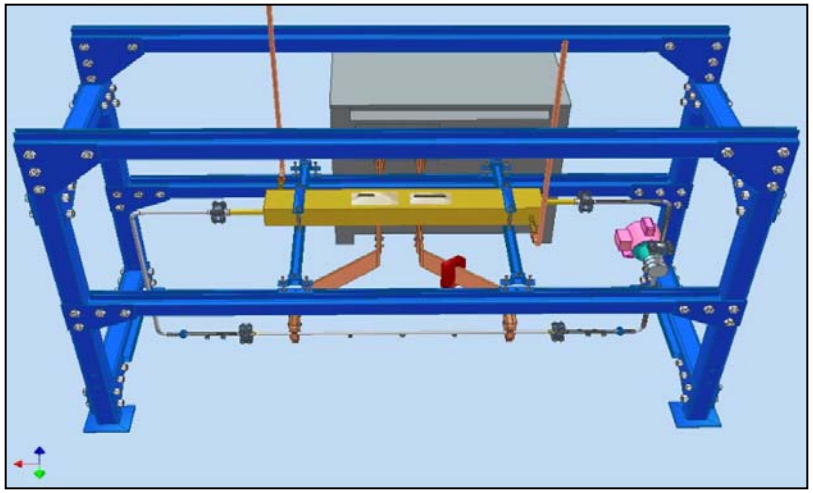

- Because physically-connected components define sub-systems and systems, dynamic behavior in one component impacts system dynamics
- Expect non-linearity

Prototypic behavior of thermal components

Experimental data vs. an ANN 'EBaLM' architecture-based model for PCHE using SCO2. Shows local heat transfer (L) & hot-side pressure drop (Ridluan, 2009). The nearly identical experimental (blue) vs. ANN trendline (red) show the ANN's ability to 'learn' non-linear behavior.

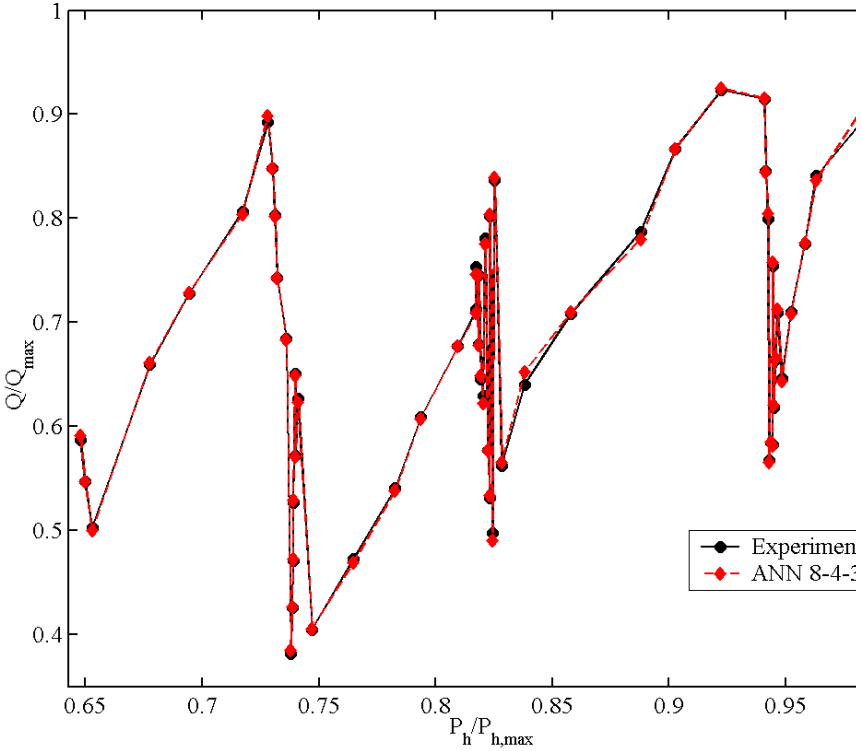

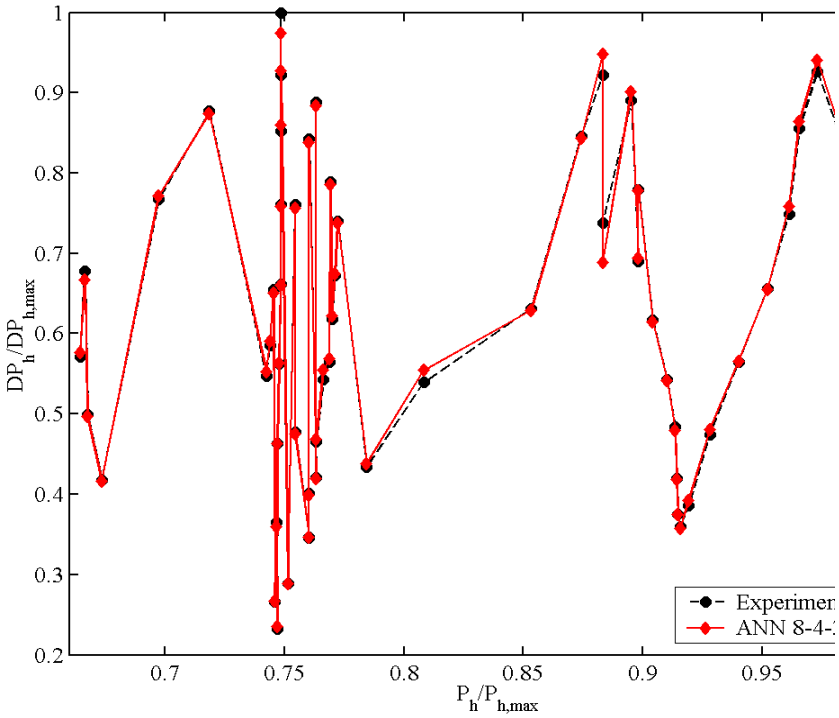

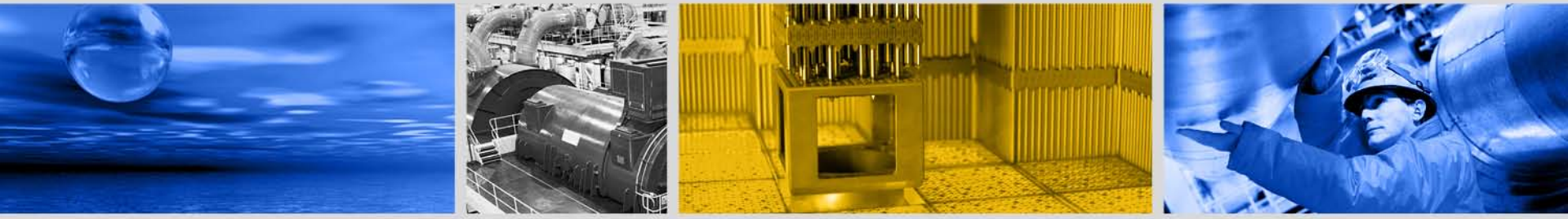

Intelligent Control Ideas

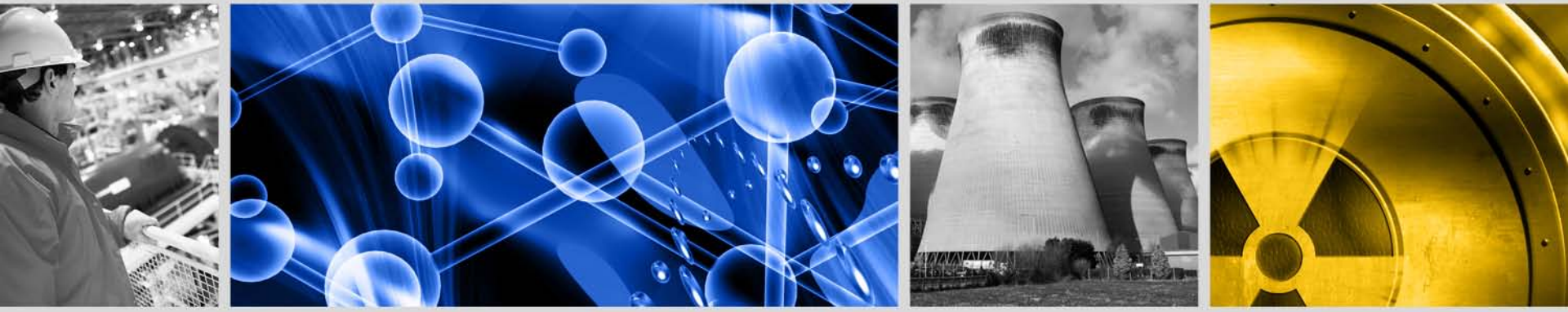

Intelligent Control Systems 'elements'

- Monitor and characterize non-linear thermal system behavior via available heuristic (neural network) approaches
  - 'Health monitoring' via central vs. distributed control under steady-state
  - Same under component/system fluctuations; then under transients/time dependent 'operational' space
  - 'new' I&C + human factors (HF) under accident response
- **Cross-cut under all operational 'modes'**
  - Prognostics: Extrapolation from/predicting the likely behavior from learned component/system behavior
  - Fault detection: Example, threshold deviation from the model; threshold can also be characterized
  - Diagnostics: Characterization via monitoring of componental/system behavior
  - Characterization/identification of ICS metrics
- **Components**
  - "smart" valves, level indicators, (P,T) indicators, flowmeters

Complex systems (HES); 'Metrics' LENDIT

Length Scales

L

Energy Scales

E

Number Scales

N

Distribution Scales

D

Purpose:
common communication basis; potentially risky communication effective; applicable across soft and hard domains; linked to analytical approaches

Information Scales

I

Time Scales

T

Application of ICS in process, data acquisition

- Ample evidence that modeling/simulations contain uncertainties as not all interactions are understood
- Available methods can characterize non-linear system behavior
- Issues on central vs. distributed control

Figure Schematics of the following: 'smart valve' and mass-flow-meter (L); distributed ICS network (R).

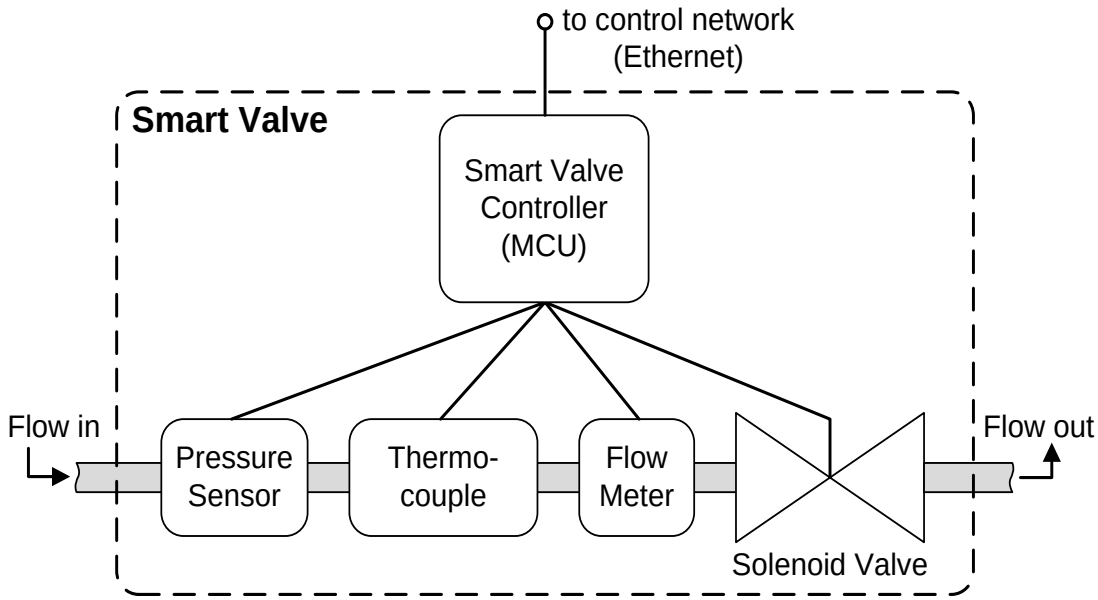

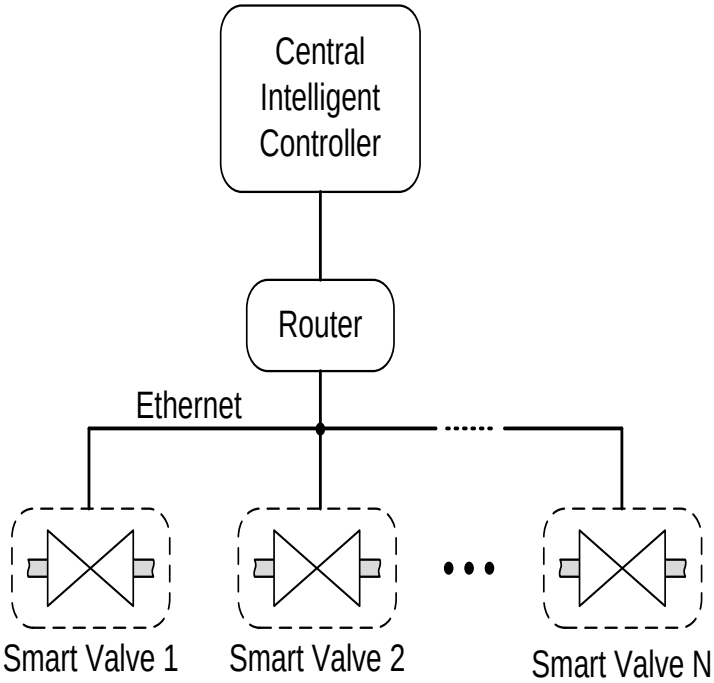

Energy storage, function/purpose

- In non-linear systems with multiple (thermal) components, one has active components – components into/out of which 'mass, momentum and energy flows(convected)'; these have particular LENDIT scales
- Storage systems/components, when linked to systems functions as 'buffers' because they have different LENDIT scales (typically T-scale distortion)
- Mismatch of primary vs. secondary vs. grid supply/demand can be accomodated via storage

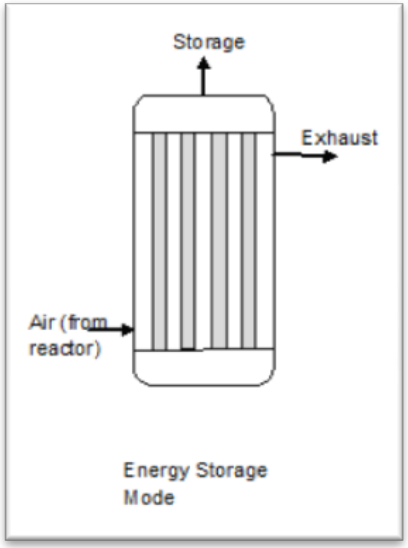

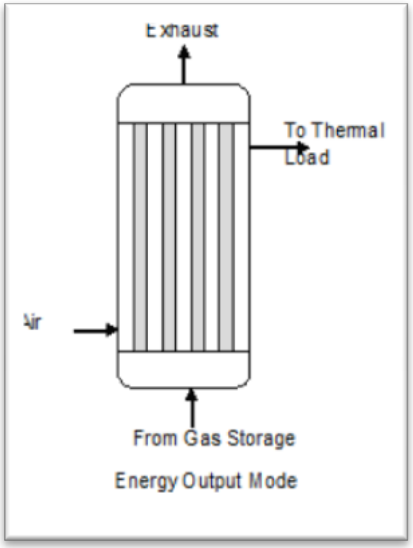

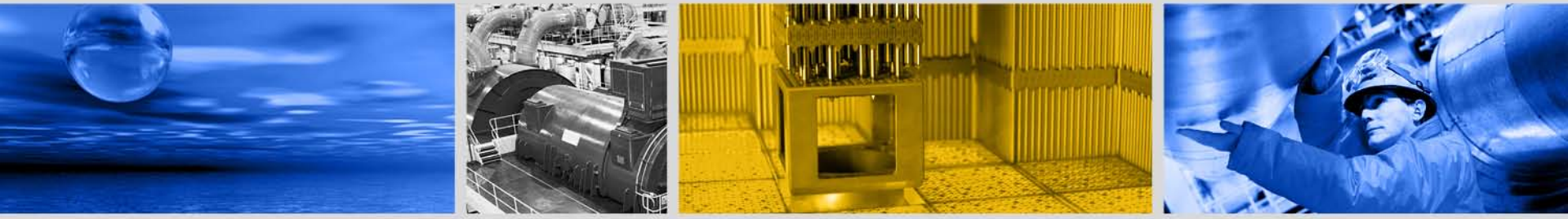

System Resiliency

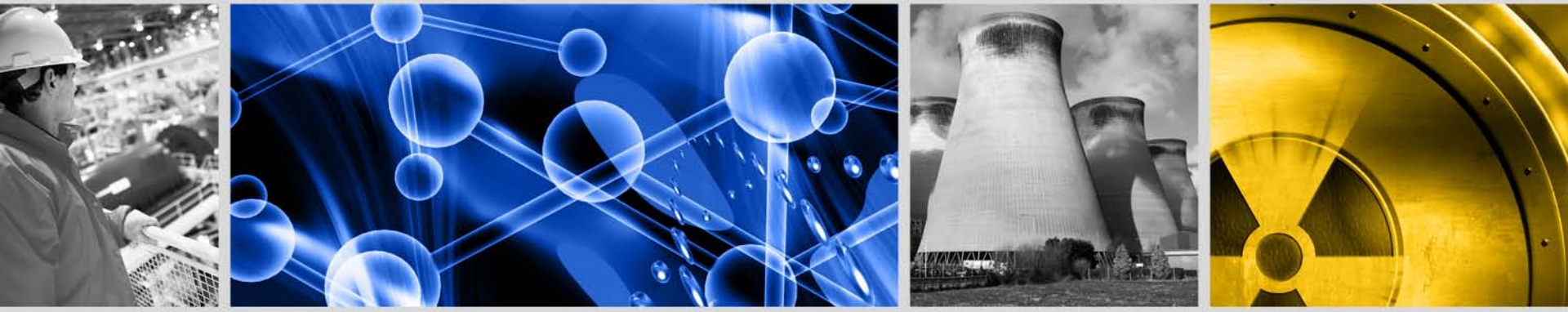

Resiliency, DBAs vs. BDBAs

1970 vs. 2011

Unwanted events are engineered'out'; Design Basis Engineered

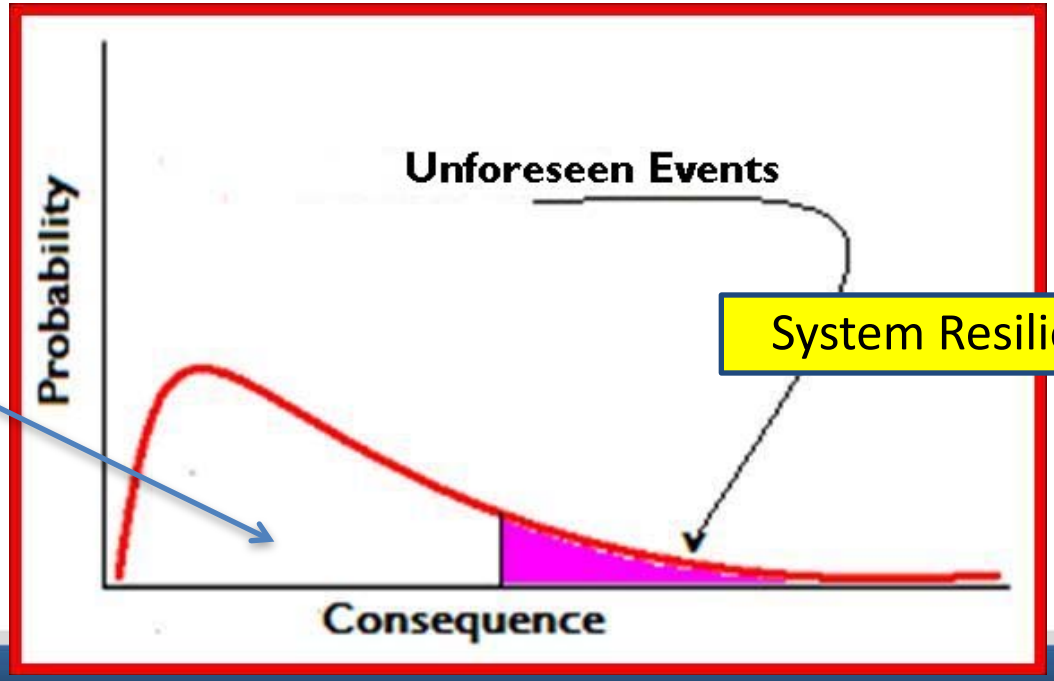

System Resiliency

System Resiliency

Take an automobile for example

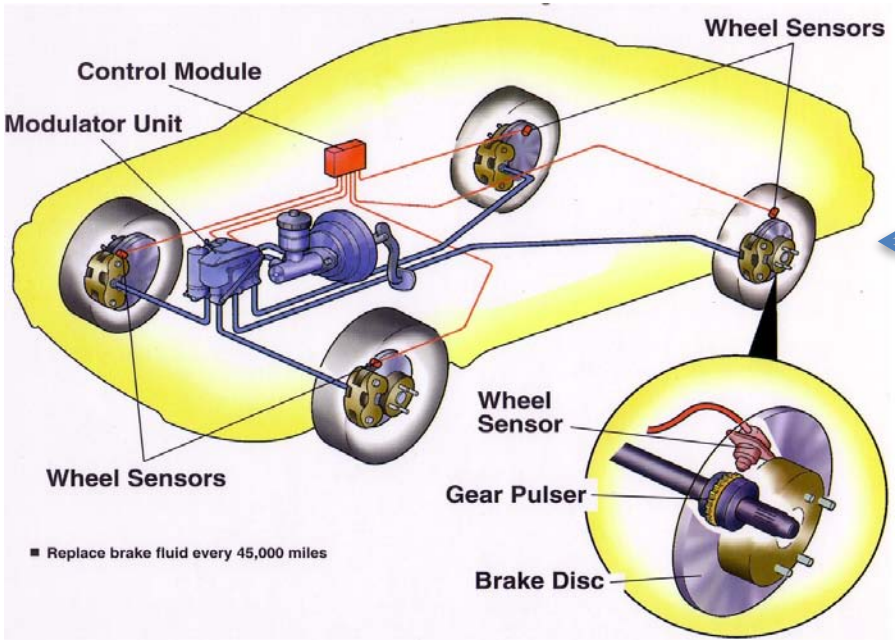

Design Basis Safety System

System Resiliency (unforeseen)

System resiliency and LWRS

- Safety of nuclear power plants again being questioned; again costly retrofits expected
- Deliver advances in components technology for secondary side to prepare for NGNP; concurrently offer 'new' components for current fleet of LWRs; X-cut to fossil fuel sectors
- Seems consistent with goals of NEET

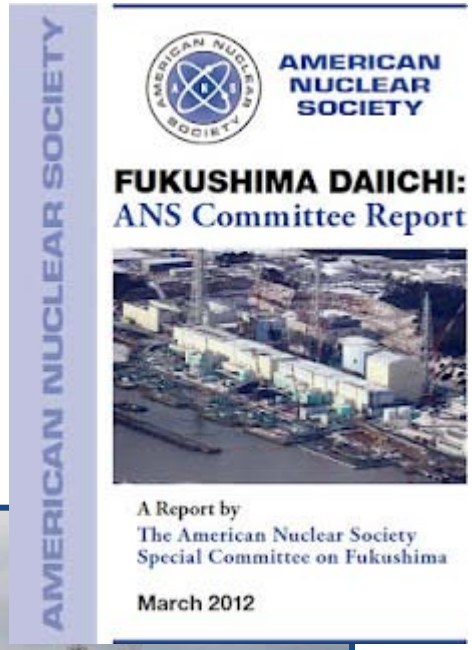

http://www.google.com/imgres?q=nuclear+power+rancho+seco&hl=en&gbv=2&tbm=isch&tbnid=40S3I7zRlzl-jM:&imgrefurl=http://www.freepik.com/free-photo/rancho-seco-nuclear-power-plant-3_342159.htm&docid=60L3jvewgYtr9M&w=626&h=417&ei=oBiCToX1HPDLsQL54ISBDw&zoom=1&iact=hc&vpx=479&vpy=89&dur=3518&hovh=183&hovw=275&tx=126&ty=65&page=1&tbnh=123&tbnw=165&start=0&ndsp=19&ved=1t:429,r:2,s:0&biw=1280&bih=568

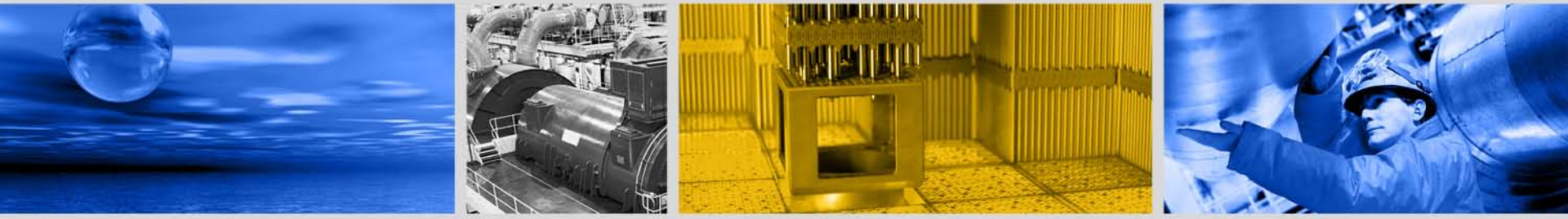

‘Value’ Proposition

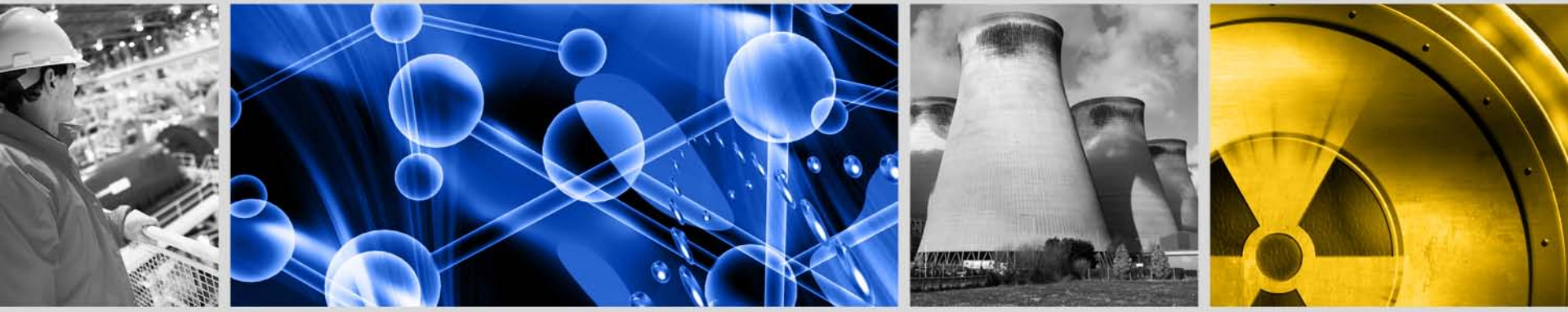

X-cut components, (reverse) R&DD

- R&D, technology and industry; key is near-term applied projects and concurrent production of prototypes
- Provide deliverable that are X-cut wares; (P,T), water-level, flowmeter, valves + elec. pkg + data acquisition/transmitters
- Gov't: reverse define the R&D, do the research; also do the higher risk research/projects are 7-10+ to commercialization

http://www.google.com/imgres?q=nuclear+power+rancho+seco&hl=en&gbv=2&tbm=isch&tbnid=40S3I7zRlzl-jM:&imgrefurl=http://www.freepik.com/free-photo/rancho-seco-nuclear-power-plant-3_342159.htm&docid=60L3jvewgYtr9M&w=626&h=417&ei=oBiCToX1HPDLsQL54ISBDw&zoom=1&iact=hc&vpx=479&vpy=89&dur=3518&hovh=183&hovw=275&tx=126&ty=65&page=1&tbnh=123&tbnw=165&start=0&ndsp=19&ved=1t:429,r:2,s:0&biw=1280&bih=568

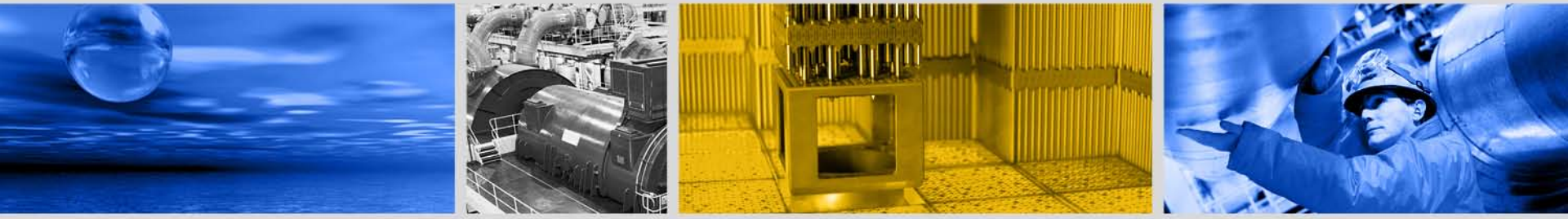
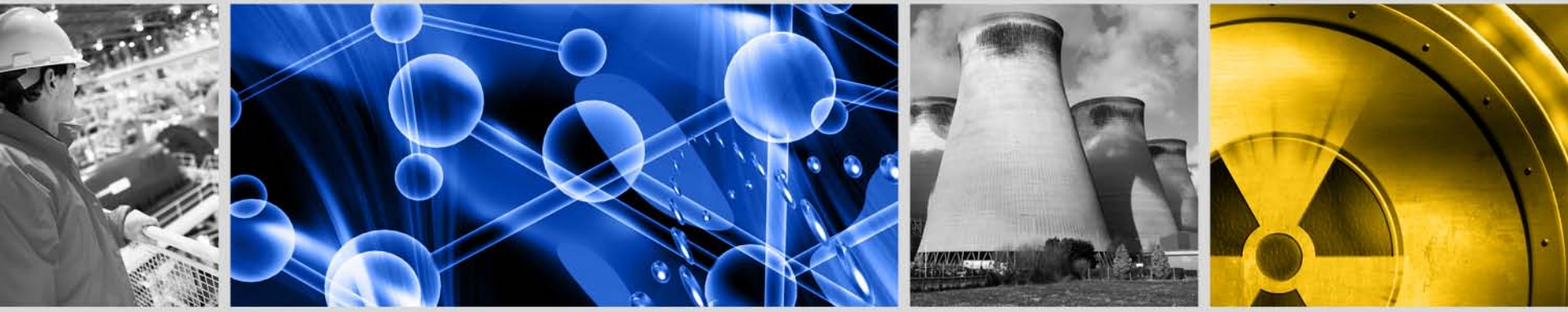
Questions?
Discussion