ELECTRIC POWER RESEARCH INSTITUTE

Materials Degradation and Aging Management Tools

Robin Dyle

Technical Executive, EPRI

INEST Event - MIT

March 19, 2012

Field Experience

© 2012 Electric Power Research Institute, Inc. All rights reserved.

V. C. Summer

- Crack in RCS hot leg, Fall 2000
  - A Hot Leg Nozzle to Pipe Weld

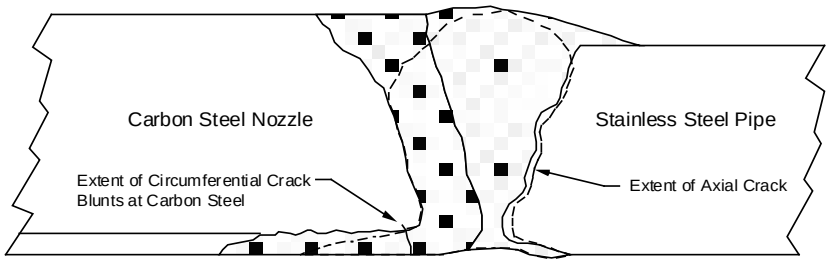

© 2012 Electric Power Research Institute, Inc. All rights reserved.

ELECTRIC POWER RESEARCH INSTITUTE

South Texas Project

- April 2003:

  Bottom mounted instrument penetrations

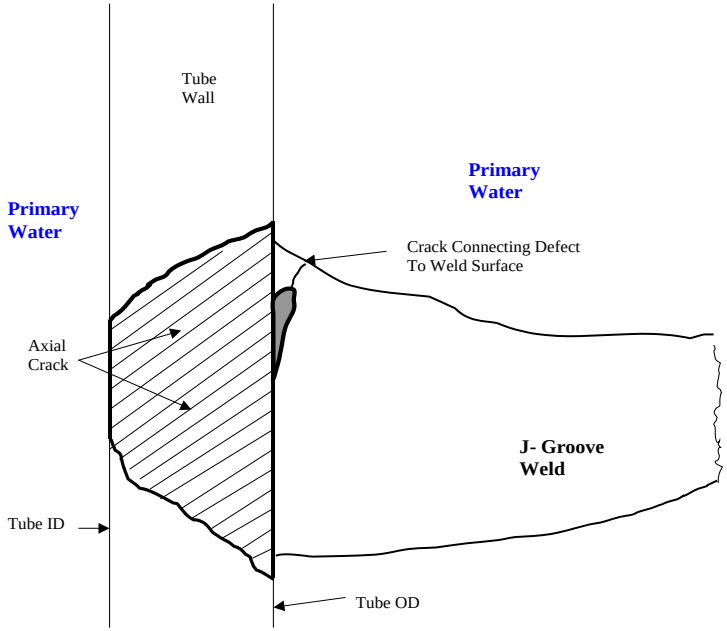

© 2012 Electric Power Research Institute, Inc. All rights reserved.

ELECTRIC POWER RESEARCH INSTITUTE

RPVH Penetrations

- Leaking CRDM Penetrations

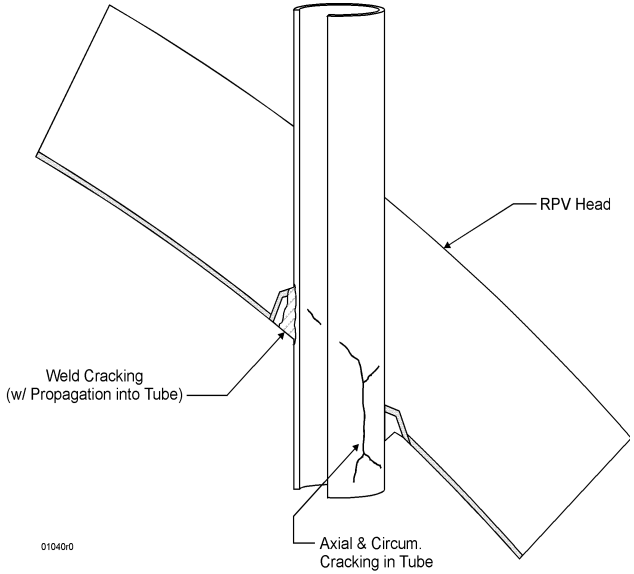

© 2012 Electric Power Research Institute, Inc. All rights reserved.

ELECTRIC POWER RESEARCH INSTITUTE

Palo Verde 2

- Cracks in pressurizer heater sleeves, October 2003
  - First known instance of circumferential cracks in heater sleeves

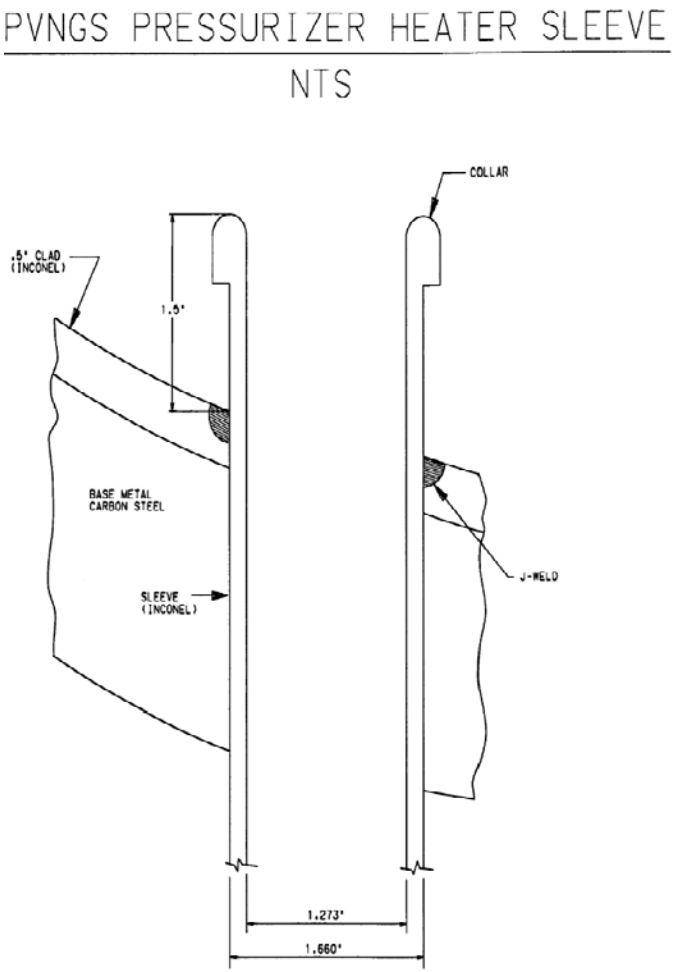

© 2012 Electric Power Research Institute, Inc. All rights reserved.

ELECTRIC POWER RESEARCH INSTITUTE

Davis-Besse

- March 2002
  - CRDM penetration and head wastage

© 2012 Electric Power Research Institute, Inc. All rights reserved.

BWR Stress Corrosion Cracking Examples

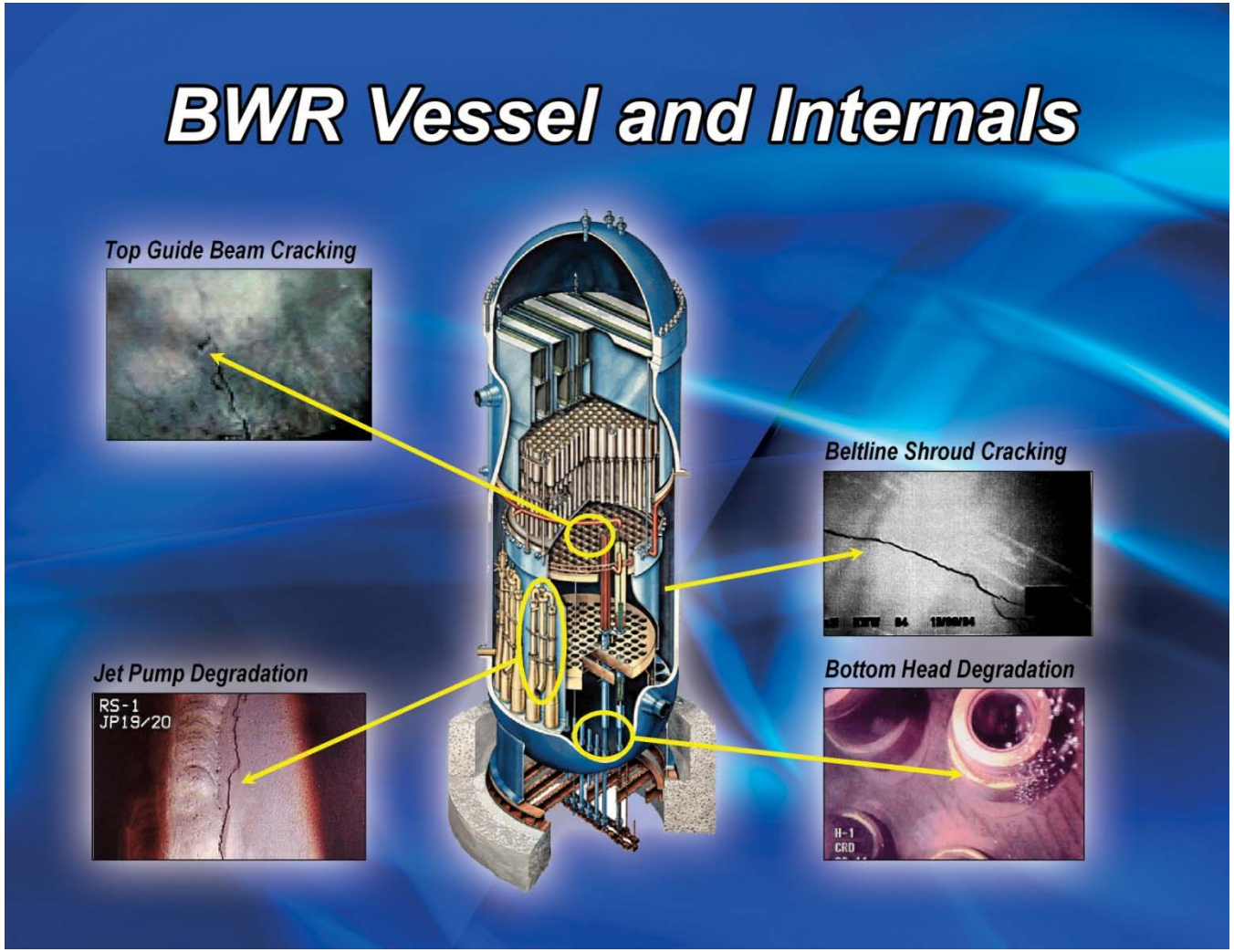

© 2012 Electric Power Research Institute, Inc. All rights reserved.

ELECTRIC POWER RESEARCH INSTITUTE

SCC of BWR Core Shroud

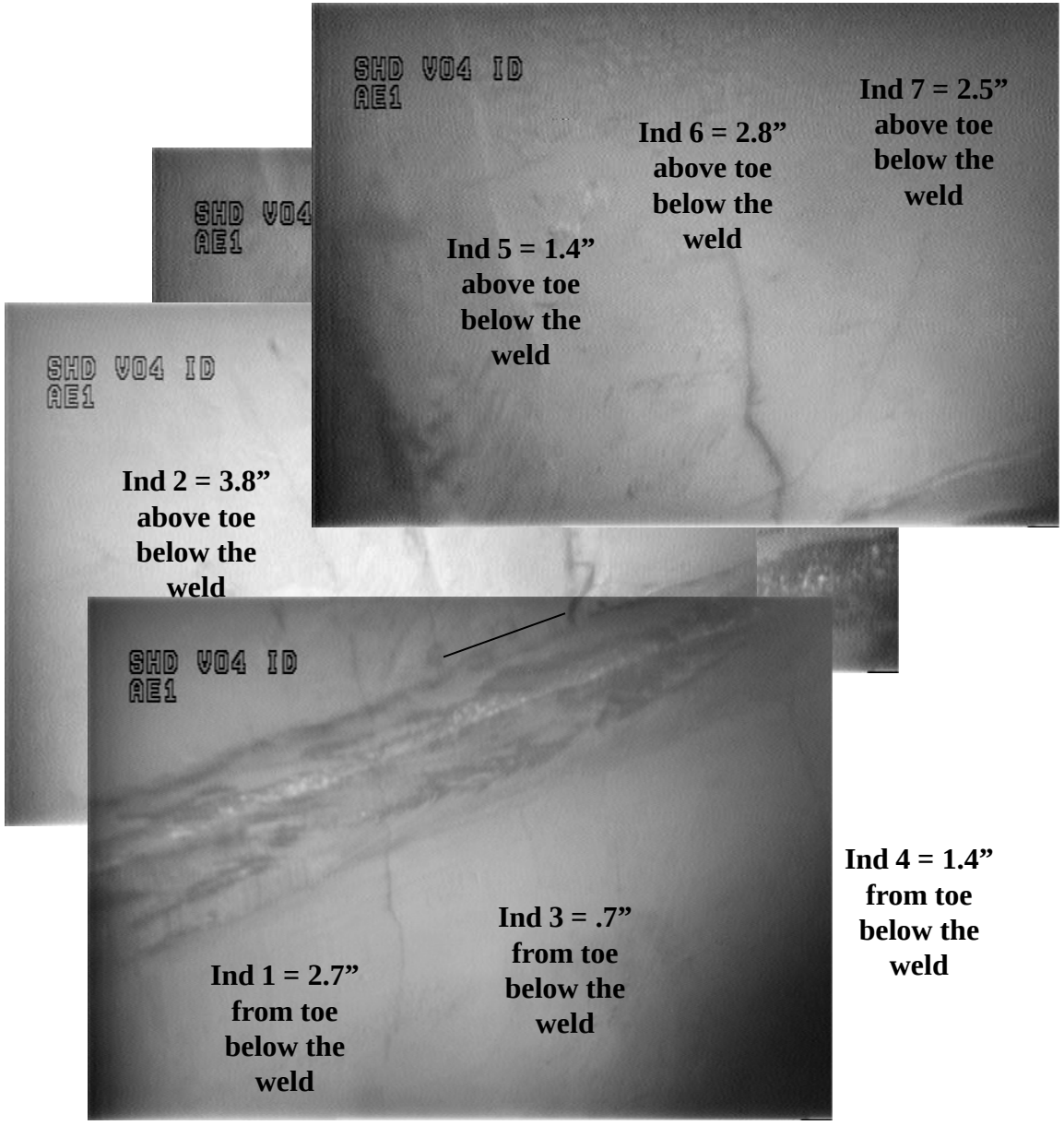

Vert weld width ~1.4”

© 2012 Electric Power Research Institute, Inc. All rights reserved.

ELECTRIC POWER RESEARCH INSTITUTE

SCC of BWR Core Shroud

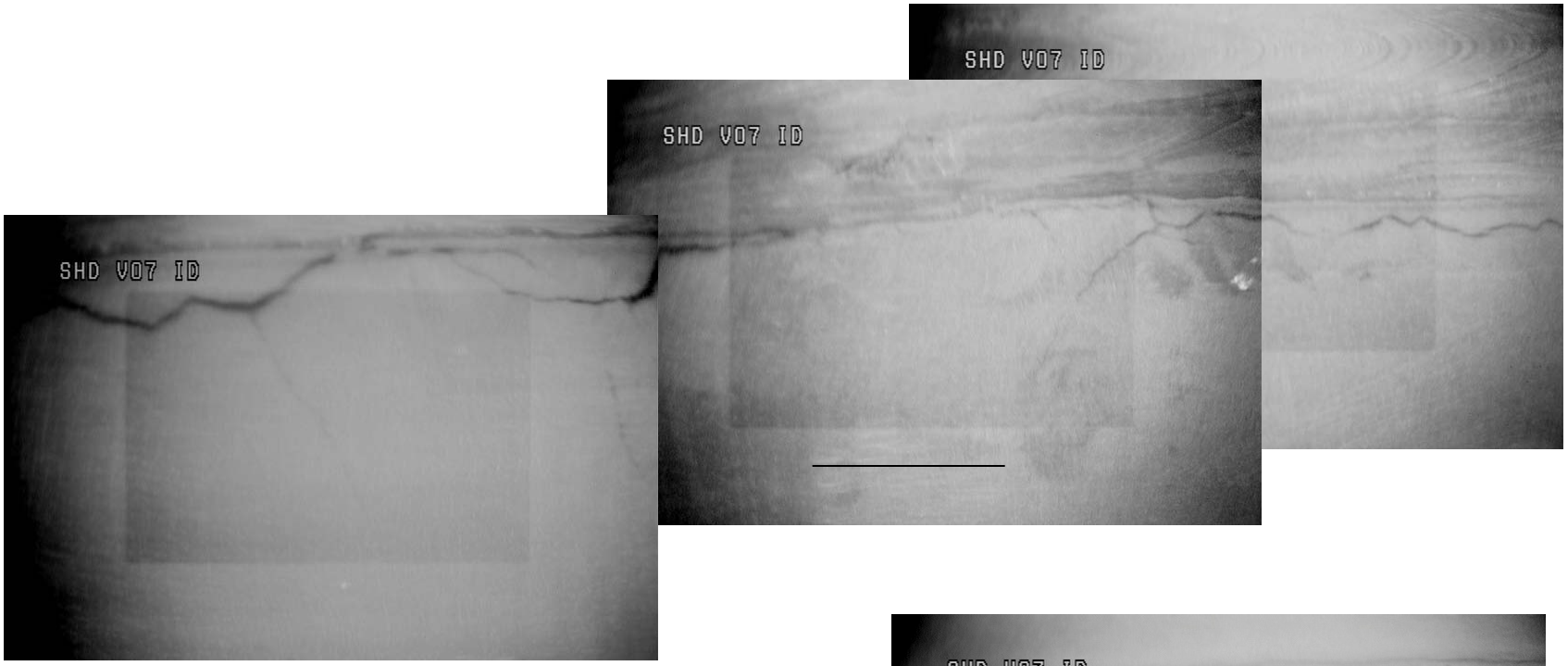

Vertical Weld
Width = 1.4”

© 2012 Electric Power Research Institute, Inc. All rights reserved.

Repair and Mitigation

- Repairs are available and effective
  - Can be expensive
  - Effect outage duration
  - Creates inspection issues
- Mitigation is available for many locations
  - Hydrogen Water Chemistry and Noble Metal Chemical Application effective for BWRs, but has limitations
  - Chemical mitigation for PWRs not available
  - Multiple “mechanical options”

© 2012 Electric Power Research Institute, Inc. All rights reserved.

BWR Repairs

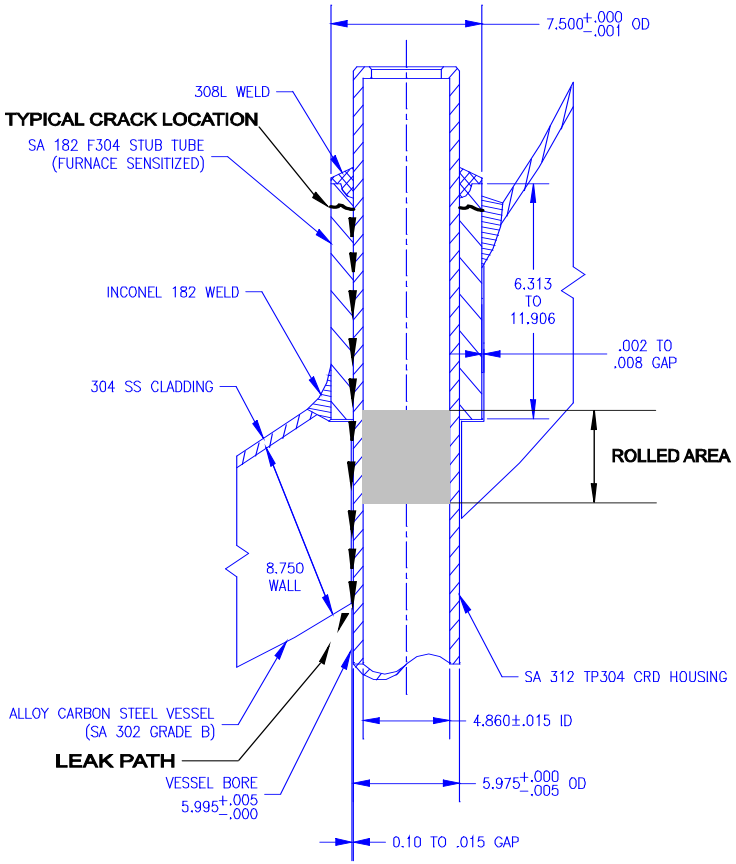

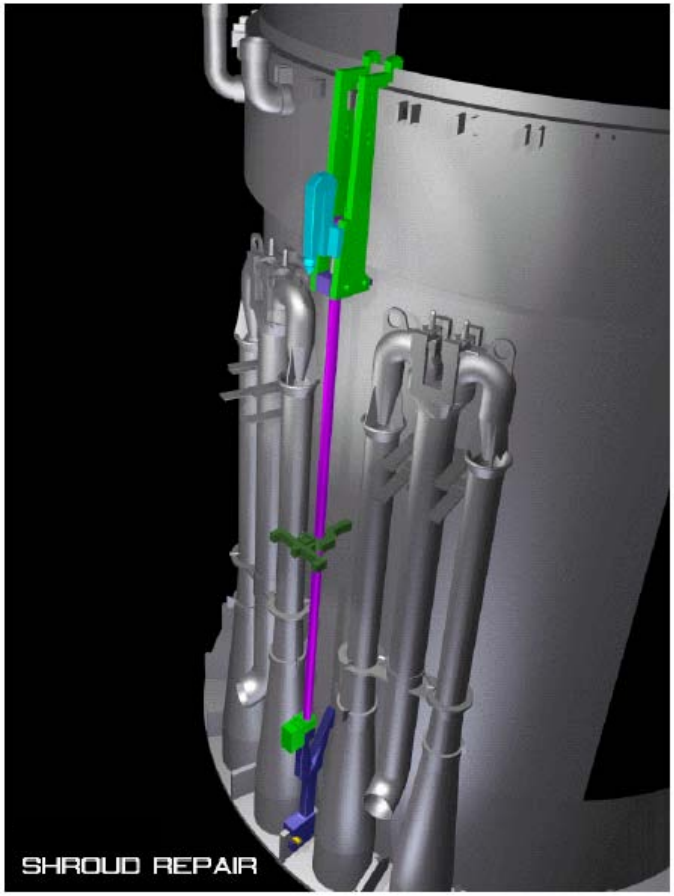

© 2012 Electric Power Research Institute, Inc. All rights reserved.

ELECTRIC POWER RESEARCH INSTITUTE

Plant Decision Exercise

- Example of the thought process for making a decision on what if, any PWSCC mitigation to deploy.
- No right or wrong answer
- For each mitigation method consider:
  - Strengths and weaknesses
  - Limitations associated with its use
  - Issues associated with weld location and configuration
  - NDE aspects
  - Other outage activities that affect the decision

© 2012 Electric Power Research Institute, Inc. All rights reserved.

Weld Overlay

- Process
  - Application of resistant material to the outside surface of the component
    - Puts inside surface in compression
    - Resistant material provides added assurance that no flaws will leak
    - Design ensures structural integrity of component even if small flaws are present
      - Removes driving stresses
      - Design assumes flaws are present up to 100% of wall thickness
    - If applied properly, can improve the examination access for inspection

© 2012 Electric Power Research Institute, Inc. All rights reserved.

Weld Overlay (Cont.)

- New Applications
  - Optimized design overlays
    - Thinner
    - Applied quicker
    - Design assumes smaller flaw (75% Through-wall)
  - Target application area
      - Large diameter thick components
  - Requires examination of a larger portion of the original base material under the overlay
    - Upper 50% verses upper 25%

© 2012 Electric Power Research Institute, Inc. All rights reserved.

WOL Design Concepts

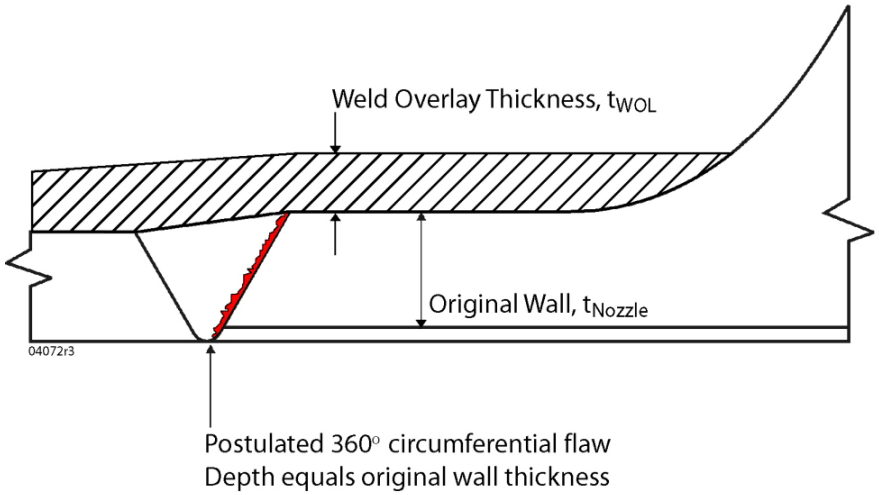

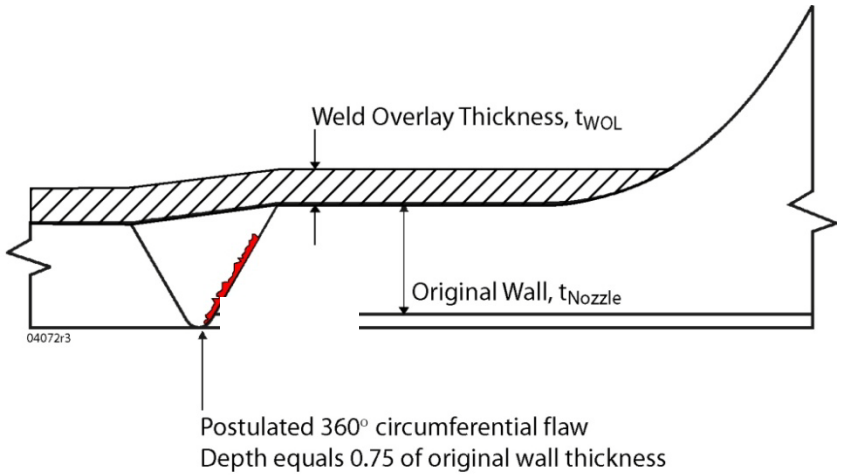

Full Structural Overlay (FSWOL)

Optimized Overlay (OWOL)

© 2012 Electric Power Research Institute, Inc. All rights reserved.

ELECTRIC POWER RESEARCH INSTITUTE

82/182 PWSCC Mitigation and Repair

- Weld Overlay
  - Full structural or optimized 52M weld overlay is industry accepted method for repair or mitigation of PWSCC susceptible 82/182 welds

In-process 52M Overlay on Pressurizer Safety Nozzle

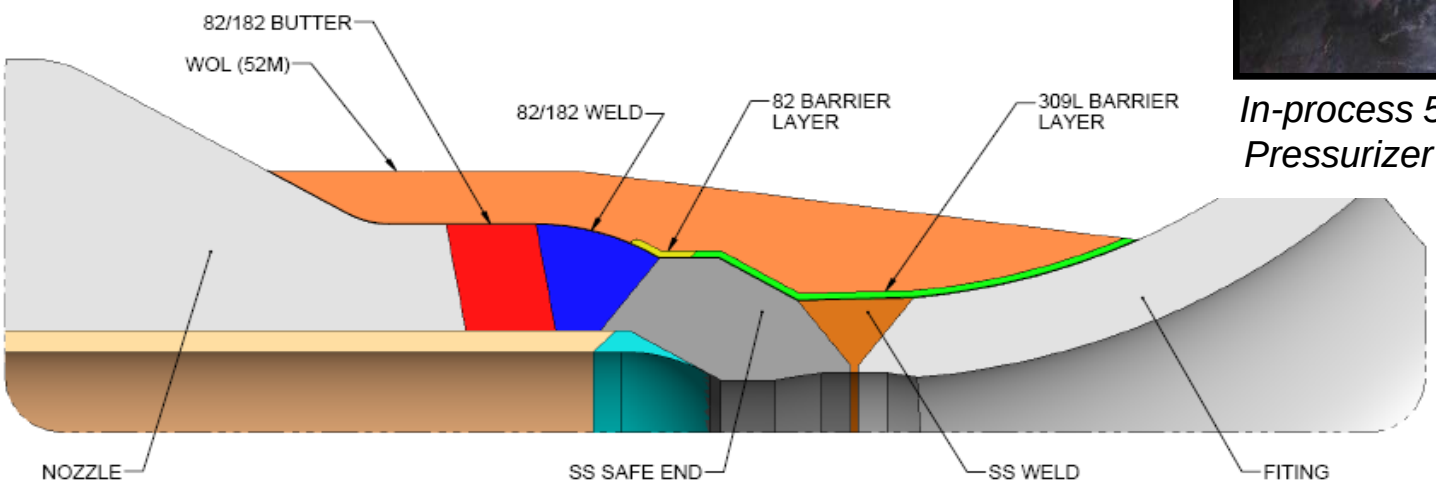

Schematic of 52M Structural Weld Overlay

© 2012 Electric Power Research Institute, Inc. All rights reserved.

ELECTRIC POWER RESEARCH INSTITUTE

Inlay Technology

- Process
  - Machine away a small portion of the susceptible material at the inside surface
  - Apply protective 52M layer
  - Machine smooth after application
  - Resistant material will isolate the susceptible material from RCS Coolant
  - Compliance with Design Basis

© 2012 Electric Power Research Institute, Inc. All rights reserved.

Inlay Technology (Cont.)

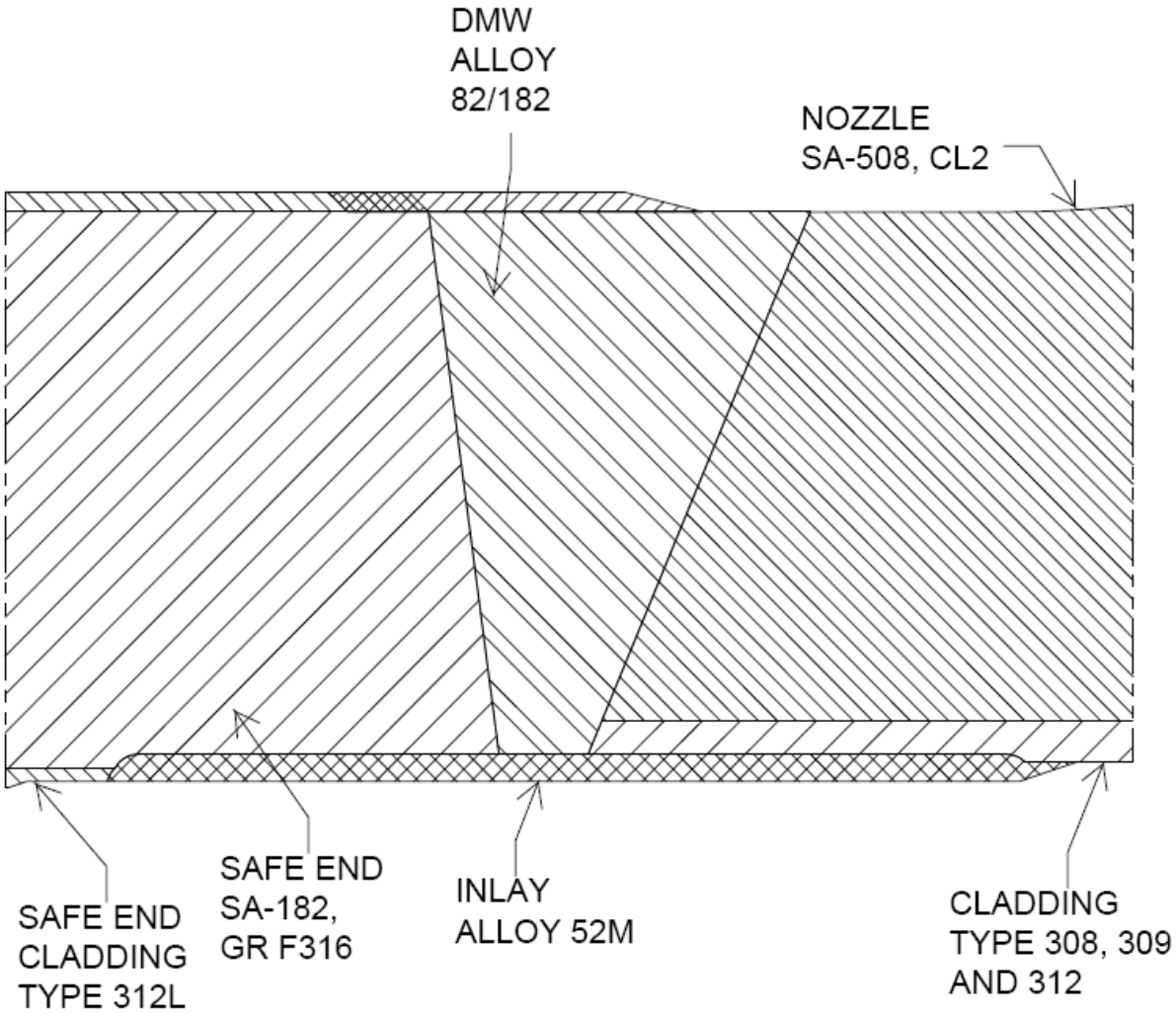

© 2012 Electric Power Research Institute, Inc. All rights reserved.

ELECTRIC POWER RESEARCH INSTITUTE

Onlay Technology

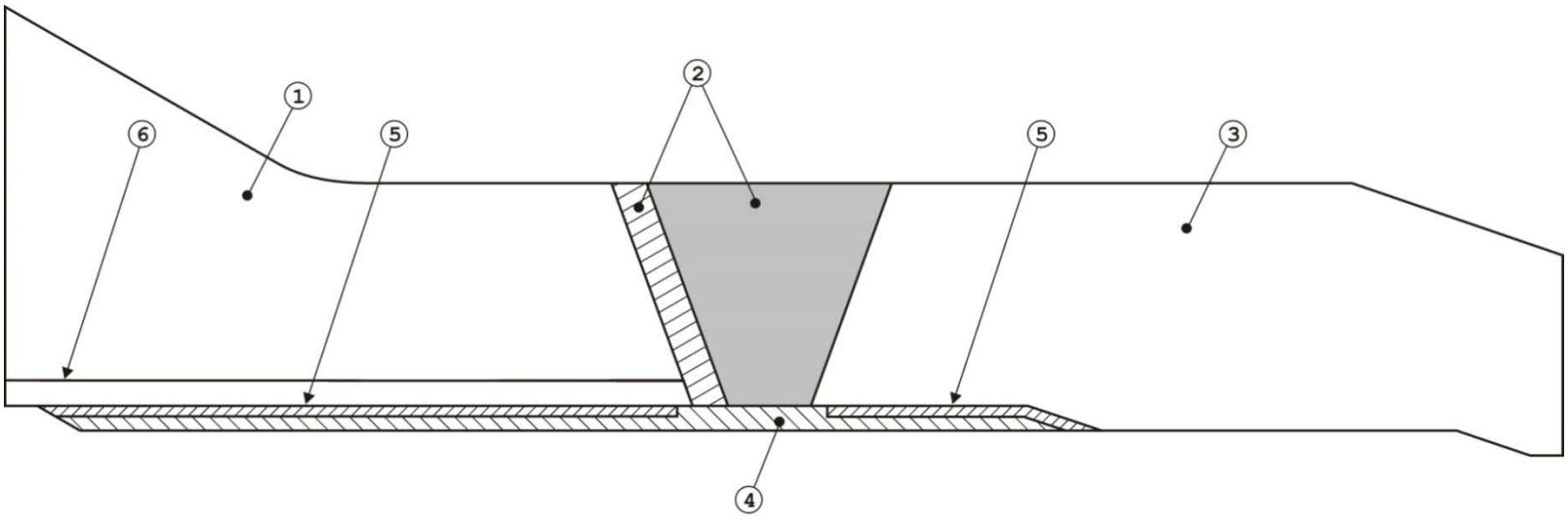

PARTS LIST		MATERIALS
1.	NOZZLE FORGING	A-508 CL.2
2.	WELD/BUTTER	ALLOY 82/182
3.	SAFE-END	SA-336 GR.F8M
4.	WELD ONLAY	ALLOY 52M
5.	BUFFER LAYER	ER308L
6.	CLADDING	ER308L

© 2012 Electric Power Research Institute, Inc. All rights reserved.

ELECTRIC POWER RESEARCH INSTITUTE

82/182 PWSCC Mitigation and Repair

- Inlay / Onlay on Inside Diameter
  - 52M provides barrier between susceptible 182 and environment
  - Machine GTAW or underwater laser beam welding process

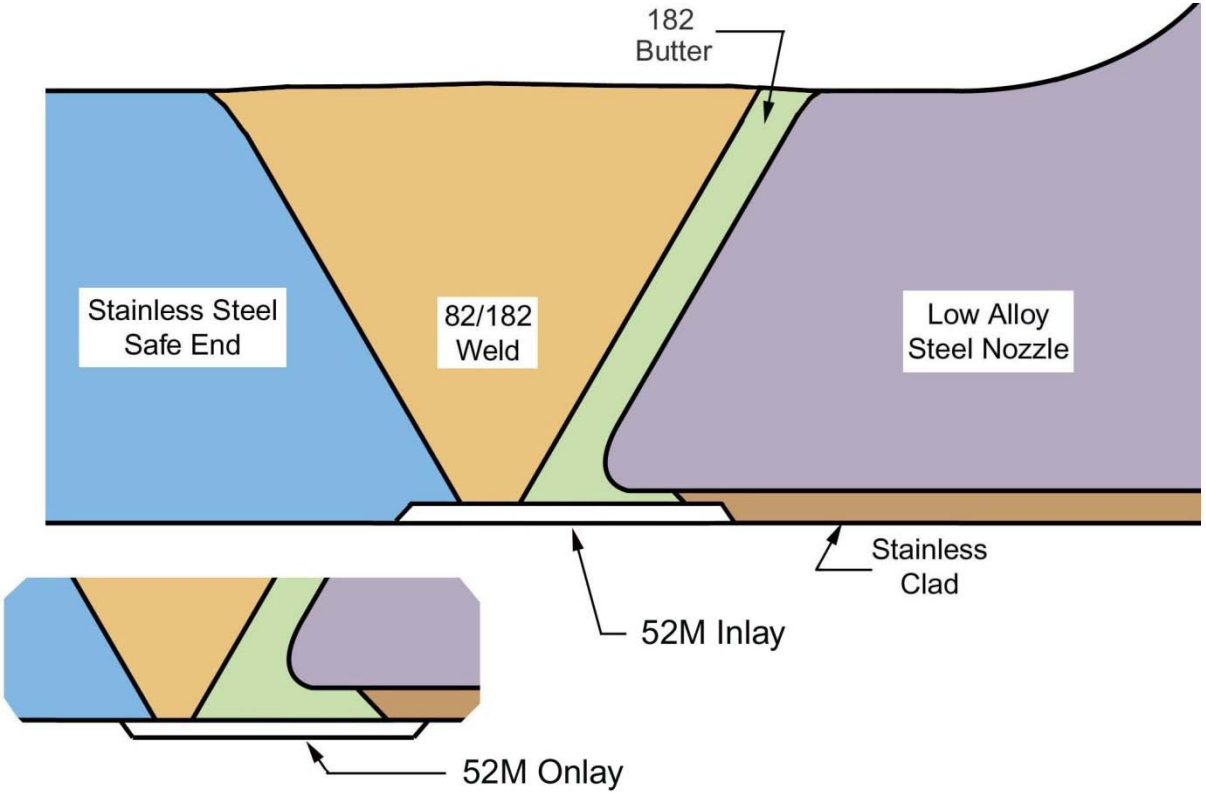

Schematic of 52M Inlay & Onlay Mitigation

© 2012 Electric Power Research Institute, Inc. All rights reserved.

ELECTRIC POWER RESEARCH INSTITUTE

Mechanical Stress Improvement Process (MSIP)

- Process
  - OD deformation applied mechanically (clamp)
    - Puts inside surface (inner 30%) in compression
- Prerequisites
  - Must have access to outside surface to place equipment
  - Must ensure that no flaws greater than 30% through wall are present
    - Deeper flaws that have grown out of compressed zone may not be mitigated
- Inspection Issues
  - Susceptible material must be examined prior to and after application
    - Configuration may not allow for examination
    - If adequate coverage cannot be obtained technical basis to MSIP process is challenged

© 2012 Electric Power Research Institute, Inc. All rights reserved.

MSIP Tool sketch

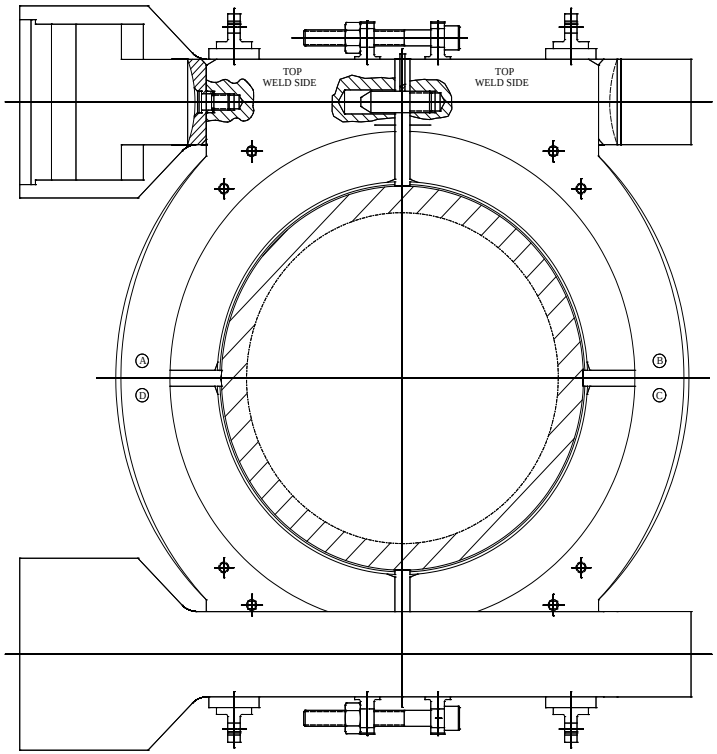

© 2012 Electric Power Research Institute, Inc. All rights reserved.

ELECTRIC POWER RESEARCH INSTITUTE

MSIP Mockup

© 2012 Electric Power Research Institute, Inc. All rights reserved.

ELECTRIC POWER RESEARCH INSTITUTE

Peening as a Surface Stress Improvement (SSI) Treatment for SCC Mitigation

Peening is a surface stress improvement treatment to reduce tensile residual stress on metal surface, which is very effective to mitigate SCC and other EAC failures.

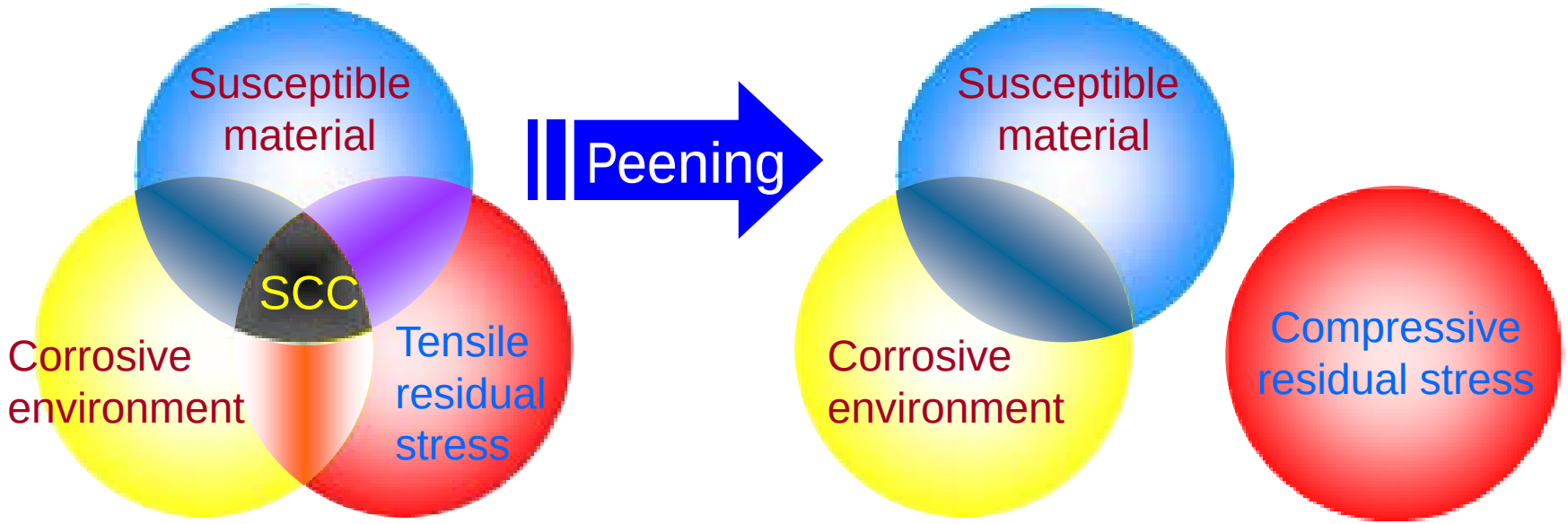

SCC degradation

Mitigation of SCC

© 2012 Electric Power Research Institute, Inc. All rights reserved.

ELECTRIC POWER RESEARCH INSTITUTE

SSI Technique ---- Fiber Laser Peening

- Fiber Laser Peening (FLP)
  - *Focused short pulse laser irradiate metal surface in water*
  - *High-pressure (~5GPa) plasma forms on the metal surface*
  - *Shock wave forms, impinges on metal surface, and creates permanent strains*
  - *Compressive residuals is produced by constraint of surrounding material, after the shock wave*
  - *Vendor: Toshiba*

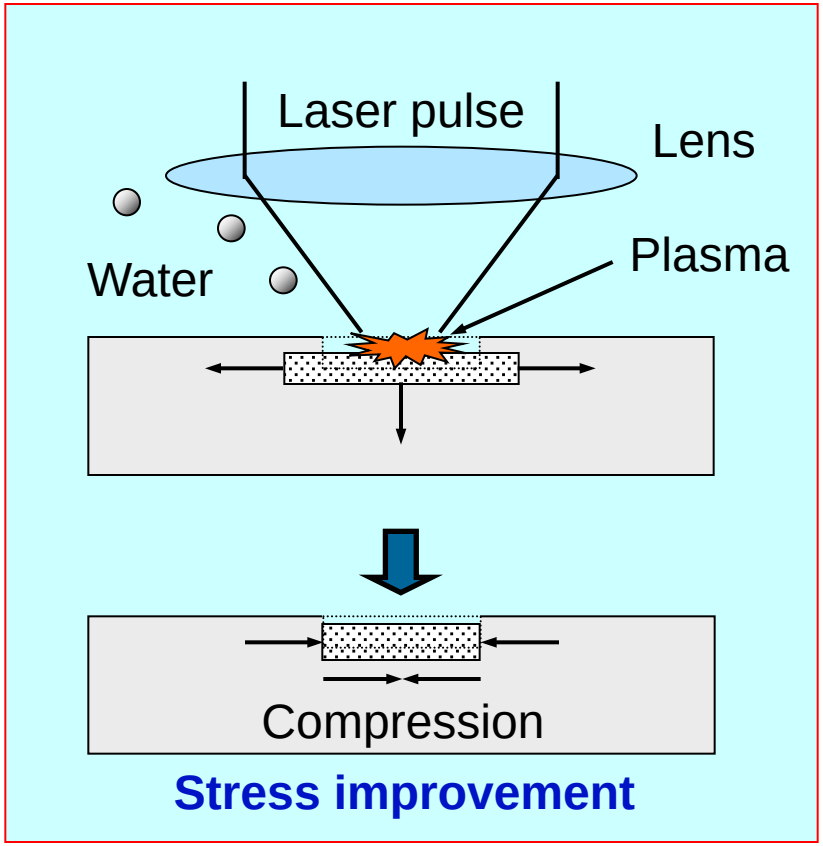

(Schematic provided by Toshiba)

© 2012 Electric Power Research Institute, Inc. All rights reserved.

ELECTRIC POWER RESEARCH INSTITUTE

SSI Technique ---- Water jet Peening

- Water Jet Peening (WJP): (vendors: Hitachi-GE, Mitsubishi)
  - *High-speed jet induces strong vortices in the flow as well as the turbulence*
  - *Water is locally evaporated to form cavitation bubbles due to pressure drop*
  - *The rapidly collapse of cavitation bubbles generates an extremely shock pressure*
  - *Compressive residuals is produced after the shock wave*

Cavitation flow image

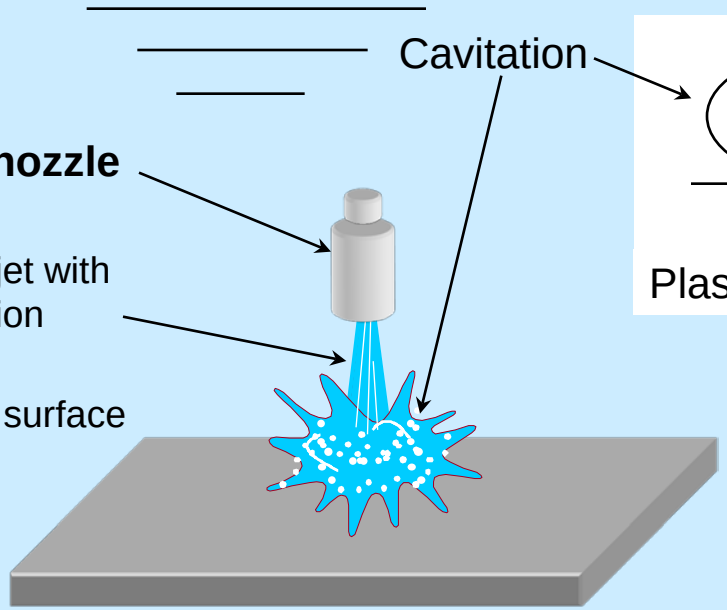

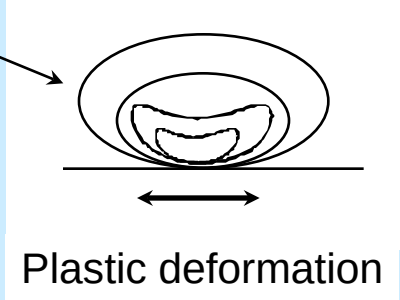

Pressure by cavitation collapse: around 1,000 MPa

(Schematic provided by Hitachi-GE)

© 2012 Electric Power Research Institute, Inc. All rights reserved.

Difficult inspection

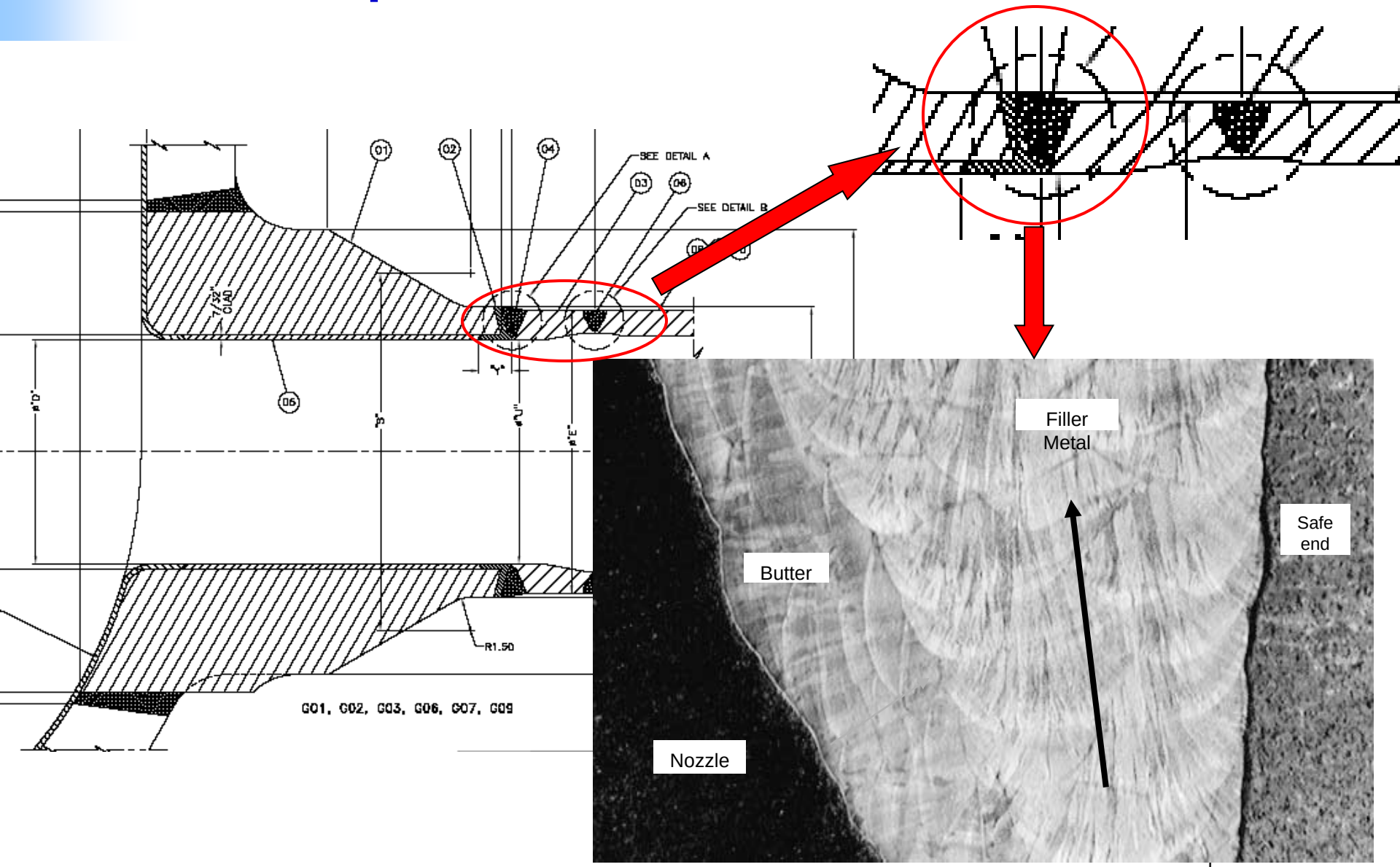

© 2012 Electric Power Research Institute, Inc. All rights reserved.

ELECTRIC POWER RESEARCH INSTITUTE

Weld Overlay NDE

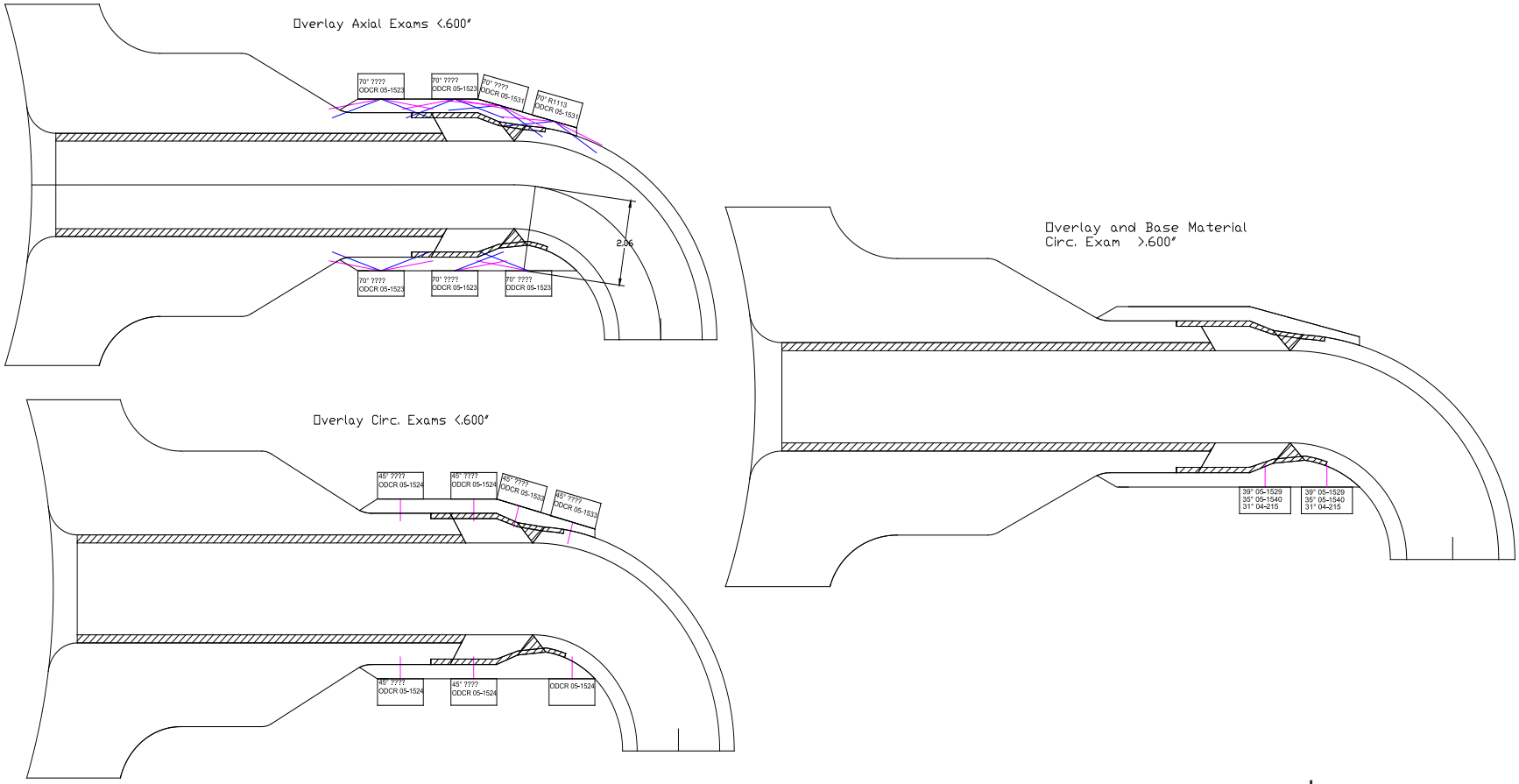

© 2012 Electric Power Research Institute, Inc. All rights reserved.

ELECTRIC POWER RESEARCH INSTITUTE

Poor surface conditions

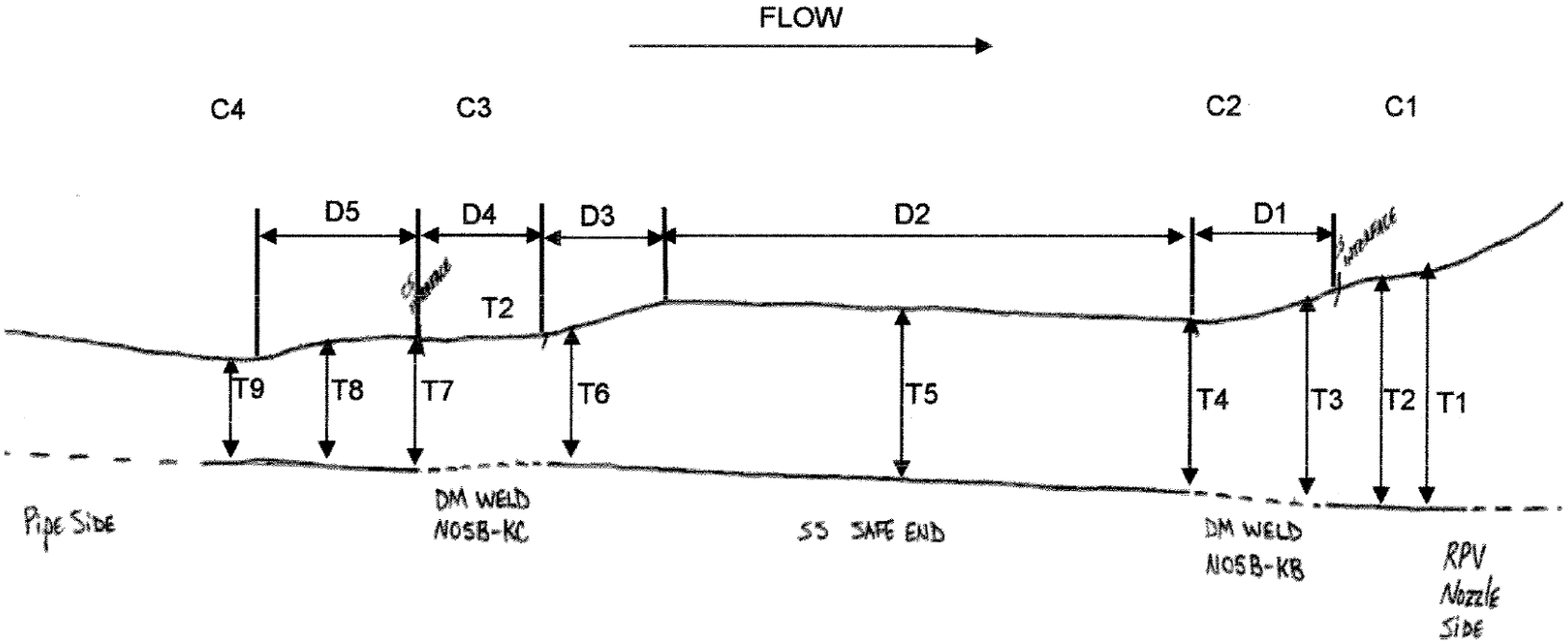

© 2012 Electric Power Research Institute, Inc. All rights reserved.

NDE personnel have been challenged to accept very bad surface contours

© 2012 Electric Power Research Institute, Inc. All rights reserved.

ELECTRIC POWER RESEARCH INSTITUTE

Mitigation Selection Discussion

Consider an unflawed pressurizer surge nozzle like the one below

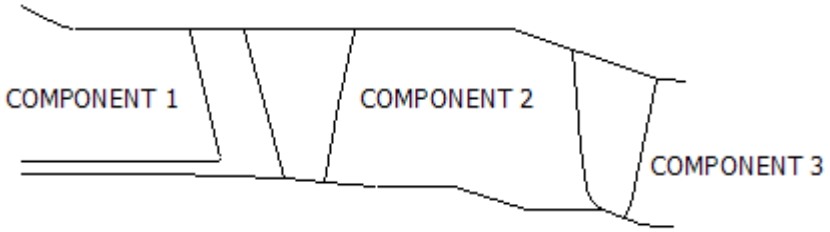

© 2012 Electric Power Research Institute, Inc. All rights reserved.

ELECTRIC POWER RESEARCH INSTITUTE

Mitigation Selection Discussion

- Question -what method will you choose considering:
  - Strengths and weaknesses
  - Limitations associated with its use
  - Issues associated with weld location and configuration
  - NDE aspects
  - Other outage activities that affect the decision
  - How does the decision change if weld is flawed

© 2012 Electric Power Research Institute, Inc. All rights reserved.

Future

- What will fail next?
- When will it fail?
- Are replacement materials susceptible
- How can we mitigate aging?

Industry must address this problem

© 2012 Electric Power Research Institute, Inc. All rights reserved.

BWR Internal Components

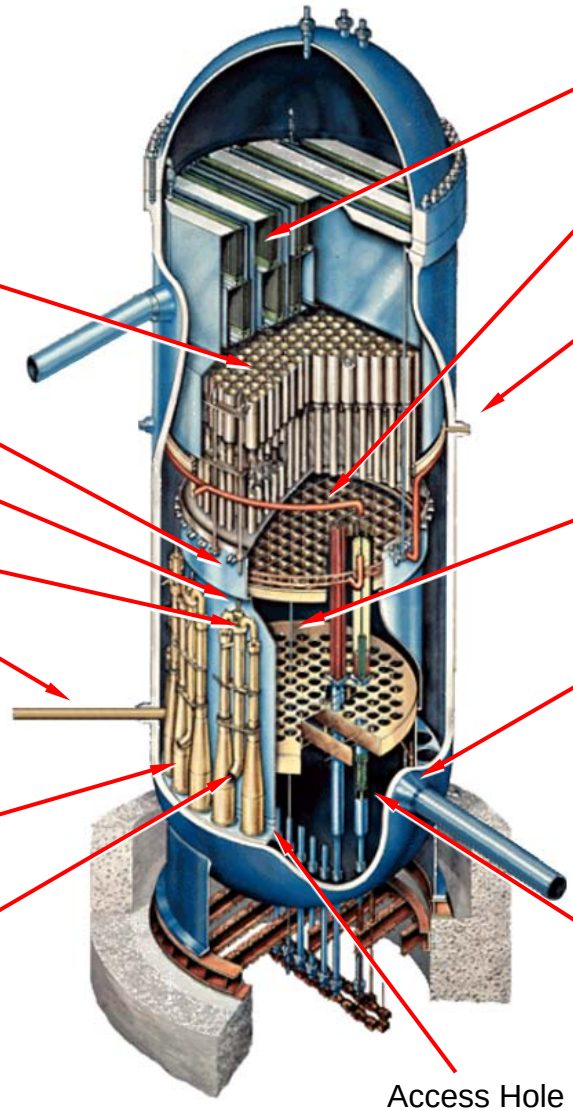

© 2012 Electric Power Research Institute, Inc. All rights reserved.

ELECTRIC POWER RESEARCH INSTITUTE

PWR PWSCC Potential Impact

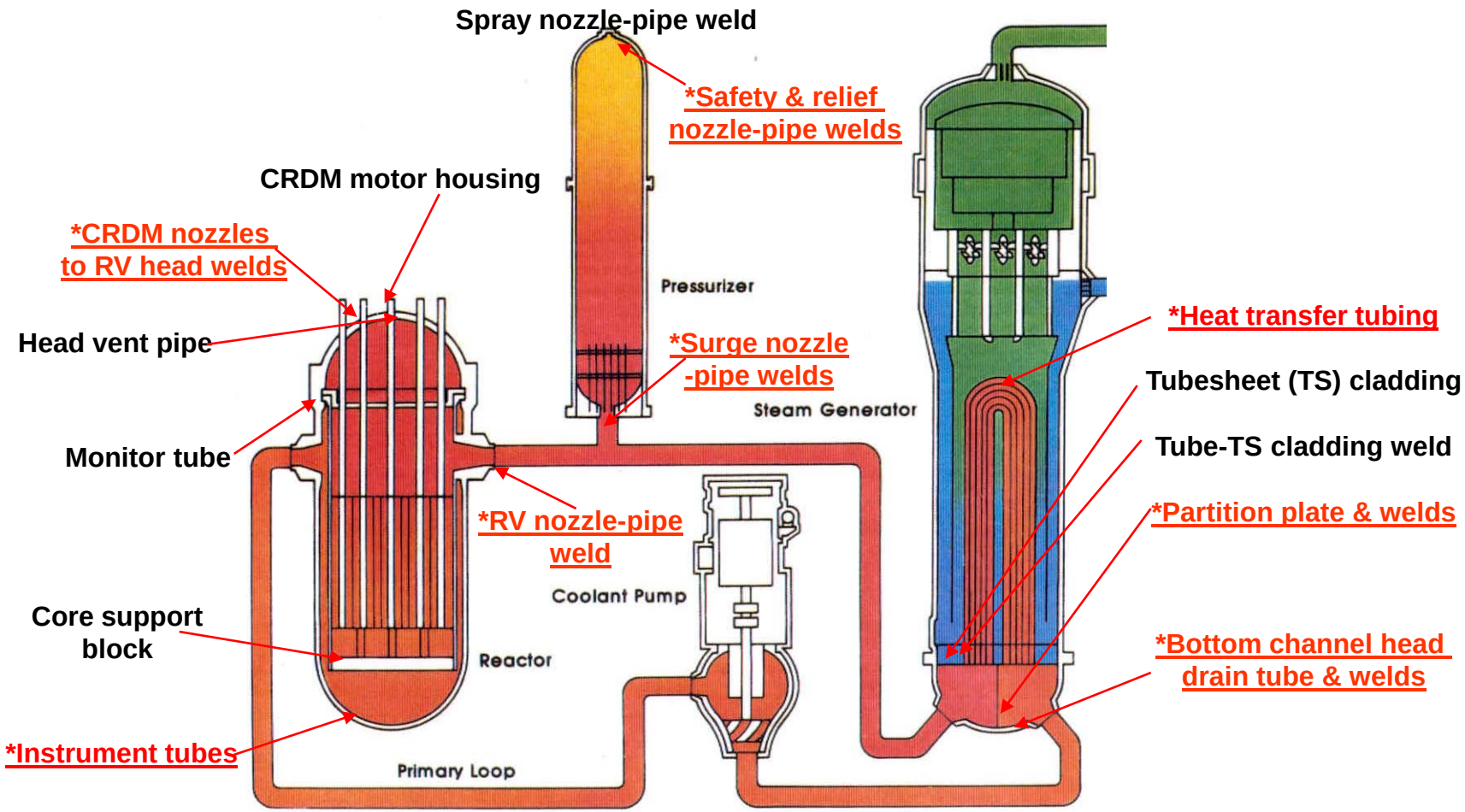

* Represents locations that have experienced cracking and or leakage at other PWRs are highlighted in red.

© 2012 Electric Power Research Institute, Inc. All rights reserved.

ELECTRIC POWER RESEARCH INSTITUTE

Questions affecting industry implementation

- What groups are involved?
- What should we do?
- What do we know?
- What are the threats?
- How do we rank issues?
- Who should do the work?
- How much will we spend and on what will we spend it?
- How do we monitor progress?

© 2012 Electric Power Research Institute, Inc. All rights reserved.

Issue Programs in Initiative

- EPRI
  - BWRVIP
  - MRP
  - SGMP
  - NDE
  - Corrosion Research
  - Chemistry Control

- PWROG Materials Sub-committee

© 2012 Electric Power Research Institute, Inc. All rights reserved.

Progression of Environmental Cracking Damage

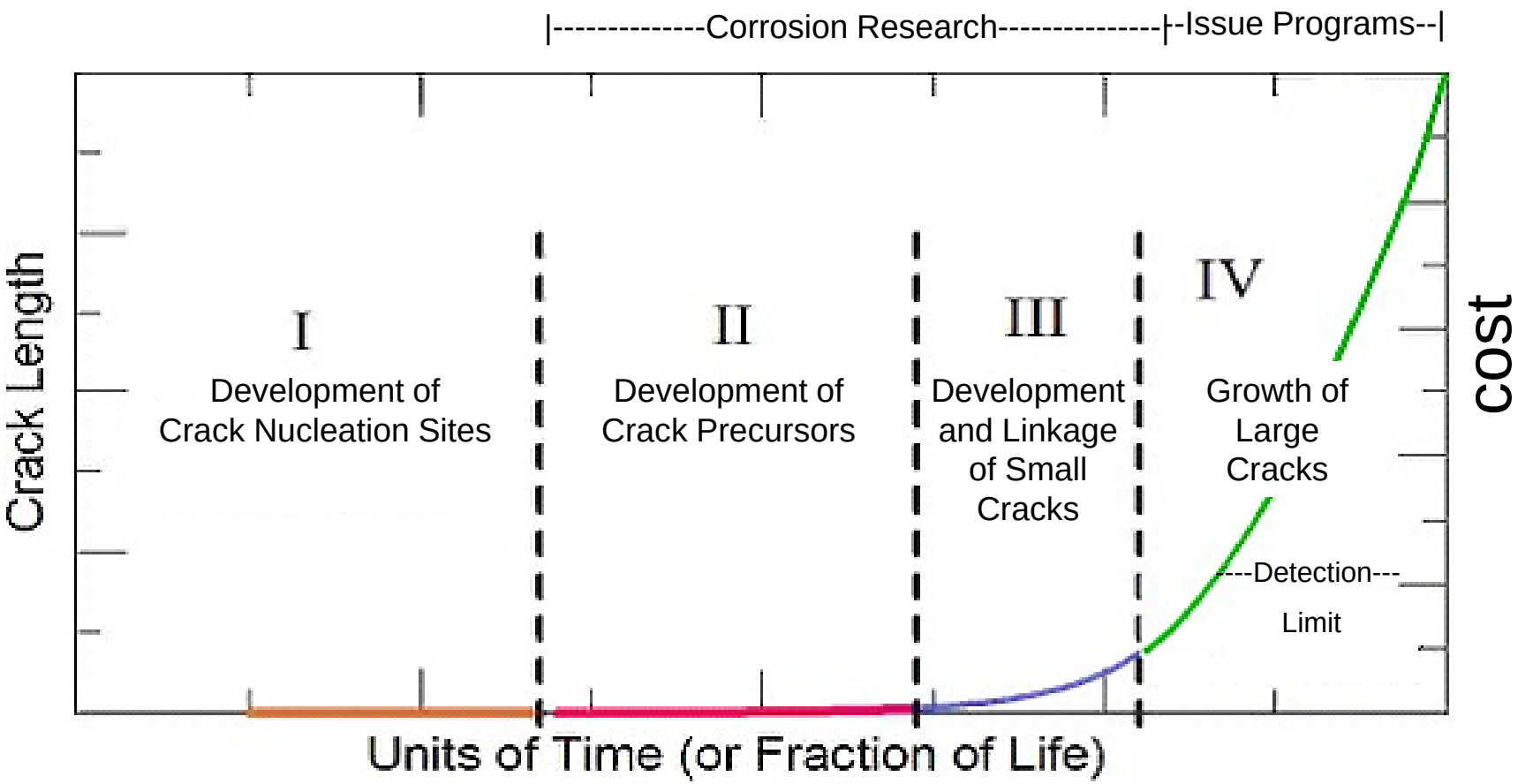

A large fraction of component life is spent in Stages I-III

© 2012 Electric Power Research Institute, Inc. All rights reserved.

ELECTRIC POWER RESEARCH INSTITUTE

Industry Materials Degradation and Issue Management Table Approach

MDM

- **Develop a fundamental understanding of the degradation phenomena/mechanisms**

IMTs

- **Perform operability and safety assessments**
- **Develop Inspection and evaluation guideline**
- **Evaluate available mitigation options**
- **Develop repair & replace options**
- **Monitor and assess plant operation experience**
- **Obtain regulatory acceptance**

Materials Degradation Matrix (MDM) and Issue Management Tables (IMT) are effective materials aging management tools in support of industry's Materials Degradation and Issue Management Initiative

© 2012 Electric Power Research Institute, Inc. All rights reserved.

Materials Degradation Matrix (MDM)

© 2012 Electric Power Research Institute, Inc. All rights reserved.

Materials Degradation Matrix (MDM) Revision 1

- MDM provides a comprehensive listing of potential degradation mechanisms for existing LWR primary system components
- Assesses the extent to which applicable degradation mechanisms are understood
- Evaluates the state of industry knowledge worldwide associated with mitigation of applicable degradation mechanisms
- Documents the results of an expert elicitation process
- Proactively identifies potential challenges to avoid surprises

© 2012 Electric Power Research Institute, Inc. All rights reserved.

MDM Revision 1 Strategic Issues

- Environmental Effects on Fracture Resistance
- Environmental Effects on Fatigue Life
- SCC of Ni-Base Alloys
- SCC of Stainless Steels
- Effect of Fluence on SCC Susceptibility and SCC Crack Growth Rates

NRC PMDA reached the same conclusions

© 2012 Electric Power Research Institute, Inc. All rights reserved.

2010 MDM Revisions

2010 Revisions of the MDM (Rev. 2) address:

- 80-year operations (Long-Term Operations or “LTO”)
- Updates on identifying degradation mechanisms
- Recent operating experience
- Industry progress in addressing LWR materials issues
- Most Gaps revised to keep contents up to date

© 2012 Electric Power Research Institute, Inc. All rights reserved.

Expert Elicitation

- **2010 MDM expert panel meeting held in Feb at EPRI - Palo Alto offices. Focus Included:**
  - Long-Term Operations - "LTO" (*2nd 20-year license renewal term)*
  - Recent research program results

<u>Expert panel</u>:

- Vendors/Industry Experts
  - Scott, Andresen, Sandusky, Fyfitch, Lott, Horn, Lunceford
- Utilities
  - Armson, Covill, Kammerdeiner, Shaw, Whitaker, Wirtz,
- NRC and DOE observers
- EPRI PMs & Contractors (Marks, Eaker)

© 2012 Electric Power Research Institute, Inc. All rights reserved.

Identify Strategic Issues in Materials Degradation

- **Major LTO issues:**
  - Increased EOL Neutron Fluence
    (*RPV integrity, high fluence effects on austenitic SS, expanded regions of neutron effects*)
  - Increased Fatigue Cycles (*with focus on environmental effects*)
  - Late-Life SCC Initiation and Stress Improvement Technique Stability
  - Steam Generator Fouling / Corrosion / Long-Term Management
- **Other major issues:**
  - Effect of environment on fracture properties
  - SCC initiation factors (*cold work, welding effects, PWR system oxygen ingress*)

© 2012 Electric Power Research Institute, Inc. All rights reserved.

Color Chart Presentation of MDM Results

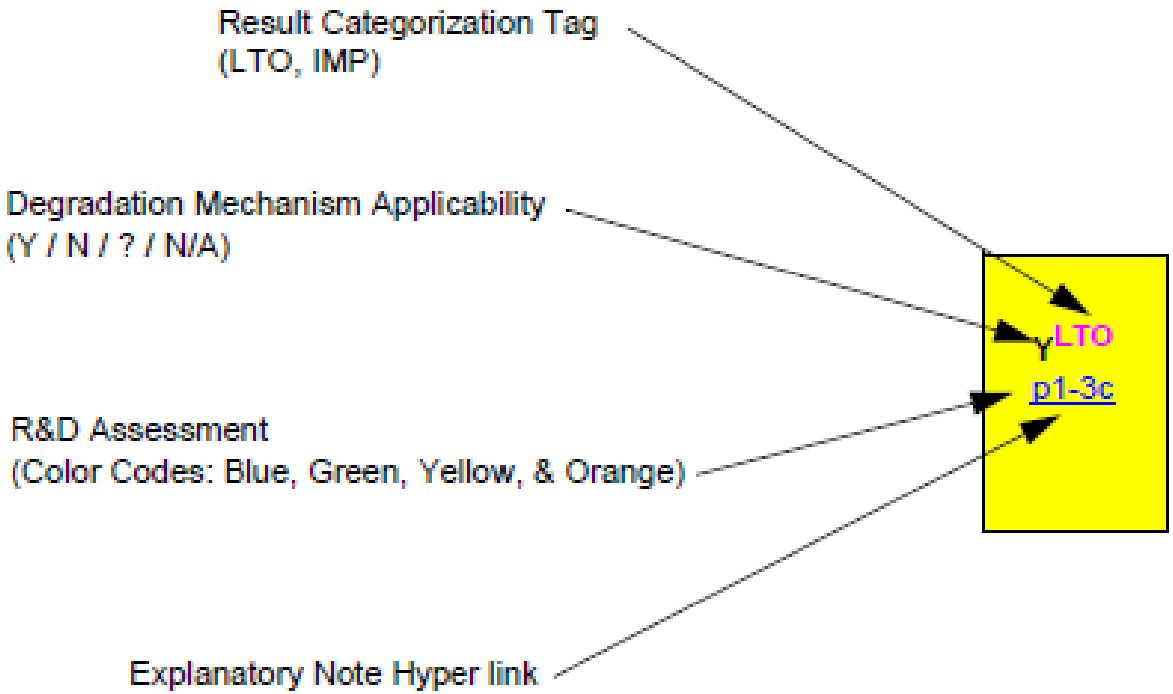

Blue	lack of data to establish degradation applicability
Green	well characterized, little or no additional research is needed
Yellow	ongoing R&D efforts to resolve uncertainties in near-term time frame
Orange	insufficient R&D to resolve uncertainties in a near-term time frame

© 2012 Electric Power Research Institute, Inc. All rights reserved.

MDM Results---- PWR Reactor Internals

Table 3-2 PWR Reactor Vessel Internals

MATERIAL	DEGRADATION MODE													
	SCC		Corrosion				Wear	Fatigue		Reduction in Fract Properties		Irradiation Effects		
	IG/TG	IA	Wstg.	Pitting	FAC	Foul	Wear	HC	LC-Env.	Th.	Env.	Emb.	VS	IC / SR
SS: 300 Series Base Metal	Y LTO p2-1a	Y LTO p2-2a	N	N	N	N	Y IMP p2-7a	Y LTO p2-8a	Y LTO p2-9a	N	Y LTO p2-11a	Y LTO p2-12a	Y LTO p2-13a	Y LTO p2-14a
SS: 300 Series Welds & Clad	Y LTO p2-1b	Y LTO p2-2b	N	N	N	N	N	Y LTO p2-8b	Y LTO p2-9b	Y LTO p2-10b	Y LTO p2-11b	Y LTO p2-12b	Y LTO p2-13b	Y LTO p2-14b
CASS	Y LTO p2-1c	? LTO p2-2c	N	N	N	N	N	Y p2-8c	Y LTO p2-9c	Y IMP p2-10c	Y LTO p2-11c	Y LTO p2-12c	N .	N .
Ni-Alloy: Base Metal (A600)	Y IMP p2-1d	N	N	N	N	N	Y IMP p2-7d	Y p2-8d	Y LTO p2-9d	N	Y p2-11d	N .	N .	N .
Ni-Alloy: X-750	Y LTO p2-1f	? LTO p2-2f	N	N	N	N	Y p2-7f	Y LTO p2-8f	Y LTO p2-9f	N	Y LTO p2-11f	? LTO p2-12f	N .	N .
SS: Precip. Hardened (A-286)	Y LTO p2-1g	Y LTO p2-2g	N	N	N	N	Y LTO p2-7g	Y LTO p2-8g	Y LTO p2-9g	Y LTO p2-10g	? LTO p2-11g	Y LTO p2-12g	N	Y LTO p2-14g
SS: Martensitic	Y LTO p2-1h	N	N	N	N	N	Y p2-7h	Y p2-8h	Y LTO p2-9h	Y LTO p2-10h	? p2-11h	N	N	N

© 2012 Electric Power Research Institute, Inc. All rights reserved.

MDM Results for PWR: – Neutron Irradiation Effects

Low Alloy Steels

2008	2010	LTO
Irradiation embrittlement	Irradiation embrittlement	Irradiation embrittlement

Austenitic Stainless Steels

2008	2010	LTO
–IASCC –Irradiation embrittlement –Void swelling	–IASCC –Irradiation embrittlement –Void swelling	–IASCC –Irradiation embrittlement –Void swelling

High Strength Stainless Steels and Alloy X-750

	2008	2010	LTO
A-286	–IASCC –Irradiation embrittlement	–IASCC –Irradiation embrittlement	–IASCC –Irradiation embrittlement
X-750			–IASCC –Irradiation embrittlement

© 2012 Electric Power Research Institute, Inc. All rights reserved.

MDM Results for PWR: – Environmental Effects on Fatigue Life and Fracture Toughness, Thermal Aging

Environmental Effects on Fatigue Life

2008	2010	LTO
Environmental fatigue	Environmental fatigue	Environmental fatigue

Embrittlement due to Thermal Aging

Materials	2008	2010	LTO
690/52/152	Thermal aging	Thermal aging	
CASS	Thermal aging	Thermal aging	

Environmental Effects on Fracture Property

Materials	2008	2010	LTO
SS Base Metal	Loss Fracture Resistance	Loss Fracture Resistance	Loss Fracture Resistance
SS Weld & Clad	Loss Fracture Resistance	Loss Fracture Resistance	Loss Fracture Resistance
CASS	Loss Fracture Resistance	Loss Fracture Resistance	Loss Fracture Resistance
Ni-Alloys	Loss Fracture Resistance	Loss Fracture Resistance	

© 2012 Electric Power Research Institute, Inc. All rights reserved.

New LTO-related DM Gaps

P-DM-13 – Late Life SCC Initiation

- Deterioration of the surface condition could lead to crack initiation at progressively lower levels of stress intensity
- Aging may be metallurgical in origin and/or due to some slow accumulation of a degrading environmental reaction
- Cold worked layers are of higher concern (lower SCC margins)

P-DM-14 – Long Term Stress Stability

- Techniques relying on a thin layer of surface stress improvement may not remain effective for LTO
- Techniques developed and qualified outside the context of 80-year operations
- Improved understanding of surface stress improvement longevity needed

P-DM-15 – Thermal Aging of Martensitic SS / Influence on SCC

- Existing data is somewhat limited
- LTO may introduce additional thermal embrittlement

© 2012 Electric Power Research Institute, Inc. All rights reserved.

MDM Results---- BWR Reactor Internals

Table 4-2 BWR Reactor Vessel Internals

MATERIAL	DEGRADATION MODE													
	SCC		Corrosion				Wear	Fatigue		Reduction in Fract Properties		Irradiation Effects		
	IG/TG	IA	Wstg.	Pitting	FAC	Foul	Wear	HC	LC-Env.	Th.	Env.	Emb.	VS	IC / SR
SS: Wrought / Forged	Y LTO b2-1a	Y LTO b2-2a	N	N	N	Y b2-6a	Y IMP b2-7a	Y IMP b2-8a	Y LTO b2-9a	N	Y LTO b2-11a	Y LTO b2-12a	N	Y IMP b2-14a
SS: Welds & Clad	Y LTO b2-1b	Y LTO b2-2b	N	N	N	Y b2-6b	Y IMP b2-7b	Y IMP b2-8b	Y LTO b2-9b	Y b2-10b	? LTO b2-11b	Y LTO b2-12b	N	Y b2-14b
CASS	Y LTO b2-1c	Y LTO b2-2c	N	N	N	N	N	Y IMP b2-8c	Y LTO b2-9c	Y IMP b2-10c	? LTO b2-11c	Y LTO b2-12c	N	N
Ni-Alloy: Wrought (A600)	Y LTO b2-1d	N	N	N	N	N	N	Y IMP b2-8d	Y LTO b2-9d	N	Y b2-11d	N	N	N
Ni-Alloy: Welds & Clad (A82/182)	Y LTO b2-1e	N LTO	N	N	N	N	N	Y IMP b2-8e	Y LTO b2-9e	N	Y LTO b2-11e	N	N	N
X-750	Y LTO b2-1f	Y LTO b2-2f	N	N	N	N	N	Y IMP b2-8f	Y LTO b2-9f	N	Y LTO b2-11f	Y LTO b2-12f	N	Y LTO b2-14f
XM-19	Y LTO b2-1g	Y LTO b2-2g	N	N	N	N	N	Y IMP b2-8g	Y LTO b2-9g	N	? LTO b2-11g	Y LTO b2-12g	N	Y LTO b2-14g

© 2012 Electric Power Research Institute, Inc. All rights reserved.

MDM Results for BWR: – SCC & Neutron Irradiation Effects

SCC of Low Alloy RPV Steels

2008	2010	LTO
IG/TG	IG/TG	IG/TG

SCC of Austenitic Stainless Steels

2008	2010	LTO
IG/TG	IG/TG	IG/TG

Irradiation effects on Low Alloy Steels

2008	2010	LTO
IASCC	IASCC	IASCC
Irradiation embrittlement	Irradiation embrittlement	Irradiation embrittlement

Irradiation effects on Austenitic Stainless Steels

2008	2010	LTO
IASCC	IASCC	IASCC
Irradiation embrittlement	Irradiation embrittlement	Irradiation embrittlement

Irradiation effects on X-750 & X-19 (High Strength)

2008	2010	LTO
IASCC	IASCC	IASCC
Irradiation embrittlement	Irradiation embrittlement	Irradiation embrittlement

© 2012 Electric Power Research Institute, Inc. All rights reserved.

MDM Results for BWR: – Fatigue & Fracture Toughness

Fatigue

Environmental Effects on Fatigue Life

2008	2010	LTO
Lo-C Env.	Lo-C Env.	Lo-C Env.

High-C Thermal Fatigue of BWR Piping

2008	2010	LTO
Hi-C Fat.	Hi-C Fat.^{IMP}	

Reduction in Fracture Properties

Thermal Aging of CASS

2008	2010	LTO
Thermal aging	Thermal aging	

Environmental effects on Fracture Toughness

	2008	2010	LTO
SS	RiFP-Env	RiFP-Env	RiFP-Env
Ni-Alloys	RiFP-Env	RiFP-Env	

© 2012 Electric Power Research Institute, Inc. All rights reserved.

EPRI ELECTRIC POWER RESEARCH INSTITUTE

Issue
Management Tables

© 2012 Electric Power Research Institute, Inc. All rights reserved.

Issue Management Table(s)

- IMT Scope
  - Long-lived passive components in the reactor coolant systems of both PWR and BWR plants
    - BWR recirculation piping
    - BWR reactor vessel internals
    - BWR reactor vessel
    - PWR reactor vessel internals
    - PWR reactor coolant system piping (to 1st isolation valve)
    - PWR reactor pressure vessel
    - PWR pressurizer vessel
    - PWR steam generator vessel and internals including tubes
    - PWR/BWR fuel

© 2012 Electric Power Research Institute, Inc. All rights reserved.

Issue Management Table(s)

- Failure Consequences Evaluation Basis
  - Component failures considered in the IMT may be beyond current design or licensing basis. All reasonably postulated events will be considered, solely to establish relative importance of postulated failures. No new design bases will be implied by the failures considered.
- An adverse consequence is failure of a component that results in one or more of the following:
  - Inability to come to safe shutdown
  - Precludes maintenance of coolable core geometry
  - Loss of core cooling effectiveness
  - Loss of reactivity control
  - Reduction/elimination of critical Instrumentation availability
  - Causes a design basis accident
  - Significant economic impact
  - Significant on-site/off-site radiation release
  - Jeopardy to personnel safety
  - Breach of the reactor coolant system pressure boundary
  - Breach of the fuel cladding

© 2012 Electric Power Research Institute, Inc. All rights reserved.

Example IMT – PWR

Table A-1
Issue Management Table: PWR Reactor Pressure Vessel

Component & ID No.	Material	Degradation Mechanism[1]	Conseq. of Failure	Mitigation[2]	Repair / Replace	I & E Guidance	Gaps
1.1 Upper Shell Assembly							
1.1-1 Upper Shell Flange (Vessel Flange)	C&LAS/ SS Clad *(SA-336 or A/SA-508, Cl 2 or 3)*	SCC: IG, IA, TG, LTCP, PW C&W: Wstg, Wear Fat: LC/Th, Env RiT: Th, Emb, Fl	A, B, E, F, G	**Water Chemistry** TR-105714, *Primary Water Chemistry*	**ASME Sect. XI** IWA-4000	**Boric Acid Corrosion Control** EPRI: 1000975, *BAC Handbook* Vendor: WCAP-15988-NP, *BAC Prog.* NRC: GL 88-05 **LC / Env. Fatigue Management** EPRI: MRP-148, *Fatigue Mgmnt.* MRP-149, *Lic. Basis Mon.* MRP-47, *Fatigue Env. Effects* NRC: GALL X.M1, *Fatigue Mon.* NUREGs 6260 & 6583 **ASME Code Sect. XI** IWB-2500-1: *B-A (Vol)–R.G. 1.150* *B-P (VT-2)*	DM-01 DM-02 AS-02 AS-27

© 2012 Electric Power Research Institute, Inc. All rights reserved.

Example Gap Description – PWR

Table 3-2
Degradation Mechanism Understanding Gaps

R&D Gap Description	Applicable Components
DM-01 - Environmentally Assisted Cracking: LAS Develop an improved understanding regarding the potential for environmentally assisted cracking of clad LAS materials (IGSCC, TGSCC, PWSCC) in the primary water environment. Some of the concern is related to cracking of LAS materials exposed to the CANDU reactor heavy water environment, but to date there have been no documented instances of environmentally assisted cracking of any domestic PWR. Currently, there is wide scatter in the laboratory data for stress corrosion crack propagation in low alloy steels, likely due to differences in the experiment assumptions and structure. Basis: MDM: e002, e003 EPRI: TR-103160 (BWR Environment), NP-7473-L, TR-102796, TR-102692	RESULTS DATA: Priority: LOW Resp. Program: To be determined per NEI 03-08 Summary Level Applicability: RPV Pressurizer SG Shell ASME Class 1 Ppg., Vlvs., Fittings

© 2012 Electric Power Research Institute, Inc. All rights reserved.

Example IMT – BWR

Table A-2 (continued)
Reactor Vessel Internals

Component & ID No.	Material	Degradation Mechanism[1]	Conseq. of Failure	Mitigation[2]	Repair / Replace	I & E Guidance	Gaps & Priority
2.9 Shroud							
2.9–1 Shroud Cylinders *(Includes Welds H1–H7 and Shroud Vertical Welds)*	SS *(304, 304L)*	IGSCC *(e103)* IASCC / Neutron Emb. *(e045, e116)* TGSCC *(e104)* Env. Fatigue *(e014)*	Loss of Support / Orientation Loss of Flow Distribution	**Chemistry Control** BWRVIP–130 *(BWRVIP 2005–168)* **HWC / NMCA** BWRVIP–62 *(Some locations not mitigated by HWC / NMCA)*	**EPRI BWRVIP** BWRVIP–02–A *(RDC)*	**EPRI BWRVIP** BWRVIP–76	DM-02: *SCC of "Resistant" SS* AS-01: *RAMA Code* AS-09: *Fluence Impact on CGR/Fract Tough* AS-10: *HWC / NMCA Impact on CGRs* AS-11: *Assess Fast Reactor Data* AS-14: *Fat. Environ. Eff.* MT-01: *Alt. Mitigation Technology* MT-02: *ECP Model* MT-03: *High Fluence Eff. on NMCA / HWC* MT-04: *On-Line NMCA* MT-05: *Startup & Shutdown Chem.* MT-06: *NMCA Durab. & Long Term Effect* RR-02: *Weld Process for Irrad. Matl*

© 2012 Electric Power Research Institute, Inc. All rights reserved.

Example Gap Description – BWR

AS-09 - Assess Impact of High Fluence & NMCA/HWC on CGRs & Fracture Toughness BWRVIP-99 provides correlations to determine the crack growth rates for irradiated stainless steel. Data used to develop these crack growth rate correlations for irradiated stainless steels is based on research conducted prior to the early 1990's. There are gaps in the data. In some cases it is not possible to determine if the correlations are overly conservative or non-conservative. As BWR internals continue to accumulate radiation damage, data at high fluence is needed to ensure that the predictions are appropriate and accurate for structural integrity assessments. Without this information, NRC may impose very conservative criteria for evaluation of flaws which can result in premature installation of repairs. Furthermore, the effect of HWC / NMCA on crack growth rates at high fluences (>$3x10^{20}$ n/cm^2) are not well understood because of limited data. Additional investigations and data are needed to better understand the effect of high fluence and HWC / NMCA on crack growth rates. The NRC SER on the BWRVIP-14 crack growth model limits its application to a fluence of < $5x10^{20}$ n/cm^2. H4 welds in some plants will exceed this limit before end of life. Additional data is needed to demonstrate that HWC or NMCA will effectively mitigate cracking in highly irradiated material. In the absence of additional data, the NRC may not allow inspection relief for highly irradiated welds which are currently not covered by BWRVIP-62. Ongoing work to resolve this gap includes crack growth rate and fracture toughness tests performed under both NWC and HWC conditions. Post test fractography will be conducted to determine the fracture mode. Microstructure and micro-chemical evaluation will be performed to analyze grain boundary profiles and chemical compositions. Basis: BWRVIP: BWRVIP-62, BWRVIP-99, BWRVIP-14, 2006 Work Plan (Tasks 2.9 & 2.10) MDM: e045	RESULTS DATA: Priority: HIGH Resp. Program BWRVIP Assessment BWRVIP Mitigation Summary Level Applicability: RVI (A-2)

© 2012 Electric Power Research Institute, Inc. All rights reserved.

Primary Systems Corrosion Research 2009-10 Research Projects

Task	Title	PWR IMT Gaps	BWRVIP IMT Gaps
1	IASCC Research	P-IE-06 P-AS-14	B-AS-09/10
2	IASCC-CIR II Extension	IE-06, AS-14 P-AS-33	B-AS-09 B-AS-11
3	Crack Initiation and Propagation Studies	AS-09/12/14 AS-11/19/20 P-DM-02	B-AS-09/10 B-AS-26/27 B-DM-02/03
4	Nano Scale Characterization to Define Crack Initiation Mechanisms	AS-09/12/14 AS-19	B-AS-09/27 B-DM-02
5	EAC initiation and short crack studies	AS-09/12/14 AS-11/19/20	B-AS-09/10 B-AS-26/27 B-DM-02
6	Localized deformation/EAC Mechanism	P-AS-14	B-AS-09/27 B-DM-02
7	Material Information Portal, Revision of MDM, Materials Handbook	IMT	IMT
8	Effect of LWR Environments on Fracture Resistance	P-DM-09	B-AS-09 B-DM-06
9	SCC Susceptibility Ni Alloys Welds in BWR-HWC		B-AS-10 B-DM-02
10	Effect of inhomogeneous microstructures and deformation on SCC of A690	P-AS-12 P-DM-09	
11	Localized deformation/EAC IASCC follow on work (FY2010)	P-AS-14	B-AS-09/27 B-DM-02
12	Alloy 690 SCC Initiation Studies in Super-Critical Water (FY2010)	P-AS-12 P-DM-09	

© 2012 Electric Power Research Institute, Inc. All rights reserved.

PWR IMT Gaps

High-Priority Gaps		Medium-Priority Gaps		Low-Priority Gaps	
P-I&E-06	I&E Guidance for Reactor Internals	P-RG-04	NRC Rulemaking on ASME CC-N-729 R1	P-AS-06	Pressurized Thermal Shock Re-Evaluation
P-I&E-02	NDE Qualification for Ni-Alloy Penetrations	P-RG-06	NDE Qualification for RI Inspection	P-I&E-14	NDE for Examination of Hidden Welds
P-I&E-01	NDE Technology for DM Butt Welds	P-AS-22	SG Tubes & Internals Wear & HCF (fatigue)	P-AS-33	Fast Reactor Data Applicability to PWR Enviro.
P-I&E-21	Reactor Internals Generic Acceptance Criteria	P-I&E-13	NDE for Sizing SG Tubing ODSCC Indications	P-MT-07	SG Startup Chem. Excursions after SG Replac
P-AS-13	Ther+ Irra. Syn. Effects on CASS & SS Welds	P-I&E-04	I&E Guidance for Bottom Mounted Nozzles	P-DM-11	SCC (and Thermal Aging) of CASS Componen
P-AS-27	Alternative ASME Section XI Appendix G	P-I&E-16	Steam Generator Tubing Integrity NDE Tools	P-RR-06	Repair Guidelines for Reactor Internals
P-MT-03	PWSCC Mitigation of DM Welds via SI	P-AS-19	PWSCC Management for Ni-Alloy RI	P-AS-32	Evaluation for Non-Tubing / Non- DP A600
P-AS-09	SCC of SSs Exposed to Primary Water	P-MT-02	PWSCC Mitigation of A600 Penetrations via SI	P-AS-24	Denting & SCC in SG Top of Tubesheet (TTS)
P-AS-14	Fluence Impact on SCC of Stainless Steels	P-MT-06	SG Secondary Water Chemistry Technologies	P-AS-36	Outstanding Issues of HCF of Class 1 Piping
P-I&E-11	NDE Accessibility Evaluation for RI	P-I&E-15	SG Tubing Eddy Current Tech. Improvements	P-DM-02	Low Temperature Crack Propagation
P-I&E-12	NDE for Volumetric Examination of CASS	P-AS-20	PWSCC of Therm. Treated A600 SG Tubing	P-I&E-19	NDE for Implementation of Section XI Radiogr
P-MT-01	PWSCC Mitigation via Water Chemistry	P-AS-15	Swelling & Stress Relaxation Significance: RI	P-RR-03	Welding Processes for Repair of Irra. Material
P-AS-26	SG Tube Damage - Loose Parts or Foreign	P-I&E-05	I&E Guidance for A600 “Orphan” Locations	P-DM-12	Fastener SCC Susceptibility-Long-Term Aging
P-AS-17	Flow-induced Vibration and Wear of RI	P-I&E-08	NDE for Baffle & Former Assy IASCC	P-RR-08	Alternate Materials for RI Repair/Repl (Bolting)
P-I&E-07	NDE Qualification for RI Bolting	P-RG-05	ASME Sect. XI, Appendix VIII Sizing Criteria	P-DM-10	Thermal Embrittlement of Carbon and LAS
P-AS-31	Significance of Cracks in SI Divider Plate	P-MT-04	SG Tubing ODSCC Mitig via Water Chemistry	P-MT-08	Steam Generator Hideout Return Evaluation
P-RG-09	Pipe Rupture Probability re-assess. (xLPR)	P-AS-16	Fatigue Environmental Effects in RI	P-AS-25	SG Flow-Accelerated Corrosion Assessment
P-AS-12	PWSCC Improvement for Alloys 690/52/152	P-RR-05	SG TT-Tubing SCC Alternate Repair Criteria	P-AS-04	Irradiation Embrittlement of Clad LAS
P-AS-02	Env. Fatigue for Press. Bound. Components	P-AS-11	PWSCC CGR for Alloys 600, 82, and 182	P-RR-04	Improved Weld Overlay Process and Materials
P-MT-05	SG Off-Line Chemical Treatment Options	P-DM-09	Environmental Effects on Fracture Resistance	P-RG-02	LR for Thermal Embrittlement of CASS Piping
P-AS-30	ODSCC of TT A 600 and 690 SG Tubing	P-I&E-09	NDE Capability Void Swelling	P-DM-05	Thermal Embrittlement of Alloy 690/52/152
P-I&E-17	NDE Qualification for Weld Overlay Exam.	P-RG-07	SG Operational Leakage to Accident Leakage	P-RR-07	Repair Guidelines for Penetrations
P-AS-01	Boric Acid Corrosion of Carbon and LAS	P-RG-08	SG Eddy Current Noise Meas. & Monitoring		
P-I&E-03	NDE Technology for J-Groove Weld Locations	P-AS-05	Fluence Spectra Effects--LAS RPV Materials		
P-AS-34	SG Tubing Improved Leak Rate Modeling	P-AS-28	Neutron Embr. of Nozz Forgs and Upper Shell		
P-I&E-20	SG Foreign Object Detection and Evaluation	P-AS-35	SG Sludge Deposits and Scale Buildup		
		P-RG-04	NRC Rulemaking on ASME CC-N-729 R1		
		P-RG-06	NDE Qualification for RI Inspection		

© 2012 Electric Power Research Institute, Inc. All rights reserved.

BWRVIP IMT Gaps

High-Priority Gaps		Medium-Priority Gaps		Low-Priority Gaps	
B-AS-09	Assess Impact of High Fluence (and HWC / NMCA) on Fracture Tough & SCC	**B-RG-05**	Evaluation of EVT-1	**B-I&E-05**	NDE Capability: Appendix VIII Compliance
B-AS-18	Jet Pump Degradation Management	**B-AS-27**	A182 / Creviced A600 SCC Susceptibility	**B-AS-14**	Fatigue Environ. Effects: Reactor Internals
B-I&E-07	NDE Capability: RPV Drain Line	**B-AS-28**	Assess Impact of BWR Nozzle Penetrations on Pres-Temp Limit Curves	**B-AS-11**	Assess Fast Reactor Data Applicability to BWR Environment
B-AS-10	Assess the Impact of NMCA & HWC on SCC Crack Growth Rates	**B-MT-01**	Dev't of Alternate Mitigation Technologies	**B-AS-19**	Assess In-Vessel Fastener Loosening
B-AS-17	Evaluate Hidden Weld Locations (Thermal Sleeves & Internals Piping)	**B-MT-04**	NMCA Technology Improvement	**B-AS-22**	High-Cycle Thermal Fatigue: Piping Locations
B-MT-02	Demonstrate Improved ECP Model	**B-AS-13**	Assess the Impact of High Fluence on Nickel Base Alloys	**B-I&E-08**	Develop Inspection & Evaluation Guidance for Repairs
B-MT-05	Startup & Shutdown Chemistry	**B-I&E-02**	NDE Capability: Hidden Locations (Thermal Sleeves & Internals Piping)	**B-DM-01**	Environmentally Assisted Cracking: LAS
B-RR-06	Develop Repair Solutions for Bottom Head Drain Line Locations	**B-RR-09**	Develop Improved Jet Pump Restrainer Bracket Design	**B-I&E-06**	NDE Capability for CASS Weldments
B-AS-26	Assess Alloy X-750 SCC Susceptibility	**B-AS-05**	Assess Fluence Spectra Effects on Embrittlement of C&LAS	**B-RG-01**	IGSCC & HC Thermal Fatigue of Small Bore Piping
B-MT-06	NMCA Durability & Long-Term Effectiveness	**B-DM-02**	SCC of "Resistant" Stainless Steel Materials	**B-AS-12**	Thermal & Irradiation Embrittlement: Synergistic Effects (on CASS BWR RI)
B-I&E-03	NDE Capability: Shroud & Shroud Support Locations	**B-AS-07**	Environmental Fatigue Issues: Pressure Boundary Components	**B-DM-03**	Low Temperature Crack Propagation
New	***Steam Dryer evaluation Methodology***	**B-I&E-01**	NDE Capability: Core Plate Rim Hold Down Bolts	**B-I&E-09**	Techniques for Detection of Stress Relaxation in RI Components
B-DM-06	Environmental Effects on Fracture Resistance	**B-AS-15**	High Cycle Fatigue: Reactor Internals		
B-RR-02	Develop Welding Processes for Repair of Irradiated Material	**B-RR-05**	Develop Alternate High Strength Materials		
		B-RG-06	Reactor Internals NDE Qualification		
		B-RR-08	Availability of Laser Welding for Repairs to Highly Irradiated Components		
		B-AS-20	Assess Non-Safety Locations		

© 2012 Electric Power Research Institute, Inc. All rights reserved.

Summary

- MDM Revision-2 has updated the understanding of the potential materials degradation mechanisms for primary circuit components, in the context of 80-year operation
- The identified major LTO degradation mechanisms in primary system materials include: the increased end-of-life neutron fluence, increased fatigue cycles, late-in-life SCC initiation, long-term stress stability, and steam generator fouling/corrosion
- Both PWR and BWR Issue Management Tables (IMTs) have incorporated the MDM results at a component level and from an operational significance perspective
- Additional fundamental work needed

© 2012 Electric Power Research Institute, Inc. All rights reserved.

Publication of EPRI MDM and IMTs

- EPRI MDM Rev-2, EPRI Report # 1020987
- BWR and PWR IMTs have been updated to reflect MDM extension to 80 years
  - BWR-167NP, Rev-2, EPRI Report # 1020995
  - MRP-205, Rev-2, EPRI Report # 1021024
- Available at www.epri.com

Contact: *TG Lian, tlian@epri.com; (650) 855-2405*

Robin Dyle, rdyle@epri.com; (205) 426-5371

© 2012 Electric Power Research Institute, Inc. All rights reserved.

Together…Shaping the Future of Electricity

© 2012 Electric Power Research Institute, Inc. All rights reserved.

ELECTRIC POWER RESEARCH INSTITUTE